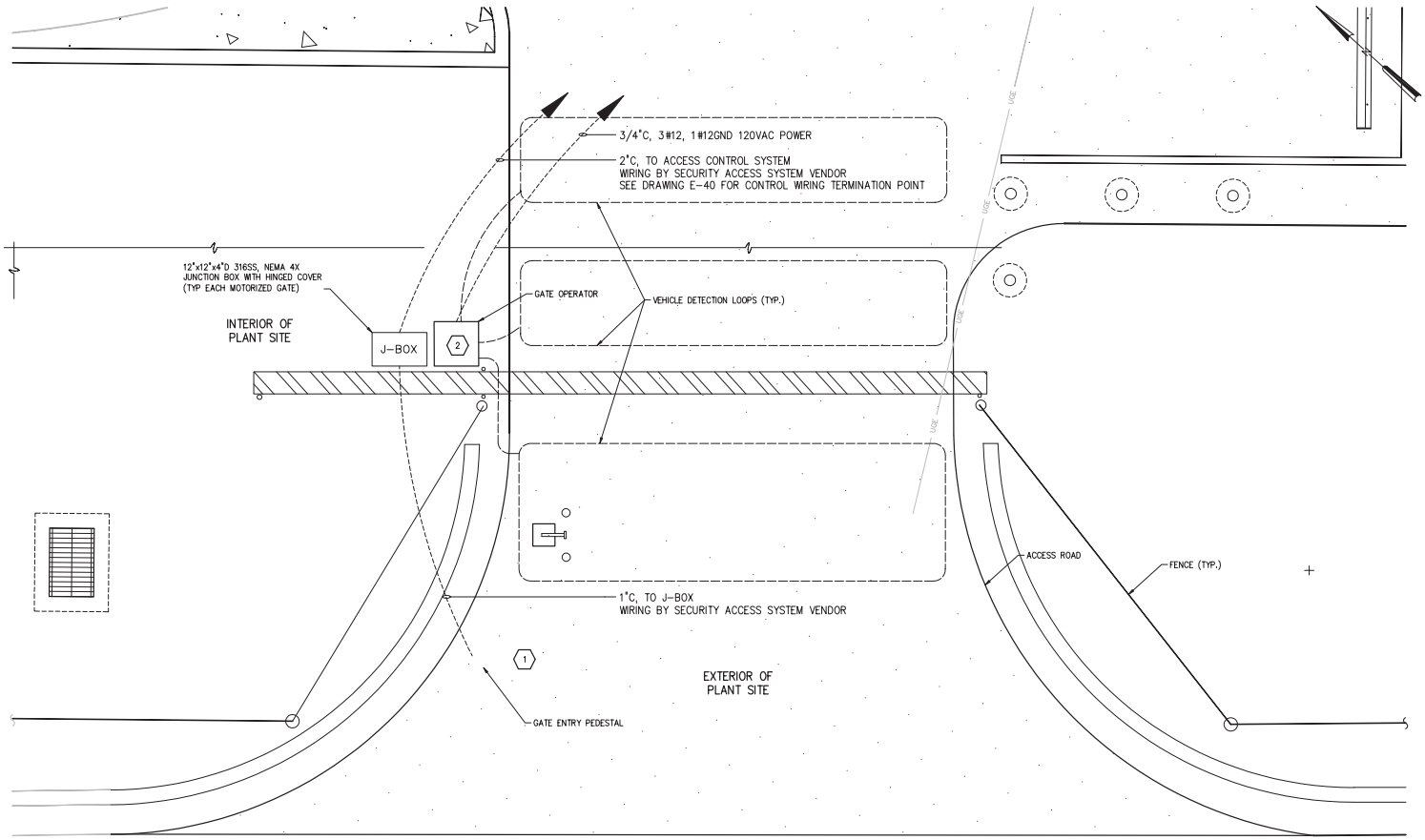

PLAN VIEW
MOTORIZED GATE WITH VEHICLE DETECTION LOOP
NTS

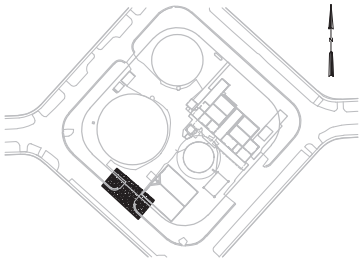

LOCATION MAP

GENERAL NOTES:

1. THIS DRAWING SHOWS MOTORIZED GATE NO. 2. THE VEHICLE DETECTION LOOPS AT OTHER MOTORIZED GATES ARE SIMILAR.
2. APPROXIMATE LOCATIONS OF GATE ACCESS EQUIPMENT IS SHOWN ON DRAWING E-39.

KEYED NOTES:

1. SEE CIVIL DRAWINGS FOR DETAILED LOCATIONS OF GATE ENTRY PEDESTALS AND GATE EXIT PEDESTALS (TYPICAL FOR ALL MOTORIZED GATES).
2. LOCATIONS OF GATE OPERATORS VARY FOR EACH MOTORIZED GATE. SEE CIVIL DRAWINGS FOR PROPOSED GATE OPERATOR LOCATIONS.

NO.	DATE	ISSUED FOR	BY
1	07/24/15	REQUEST FOR PROPOSAL	G.A.B.

DESIGNED G.A.B.
DRAWN G.P.B.
CHECKED J.N.M.
PROJ. ENGR. G.A.B.

JOHN C. BURKE P.E.
No. 17301

HAZEN AND SAWYER
Environmental Engineers & Scientists
4000 Hollywood Boulevard, Suite 750N
Hollywood, Florida 33021
Certificate of Authorization Number: 2771

SCALE NTS

CLIENTS PROJECT: –
ENGINEERS PROJECT: 44238-004
CAD REFERENCE: 44238-004BP3-E22

NORTH MIAMI FLORIDA
CITY OF NORTH MIAMI
PUBLIC WORKS UTILITIES

WINSON WATER TREATMENT PLANT
RELIABILITY IMPROVEMENTS – VOLUME C: WTP REHAB
SECURITY ACCESS
ELECTRICAL DETAILS
SHEET 3

DATE: JULY 2015
SHEET: 261 OF 335
DRAWING: E-22

REQUEST FOR PROPOSAL

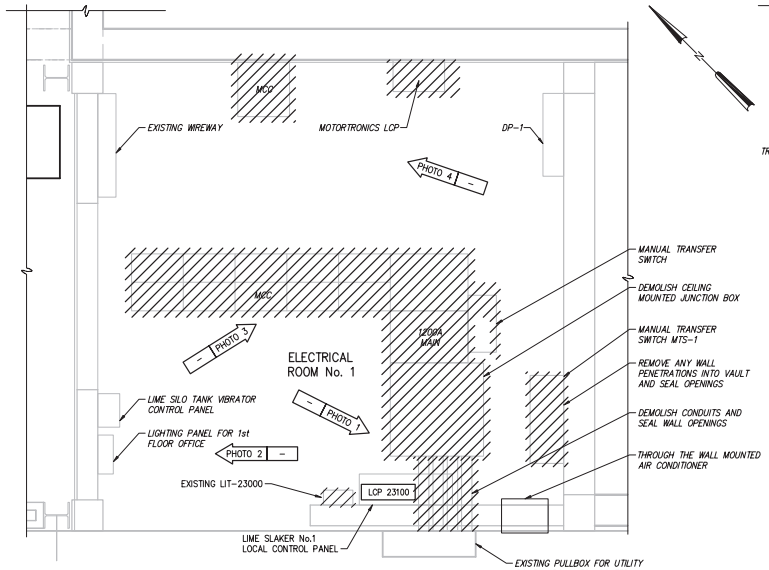

ELECTRIC ROOM DEMOLITION PLAN
1/2" = 1'-0"

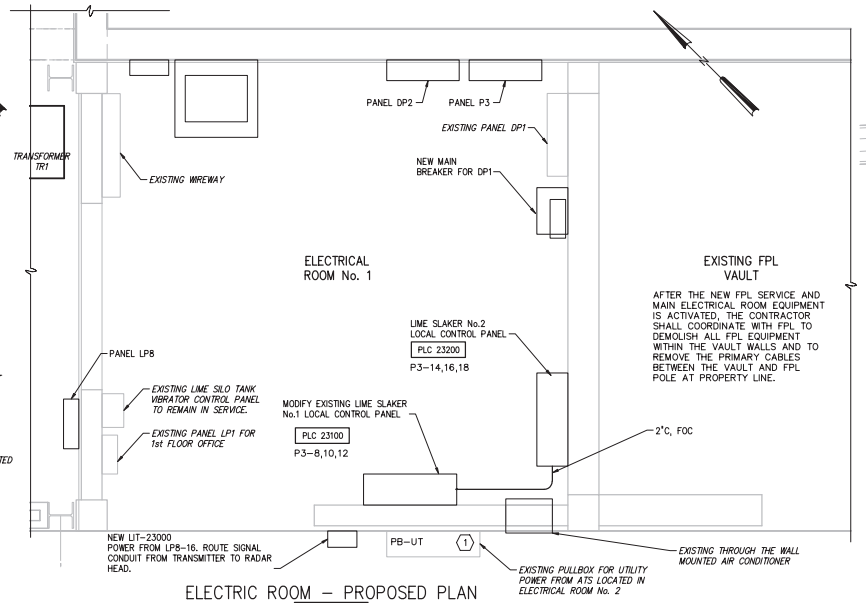

ELECTRIC ROOM – PROPOSED PLAN
1/2" = 1'-0"

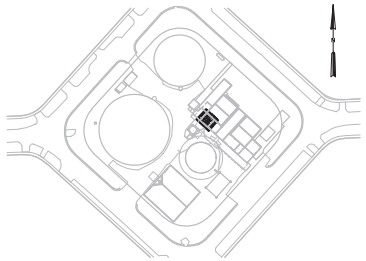

LOCATION MAP

KEYED NOTES:

1. AFTER THE MAIN ELECTRICAL ROOM IS COMPLETED AND ACTIVATED THE CONTRACTOR SHALL REMOVE, AND DELIVER TO THE OWNER, EXISTING WIRING BETWEEN THE EXISTING UTILITY PULL BOX AND THE EXISTING ATS.

   CONTRACTOR SHALL REMOVE CONDUITS BETWEEN THE PULL BOX PB-UT AND EXISTING MAIN ELECTRICAL SWITCHGEAR IN EXISTING ELECTRICAL ROOM 1.

   CONTRACTOR SHALL PLUG ALL OPENINGS IN PULL BOX.

   SEE DRAWING E-24 FOR ADDITIONAL DETAILS.

GENERAL NOTES:

1. LIMITED RECORD DRAWINGS EXIST FOR THIS STRUCTURE AND/OR AREA. PHOTOS PROVIDED FOR GENERAL INFORMATION PURPOSES.
2. THE CONTRACTOR SHALL FIELD VERIFY ALL EXISTING CONDITIONS PRIOR TO BID PER THE REQUIREMENTS OF DIVISION 1 OF THE SPECIFICATIONS.
3. CONTRACTOR RETAINS FULL RESPONSIBILITY FOR FIELD VERIFICATION OF ALL ABOVE GROUND IMPROVEMENTS TO BE REMOVED FOR THIS WORK. SUCH VERIFICATION SHALL INCLUDE: STRUCTURAL, ARCHITECTURAL, HVAC, PLUMBING, ELECTRICAL, IRRIGATION, CONTROLS, FREE STANDING EQUIPMENT, LANDSCAPING, AND ANY AND ALL OTHER EXISTING IMPROVEMENTS WITHIN THE BOUNDARY OF THE WORK WHETHER SHOWN HEREIN OR NOT.
4. FOR BELOW GRADE IMPROVEMENTS TO BE REMOVED REFERENCE APPLICABLE CIVIL AND ELECTRICAL DRAWINGS ACCORDINGLY.
5. REFER TO SPECIFICATION SECTION ENTITLED "DEMOLITION OF EXISTING FACILITIES".
6. PRE-BID ACCESS TO THE SITE SHALL BE COORDINATED BY THE CONTRACTOR UPON REQUEST THROUGH A CONTACT TO BE DETERMINATED AT THE CITY OF NORTH MIAMI.
7. ALL OPEN WALL PENETRATIONS SHALL BE SEALED

LEGEND:

PHOTO # – ARROW INDICATES DIRECTION AND POINT OF VIEW OF PHOTO

EXISTING

PROPOSED

TO BE REMOVED

1/2"=1'-0" 12" 0 1 3'

ELECTRICAL ROOM NO. 1 – PHOTO 1
NTS

ELECTRICAL ROOM NO. 1 – PHOTO 2
NTS

ELECTRICAL ROOM NO. 1 – PHOTO 3
NTS

ELECTRICAL ROOM NO. 1 – PHOTO 4
NTS

NO.	DATE	ISSUED FOR	BY
1	07/24/15	REQUEST FOR PROPOSAL	G.A.B.

DESIGNED J.M.B.
DRAWN G.P.B.
CHECKED J.C.B.
PROJ. ENGR. J.C.B.

JOHN C. BURKE P.E. No. 17301

HAZEN AND SAWYER
Environmental Engineers & Scientists
4000 Hollywood Boulevard, Suite 750N
Hollywood, Florida 33021
Certificate of Authorization Number: 2771

SCALE: AS NOTED

CLIENTS PROJECT: –
ENGINEERS PROJECT: 44238-004
CAD REFERENCE: 44238-004BP3-E23

NORTH MIAMI FLORIDA
CITY OF NORTH MIAMI
PUBLIC WORKS UTILITIES

WINSON WATER TREATMENT PLANT
RELIABILITY IMPROVEMENTS – VOLUME C: WTP REHAB

ELECTRICAL ROOM 1 DEMOLITION AND PROPOSED PLAN

DATE: JULY 2015
SHEET: 262 OF 335
DRAWING: E-23

REQUEST FOR PROPOSAL

PLOT DATE: 7/24/2015 4:37 PM BY: TBOCAS

XREFs= ..\Tblock\44238-004-BP3-TB,..\Base-BP3\S-BP1-Filters-Plan-Bottom-X,..\Base-BP3\M-BP1-Filters-Plan-Bottom-X,H:\44238-004\Drawings\Bid Package 3 - WTP Rehab\Base-BP3\M-BP3-Filters-Plan-Bottom

File = H:\44238-004\Drawings\design build package\volume c - wtp rehab\Bid Package 3 - WTP Rehab\Electrical\44238-004BP3-E23 Saved by tbocas Save date = 5/18/2015 11:14 AM

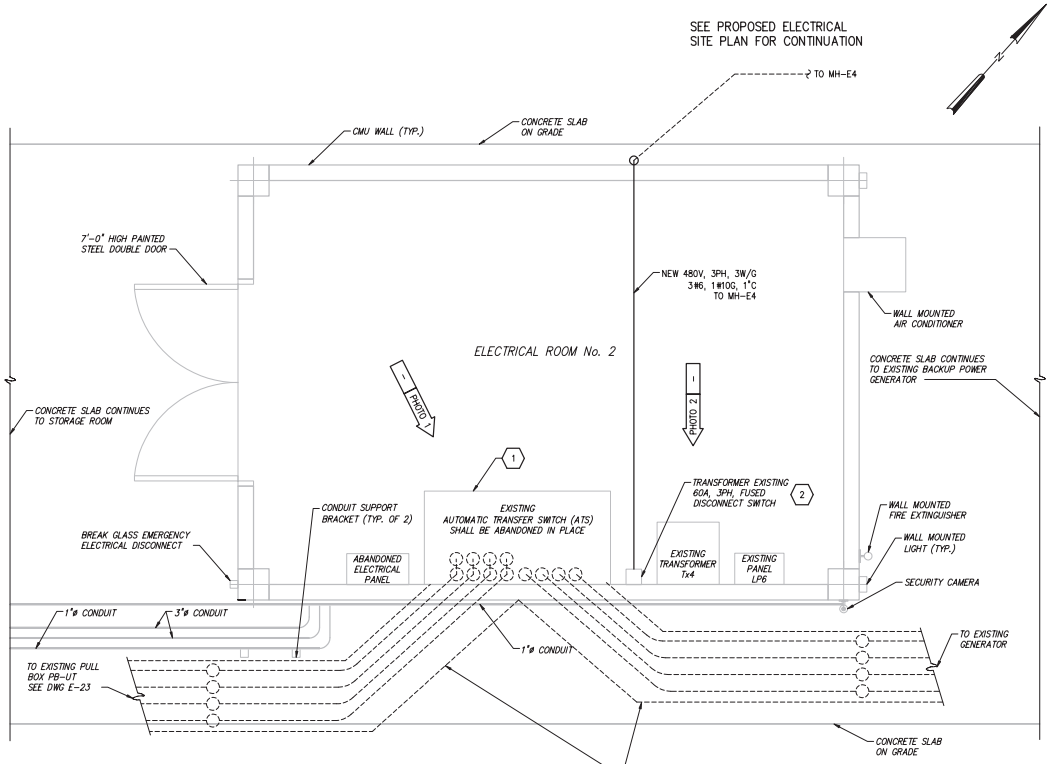

ELECTRICAL ROOM 2
1/2" = 1'-0"

1. EXISTING UNDERGROUND CONCRETE ENCASED DUCT BANKS FOR EXISTING FPL UTILITY POWER AND GENERATOR POWER ROUTINGS.
2. THE WIRING WITHIN THESE CONDUITS SHALL BE DEMOLISHED AT THE APPROPRIATE SEQUENCE OF CONSTRUCTION AFTER NEW ELECTRICAL ROOM HAS BEEN APPROVED AND ACTIVATED.
3. CONDUITS SHALL HAVE NEW PULLING LINES INSTALLED DURING DEMOLITION.
4. CONDUITS SHALL THEN BE SEALED AT EACH END WITH AN EXPANSION TYPE FOAM.

ELECTRICAL ROOM NO. 2 – PHOTO NO. 1
NTS

ELECTRICAL ROOM NO. 2 – PHOTO NO. 2
NTS

GENERAL NOTES:

1. ROOM HEIGHT IS APPROXIMATELY 10'-11".
2. ALL DIMENSIONS ARE APPROXIMATE.
3. NO RECORD DRAWINGS EXIST FOR THIS STRUCTURE AND/OR AREA. PHOTOS PROVIDED FOR GENERAL INFORMATION PURPOSES.
4. THE CONTRACTOR SHALL FIELD VERIFY ALL EXISTING CONDITIONS PRIOR TO BID PER THE REQUIREMENTS OF DIVISION 1 OF THE SPECIFICATIONS.
5. CONTRACTOR RETAINS FULL RESPONSIBILITY FOR FIELD VERIFICATION OF ALL ABOVE GROUND IMPROVEMENTS TO BE REMOVED FOR THIS WORK. SUCH VERIFICATION SHALL INCLUDE: STRUCTURAL, ARCHITECTURAL, HVAC, PLUMBING, ELECTRICAL, IRRIGATION, CONTROLS, FREE STANDING EQUIPMENT, LANDSCAPING, AND ANY AND ALL OTHER EXISTING IMPROVEMENTS WITHIN THE BOUNDARY OF THE WORK WHETHER SHOWN HEREIN OR NOT.
6. FOR BELOW GRADE IMPROVEMENTS TO BE REMOVED REFERENCE APPLICABLE CIVIL AND ELECTRICAL DRAWINGS ACCORDINGLY.
7. REFER TO SPECIFICATION SECTION ENTITLED "DEMOLITION OF EXISTING FACILITIES".
8. PRE-BID ACCESS TO THE SITE SHALL BE COORDINATED BY THE CONTRACTOR UPON REQUEST THROUGH A CONTACT TO BE DETERMINATED AT THE CITY OF NORTH MIAMI.

KEYED NOTES:

1. EXISTING AUTOMATIC TRANSFER SWITCH SHALL BE ABANDONED IN PLACE AFTER THE NEW MAIN ELECTRICAL ROOM HAS BEEN COMPLETED AND ENERGIZED.
2. RE-FEED THE EXISTING TRANSFORMER DISCONNECT SWITCH FROM THE NEW MAIN ELECTRICAL ROOM VIA MH-E4.

LEGEND:

PHOTO # – ARROW INDICATES DIRECTION AND POINT OF VIEW OF PHOTO
EXISTING
PROPOSED

1/2"=1'-0" 12" 0 1 3'

NO.	DATE	ISSUED FOR	BY
1	07/24/15	REQUEST FOR PROPOSAL	G.A.B.

DESIGNED J.M.B.
DRAWN C.A.Z.
CHECKED J.C.B.
PROJ. ENGR. J.C.B.

JOHN C. BURKE P.E.
No. 17301

HAZEN AND SAWYER
Environmental Engineers & Scientists
4000 Hollywood Boulevard, Suite 750N
Hollywood, Florida 33021
Certificate of Authorization Number: 2771

SCALE 1/2"=1'-0"

CLIENTS PROJECT: –
ENGINEERS PROJECT: 44238-004
CAD REFERENCE: 44238-004BP3-E24

NORTH MIAMI FLORIDA
CITY OF NORTH MIAMI
PUBLIC WORKS UTILITIES

WINSON WATER TREATMENT PLANT
RELIABILITY IMPROVEMENTS – VOLUME C: WTP REHAB

ELECTRICAL ROOM 2
EQUIPMENT MODIFICATIONS

DATE: JULY 2015
SHEET: 263 OF 335
DRAWING: E-24

REQUEST FOR PROPOSAL

PLOT DATE: 7/24/2015 4:37 PM BY: TBLOCAS

XREFs= ..\Tblock\44238-004-BP3-TB,..\Base-BP3\S-BP3-ElecRoom2-Plan-X,..\Base-BP3\E-BP3-ElecRoom2-Plan-X,..\Base-BP3\E-BP3-ElectricalRoom2-Plan

File = H:\44238-004\Drawings\design build package\volume c - wtp rehab\Bid Package 3 - WTP Rehab\Electrical\44238-004BP3-E24 Saved by jbroad Save date = 12/26/2013 12:17 PM

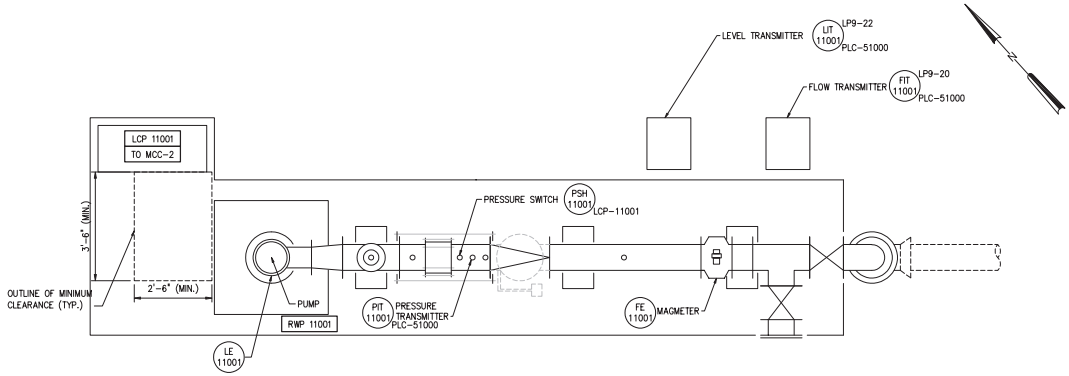

RAW WATER WELL NO. 1 – PLAN
1/2" = 1'-0"

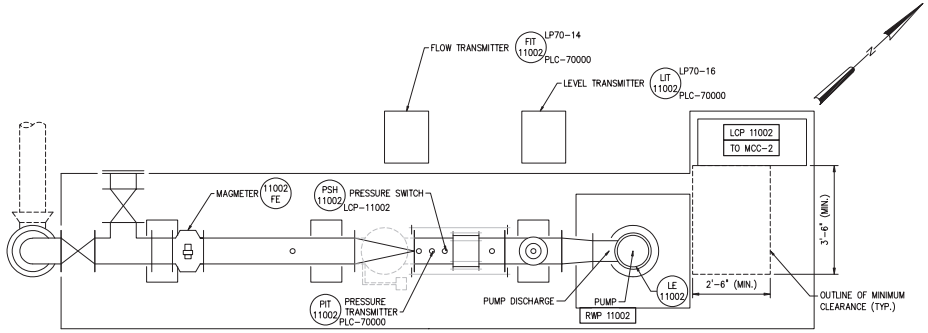

RAW WATER WELL NO. 2 – PLAN
1/2" = 1'-0"

LEGEND

FIT 11001 — POWER SOURCE / LCP OR PLC

1/2"=1'-0" 12" 0 1 3'

REQUEST FOR PROPOSAL

NO.	DATE	ISSUED FOR	BY
1	07/24/15	REQUEST FOR PROPOSAL	G.A.B.

DESIGNED J.M.B.
DRAWN G.P.B.
CHECKED J.C.B.
PROJ. ENGR. J.C.B.

JOHN C. BURKE P.E.
No. 17301

HAZEN AND SAWYER
Environmental Engineers & Scientists
4000 Hollywood Boulevard, Suite 750N
Hollywood, Florida 33021
Certificate of Authorization Number: 2771

SCALE 1/2"=1'-0"

CLIENTS PROJECT: –
ENGINEERS PROJECT: 44238-004
CAD REFERENCE: 44238-004BP3-E25

NORTH MIAMI FLORIDA
CITY OF NORTH MIAMI
PUBLIC WORKS UTILITIES

WINSON WATER TREATMENT PLANT
RELIABILITY IMPROVEMENTS – VOLUME C: WTP REHAB
RAW WATER WELL NOS. 1 AND 2
POWER AND LIGHTING PLAN

DATE: JULY 2015
SHEET: 264 OF 335
DRAWING: E-25

PLOT DATE: 7/24/2015 4:37 PM BY: TBOAS

XREFs= ..\Tblock\44238-004-BP3-TB,..\Base-BP3\M-BP3-WellPumpNo2-Plan,..\Base-BP3\M-BP3-WellPumpNo1-Plan

File = H:\44238-004\Drawings\design build package\volume c - wtp rehab\Bid Package 3 - WTP Rehab\Electrical\44238-004BP3-E25 Saved by HScalll Save date = 6/6/2014 5:28 PM

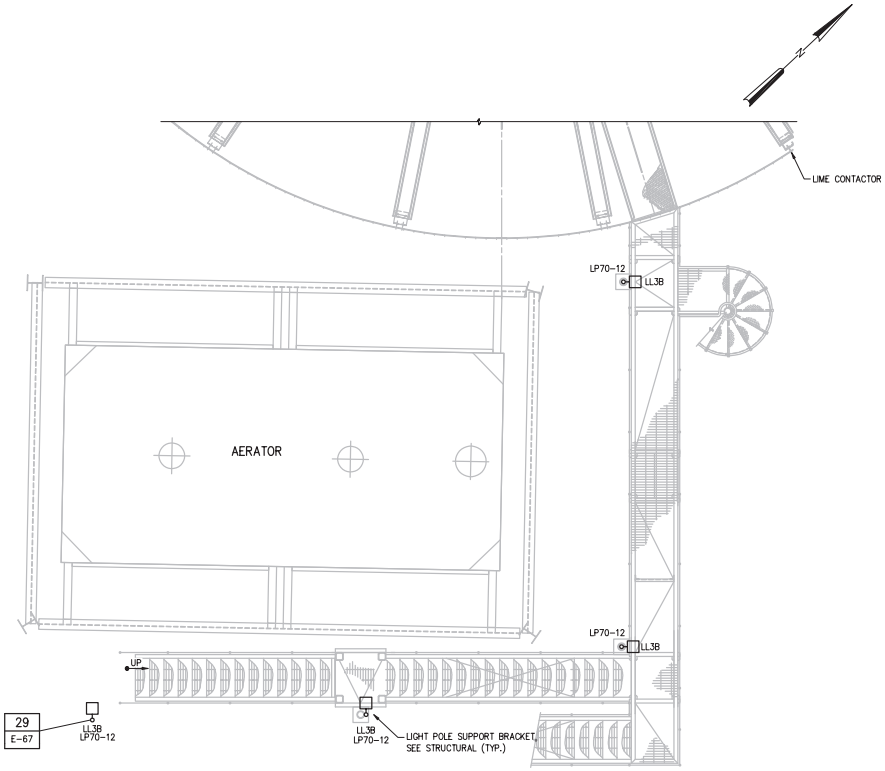

INTERMEDIATE PLAN
1/4"=1'-0"

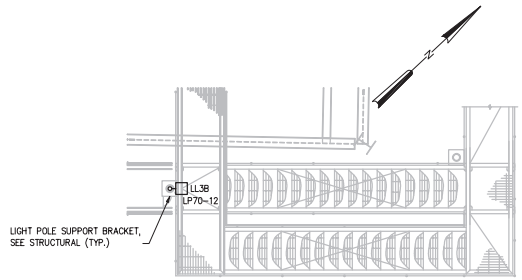

UPPER PLAN
1/4"=1'-0"

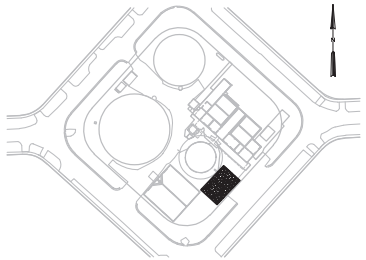

LOCATION MAP

1/4"=1'-0"

NO.	DATE	ISSUED FOR	BY
1	07/24/15	REQUEST FOR PROPOSAL	G.A.B.

DESIGNED J.M.B.
DRAWN G.P.B.
CHECKED J.C.B.
PROJ. ENGR. J.C.B.

JOHN C. BURKE P.E.
No. 17301

HAZEN AND SAWYER
Environmental Engineers & Scientists
4000 Hollywood Boulevard, Suite 750N
Hollywood, Florida 33021
Certificate of Authorization Number: 2771

SCALE 1/4"=1'-0"

CLIENTS PROJECT: –
ENGINEERS PROJECT: 44238-004
CAD REFERENCE: 44238-004BP3-E26

CITY OF NORTH MIAMI
PUBLIC WORKS UTILITIES

WINSON WATER TREATMENT PLANT
RELIABILITY IMPROVEMENTS – VOLUME C: WTP REHAB

AERATOR / LIME CONTACTOR ACCESS STAIRS
POWER AND LIGHTING PLAN

DATE: JULY 2015
SHEET: 265 OF 335
DRAWING: E-26

REQUEST FOR PROPOSAL

PLOT DATE: 7/24/2015 4:37 PM BY: TBOCAS

XREFs= ..\Tblock\44238-004-BP3-TB,..\Base-BP3\S-BP3-AeratorLime Access-Plan

File = H:\44238-004\Drawings\design build package\volume c - wtp rehab\Bid Package 3 - WTP Rehab\Electrical\44238-004BP3-E26 Saved by HScall1 Save date = 6/6/2014 5:28 PM

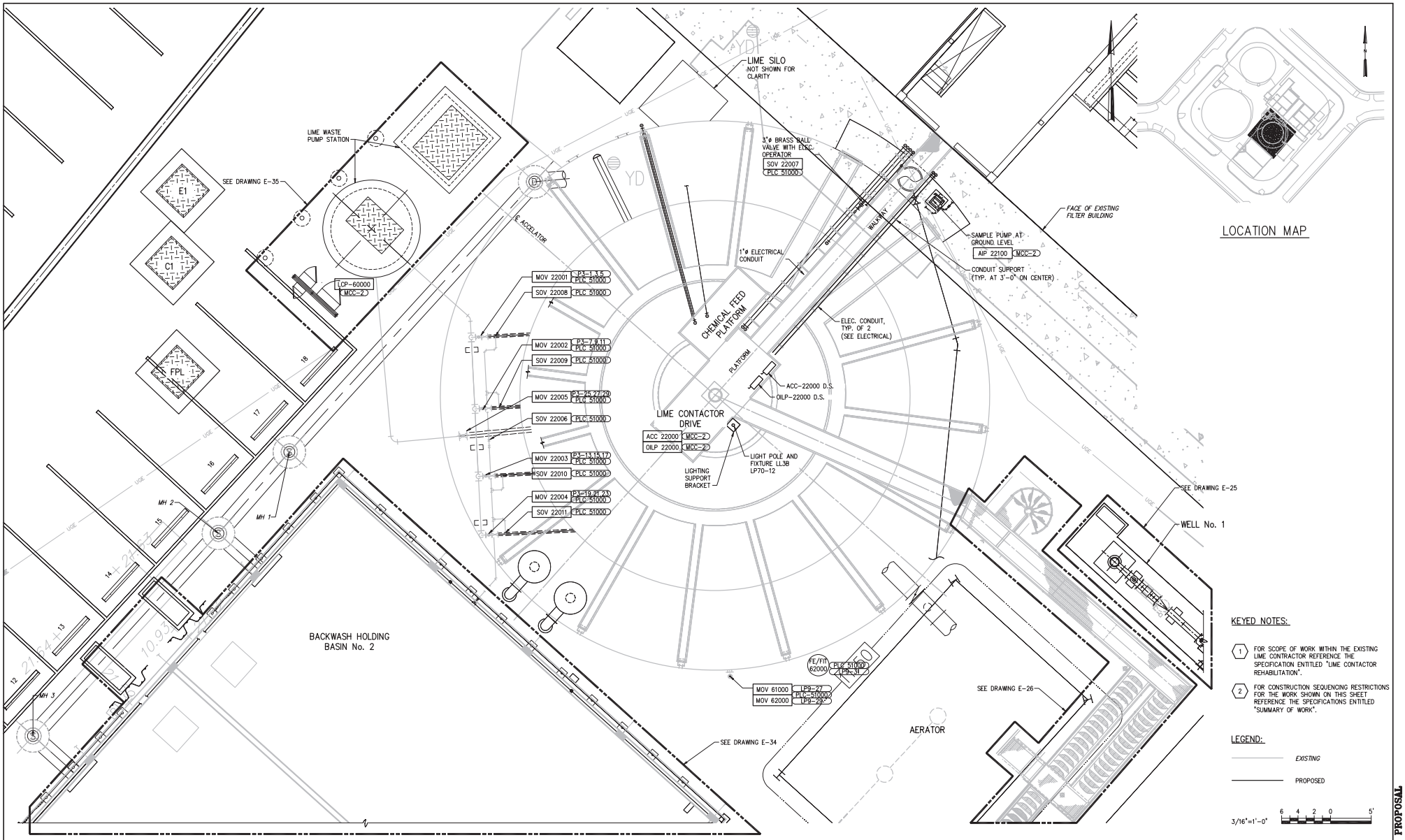

NO.	DATE	ISSUED FOR	BY
1	07/24/15	REQUEST FOR PROPOSAL	G.A.B.

DESIGNED J.M.B.
DRAWN G.P.B.
CHECKED J.C.B.
PROJ. ENGR. J.C.B.

JOHN C. BURKE P.E.
No. 17301

HAZEN AND SAWYER
Environmental Engineers & Scientists
4000 Hollywood Boulevard, Suite 750N
Hollywood, Florida 33021
Certificate of Authorization Number: 2771

SCALE 3/16"=1'-0"

CLIENTS PROJECT: –
ENGINEERS PROJECT: 44238-004
CAD REFERENCE: 44238-004BP3-E27

NORTH MIAMI FLORIDA
CITY OF NORTH MIAMI
PUBLIC WORKS UTILITIES

WINSON WATER TREATMENT PLANT
RELIABILITY IMPROVEMENTS – VOLUME C: WTP REHAB

LIME CONTACTOR POWER AND LIGHTING PLAN

DATE: JULY 2015
SHEET: 266 OF 335
DRAWING: E-27

REQUEST FOR PROPOSAL

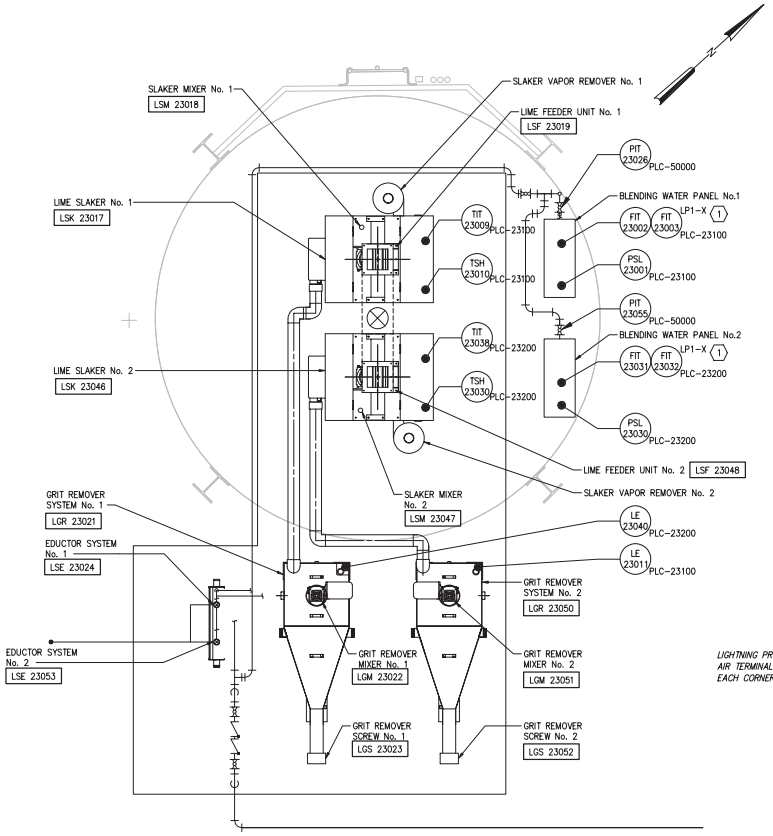

LOWER PLAN
1/2" = 1'-0"

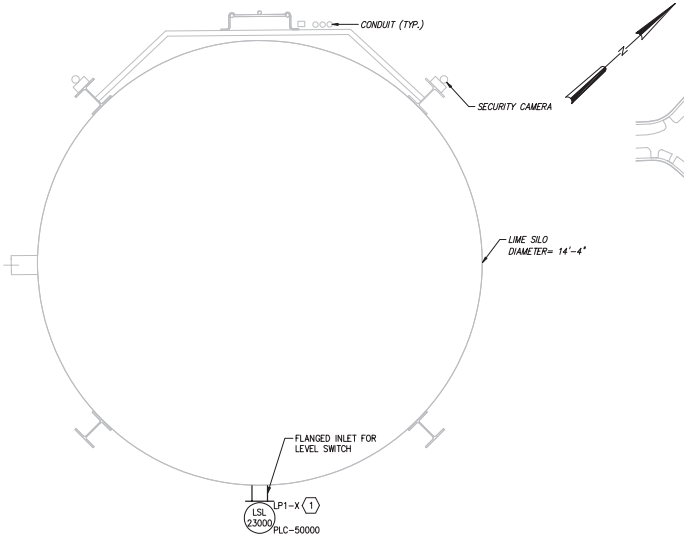

INTERMEDIATE PLAN
1/2" = 1'-0"

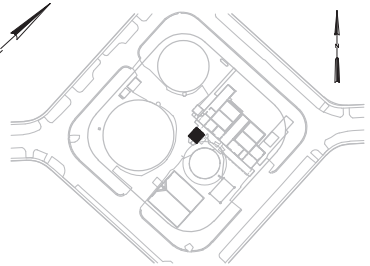

LOCATION MAP

1 LP1 IS AN EXISTING PANEL LOCATED IN ELECTRIC ROOM NO.1. THE CONTRACTOR SHALL DETERMINE LP1 CIRCUIT FEEDING DEVICE RE-LABEL PANEL ACCORDINGLY.

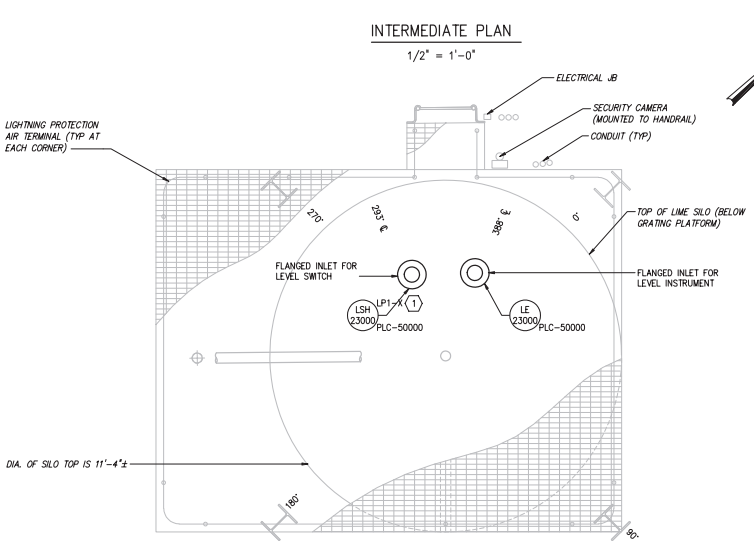

UPPER PLAN AT 45 FEET ± ABOVE GROUND SURFACE
1/2" = 1'-0"

LEGEND:
EXISTING
PROPOSED

1/2"=1'-0" 12" 0 1 3'

NO.	DATE	ISSUED FOR	BY
1	07/24/15	REQUEST FOR PROPOSAL	G.A.B.

DESIGNED J.M.B.
DRAWN G.P.B.
CHECKED J.C.B.
PROJ. ENGR. J.C.B.

JOHN C. BURKE P.E.
No. 17301

HAZEN AND SAWYER
Environmental Engineers & Scientists
4000 Hollywood Boulevard, Suite 750N
Hollywood, Florida 33021
Certificate of Authorization Number: 2771

SCALE 1/2"=1'-0"

CLIENTS PROJECT: –
ENGINEERS PROJECT: 44238-004
CAD REFERENCE: 44238-004BP3-E28

NORTH MIAMI FLORIDA
CITY OF NORTH MIAMI
PUBLIC WORKS UTILITIES

WINSON WATER TREATMENT PLANT
RELIABILITY IMPROVEMENTS – VOLUME C: WTP REHAB

LIME SLAKER AND SILO MODIFICATIONS
POWER AND LIGHTING PLAN

DATE: JULY 2015
SHEET: 267 OF 335
DRAWING: E-28

REQUEST FOR PROPOSAL

PLOT DATE: 7/24/2015 4:36 PM BY: TBOCAS

XREFs= ..\Tblock\44238-004-BP3-TB,..\Base-BP3\M-BP3-LimeSilo-Plans-X,..\Base-BP3\M-BP3-LimeSilo-Plans-S,..\Base-BP3\M-BP3-LimeSlaker-Plan

File = H:\44238-004\Drawings\design build package\volume c - wtp rehab\Bid Package 3 - WTP Rehab\Electrical\44238-004BP3-E28 Saved by tbocas Save date = 5/18/2015 11:14 AM

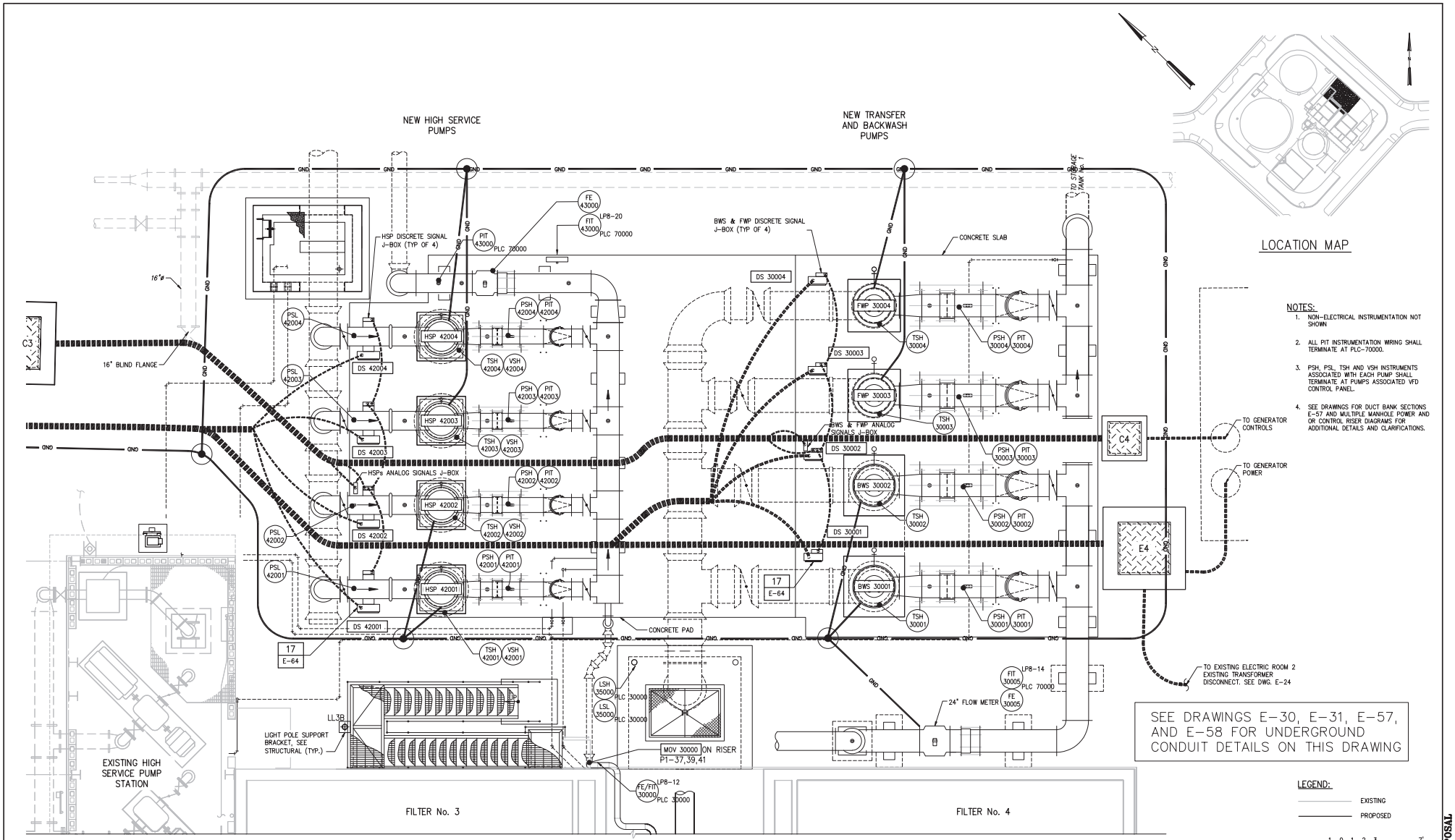

NO.	DATE	ISSUED FOR	BY
1	07/24/15	REQUEST FOR PROPOSAL	G.A.B.

DESIGNED J.M.B.
DRAWN G.P.B.
CHECKED J.C.B.
PROJ. ENGR. J.C.B.

JOHN C. BURKE P.E.
No. 17301

HAZEN AND SAWYER
Environmental Engineers & Scientists
4000 Hollywood Boulevard, Suite 750N
Hollywood, Florida 33021
Certificate of Authorization Number: 2771

SCALE 1/4"=1'-0"

CLIENTS PROJECT: –
ENGINEERS PROJECT: 44238-004
CAD REFERENCE: 44238-004BP3-E29

NORTH MIAMI FLORIDA
CITY OF NORTH MIAMI
PUBLIC WORKS UTILITIES

WINSON WATER TREATMENT PLANT
RELIABILITY IMPROVEMENTS – VOLUME C: WTP REHAB
MASTER PUMP STATION POWER AND LIGHTING PLAN

DATE: JULY 2015
SHEET: 268 OF 335
DRAWING: E-29

REQUEST FOR PROPOSAL

PLOT DATE: 7/24/2015 4:38 PM BY: TBOCAS

XREFs= ..\Tblock\44238-004-BP3-TB,..\Base-BP3\E-BP3-HSPS-Plan,..\Base-BP3\MN-BP3-HSPS-PLAN (Alt 2),..\Base-BP3\M-BP1-Filters-Plan-Bottom-X,..\Base-BP3\S-BP1-Filters-Plan-Bottom-X,..\Base-BP3\S-BP3-HSPS-PLAN,..\Base-BP3\S-BP3-ChemHand-Plan,..\Base-BP3\M-BP3-ChemHand-Plan,..\Base-BP3\S-BP3-ChemInPoint-Plan,..\Base-BP3\E-BP3-SiteElec-Prop

File = H:\44238-004\Drawings\design build package\volume c - wtp rehab\Bid Package 3 - WTP Rehab\Electrical\44238-004BP3-E29 Saved by tbocas Save date = 5/18/2015 11:14 AM

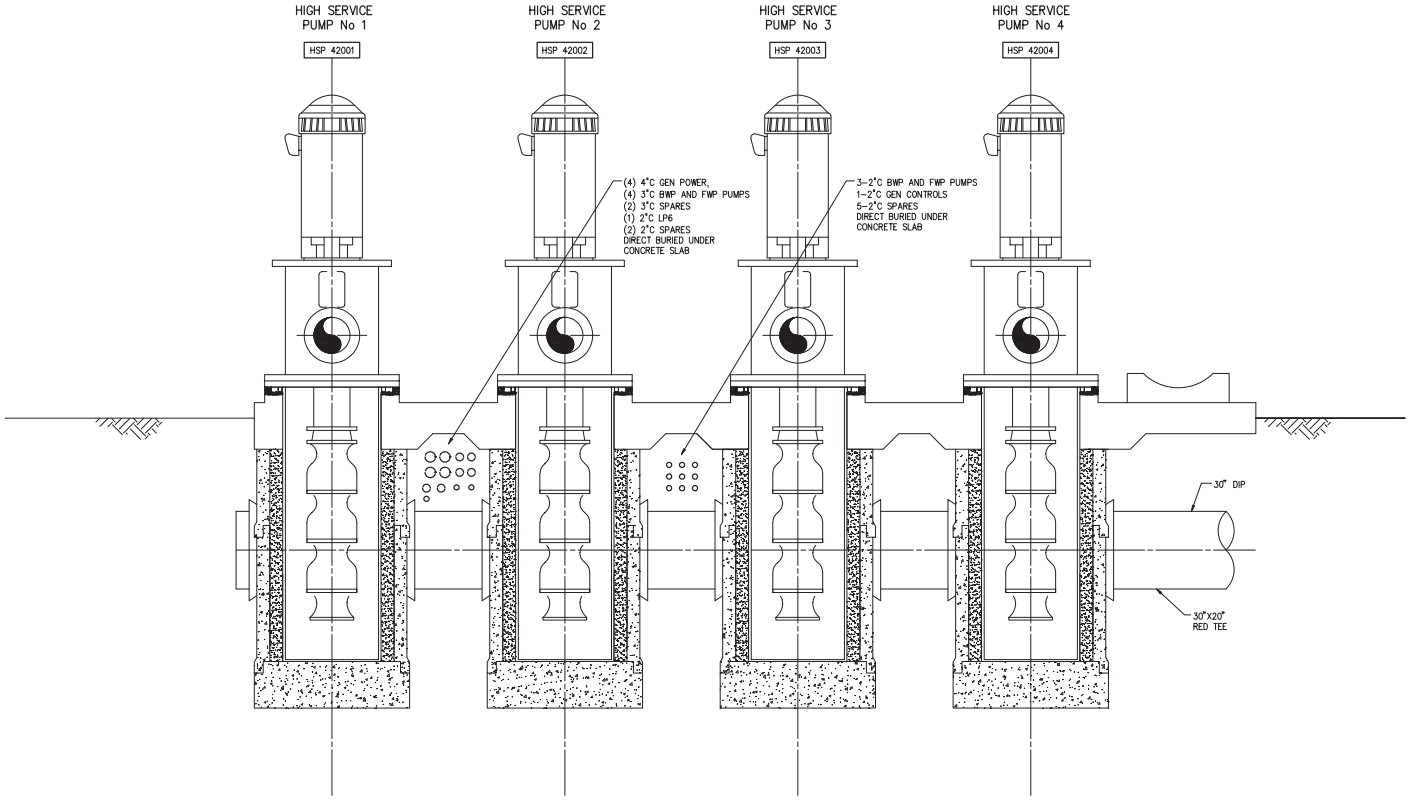

SECTION P3/C3 E-57
1/2"=1'-0"

NOTES:

1. MINIMUM DEPTH OF PUMP SHOWN ACTUAL PUMP AND CAN DIMENSION TO BE DETERMINED BY PUMP MANUFACTURER

LEGEND:

EXISTING
PROPOSED

1/2"=1'-0" 12" 0 1 3'

NO.	DATE	ISSUED FOR	BY
1	07/24/15	REQUEST FOR PROPOSAL	G.A.B.

DESIGNED J.M.B.
DRAWN G.P.B.
CHECKED J.C.B.
PROJ. ENGR. J.C.B.

JOHN C. BURKE P.E.
No. 17301

HAZEN AND SAWYER
Environmental Engineers & Scientists
4000 Hollywood Boulevard, Suite 750N
Hollywood, Florida 33021
Certificate of Authorization Number: 2771

SCALE 1/2"=1'-0"

CLIENTS PROJECT: –
ENGINEERS PROJECT: 44238-004
CAD REFERENCE: 44238-004BP3-E30

NORTH MIAMI FLORIDA
CITY OF NORTH MIAMI
PUBLIC WORKS UTILITIES

WINSON WATER TREATMENT PLANT
RELIABILITY IMPROVEMENTS – VOLUME C: WTP REHAB

HIGH SERVICE PUMPS
SECTION

DATE: JULY 2015
SHEET: 269 OF 335
DRAWING: E-30

REQUEST FOR PROPOSAL

PLOT DATE: 7/24/2015 4:38 PM BY: TBOCAS

XREFs= ..\Tblock\44238-004-BP3-TB,..\Base-BP3\S-BP3-HSPS-SECT,..\Base-BP3\M-BP3-HSPS-SECT,..\Base-BP3\S-BP3-Filters-Sections,..\Base-BP3\S-BP3-HSPS-PLAN

File = H:\44238-004\Drawings\design build package\volume c - wtp rehab\Bid Package 3 - WTP Rehab\Electrical\44238-004BP3-E30 Saved by tbocas Save date = 5/27/2015 10:39 AM

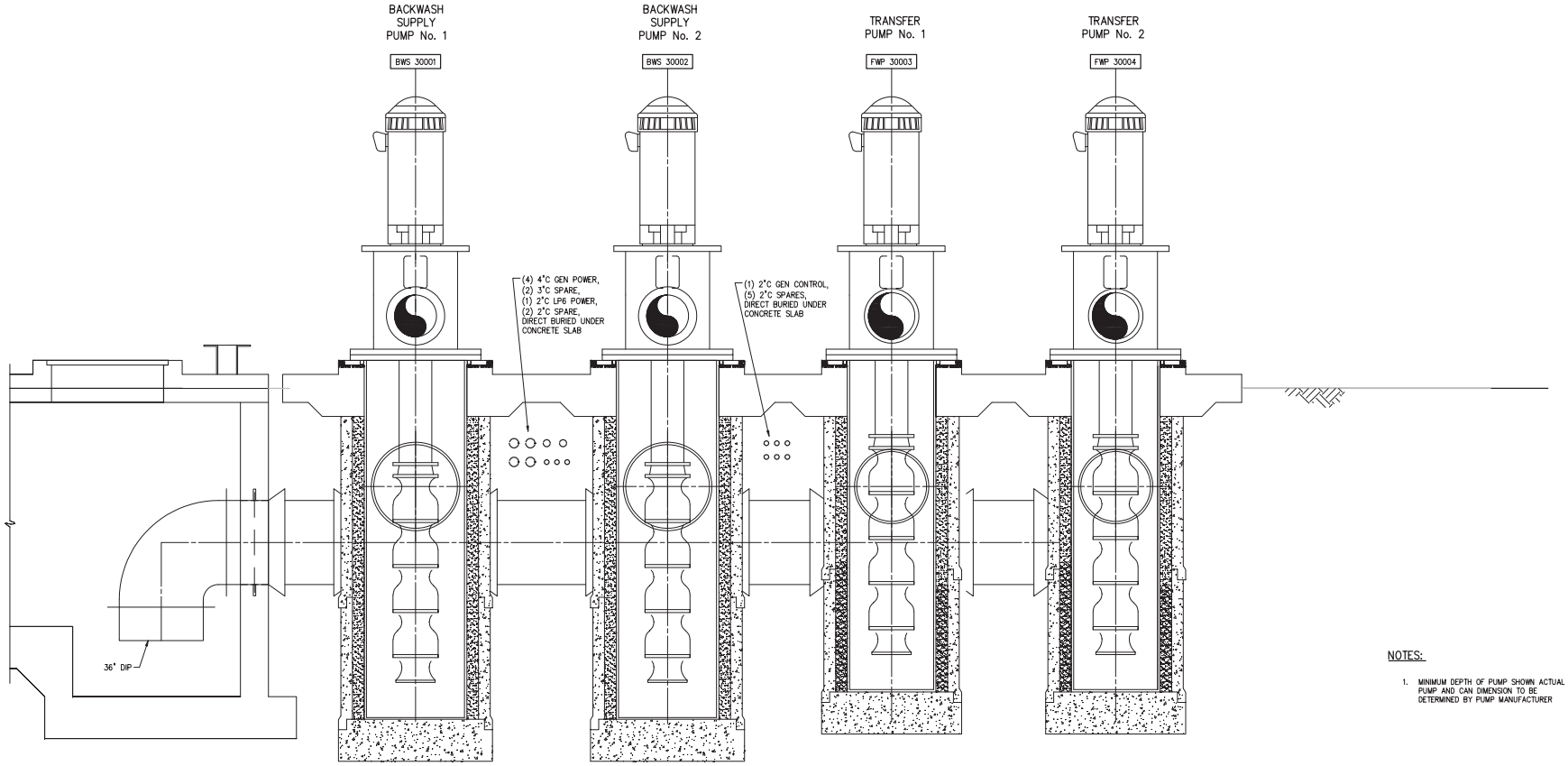

SECTION P5/C5 E-57
1/2"=1'-0"

NOTES:

1. MINIMUM DEPTH OF PUMP SHOWN ACTUAL PUMP AND CAN DIMENSION TO BE DETERMINED BY PUMP MANUFACTURER

LEGEND:

EXISTING
PROPOSED

1/2"=1'-0" 12" 0 1 3'

NO.	DATE	ISSUED FOR	BY
1	07/24/15	REQUEST FOR PROPOSAL	G.A.B.

DESIGNED J.M.B.
DRAWN G.P.B.
CHECKED J.C.B.
PROJ. ENGR. J.C.B.

JOHN C. BURKE P.E.
No. 17301

HAZEN AND SAWYER
Environmental Engineers & Scientists
4000 Hollywood Boulevard, Suite 750N
Hollywood, Florida 33021
Certificate of Authorization Number: 2771

SCALE 1/2"=1'-0"

CLIENTS PROJECT: –
ENGINEERS PROJECT: 44238-004
CAD REFERENCE: 44238-004BP3-E31

NORTH MIAMI FLORIDA
CITY OF NORTH MIAMI
PUBLIC WORKS UTILITIES

WINSON WATER TREATMENT PLANT
RELIABILITY IMPROVEMENTS – VOLUME C: WTP REHAB

BACKWASH AND TRANSFER PUMPS SECTION

DATE: JULY 2015
SHEET: 270 OF 335
DRAWING: E-31

REQUEST FOR PROPOSAL

PLOT DATE: 7/24/2015 4:36 PM BY: TBOCAS

XREFs= ..\Tblock\44238-004-BP3-TB,..\Base-BP3\S-BP3-HSPS-SECT,..\Base-BP3\M-BP3-HSPS-SECT,..\Base-BP3\S-BP3-Filters-Sections,..\Base-BP3\S-BP3-HSPS-PLAN

File = H:\44238-004\Drawings\design build package\volume c - wtp rehab\Bid Package 3 - WTP Rehab\Electrical\44238-004BP3-E31 Saved by tbocas Save date = 5/27/2015 10:39 AM

INTERIM CHEMICAL EQUIPMENT ELECTRICAL			
ID	EQUIPMENT NAME	HP	VOLTAGE
AMP 56100	AMMONIA METERING PUMP	1/4	120V
CAP 56200	COAGULANT AID METERING PUMP	1/4	120V
MIX 56201	COAGULANT AID MIXER	1/4	120V
FLP 56300	FLUORIDE METERING PUMP	1/4	120V
FDS 56300	FLUORIDE DRUM SCALE	1/4	120V

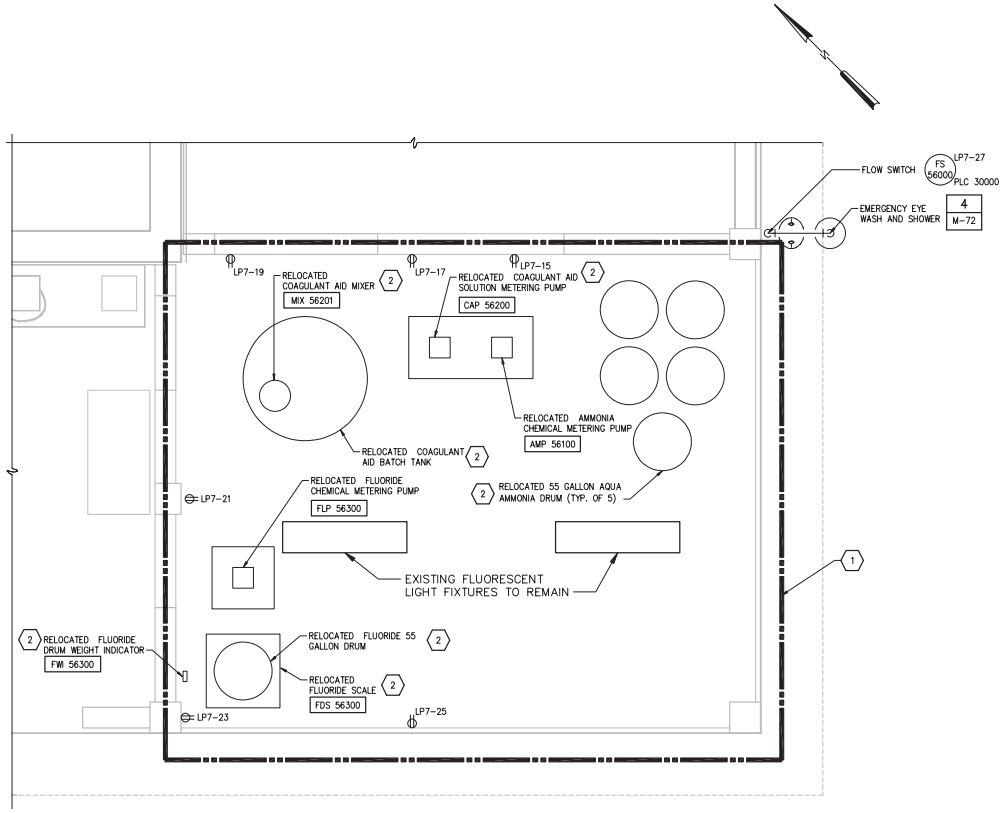

PLAN
1/2" = 1'-0"

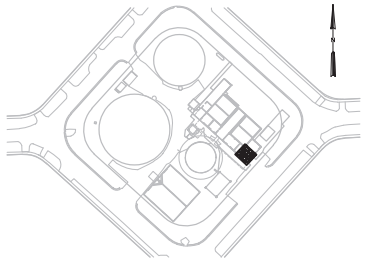

LOCATION MAP

KEYED NOTES:

1. AFTER DEMOLITION OF THE HYPOCHLORITE SYSTEM THIS AREA SHALL BE USED FOR THE INTERIM CHEMICAL FEED SYSTEMS AS SPECIFIED IN THE SECTION ENTITLED "INTERIM CHEMICAL FEED FACILITY" AND AS SHOWN ON THIS DRAWING.
2. RELOCATE CHEMICAL STORAGE DRUMS, TANKS, PUMPS AND ACCESSORIES FROM THEIR CURRENT LOCATION TO THIS PROPOSED LOCATION PER THE REQUIREMENTS IN THE SECTION TILED "INTERIM CHEMICAL FEED FACILITY".

LEGEND:

PHOTO # – ARROW INDICATES DIRECTION AND POINT OF VIEW OF PHOTO

PROPOSED

TO BE REMOVED

1/2"=1'-0" 12" 0 1 3'

REQUEST FOR PROPOSAL

NO.	DATE	ISSUED FOR	BY
1	07/24/15	REQUEST FOR PROPOSAL	G.A.B.

DESIGNED J.M.B.
DRAWN G.P.B.
CHECKED J.C.B.
PROJ. ENGR. J.C.B.

JOHN C. BURKE P.E.
No. 17301

HAZEN AND SAWYER
Environmental Engineers & Scientists
4000 Hollywood Boulevard, Suite 750N
Hollywood, Florida 33021
Certificate of Authorization Number: 2771

SCALE 1/2"=1'-0"

CLIENTS PROJECT: –
ENGINEERS PROJECT: 44238-004
CAD REFERENCE: 44238-004BP3-E32

NORTH MIAMI FLORIDA
CITY OF NORTH MIAMI
PUBLIC WORKS UTILITIES

WINSON WATER TREATMENT PLANT
RELIABILITY IMPROVEMENTS – VOLUME C: WTP REHAB
INTERIM CHEMICAL STORAGE AND FEED SYSTEM POWER AND LIGHTING PLAN

DATE: JULY 2015
SHEET: 271 OF 335
DRAWING: E-32

PLOT DATE: 7/24/2015 4:36 PM BY: TBOCAS

XREFs= ..\Tblock\44238-004-BP3-TB,..\Base-BP3\M-BP1-Filters-Plan-Bottom-X,..\Base-BP3\S-BP1-Filters-Plan-Bottom-X,..\Base-BP3\C-Site-Survey-X,..\Base-BP3\M-BP3-Filters-Plan-Bottom

File = H:\44238-004\Drawings\design build package\volume c - wtp rehab\Bid Package 3 - WTP Rehab\Electrical\44238-004BP3-E32 Saved by tbocas Save date = 7/24/2015 4:06 PM

CHEMICAL HANDLING FACILITY LOCAL CONTROL PANEL SCHEDULE		
ID	DESCRIPTION	COMMENTS
PLC 50000	CHEMICAL HANDLING FACILITY PLC	FLOOR/WALL
LCP 53000	COAGULANT AID PACKAGE UNIT CONTROL PANEL	POST MOUNTED
LCP 53100	COAGULANT AID PUMP SKID LOCAL CONTROL PANEL	POST MOUNTED
LCP 55100	ANTI-COAGULANT PUMP SKID LCP	POST MOUNTED
LCP 52000	FLUORIDE UNLOADING LCP	WALL MOUNTED
LCP 52020	FLUORIDE TRANSFER PUMP LCP	POST MOUNTED
LCP 52100	FLUORIDE PUMP SKID LCP	WALL MOUNTED
LCP 54000	AMMONIA UNLOADING LCP	WALL MOUNTED
LCP 54100	AMMONIA PUMP SKID LCP	WALL MOUNTED
LCP 56000	CHEMICAL LEAK DETECTION PANEL	WALL MOUNTED

NOTES:

1. SEE DRAWING #### FOR EQUIPMENT LOCATIONS IN SECTION VIEW
2. SEE LP8 PANEL SCHEDULE ON DRAWING E-45 FOR LOCAL CONTROL PANEL CIRCUIT NUMBERS.
3. LIGHT FIXTURES CIRCUIT NUMBERS HAVE A SUFFIX LETTER THAT INDICATES WHICH SWITCH IS ASSOCIATED WITH THAT LIGHT.
4. SEE RISER DIAGRAMS ON DRAWINGS E-49 THRU E-53 FOR A COMPLETE LIST OF SIGNAL CONDUITS AND WIRING.
5. ALL ELECTRICAL DEVICES SHALL BE A MINIMUM 36-INCHES AFF.
6. THERE SHALL NOT BE ANY ELECTRICAL FITTINGS OR CONDUIT JOINTS BELOW THE MAXIMUM ASSOCIATED CONTAINMENT ELEVATIONS.

KEY NOTE:

1. SEE RISER DRAWING FOR DETAILS.

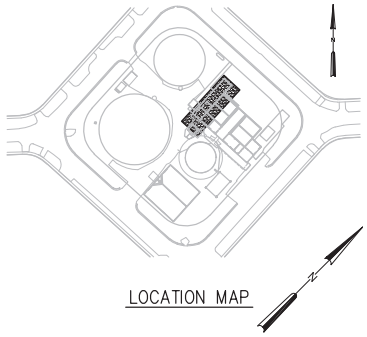

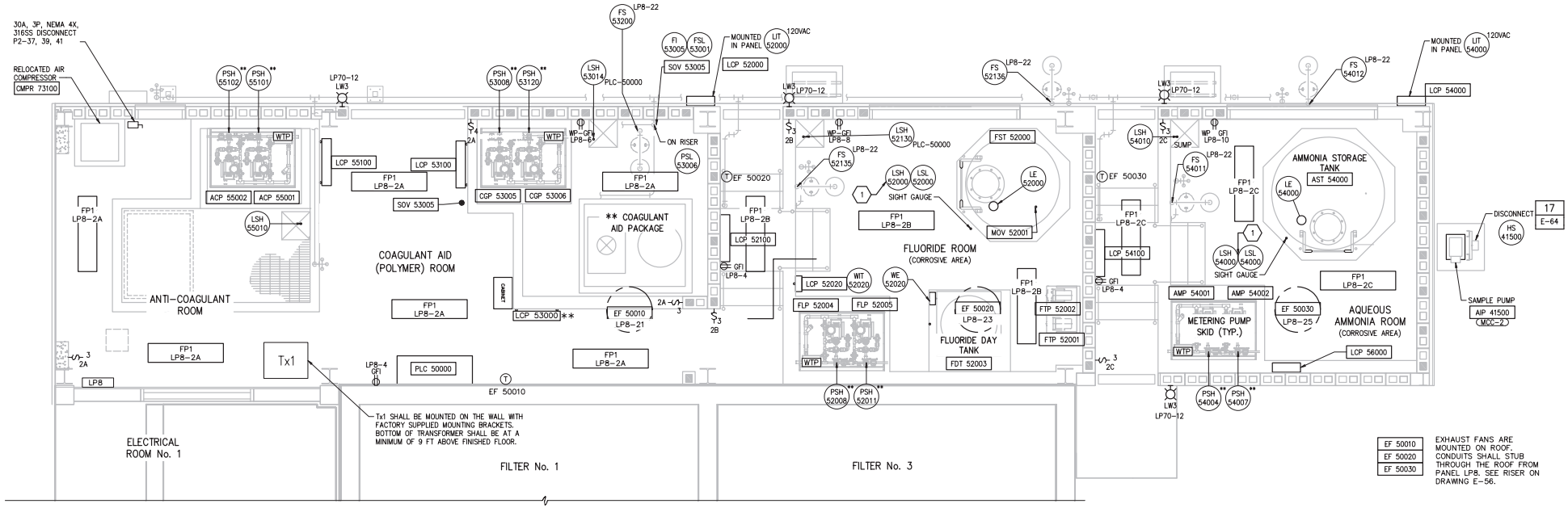

LEGEND

** PROVIDED, INSTALLED AND WIRED BY EQUIPMENT VENDOR

WTP – VENDOR PACKAGE WIRING TERMINATION POINT

CHEMICAL HANDLING FACILITY
PROPOSED PLAN
3/8" = 1'-0"

3/8"=1'-0"

NO.	DATE	ISSUED FOR	BY
1	07/24/15	REQUEST FOR PROPOSAL	G.A.B.

DESIGNED J.M.B.
DRAWN G.P.B.
CHECKED J.C.B.
PROJ. ENGR. J.C.B.

JOHN C. BURKE P.E.
No. 17301

HAZEN AND SAWYER
Environmental Engineers & Scientists
4000 Hollywood Boulevard, Suite 750N
Hollywood, Florida 33021
Certificate of Authorization Number: 2771

SCALE 3/8"=1'-0"

CLIENTS PROJECT: –
ENGINEERS PROJECT: 44238-004
CAD REFERENCE: 44238-004BP3-E33

CITY OF NORTH MIAMI
PUBLIC WORKS UTILITIES

WINSON WATER TREATMENT PLANT
RELIABILITY IMPROVEMENTS – VOLUME C: WTP REHAB

CHEMICAL HANDLING FACILITY
POWER AND LIGHTING PLAN

DATE: JULY 2015
SHEET: 272 OF 335
DRAWING: E-33

REQUEST FOR PROPOSAL

PLOT DATE: 7/24/2015 4:38 PM BY: TBOCAS

XREFs= ..\Tblock\44238-004-BP3-TB,..\Base-BP3\S-BP3-ChemHand-Plan,..\Base-BP3\S-BP1-Filters-Plan-Bottom-X,..\Base-BP3\M-BP3-ChemHand-Plan,..\Base-BP3\H-BP3-ChemHand-Plan

File = H:\44238-004\Drawings\design build package\volume c - wtp rehab\Bid Package 3 - WTP Rehab\Electrical\44238-004BP3-E33 Saved by jbroad Save date = 12/9/2013 6:28 PM

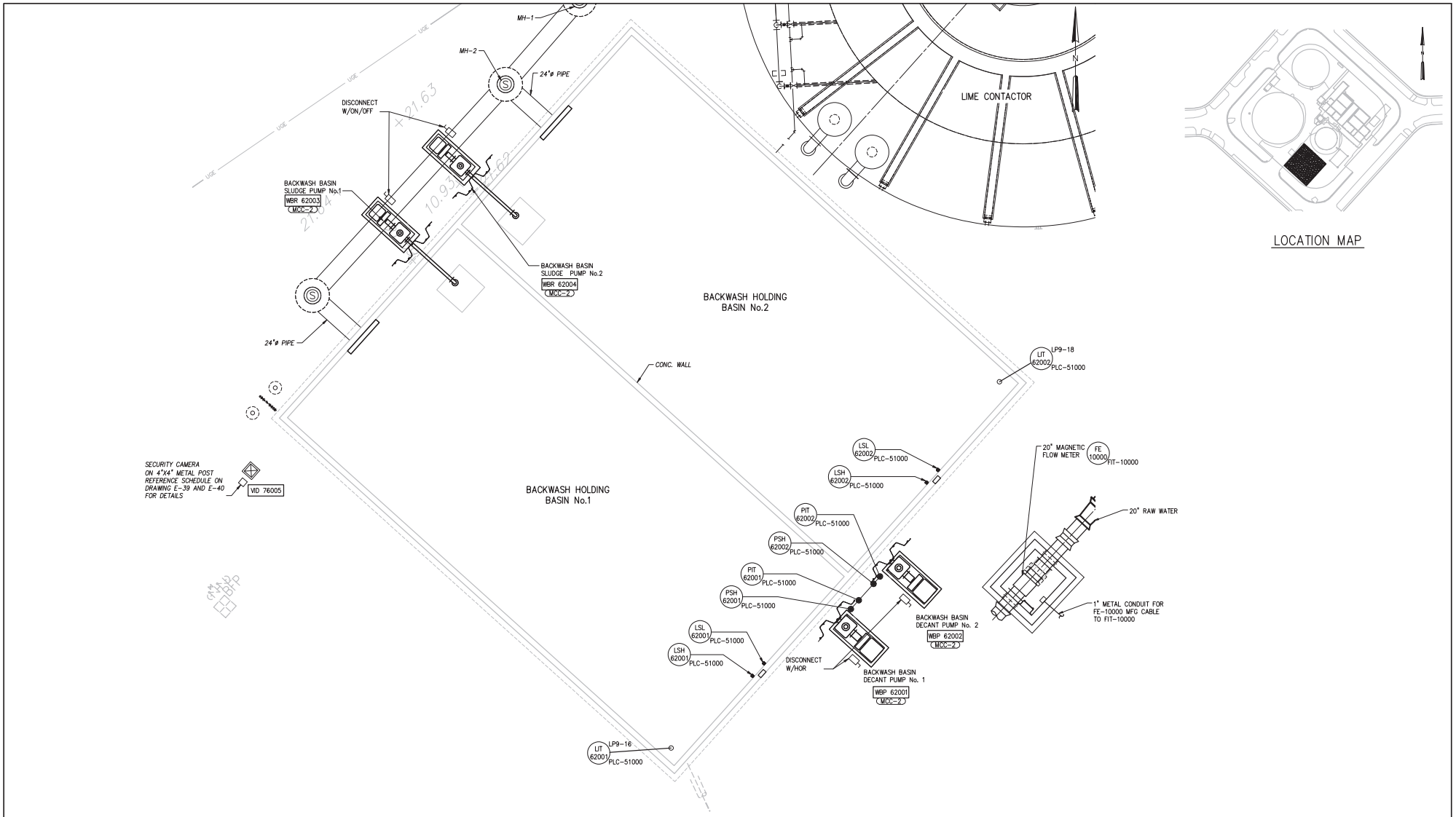

NO.	DATE	ISSUED FOR	BY
1	07/24/15	REQUEST FOR PROPOSAL	G.A.B.

DESIGNED J.M.B.
DRAWN J.M.B.
CHECKED J.C.B.
PROJ. ENGR. J.C.B.

JOHN C. BURKE P.E.
No. 17301

HAZEN AND SAWYER
Environmental Engineers & Scientists
4000 Hollywood Boulevard, Suite 750N
Hollywood, Florida 33021
Certificate of Authorization Number: 2771

SCALE 3/16"=1'-0"

CLIENTS PROJECT: –
ENGINEERS PROJECT: 44238-004
CAD REFERENCE: 44238-004BP3-E34

NORTH MIAMI FLORIDA
CITY OF NORTH MIAMI
PUBLIC WORKS UTILITIES

WINSON WATER TREATMENT PLANT
RELIABILITY IMPROVEMENTS – VOLUME C: WTP REHAB

BACKWASH HOLDING BASINS
POWER PLAN

DATE: JULY 2015
SHEET: 273 OF 335
DRAWING: E-34

REQUEST FOR PROPOSAL

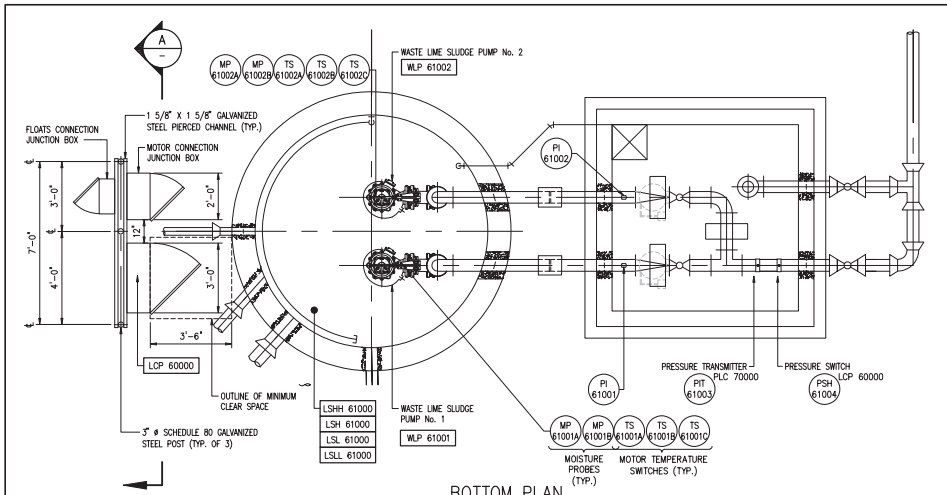

BOTTOM PLAN
3/8" = 1'-0"

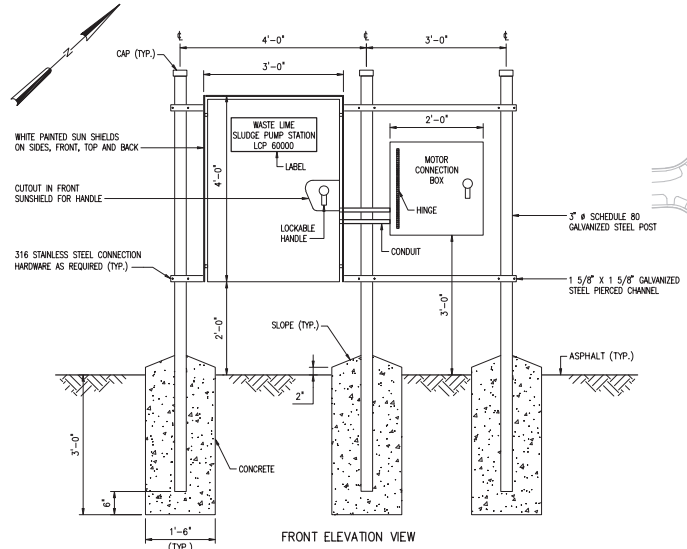

FRONT ELEVATION VIEW

SECTION A
3/4" = 1'-0"

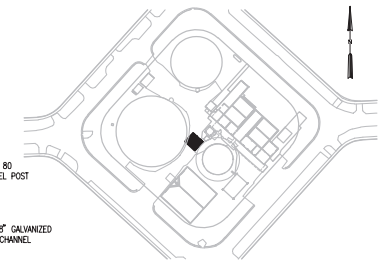

LOCATION MAP

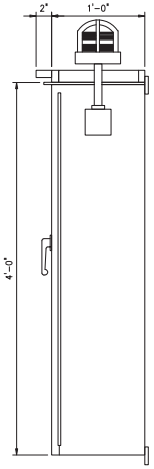

SIDE VIEW

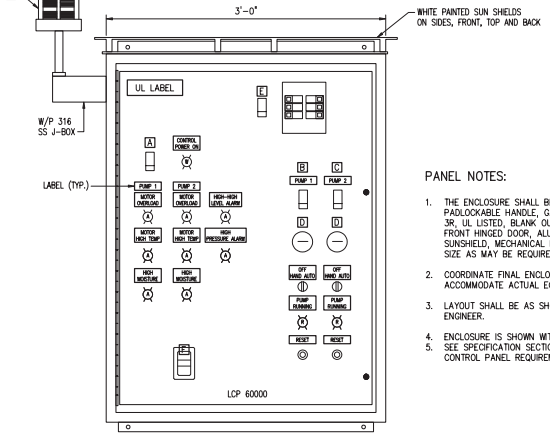

FRONT VIEW OUTER DOOR NOT SHOWN

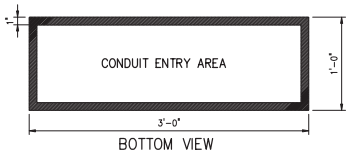

BOTTOM VIEW

CONTROL PANEL LAYOUT
NTS

PANEL NOTES:

1. THE ENCLOSURE SHALL BE 316 SS, 3PT PADLOCKABLE HANDLE, GASKETED, MODIFIED NEMA 3R, UL LISTED, BLANK OUTER DOOR, ALUMINUM DEAD FRONT HINGED DOOR, ALUMINUM SUBPLATE, SUNSHIELD, MECHANICAL INTERLOCK. INCREASE PANEL SIZE AS MAY BE REQUIRED.
2. COORDINATE FINAL ENCLOSURE SIZE TO ACCOMMODATE ACTUAL EQUIPMENT.
3. LAYOUT SHALL BE AS SHOWN AND APPROVED BY ENGINEER.
4. ENCLOSURE IS SHOWN WITH OUTER DOOR REMOVED.
5. SEE SPECIFICATION SECTION 11210 FOR ADDITIONAL CONTROL PANEL REQUIREMENTS.

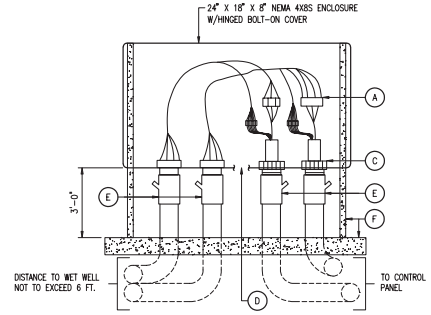

PUMPS MOTOR CONNECTION BOX
NTS

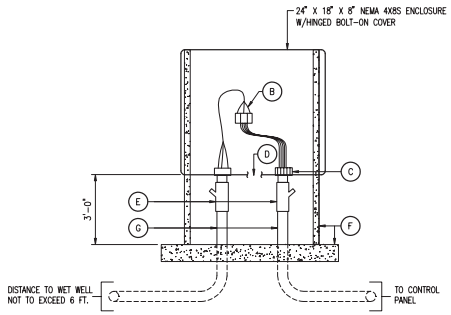

FLOATS CONNECTION BOX
NTS

LEGEND:

- A MAIN POWER CIRCUIT BREAKER
- B PUMP NO.1 CIRCUIT BREAKER
- C PUMP NO.2 CIRCUIT BREAKER
- D RUNNING TIME METERS (2)
- E L.P. MAIN CIRCUIT BREAKER
- F GFI DUPLEX RECEPTACLE
- G W/P TOP MTD. HIGH-HIGH LEVEL ALARM LIGHT

- A C-POLE POWER INSULATED TERM BLOCK PANEL MOUNT ALLEN BRADLEY BULLETIN 1492 SIZED AS REQUIRED (ONE PER PUMP).
- B C-FLOAT CIRCUITS CONTROL INSULATED TERM BLOCK PANEL MOUNT ALLEN BRADLEY BULLETIN 1492.
- C GLAND NUT AND NEOPRENE BUSHING EQUAL TO CROUSE HINDS CGK SIZE AS REQUIRED FOR CABLE O.D.
- D FIELD PUNCH (1/2") DRAIN HOLES.
- E CONDUIT SEAL.
- F CONTROL PANEL FOUNDATION.
- G HIGH/LOW LEVEL FLOATS.

GENERAL NOTES:

1. CONTRACTOR SHALL PROVIDE AND INSTALL CONDUIT SEAL OFF FITTINGS ON ALL CONDUIT LEAVING THE WET WELL.
2. CONTROL PANEL SHALL HAVE A UL 508A LABEL.
3. PROVIDE ARC FLASH LABELS PER NEC

3/4"=1'-0" 6" 0 1 2'
3/8"=1'-0" 12" 0 1 2 4'

NO.	DATE	ISSUED FOR	BY
1	07/24/15	REQUEST FOR PROPOSAL	G.A.B.

DESIGNED J.M.B.
DRAWN G.P.B.
CHECKED J.C.B.
PROJ. ENGR. J.C.B.

JOHN C. BURKE P.E.
No. 17301

HAZEN AND SAWYER
Environmental Engineers & Scientists
4000 Hollywood Boulevard, Suite 750N
Hollywood, Florida 33021
Certificate of Authorization Number: 2771

SCALE: AS NOTED

CLIENTS PROJECT: –
ENGINEERS PROJECT: 44238-004
CAD REFERENCE: 44238-004BP3-E35

NORTH MIAMI FLORIDA
CITY OF NORTH MIAMI
PUBLIC WORKS UTILITIES

WINSON WATER TREATMENT PLANT
RELIABILITY IMPROVEMENTS – VOLUME C: WTP REHAB

WASTE LIME SLUDGE PUMP STATION
POWER PLAN

DATE: JULY 2015
SHEET: 274 OF 335
DRAWING: E-35

REQUEST FOR PROPOSAL

PLOT DATE: 7/24/2015 4:36 PM BY: TBOCAS

XREFs= ..\Tblock\44238-004-BP3-TB,..\Base-BP3\M-BP3-SludgePS-Plan,..\Base-BP3\S-BP3-SludgePS-Plan

File = H:\44238-004\Drawings\design build package\volume c - wtp rehab\Bid Package 3 - WTP Rehab\Electrical\44238-004BP3-E35 Saved by randersen Save date = 6/9/2014 12:34 PM

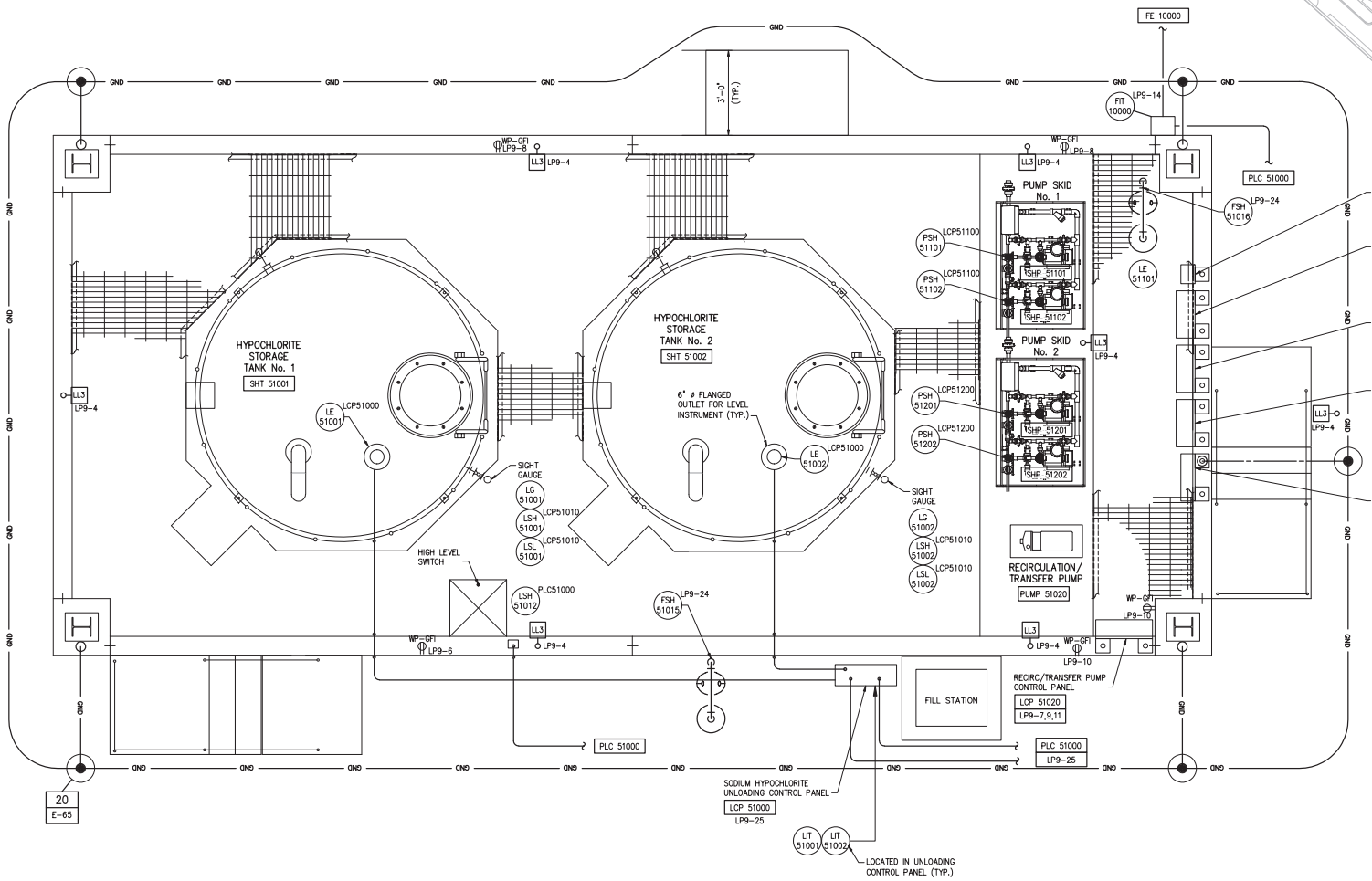

KEYED NOTES:

1. LOCAL CONTROL PANEL SHALL BE DESIGNED AND PROVIDED BY THE ASSOCIATED EQUIPMENT VENDOR.

NO.	DATE	ISSUED FOR	BY
1	07/24/15	REQUEST FOR PROPOSAL	G.A.B.

DESIGNED J.M.B.
DRAWN G.P.B.
CHECKED J.C.B.
PROJ. ENGR. J.C.B.

JOHN C. BURKE P.E.
No. 17301

HAZEN AND SAWYER
Environmental Engineers & Scientists
4000 Hollywood Boulevard, Suite 750N
Hollywood, Florida 33021
Certificate of Authorization Number: 2771

SCALE 1/2"=1'-0"

CLIENTS PROJECT: –
ENGINEERS PROJECT: 44238-004
CAD REFERENCE: 44238-004BP3-E36

NORTH MIAMI FLORIDA
CITY OF NORTH MIAMI
PUBLIC WORKS UTILITIES

WINSON WATER TREATMENT PLANT
RELIABILITY IMPROVEMENTS – VOLUME C: WTP REHAB

SODIUM HYPOCHLORITE FACILITIES
POWER AND LIGHTING

DATE: JULY 2015
SHEET: 275 OF 335
DRAWING: E-36

REQUEST FOR PROPOSAL

PLOT DATE: 7/24/2015 4:39 PM BY: TBOCAS

XREFs= ..\Tblock\44238-004-BP3-TB,..\Base-BP3\S-BP3-Hypochlorite-Plan,..\Base-BP3\M-BP3-Hypochlorite-Plan

File = H:\44238-004\Drawings\design build package\volume c - wtp rehab\Bid Package 3 - WTP Rehab\Electrical\44238-004BP3-E36 Saved by tbocas Save date = 5/27/2015 10:39 AM

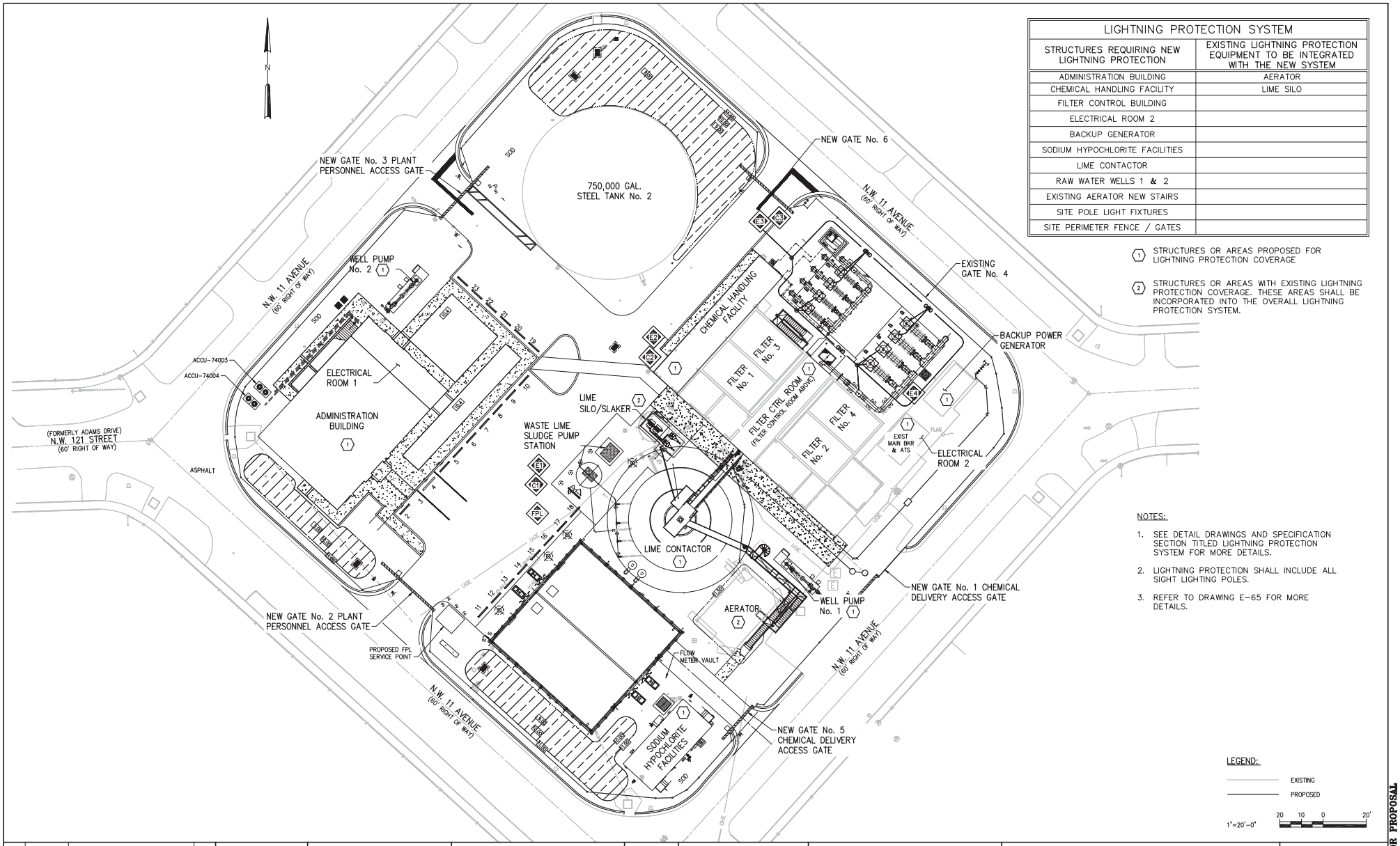

LIGHTNING PROTECTION SYSTEM	
STRUCTURES REQUIRING NEW LIGHTNING PROTECTION	EXISTING LIGHTNING PROTECTION EQUIPMENT TO BE INTEGRATED WITH THE NEW SYSTEM
ADMINISTRATION BUILDING	AERATOR
CHEMICAL HANDLING FACILITY	LIME SILO
FILTER CONTROL BUILDING	
ELECTRICAL ROOM 2	
BACKUP GENERATOR	
SODIUM HYPOCHLORITE FACILITIES	
LIME CONTACTOR	
RAW WATER WELLS 1 & 2	
EXISTING AERATOR NEW STAIRS	
SITE POLE LIGHT FIXTURES	
SITE PERIMETER FENCE / GATES	

(1) STRUCTURES OR AREAS PROPOSED FOR LIGHTNING PROTECTION COVERAGE

(2) STRUCTURES OR AREAS WITH EXISTING LIGHTNING PROTECTION COVERAGE. THESE AREAS SHALL BE INCORPORATED INTO THE OVERALL LIGHTNING PROTECTION SYSTEM.

NOTES:

1. SEE DETAIL DRAWINGS AND SPECIFICATION SECTION TITLED LIGHTNING PROTECTION SYSTEM FOR MORE DETAILS.
2. LIGHTNING PROTECTION SHALL INCLUDE ALL SIGHT LIGHTING POLES.
3. REFER TO DRAWING E-65 FOR MORE DETAILS.

LEGEND:

EXISTING

PROPOSED

1"=20'-0"

20 10 0 20'

NO.	DATE	ISSUED FOR	BY
1	07/24/15	REQUEST FOR PROPOSAL	G.A.B.

DESIGNED J.M.B.
DRAWN G.P.B.
CHECKED J.C.B.
PROJ. ENGR. J.C.B.

JOHN C. BURKE P.E.
No. 17301

HAZEN AND SAWYER
Environmental Engineers & Scientists
4000 Hollywood Boulevard, Suite 750N
Hollywood, Florida 33021
Certificate of Authorization Number: 2771

SCALE 1"=20'-0"

CLIENTS PROJECT: –
ENGINEERS PROJECT: 44238-004
CAD REFERENCE: 44238-004BP3-E37

NORTH MIAMI FLORIDA
CITY OF NORTH MIAMI
PUBLIC WORKS UTILITIES

WINSON WATER TREATMENT PLANT
RELIABILITY IMPROVEMENTS – VOLUME C: WTP REHAB
LIGHTNING PROTECTION SYSTEM

DATE: JULY 2015
SHEET: 276 OF 335
DRAWING: E-37

REQUEST FOR PROPOSAL

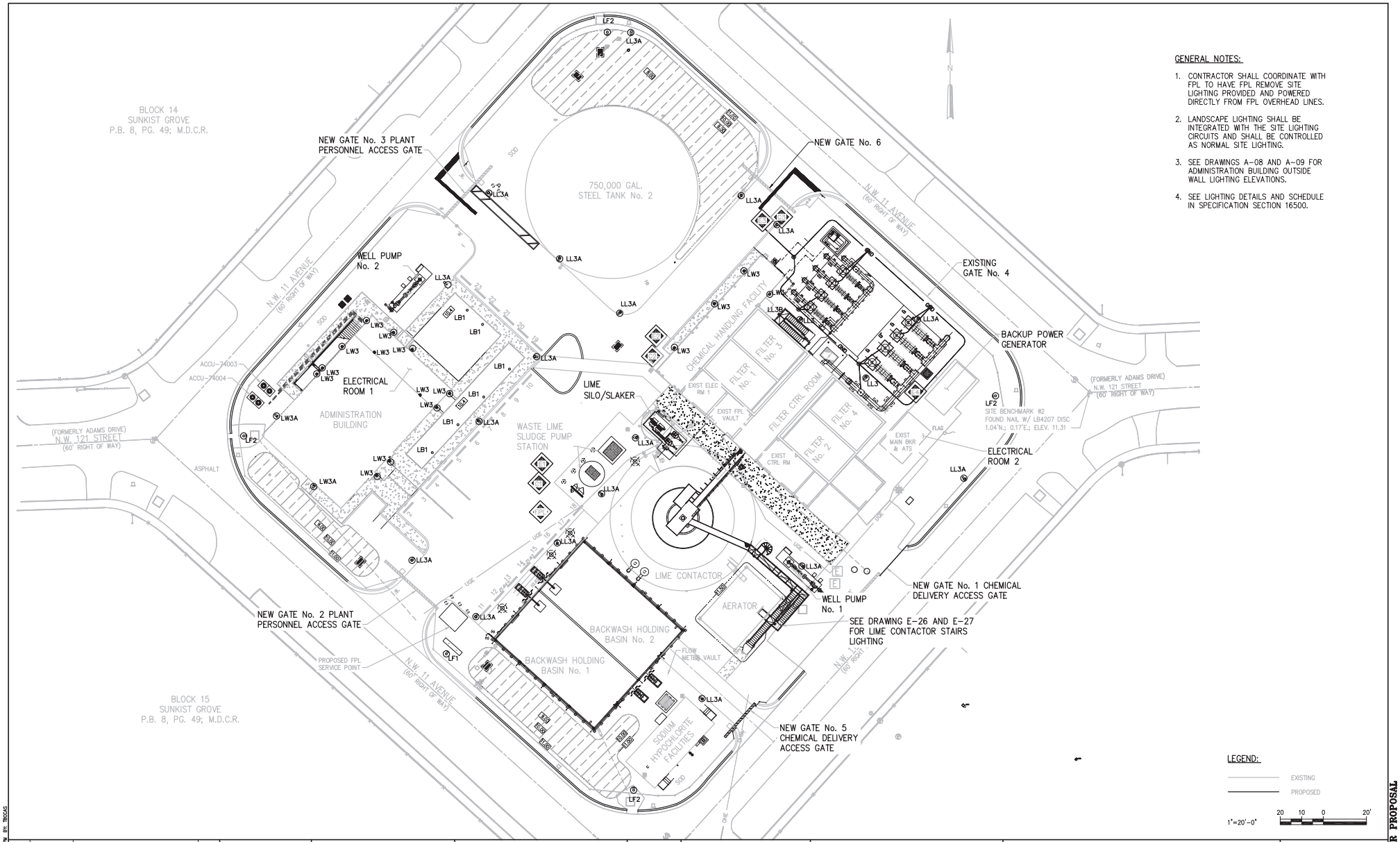

GENERAL NOTES:

1. CONTRACTOR SHALL COORDINATE WITH FPL TO HAVE FPL REMOVE SITE LIGHTING PROVIDED AND POWERED DIRECTLY FROM FPL OVERHEAD LINES.
2. LANDSCAPE LIGHTING SHALL BE INTEGRATED WITH THE SITE LIGHTING CIRCUITS AND SHALL BE CONTROLLED AS NORMAL SITE LIGHTING.
3. SEE DRAWINGS A-08 AND A-09 FOR ADMINISTRATION BUILDING OUTSIDE WALL LIGHTING ELEVATIONS.
4. SEE LIGHTING DETAILS AND SCHEDULE IN SPECIFICATION SECTION 16500.

NO.	DATE	ISSUED FOR	BY
1	07/24/15	REQUEST FOR PROPOSAL	G.A.B.

DESIGNED J.M.B.
DRAWN G.P.B.
CHECKED J.C.B.
PROJ. ENGR. J.C.B.

JOHN C. BURKE P.E.
No. 17301

HAZEN AND SAWYER
Environmental Engineers & Scientists
4000 Hollywood Boulevard, Suite 750N
Hollywood, Florida 33021
Certificate of Authorization Number: 2771

SCALE 1"=20'-0"

CLIENTS PROJECT: –
ENGINEERS PROJECT: 44238-004
CAD REFERENCE: 44238-004BP3-E38

NORTH MIAMI FLORIDA
CITY OF NORTH MIAMI
PUBLIC WORKS UTILITIES

WINSON WATER TREATMENT PLANT
RELIABILITY IMPROVEMENTS – VOLUME C: WTP REHAB

SITE LIGHTING PLAN

DATE: JULY 2015
SHEET: 277 OF 335
DRAWING: E-38

REQUEST FOR PROPOSAL

PLOT DATE: 7/24/2015 4:39 PM BY: TBOCAS

File = H:\44238-004\Drawings\design build package\volume c - wtp rehab\Bid Package 3 - WTP Rehab\Electrical\44238-004BP3-E38 Saved by jbroad Save date = 12/20/2013 11:19 AM

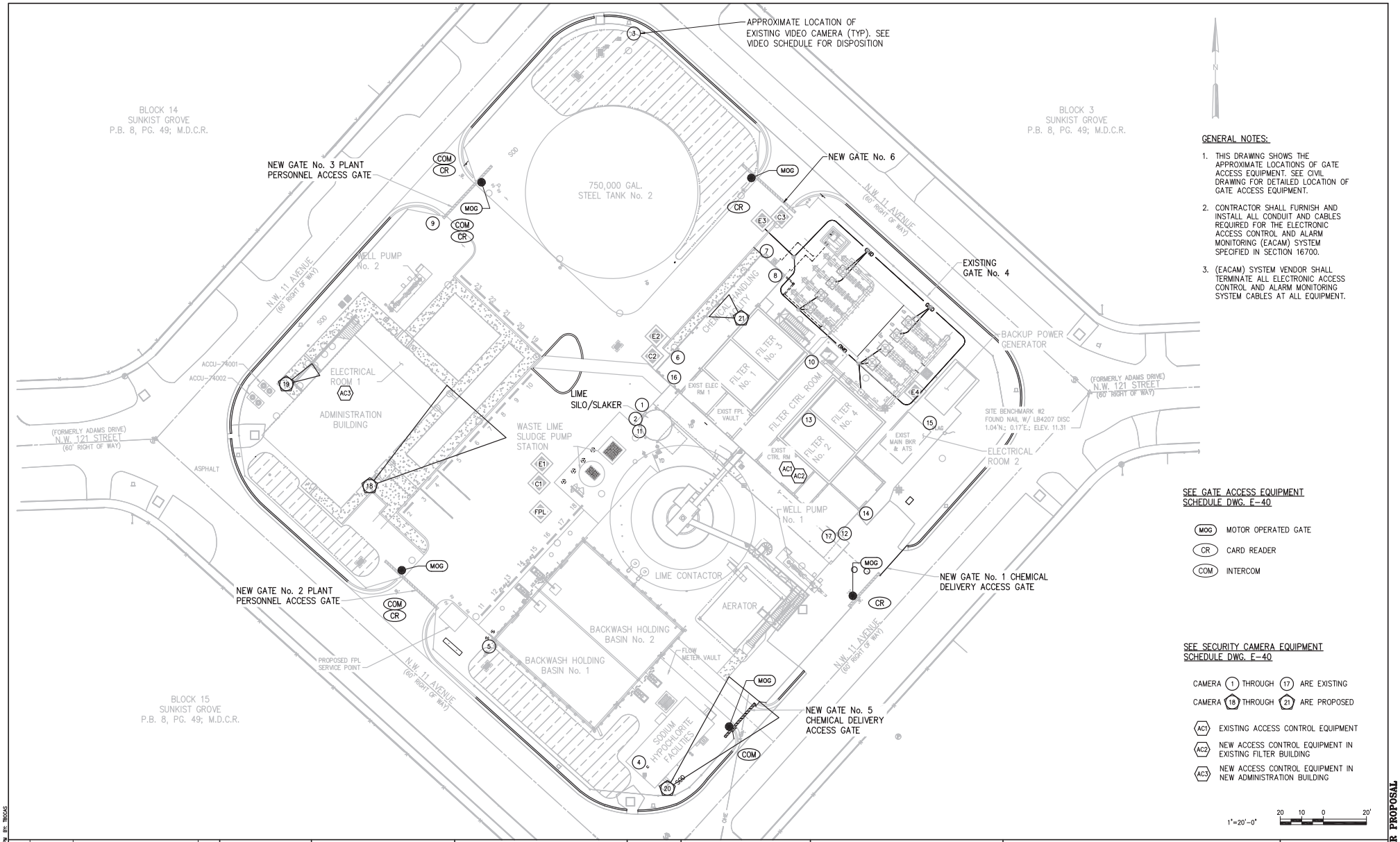

GENERAL NOTES:

1. THIS DRAWING SHOWS THE APPROXIMATE LOCATIONS OF GATE ACCESS EQUIPMENT. SEE CIVIL DRAWING FOR DETAILED LOCATION OF GATE ACCESS EQUIPMENT.
2. CONTRACTOR SHALL FURNISH AND INSTALL ALL CONDUIT AND CABLES REQUIRED FOR THE ELECTRONIC ACCESS CONTROL AND ALARM MONITORING (EACAM) SYSTEM SPECIFIED IN SECTION 16700.
3. (EACAM) SYSTEM VENDOR SHALL TERMINATE ALL ELECTRONIC ACCESS CONTROL AND ALARM MONITORING SYSTEM CABLES AT ALL EQUIPMENT.

SEE GATE ACCESS EQUIPMENT SCHEDULE DWG. E-40

- MOG — MOTOR OPERATED GATE
- CR — CARD READER
- COM — INTERCOM

SEE SECURITY CAMERA EQUIPMENT SCHEDULE DWG. E-40

- CAMERA 1 THROUGH 17 ARE EXISTING
- CAMERA 18 THROUGH 21 ARE PROPOSED

- AC1 — EXISTING ACCESS CONTROL EQUIPMENT
- AC2 — NEW ACCESS CONTROL EQUIPMENT IN EXISTING FILTER BUILDING
- AC3 — NEW ACCESS CONTROL EQUIPMENT IN NEW ADMINISTRATION BUILDING

1"=20'-0" (20 10 0 20')

NO.	DATE	ISSUED FOR	BY
1	07/24/15	REQUEST FOR PROPOSAL	G.A.B.

PLOT DATE: 7/24/2015 4:39 PM BY: TBOCAS

DESIGNED J.M.B.
DRAWN G.P.B.
CHECKED J.C.B.
PROJ. ENGR. J.C.B.

JOHN C. BURKE P.E.
No. 17301

HAZEN AND SAWYER
Environmental Engineers & Scientists
4000 Hollywood Boulevard, Suite 750N
Hollywood, Florida 33021
Certificate of Authorization Number: 2771

SCALE 1"=20'-0"

CLIENTS PROJECT: –
ENGINEERS PROJECT: 44238-004
CAD REFERENCE: 44238-004BP3-E39

NORTH MIAMI FLORIDA
CITY OF NORTH MIAMI
PUBLIC WORKS UTILITIES

WINSON WATER TREATMENT PLANT
RELIABILITY IMPROVEMENTS – VOLUME C: WTP REHAB

SITE SECURITY PLAN

DATE: JULY 2015
SHEET: 278 OF 335
DRAWING: E-39

REQUEST FOR PROPOSAL

File = H:\44238-004\Drawings\design build package\volume c - wtp rehab\Bid Package 3 - WTP Rehab\Electrical\44238-004BP3-E39 Saved by randersen Save date = 6/9/2014 1:26 PM

SECURITY CAMERA SCHEDULE

MARK	CAMERA ID	LOCATION	STATUS	EQUIP NOTES	CONDUIT NOTES	CONDUIT TERMINATION
1	VID 76001	LIME SILO (VIEW OF GATE NO.3)	EXISTING	2	C	FILTERS LOWER FLOOR CTRL RM
2	VID 76002	LIME SILO (MOUNTED AT TOP OF SILO) (PTZ)	EXISTING	1	C	FILTERS LOWER FLOOR CTRL RM
3	VID 76003	4"X4" METAL POST MOUNTED AT N. CORNER OF WTP (VIEW SW) (PTZ)	EXISTING	3	A	ADMIN BLDG CONTROL ROOM
4	VID 76004	4"X4" METAL POST MOUNTED AT S. CORNER OF WTP (VIEW NW) (PTZ)	EXISTING	4	B	FILTERS LOWER FLOOR CTRL RM
5	VID 76005	4"X4" METAL POST MOUNTED AT S. CORNER OF GATE NO.2 (VIEW OF ENTRANCE)	EXISTING	3	A	ADMIN BLDG CONTROL ROOM
6	VID 76006	WALL MOUNTED ON WEST FACE OF CHEM. (AMMONIA) HANDLING FACILITY	EXISTING	2	C	FILTERS LOWER FLOOR CTRL RM
7	VID 76007	WALL MOUNTED ON N. CORNER OF CHEM. FACILITY (VIEW OF HSPS)	EXISTING	2	C	FILTERS LOWER FLOOR CTRL RM
8	VID 76008	WALL MOUNTED WITHIN CHEM. FACILITY (INTERIOR VIEW SOUTH)	EXISTING	2	B	FILTERS LOWER FLOOR CTRL RM
9	VID 76009	4"X4" METAL POST MOUNTED AT S. CORNER OF GATE NO.3 (VIEW OF ENTRANCE)	EXISTING	3	A	ADMIN BLDG CONTROL ROOM
10	VID 76010	EAST FACE OF FILTER NO.3 (VIEW OF DIESEL GENERATOR)	EXISTING	1	C	FILTERS LOWER FLOOR CTRL RM
11	VID 76011	LIME SILO (VIEW OF GATE NO.2)	EXISTING	2	C	FILTERS LOWER FLOOR CTRL RM
12	VID 76012	S.CORNER OF FILTER BLDG (VIEW OF HYPOCHLORITE FACILITIES)	EXISTING	2	C	FILTERS LOWER FLOOR CTRL RM
13	VID 76013	FILTER CONTROL ROOM STAIRWELL DOOR (VIEW OF DOOR)	EXISTING	1	C	FILTERS LOWER FLOOR CTRL RM
14	VID 76014	EAST FACE OF FILTER BLDG (VIEW OF GATE NO.1)	EXISTING	2	C	FILTERS LOWER FLOOR CTRL RM
15	VID 76015	E. FACE OF ELEC. RM 2 (VIEW EAST OF ELEC. RM.2)	EXISTING	2	C	FILTERS LOWER FLOOR CTRL RM
16	VID 76016	S. END OF CHEM. FACILITY (COAGULANT AND ANIT-COAGULANT AREA)	EXISTING	2	B	FILTERS LOWER FLOOR CTRL RM
17	VID 76017	S. CORNER OF FILTER BLDG (VIEW OF FILTER BLDG. BREEZE WAY)	EXISTING	1	C	FILTERS LOWER FLOOR CTRL RM
18	VID 76018	NEW ADMINISTRATION BUILDING VIEW OF FIRST FLOOR FRONT ENTRANCE	PROPOSED	5	A	ADMIN BLDG CONTROL ROOM
19	VID 76019	NEW ADMINISTRATION BUILDING VIEW OF FIRST FLOOR BACK ENTRANCE	PROPOSED	5	A	ADMIN BLDG CONTROL ROOM
20	VID 76020	VIEW OF HYPOCHLORITE BUILDING FILLING STATION FROM HYPOCHLORITE FACILITY WALL	PROPOSED	5	B	FILTERS LOWER FLOOR CTRL RM
21	VID 76021	CENTER (FLUORIDE) OF CHEM. FACILITY (INTERIOR VIEW)	PROPOSED	5	B	FILTERS LOWER FLOOR CTRL RM

GATE SECURITY EQUIPMENT SCHEDULE

GATE NO.	ENTRY PEDESTAL	EXIT PEDESTAL	DESCRIPTION	POWER SOURCE	CONTROL WIRING TO
GATE 1	MOG 77100		MOTOR OPERATED GATE NO. 1	LP9-15	
	CR 77100A	CR 77100B	CARD READER		FILTERS LOWER FLOOR CTRL RM SECURITY ACCESS PANELS
GATE 2	MOG 77200		MOTOR OPERATED GATE NO. 2	LP70-23	
	CR 77200	NA	CARD READER		ADMIN BLDG SECURITY ACCESS PANELS
	COM 77200	NA	INTERCOM		
GATE 3	MOG 77300		MOTOR OPERATED GATE NO. 3	LP70-25	
	CR 77300A	CR 77300B	CARD READER		ADMIN BLDG SECURITY ACCESS PANELS
	COM 77300A	COM 77300B	INTERCOM		
GATE 5	MOG 77500		MOTOR OPERATED GATE NO. 5	LP9-17	
	COM 77500	NA	INTERCOM		FILTERS LOWER FLOOR CTRL RM SECURITY ACCESS PANELS
GATE 6	MOG 77600		MOTOR OPERATED GATE NO. 6	LP70-27	
	NA	CR 77600	CARD READER		ADMIN BLDG SECURITY ACCESS PANELS

VIDEO CAMERA EQUIPMENT CONSTRUCTION NOTES:

1. CONSTRUCTION SHOULD NOT IMPACT THIS CAMERA, CONDUIT OR WIRING
2. CONSTRUCTION MAY IMPACT CURRENT CAMERA, CONDUIT, WIRING OR POLE. THIS WILL REQUIRE THE CONTRACTOR TO DISCONNECT CAMERA AND STORE IN A PROTECTED AREA. CONTRACTOR SHALL PROTECT CONDUIT, WIRING AND POLE DURING CONSTRUCTION AND THEN REINSTALL CAMERA TO SAME POLE WHEN CONSTRUCTION IN AREA IS COMPLETE.
3. RELOCATE EXISTING CAMERA TO A DIFFERENT LOCATION, PROVIDE NEW CONDUIT, WIRING, POLE AND POLE BASE AT NEW LOCATION. WIRING AND CONDUIT SHALL BE NEW BETWEEN CAMERA AND NETWORK EQUIPMENT. THE NEW LOCATION FOR THE EXISTING CAMERA SHALL BE DETERMINED BY THE OWNER DURING CONSTRUCTION TO SUIT FIELD CONDITIONS.
4. DISCONNECT EXISTING CAMERA AND REMOVE POLE. REINSTALL CAMERA ON STRUCTURE TO PROVIDE VIEW OF INTERIOR.
5. NEW CAMERA EQUIPMENT TO BE INSTALLED ON STRUCTURE WALLS

CONDUIT NOTES:

A. NEW CONDUIT TO NEW ADMINISTRATION BUILDING AC3
B. NEW CONDUIT TO EXISTING FILTER BUILDING CONTROL ROOM AC2 AC3
C. EXISTING CONDUIT TO EXISTING FILTER BUILDING CONTROL ROOM AC1

GENERAL NOTES:

1. SEE SITE SECURITY DRAWING E-39 FOR LOCATIONS
2. CONTRACTOR SHALL PROVIDE AND INSTALL NEW POWER AND CONTROL CONDUITS WITH ASSOCIATED WIRING BETWEEN ALL 5 MOTOR OPERATED SITE ACCESS GATES AND ASSOCIATED POWER AND CONTROL EQUIPMENT AS INDICATED IN THE GATE SECURITY EQUIPMENT SCHEDULE ON THIS DRAWING.

NO.	DATE	ISSUED FOR	BY
1	07/24/15	REQUEST FOR PROPOSAL	G.A.B.

DESIGNED J.M.B.
DRAWN H.F.M.
CHECKED J.C.B.
PROJ. ENGR. J.C.B.

JOHN C. BURKE P.E.
No. 17301

HAZEN AND SAWYER
Environmental Engineers & Scientists
4000 Hollywood Boulevard, Suite 750N
Hollywood, Florida 33021
Certificate of Authorization Number: 2771

SCALE NTS

CLIENTS PROJECT: –
ENGINEERS PROJECT: 44238-004
CAD REFERENCE: 44238-004BP3-E40

NORTH MIAMI FLORIDA
CITY OF NORTH MIAMI
PUBLIC WORKS UTILITIES

WINSON WATER TREATMENT PLANT
RELIABILITY IMPROVEMENTS – VOLUME C: WTP REHAB
SECURITY SCHEDULES

DATE: JULY 2015
SHEET: 279 OF 335
DRAWING: E-40

REQUEST FOR PROPOSAL

PLOT DATE: 7/24/2015 4:39 PM BY: TBLOCAS
XREFs= ..\Tblock\44238-004-BP3-TB
File = H:\44238-004\Drawings\design build package\volume c - wtp rehab\Bid Package 3 - WTP Rehab\Electrical\44238-004BP3-E40 Saved by jbroad Save date = 12/20/2013 11:16 AM

PANEL LP70		ADMINISTRATION BUILDING MAIN ELECTRIC ROOM												MAIN LUGS	
225A,208Y/120V,3PH,4W		VA LOAD			WIRE/CONDUIT	C.B.			C.B.	WIRE/CONDUIT	VA LOAD				
NO.	USE	A	B	C	QTY SIZE	TRIP	P		P	TRIP	QTY SIZE	A	B	C	USE	NO.
1	R112 RECP	180			2#12,1#12G,3/4C	20	1		1	20	2#12,1#12G,3/4C	180			R112 LTG	2
3	R112 RECP		180		2#12,1#12G,3/4C	20	1		1	20	2#12,1#12G,3/4C		180		R104,111	4
5	R112 RECP TELE			360	2#12,1#12G,3/4C	20	1		1	20	2#12,1#12G,3/4C			180	LIGHTING CONTROLLER	6
7	OUTSIDE RECP	720			2#12,1#12G,3/4C	20	1		1	30	3#10,1#12G,3/4C	900			SITE LIGHTING	8
9	OUTSIDE RECP		200		2#12,1#12G,3/4C	20	1		1	30	3#10,1#12G,3/4C		1400		SITE LIGHTING	10
11	OUTSIDE A/C RECP			360	2#12,1#12G,3/4C	20	1		1	30	3#10,1#12G,3/4C			1400	SITE LIGHTING	12
13	FIRE ALARM PANEL	180			2#12,1#12G,3/4C	20	1		1	20	2#12,1#12G,3/4C	180			FIT 11002	14
15	PLC-70000		1600		2#12,1#12G,3/4C	20	1		1	20	2#12,1#12G,3/4C		180		LIT 11002	16
17	R105 RECP			180	2#12,1#12G,3/4C	20	1		1	20	2#12,1#12G,3/4C			180	SHUNT TRIP BK GLASS	18
19	R113 ELEV	180			2#12,1#12G,3/4C	20	1		1	20	2#12,1#12G,3/4C	1800			IRRIGATION CONTROLS	20
21	R113 ELEV SP ESP-75100 1/2HP		1200		2#12,1#12G,3/4C	20	1		1	20			180		SPARE	22
23	MOG 77200			1400	2#12,1#12G,3/4C	20	1		1	20				180	SPARE	24
25	MOG 77300	1400			2#12,1#12G,3/4C	20	2		1	20		180			SPARE	26
27	MOG 77600		1400		2#12,1#12G,3/4C	20			1	20			180		SPARE	28
29	R105 ACCU 74012			4200	2#10,1#10G,3/4C	30	2		1	20				180	SPARE	30
31		4200							1	20		180			SPARE	32
33	R105 AC 74012		5000		2#8,1#10G,3/4C	30	2		1	20			180		SPARE	34
35				5000					1	20				180	SPARE	36
37	R104 PTHP 74013	3000			2#12,1#12G,3/4C	20	2		1	20		180			SPARE	38
39			3000						1	20			180		SPARE	40
41				180		20	1		1	20				180	SPARE	42
		6860	4580	6500								3420	2120	2120		
		0	0	0							TOTAL DEMAND LOAD	10280	6700	8620	25600	

PANEL LP71		ADMINISTRATION BUILDING FIRST FLOOR												MAIN LUGS	
225A,208Y/120V,3PH,4W		VA LOAD			WIRE/CONDUIT	C.B.			C.B.	WIRE/CONDUIT	VA LOAD				
NO.	USE	A	B	C	QTY SIZE	TRIP	P		P	TRIP	QTY SIZE	A	B	C	USE	NO.
1	EOC OFFICE 108 RECP	1080			2#12,1#12G,3/4C	20	1		1	20	2#12,1#12G,3/4C	180			R109 LTG	2
3	EOC AREA 109 RECP		1080		2#12,1#12G,3/4C	20	1		1	20	2#12,1#12G,3/4C		180		R108,109 LTG	4
5	EOC AREA 109 RECP			900	2#12,1#12G,3/4C	20	1		1	20	2#12,1#12G,3/4C			180	R101, 102 LTG	6
7	EOC AREA 109 RECP	720			2#12,1#12G,3/4C	20	1		1	20	2#12,1#12G,3/4C	900			R102,105,106,107 LTG	8
9	EOC AREA 109 RECP		720		2#12,1#12G,3/4C	20	1		1	20	2#12,1#12G,3/4C		180		R103 LTG	10
11	EOC AREA 109 RECP			720	2#12,1#12G,3/4C	20	1		1	20	2#12,1#12G,3/4C			180	R100 LTG	12
13	EOC AREA 109 RECP	720			2#12,1#12G,3/4C	20	1		1	20	2#12,1#12G,3/4C	180			R108 SECURITY PNL3	14
15	SPARE		180		2#12,1#12G,3/4C	20	1		1	20	2#12,1#12G,3/4C		180		R108 SECURITY PNL4	16
17	SPARE			180	2#12,1#12G,3/4C	20	1		1	20	2#12,1#12G,3/4C			180	R110 FIRE RELAY PNL	18
19	R100, 101, 102 RECP	540			2#12,1#12G,3/4C	20	1		1	20		180			R104,111	20
21	EWC-75301		360		2#12,1#12G,3/4C	20	1		1	20			180		SPARE	22
23	R103, 106, 107 RECP			900	2#12,1#12G,3/4C	20	1		1	20				180	SPARE	24
25	SPARE	180				30	2		1	20		180			SPARE	26
27	SPARE		180						1	20			180		SPARE	28
29	SPARE			180		20	1		1	20				180	SPARE	30
31	SPARE	180				20	1		1	20		180			SPARE	32
33	HWH-76202 6kW		6000		2#8,1#10G,3/4C	40	2		1	20			180		SPARE	34
35				6000					1	20				180	SPARE	36
37	SPARE	180				20	1		1	20		180			SPARE	38
39	LCP-75100		180		2#12,1#12G,3/4C	20	1		1	20			180		SPARE	40
41	SPARE			180		20	1		1	20				180	SPARE	42
		3420	2520	2880								1800	900	900		
		0	0	0							TOTAL DEMAND LOAD	5220	3420	3780	12420	

PANEL LP72A		ADMINISTRATION BUILDING SECOND FLOOR												MAIN LUGS	
225A,208Y/120V,3PH,4W		VA LOAD			WIRE/CONDUIT	C.B.			C.B.	WIRE/CONDUIT	VA LOAD				
NO.	USE	A	B	C	QTY SIZE	TRIP	P		P	TRIP	QTY SIZE	A	B	C	USE	NO.
1	OFFICE R209 RECP	900			2#12,1#12G,3/4C	20	1		1	20	2#12,1#12G,3/4C	720			EF-74003 1/4HP	2
3	OFFICE R208 RECP		720		2#12,1#12G,3/4C	20	1		1	20	2#12,1#12G,3/4C		480		EF-74004 1/8HP	4
5	R204, 205, 206, 207 RECP			720	2#12,1#12G,3/4C	20	1		1	20	2#12,1#12G,3/4C			480	EF-74005 1/8HP	6
7	OFFICE 201 RECP	720			2#12,1#12G,3/4C	20	1		1	20	2#12,1#12G,3/4C	480			EF-74006 1/8HP	8
9	R200 RECP		540		2#12,1#12G,3/4C	20	1		1	20	2#12,1#12G,3/4C		180		ROOF RECEPTACLES	10
11	R200 REFRIG			360	2#12,1#12G,3/4C	20	1		1	20	2#12,1#12G,3/4C			540	OBSERVATION DECK GFI RECP	12
13	R200 MICROWAVE	1200			2#12,1#12G,3/4C	20	1		1	20		180			SPARE	14
15	R200 GFI RECP		360		2#12,1#12G,3/4C	20	1		1	20			180		SPARE	16
17	R200 GFI RECP			180	2#12,1#12G,3/4C	20	1		1	20				180	SPARE	18
19	R200 VENDING RECP	540			2#12,1#12G,3/4C	20	1		1	20		180			SPARE	20
21	R200 VENDING RECP		540		2#12,1#12G,3/4C	20	1		1	20			180		SPARE	22
23	HWH-76201 2.5kW			2500	2#12,1#12G,3/4C	20	2		1	20				180	SPARE	24
25		2500							1	20		180			SPARE	26
27	HWH-76203 6kW		6000		2#8,1#10G,3/4C	40	2		1	20			180		SPARE	28
29				6000					1	20				180	SPARE	30
31	R204 RECP	180			2#12,1#12G,3/4C	20	1		1	20		180			SPARE	32
33	EWC-75302		360		2#12,1#12G,3/4C	20	1		1	20			180		SPARE	34
35	R202,203,210 LTG			1200	2#12,1#12G,3/4C	20	1		1	20				180	SPARE	36
37	R208,209 LTG	1200			2#12,1#12G,3/4C	20	1		1	20		180			SPARE	38
39	R204,205,206,207 LTG		1200		2#12,1#12G,3/4C	20	1		1	20			180		SPARE	40
41	R200,201,210 LTG			1200	2#12,1#12G,3/4C	20	1		1	20				180	SPARE	42
		6040	8160	9760								1920	1200	1560		
		0	0	0							TOTAL DEMAND LOAD	7960	9360	11320	28640	

PANEL LP72B		ADMINISTRATION BUILDING SECOND FLOOR												MAIN LUGS	
225A,208Y/120V,3PH,4W		VA LOAD			WIRE/CONDUIT	C.B.			C.B.	WIRE/CONDUIT	VA LOAD				
NO.	USE	A	B	C	QTY SIZE	TRIP	P		P	TRIP	QTY SIZE	A	B	C	USE	NO.
1	R210 SERVER	720			2#12,1#12G,3/4C	20	1		1	20	2#12,1#12G,3/4C	180			R203 LAB RECP	2
3	R210 SERVER		720		2#12,1#12G,3/4C	20	1		1	20	2#12,1#12G,3/4C		180		R203 LAB RECP	4
5	R210 SERVER			720	2#12,1#12G,3/4C	20	1		1	20	2#12,1#12G,3/4C			180	R203 LAB RECP	6
7	R210 SERVER	720			2#12,1#12G,3/4C	20	1		1	20	2#12,1#12G,3/4C	180			R203 LAB RECP	8
9	R210 SECURITY DESK		180		2#12,1#12G,3/4C	20	1		1	20	2#12,1#12G,3/4C		180		R203 LAB RECP	10
11	R210 OPER CONSOLE			180	2#12,1#12G,3/4C	20	1		1	20	2#12,1#12G,3/4C			180	R203 LAB RECP	12
13	R210 OPER CONSOLE	180			2#12,1#12G,3/4C	20	1		1	20	2#12,1#12G,3/4C	180			R203 LAB RECP	14
15	R210 OPER CONSOLE		180		2#12,1#12G,3/4C	20	1		1	20	2#12,1#12G,3/4C		180		R203 LAB RECP	16
17	R210 OPER CONSOLE			180	2#12,1#12G,3/4C	20	1		1	20	2#12,1#12G,3/4C			180	R203 LAB RECP	18
19	R210 OPER CONSOLE	180			2#12,1#12G,3/4C	20	1		1	20	2#12,1#12G,3/4C	180			R203 LAB RECP	20
21	R210 OPER CONSOLE		180		2#12,1#12G,3/4C	20	1		1	20	2#12,1#12G,3/4C		180		R203 LAB RECP	22
23	R210 OPER CONSOLE			180	2#12,1#12G,3/4C	20	1		1	20	2#12,1#12G,3/4C			180	R203 LAB RECP	24
25	R210 AUX DESK	360			2#12,1#12G,3/4C	20	1		1	20	2#12,1#12G,3/4C	180			R203 FS-76100	26
27	R210 LCP-74100 ACP		360		2#12,1#12G,3/4C	20	1		1	20			180		SPARE	28
29	R210 RECP			360	2#12,1#12G,3/4C	20	1		1	20				180	SPARE	30
31	VOICE PATCH PNL	180			2#12,1#12G,3/4C	20	1		1	20		180			SPARE	32
33	SPARE		180			20	1		1	20			180		SPARE	34
35	SPARE			180		20	1		1	20				180	SPARE	36
37	SPARE	180				20	1		1	20		180			SPARE	38
39	SPARE		180			20	1		1	20			180		SPARE	40
41	SPARE			180		20	1		1	20				180	SPARE	42
		2340	1620	1620								1080	900	900		
		0	0	0							TOTAL DEMAND LOAD	3420	2520	2520	8460	

NO.	DATE	ISSUED FOR	BY
1	07/24/15	REQUEST FOR PROPOSAL	G.A.B.

DESIGNED J.M.B.
DRAWN J.M.B.
CHECKED J.C.B.
PROJ. ENGR. J.C.B.

JOHN C. BURKE P.E.
No. 17301

HAZEN AND SAWYER
Environmental Engineers & Scientists
4000 Hollywood Boulevard, Suite 750N
Hollywood, Florida 33021
Certificate of Authorization Number: 2771

SCALE NA

CLIENTS PROJECT: –
ENGINEERS PROJECT: 44238-004
CAD REFERENCE: 44238-004BP3-E41

NORTH MIAMI FLORIDA
CITY OF NORTH MIAMI
PUBLIC WORKS UTILITIES

WINSON WATER TREATMENT PLANT
RELIABILITY IMPROVEMENTS – VOLUME C: WTP REHAB

PANEL SCHEDULES
ADMINISTRATION BUILDING

DATE: JULY 2015
SHEET: 280 OF 335
DRAWING: E-41

REQUEST FOR PROPOSAL

PLOT DATE: 7/24/2015 4:39 PM BY: TBOCAS
XREFs= ..\Tblock\44238-004-BP3-TB
File = H:\44238-004\Drawings\design build package\volume c - wtp rehab\Bid Package 3 - WTP Rehab\Electrical\44238-004BP3-E41 Saved by tbocas Save date = 5/27/2015 10:39 AM

EXISTING DISTRIBUTION PANELBOARD	CKT. NO.	LOAD DESCRIPTION	CONNECTED LOAD	UNITS	CIRCUIT BREAKER			WIRE		RACE WAY	LOCATION: ELECTRIC ROOM 1
DP1					POLE	FRAME	TRIP	SETS	QTY/SIZE	SIZE	REMARKS
600A BUS 480V 3φ, 3W+GND 65,000 AIC	1	PANELBOARD P1	60	kVA	3	250	150	1	(3) 3/0, (1) #6G	2	NEW IN BID PACKAGE No.1
	2	PANELBOARD P2	76	kVA	3	250	150	1	(3) 3/0, (1) #6G	2	NEW IN BID PACKAGE No.1
MAIN LUGS ONLY	3	TRANSFORMER Tx3	30	kVA	3	40	40	1	(3) #8, (1) #10G	1	FEEDS LP-4, LP-5
FED FROM: MCC-2 3P-600A	4	TRANSFORMER Tx1	150	kVA	3	250	200	1	(3) 4/0, (1) #6G	2	FEEDS DP-2
	5	PANELBOARD P3	95	kVA	3	250	200	1	(3) 4/0, (1) #6G	2	
	6	SPARE			3	100	30				
	7	SPACE									
	8	SPACE									
CONNECTED LOAD:			411	kVA							
			495	AMPS							

NEW DISTRIBUTION PANELBOARD	CKT. NO.	LOAD DESCRIPTION	CONNECTED LOAD	UNITS	CIRCUIT BREAKER			WIRE		RACE WAY	LOCATION ELECTRIC ROOM 1
DP2					POLE	FRAME	TRIP	SETS	QTY/SIZE	SIZE	REMARKS
400A BUS 208Y/120V 3φ, 4W+G 65,000 AIC	1	PANELBOARD LP1	41	kVA	3	200	200	1	(3) 3/0, (1) #6G	2	
	2	PANELBOARD LP2	19	kVA	3	100	60	1	(3) 3/0, (1) #6G	2	
MAIN LUGS ONLY	3	PANELBOARD LP3	25	kVA	3	100	20	1	(3) #8, (1) #10G	1	
FED FROM: XMER Tx1 112.5kVA	4	PANELBOARD LP8	46	kVA	3	150	150	1	(3) 3/0, (1) #6G	2	
	5	PANELBOARD LP9	18	kVA	3	100	100	1	(3) 2, (1) #8G	2	
	6	SPARE			3	100	20				
	7	SPACE									
	8	SPACE									
CONNECTED LOAD:			149	kVA							
			179	AMPS							

NEW DISTRIBUTION PANELBOARD	CKT. NO.	LOAD DESCRIPTION	CONNECTED LOAD	UNITS	CIRCUIT BREAKER			WIRE		RACE WAY	LOCATION: MAIN ELECTRIC ROOM
DP3					POLE	FRAME	TRIP	SETS	QTY/SIZE	SIZE	REMARKS
400A BUS 208Y/120V 3φ, 3W+GND 65,000 AIC	1	PANEL LP70	14	kVA	3	200	150	1	(3) 3/0, (1) #6G	2	
	2	PANEL LP71	10	kVA	3	200	150	1	(3) 3/0, (1) #6G	2	
MAIN LUGS ONLY	3	PANEL LP72A	27	kVA	3	200	150	1	(3) #8, (1) #10G	1	
FED FROM: MCC-1 VIA 150kVA Tx5	4	PANEL LP72B	12	kVA	3	200	150	1	(3) 4/0, (1) #6G	2	
	5	SPARE			3	100	60				
	6	SPARE			3	100	20				
CONNECTED LOAD:			63	kVA							
			76	AMPS							

NO.	DATE	ISSUED FOR	BY
1	07/24/15	REQUEST FOR PROPOSAL	G.A.B.

DESIGNED J.M.B.
DRAWN J.M.B.
CHECKED J.C.B.
PROJ. ENGR. J.C.B.

JOHN C. BURKE P.E.
No. 17301

HAZEN AND SAWYER
Environmental Engineers & Scientists
4000 Hollywood Boulevard, Suite 750N
Hollywood, Florida 33021
Certificate of Authorization Number: 2771

SCALE NA

CLIENTS PROJECT: –
ENGINEERS PROJECT: 44238-004
CAD REFERENCE: 44238-004BP3-E42

CITY OF NORTH MIAMI
PUBLIC WORKS UTILITIES

WINSON WATER TREATMENT PLANT
RELIABILITY IMPROVEMENTS – VOLUME C: WTP REHAB
PANEL SCHEDULES
PROCESS AREA
SHEET 1

DATE: JULY 2015
SHEET: 281 OF 335
DRAWING: E-42

REQUEST FOR PROPOSAL

PLOT DATE: 7/24/2015 4:39 PM BY: TBOCAS
XREFs= ..\Tblock\44238-004-BP3-TB
File = H:\44238-004\Drawings\design build package\volume c - wtp rehab\Bid Package 3 - WTP Rehab\Electrical\44238-004BP3-E42 Saved by jbroad Save date = 12/27/2013 9:45 AM

EXISTING PANEL P1		LOCATED IN FILTER PIPE GALLERY													MAIN LUGS	
225A, 480V, 3PH, 3W		VA LOAD			WIRE/CONDUIT	C.B.			C.B.		WIRE/CONDUIT	VA LOAD			NEMA 4X WALL MOUNT	
NO.	USE	A	B	C	QTY SIZE	TRIP	POLE		POLE	TRIP	QTY SIZE	A	B	C	USE	NO.
1	MOV 31001 FILTER 1 INFLUENT	1400			3#12,1#12G,3/4C	20	3		3	20	3#12,1#12G,3/4C	1400			MOV 33001 FILTER 3 INFLUENT	2
3			1400										1400			4
5				1400										1400		6
7	MOV 31002 FILTER 1 BACKWASH SUPPLY	1400			3#12,1#12G,3/4C	20	3		3	20	3#12,1#12G,3/4C	1400			MOV 33002 FILTER 3 BACKWASH SUPPLY	8
9			1400										1400			10
11				1400										1400		12
13	MOV 31003 FILTER 1 DRAIN	1400			3#12,1#12G,3/4C	20	3		3	20	3#12,1#12G,3/4C	1400			MOV 33003 FILTER 3 DRAIN	14
15			1400										1400			16
17				1400										1400		18
19	MOV 31004 FILTER 1 WASTE BACKWASH	1400			3#12,1#12G,3/4C	20	3		3	20	3#12,1#12G,3/4C	1400			MOV 33004 FILTER 3 WASTE BACKWASH	20
21			1400										1400			22
23				1400										1400		24
25	MOV 31005 FILTER 1 SURFACE WASH	1400			3#12,1#12G,3/4C	20	3		3	20	3#12,1#12G,3/4C	1400			MOV 33005 FILTER 3 SURFACE WASH	26
27			1400										1400			28
29				1400										1400		30
31	MOV 31006 FILTER 1 FLOW CONTROL	1400			3#12,1#12G,3/4C	20	3		3	20	3#12,1#12G,3/4C	1400			MOV 33006 FILTER 3 FLOW CONTROL	32
33			1400										1400			34
35				1400										1400		36
37	MOV 30000 SURFACE SCOUR THROTTLING	1400			3#12,1#12G,3/4C	20	3		3	20	3#12,1#12G,3/4C	1400			MOV 30001 BACKWASH PUMP DISCH	38
39			1400										1400			40
41				1400										1400		42
		9800	9800	9800								9800	9800	9800		
		0	0	0							TOTAL DEMAND	19600	19600	19600	58800	

EXISTING PANEL P2		LOCATED IN FILTER PIPE GALLERY													MAIN LUGS	
225A, 480V, 3PH, 3W		VA LOAD			WIRE/CONDUIT	C.B.			C.B.		WIRE/CONDUIT	VA LOAD			NEMA 4X WALL MOUNT	
NO.	USE	A	B	C	QTY SIZE	TRIP	POLE		POLE	TRIP	QTY SIZE	A	B	C	USE	NO.
1	MOV 32001 FILTER 2 INFLUENT	1400			3#12,1#12G,3/4C	20	3		3	20	3#12,1#12G,3/4C	1400			MOV 34001 FILTER 4 INFLUENT	2
3			1400										1400			4
5				1400										1400		6
7	MOV 32002 FILTER 2 BACKWASH SUPPLY	2000			3#12,1#12G,3/4C	20	3		3	20	3#12,1#12G,3/4C	1400			MOV 34002 FILTER 4 BACKWASH SUPPLY	8
9			2000										1400			10
11				2000										1400		12
13	MOV 32003 FILTER 2 DRAIN	1400			3#12,1#12G,3/4C	20	3		3	20	3#12,1#12G,3/4C	1400			MOV 34003 FILTER 4 DRAIN	14
15			1400										1400			16
17				1400										1400		18
19	MOV 32004 FILTER 2 WASTE BACKWASH	1400			3#12,1#12G,3/4C	20	3		3	20	3#12,1#12G,3/4C	1400			MOV 34004 FILTER 4 WASTE BACKWASH	20
21			1400	1400									1400			22
23				1400										1400		24
25	MOV 32005 FILTER 2 SURFACE WASH	1400			3#12,1#12G,3/4C	20	3		3	20	3#12,1#12G,3/4C	1400			MOV 34005 FILTER 4 SURFACE WASH	26
27			1400										1400			28
29				1400										1400		30
31	MOV 32006 FILTER 2 FLOW CONTROL	1400			3#12,1#12G,3/4C	20	3		3	20	3#12,1#12G,3/4C	1400			MOV 34006 FILTER 4 FLOW CONTROL	32
33			1400										1400			34
35				1400										1400		36
37	CMPR 73100 AIR COMPRESSOR	1400			3#12,1#12G,3/4C	20	3		3	20	3#8,1#10G,1C	6000			30kVA LIGHTING TRANSFORMER	38
39			1400										6000			40
41				1400										6000		42
		10400	10400	11800								14400	14400	14400		
		0	0	0							TOTAL DEMAND	24800	24800	26200	75800	

EXISTING PANEL LP7		LOCATED IN FILTER PIPE GALLERY													MAIN LUGS	
225A,208Y/120V,3PH,4W		VA LOAD			WIRE/CONDUIT	C.B.			C.B.		WIRE/CONDUIT	VA LOAD			NEMA 4X WALL MOUNT	
NO.	USE	A	B	C	QTY SIZE	TRIP	POLE		POLE	TRIP	QTY SIZE	A	B	C	USE	NO.
1	PIPE GALLERY LIGHTING	700			2#12,1#12G,3/4C	20	1		1	20	2#12,1#12G,3/4C	180			FIT 31000	2
3	RECEPTACLES		720		2#12,1#12G,3/4C	20	1		1	20	2#12,1#12G,3/4C		180		FIT 32000	4
5	FILTERS-WALL PACKS			200	2#12,1#12G,3/4C	20	1		1	20	2#12,1#12G,3/4C			180	FIT 33000	6
7	VENTILATOR	720			2#12,1#12G,3/4C	20	1		1	20	2#12,1#12G,3/4C	180			FIT 34000	8
9	PIPE GALLERY LIGHTING		200		2#12,1#12G,3/4C	20	1		1	20			180		AE/AIT 31000	10
11	RECEPTACLES			360	2#12,1#12G,3/4C	20	1		1	20	2#12,1#12G,3/4C			180	AE/AIT 32000	12
13	SPARE	360				20	1		1	20		180			AE/AIT 33000	14
15	CAP-56200 (ICA)		360		2#12,1#12G,3/4C	20	1		1	20			180		AE/AIT 34000	16
17	CAP-56200 (ICA)			360	2#12,1#12G,3/4C	20	1		1	20	2#12,1#12G,3/4C			180	AE/AIT 43000	18
19	MIX-56201 (ICA)	720			2#12,1#12G,3/4C	20	1		1	20	2#12,1#12G,3/4C	180			LE/LT 31000	20
21	FLP-56300 (ICA)		360		2#12,1#12G,3/4C	20	1		1	20	2#12,1#12G,3/4C		180		LE/LT 32000	22
23	FWI-56300 (ICA)			180	2#12,1#12G,3/4C	20	1		1	20	2#12,1#12G,3/4C			180	LE/LT 33000	24
25	CONV OUTLET (ICA)	180			2#12,1#12G,3/4C	20	1		1	20	2#12,1#12G,3/4C	180			LE/LT 34000	26
27	FS 56000 (ICA)		180		2#12,1#12G,3/4C	20	1		1	20			180		SPARE	28
29	SPARE			180		20	1		1	20				180	SPARE	30
31	SPARE	180				20	1		1	20		180			SPARE	32
33	SPARE		180			20	1		1	20			180		SPARE	34
35	SPARE			180		20	1		1	20				180	SPARE	36
37	SPARE	180				20	1		1	20		180			SPARE	38
39	SPARE		180			20	1		1	20			180		SPARE	40
41	SPARE			180		20	1		1	20				180	SPARE	42
		2860	1820	1280								1080	900	900		
	(ICA) = INTERIM CHEM	0	0	0							TOTAL DEMAND LOAD	3940	2720	2180	8840	

PANEL P3		LOCATED IN FILTER BLDG ELEC RM 1													MAIN LUGS	
225A, 480V, 3PH, 3W		VA LOAD			WIRE/CONDUIT	C.B.			C.B.		WIRE/CONDUIT	VA LOAD			NEMA 4X WALL MOUNT	
NO.	USE	A	B	C	QTY SIZE	TRIP	POLE		POLE	TRIP	QTY SIZE	A	B	C	USE	NO.
1	MOV 22001 LIME CONTACTOR SLUDGE WASTING BLOW OFF VALVE 1	1400			3#12,1#12G,3/4C	20	3		3	60	3#6,1#10G,1C	12000			LCP 60000 WASTE LIME SLUDGE PS	2
3			1400										12000			4
5				1400										12000		6
7	MOV 22002 LIME CONTACTOR SLUDGE WASTING BLOW OFF VALVE 2	1400			3#12,1#12G,3/4C	20	3		3	30	3#10,1#12G,3/4C	5500			PLC 23100	8
9			1400										5500			10
11				1400										5500		12
13	MOV 22003 LIME CONTACTOR SLUDGE WASTING BLOW OFF VALVE 3	1400			3#12,1#12G,3/4C	20	3		3	30	3#10,1#12G,3/4C	5500			PLC 23200	14
15			1400										5500			16
17				1400										5500		18
19	MOV 22004 LIME CONTACTOR SLUDGE WASTING BLOW OFF VALVE 4	1400			3#12,1#12G,3/4C	20	3		3	20					SPARE	20
21			1400													22
23				1400												24
25	MOV 22005 LIME CONTACTOR CENTER DRAIN VALVE	1400			3#12,1#12G,3/4C	20	3		3	20					SPARE	26
27			1400													28
29				1400												30
31	SPARE	1400				20	3		3	20					SPARE	32
33			1400													34
35				1400												36
37	SPARE					20	3		3	20					SPARE	38
39																40
41																42
		8400	8400	8400								23000	23000	23000		
		0	0	0							TOTAL DEMAND	31400	31400	31400	94200	

NO.	DATE	ISSUED FOR	BY
1	07/24/15	REQUEST FOR PROPOSAL	G.A.B.

DESIGNED J.M.B.
DRAWN J.M.B.
CHECKED J.C.B.
PROJ. ENGR. J.C.B.

JOHN C. BURKE P.E.
No. 17301

HAZEN AND SAWYER
Environmental Engineers & Scientists
4000 Hollywood Boulevard, Suite 750N
Hollywood, Florida 33021
Certificate of Authorization Number: 2771

SCALE NA

CLIENTS PROJECT: –
ENGINEERS PROJECT: 44238-004
CAD REFERENCE: 44238-004BP3-E43

NORTH MIAMI FLORIDA
CITY OF NORTH MIAMI
PUBLIC WORKS UTILITIES

WINSON WATER TREATMENT PLANT
RELIABILITY IMPROVEMENTS – VOLUME C: WTP REHAB
PANEL SCHEDULES
PROCESS AREA
SHEET 2

DATE: JULY 2015
SHEET: 282 OF 335
DRAWING: E-43

REQUEST FOR PROPOSAL

PLOT DATE: 7/24/2015 4:40 PM BY: TBLOAS
XREFs= ..\Tblock\44238-004-BP3-TB
File = H:\44238-004\Drawings\design build package\volume c - wtp rehab\Bid Package 3 - WTP Rehab\Electrical\44238-004BP3-E43 Saved by jbroad Save date = 4/14/2014 1:59 PM

EXISTING PANEL LP1		EXISTING FILTER BLDG 1ST FL ELEC ROOM													MAIN LUGS	
225A,208Y/120V,3PH,4W		VA LOAD			WIRE/CONDUIT	C.B.			C.B.		WIRE/CONDUIT	VA LOAD				
NO.	USE	A	B	C	QTY SIZE	TRIP	P		P	TRIP	QTY SIZE	A	B	C	USE	NO.
1	LIME SLAKER VIB PNL	720			2#12,1#12G,3/4C	20	1		1	20	2#12,1#12G,3/4C	180			INTERIOR LIGHTING	2
3	EXISTING CIRCUIT		180			20	1		1	20	2#12,1#12G,3/4C		180		RECEPTACLES	4
5	EXISTING CIRCUIT			180		20	1		1	20				180	EXISTING CIRCUIT	6
7	EXISTING CIRCUIT	180				20	1		1	20		180			EXISTING CIRCUIT	8
9	EXISTING CIRCUIT		180			20	1		1	20			180		EXISTING CIRCUIT	10
11	EXISTING CIRCUIT			180		20	1		1	20				180	EXISTING CIRCUIT	12
13	EXISTING CIRCUIT	180				20	1		1	20		180			EXISTING CIRCUIT	14
15	EXISTING CIRCUIT		180			20	1		1	20			180		EXISTING CIRCUIT	16
17	EXISTING CIRCUIT			180		20	1		1	20				180	EXISTING CIRCUIT	18
19	EXISTING CIRCUIT	180				20	1		1	20		180			EXISTING CIRCUIT	20
21	EXISTING CIRCUIT		180			20	1		1	20			180		EXISTING CIRCUIT	22
23	EXISTING CIRCUIT			180		20	1		1	20				180	EXISTING CIRCUIT	24
25	EXISTING CIRCUIT	180				20	1		1	20		180			EXISTING CIRCUIT	26
27	EXISTING CIRCUIT		180			20	1		1	20			180		EXISTING CIRCUIT	28
29	EXISTING CIRCUIT			180		20	1		1	20				180	EXISTING CIRCUIT	30
31	EXISTING CIRCUIT	180				20	1		1	20		180			EXISTING CIRCUIT	32
33	EXISTING CIRCUIT		180			20	1		1	20			180		EXISTING CIRCUIT	34
35	EXISTING CIRCUIT			180		20	1		1	20				180	EXISTING CIRCUIT	36
37	EXISTING CIRCUIT	180				20	1		1	20		180			EXISTING CIRCUIT	38
39	EXISTING CIRCUIT		180			20	1		1	20			180		EXISTING CIRCUIT	40
41	EXISTING CIRCUIT			180		20	1		1	20				180	EXISTING CIRCUIT	42
		1620	900	900								1080	900	900		
		0	0	0							TOTAL DEMAND LOAD	2700	1800	1800	6300	

EXISTING PANEL LP2		EXISTING FILTER BLDG 2ND FL CONTROL ROOM													MAIN LUGS	
225A,208Y/120V,3PH,4W		VA LOAD			WIRE/CONDUIT	C.B.			C.B.		WIRE/CONDUIT	VA LOAD				
NO.	USE	A	B	C	QTY SIZE	TRIP	P		P	TRIP	QTY SIZE	A	B	C	USE	NO.
1	EXISTING CIRCUIT	180			2#12,1#12G,3/4C	20	1		1	20	2#12,1#12G,3/4C	180			INTERIOR LIGHTING	2
3	EXISTING CIRCUIT		180		2#12,1#12G,3/4C	20	1		1	20	2#12,1#12G,3/4C		180		EXTERIOR LIGHTING	4
5	EXISTING CIRCUIT			180	2#12,1#12G,3/4C	20	1		1	20	2#12,1#12G,3/4C			180	RECEPTACLES	6
7	EXISTING CIRCUIT	180			2#12,1#12G,3/4C	20	1		1	20	2#12,1#12G,3/4C	180			RECEPTACLES	8
9	EXISTING CIRCUIT		180		2#12,1#12G,3/4C	20	1		1	20	2#12,1#12G,3/4C		180		RECEPTACLES	10
11	EXISTING CIRCUIT			180	2#12,1#12G,3/4C	20	1		1	20				180	EXISTING CIRCUIT	12
13	EXISTING CIRCUIT	180			2#12,1#12G,3/4C	20	1		1	20		180			EXISTING CIRCUIT	14
15	EXISTING CIRCUIT		180		2#12,1#12G,3/4C	20	1		1	20			180		EXISTING CIRCUIT	16
17	EXISTING CIRCUIT			180	2#12,1#12G,3/4C	20	1		1	20				180	EXISTING CIRCUIT	18
19	EXISTING CIRCUIT	180			2#12,1#12G,3/4C	20	1		1	20		180			EXISTING CIRCUIT	20
21	EXISTING CIRCUIT		180		2#12,1#12G,3/4C	20	1		1	20			180		EXISTING CIRCUIT	22
23	EXISTING CIRCUIT			180	2#12,1#12G,3/4C	20	1		1	20				180	EXISTING CIRCUIT	24
		720	720	720								720	720	720		
		0	0	0							TOTAL DEMAND LOAD	1440	1440	1440	4320	

EXISTING PANEL LP3		EXISTING FILTER BLDG 2ND FL CONSOLE THIS PANEL ONLY FEEDS EQUIPMENT WITHIN THE CONSOLE													MAIN LUGS	
225A,208Y/120V,3PH,4W		VA LOAD			WIRE/CONDUIT	C.B.			C.B.		WIRE/CONDUIT	VA LOAD				
NO.	USE	A	B	C	QTY SIZE	TRIP	P		P	TRIP	QTY SIZE	A	B	C	USE	NO.
1	EXISTING CIRCUIT	180			2#12,1#12G,3/4C	20	1		1	20	2#12,1#12G,3/4C	180			INTERIOR LIGHTING	2
3	EXISTING CIRCUIT		180		2#12,1#12G,3/4C	20	1		1	20	2#12,1#12G,3/4C		180		RECEPTACLES	4
5	EXISTING CIRCUIT			180	2#12,1#12G,3/4C	20	1		1	20	2#12,1#12G,3/4C			180	EXISTING CIRCUIT	6
7	EXISTING CIRCUIT	180			2#12,1#12G,3/4C	20	1		1	20	2#12,1#12G,3/4C	180			EXISTING CIRCUIT	8
9	EXISTING CIRCUIT		180		2#12,1#12G,3/4C	20	1		1	20	2#12,1#12G,3/4C		180		EXISTING CIRCUIT	10
11	EXISTING CIRCUIT			180	2#12,1#12G,3/4C	20	1		1	20				180	SPARE	12
		360	360	360								360	360	360		
		0	0	0							TOTAL DEMAND LOAD	720	720	720	2160	

EXISTING PANEL LP4		EXISTING FILTER BLDG PIPE GALLERY													MAIN LUGS	
225A,208Y/120V,3PH,4W		VA LOAD			WIRE/CONDUIT	C.B.			C.B.		WIRE/CONDUIT	VA LOAD				
NO.	USE	A	B	C	QTY SIZE	TRIP	P		P	TRIP	QTY SIZE	A	B	C	USE	NO.
1	INTERIOR LIGHTING	700			2#12,1#12G,3/4C	20	1		1	20	2#12,1#12G,3/4C	180			INTERIOR LIGHTING	2
3	RECEPTACLES		720		2#12,1#12G,3/4C	20	1		1	20	2#12,1#12G,3/4C		180		TURBIDITY METER	4
5	EXISTING CIRCUIT			200		20	1		1	20	2#12,1#12G,3/4C			180	CL2 DETECTOR	6
7	EXISTING CIRCUIT	180				20	1					5000				8
9	EXISTING CIRCUIT		180			20	1		3	70	3#4,1#8G,1C		5000		LAB PANEL	10
11	EXISTING CIRCUIT			180		20	1							5000		12
13	EXISTING CIRCUIT	180				20	1		1	20		180			EXISTING CIRCUIT	14
15	CONTROL CIRCUIT		180		2#12,1#12G,3/4C	20	1		1	20			180		EXISTING CIRCUIT	16
17	CONTROL AQUATROL			180	2#12,1#12G,3/4C	20	1		1	20				180	EXISTING CIRCUIT	18
19	RECP PHONE BELL	180			2#12,1#12G,3/4C	20	1		1	20		180			EXISTING CIRCUIT	20
21	EXISTING CIRCUIT		180			20	1		1	20			180		EXISTING CIRCUIT	22
23	EXISTING CIRCUIT			180		20	1		1	20				180	EXISTING CIRCUIT	24
25	EXISTING CIRCUIT	180				20	1		1	20	2#12,1#12G,3/4C	180			POWER PROTECTION	26
27	EXISTING CIRCUIT		180			20	1		1	20	2#12,1#12G,3/4C		180		POWER PROTECTION	28
29	EXISTING CIRCUIT			180		20	1		1	20	2#12,1#12G,3/4C			180	RECP. COMPUTER	30
31	SOUTH GATE (1/2HP)	1200			2#12,1#12G,3/4C	20	1		2	60		180			SPARE	32
33	MAIN GATE (1/2 HP)		1200		2#12,1#12G,3/4C	20	1						180			34
35	SPARE			1440		20	2		2	20				180	SPARE	36
37		1440										180				38
39	STOVE		3600		2#6,1#10G,3/4C	50	2		2	40	2#8,1#10G,1C		2880		AC COMPRESSOR	40
41				3600										2880		42
		2620	1440	920								5900	5720	5720		
		0	0	0							TOTAL DEMAND LOAD	8520	7160	6640	22320	

NOTE:
THE PANELS ON THIS DRAWING ARE EXISTING AND HAVE NOT BEEN INVESTIGATED AS TO THE NUMBER OF ACTIVE CIRCUITS NOR THE ACTUAL LOADS ON EACH CIRCUIT. MOST OF THE CIRCUITS WILL REMAIN IN USE UNLESS EQUIPMENT IS SCHEDULED TO BE FED FROM ONE OF THE NEWER PANELS.

NO.	DATE	ISSUED FOR	BY
1	07/24/15	REQUEST FOR PROPOSAL	G.A.B.

DESIGNED J.M.B.
DRAWN J.M.B.
CHECKED J.C.B.
PROJ. ENGR. J.C.B.

JOHN C. BURKE P.E.
No. 56076

HAZEN AND SAWYER
Environmental Engineers & Scientists
4000 Hollywood Boulevard, Suite 750N
Hollywood, Florida 33021
Certificate of Authorization Number: 2771

SCALE NA

CLIENTS PROJECT: –
ENGINEERS PROJECT: 44238-004
CAD REFERENCE: 44238-004BP3-E44

NORTH MIAMI FLORIDA
CITY OF NORTH MIAMI
PUBLIC WORKS UTILITIES

WINSON WATER TREATMENT PLANT
RELIABILITY IMPROVEMENTS – VOLUME C: WTP REHAB
PANEL SCHEDULES
PROCESS AREA
SHEET 3

DATE: JULY 2015
SHEET: 283 OF 335
DRAWING: E-44

REQUEST FOR PROPOSAL

PLOT DATE: 7/24/2015 4:40 PM BY: TBLOCAS
XREFs= ..\Tblock\44238-004-BP3-TB
File = H:\44238-004\Drawings\design build package\volume c - wtp rehab\Bid Package 3 - WTP Rehab\Electrical\44238-004BP3-E44 Saved by HScall Save date = 6/6/2014 5:28 PM

EXISTING PANEL LP5		EXISTING FILTER BLDG 2ND FL LAB												MAIN LUGS	
225A,208Y/120V,3PH,4W		VA LOAD			WIRE/CONDUIT	C.B.			C.B.	WIRE/CONDUIT	VA LOAD				
NO.	USE	A	B	C	QTY SIZE	TRIP	P		P	TRIP	QTY SIZE	A	B	C	USE	NO.
1	AE/AIT 41510	360			2#12,1#12G,3/4C	20	1		1	20	2#12,1#12G,3/4C	180			OFFICE OUTLET NORTH	2
3	INTERIOR LIGHTING		720		2#12,1#12G,3/4C	20	1		1	20	2#12,1#12G,3/4C		360		OUTDOOR LIGHTS SOUTH	4
5	EXTERIOR LIGHTING			200	2#12,1#12G,3/4C	20	1		1	20	2#12,1#12G,3/4C			180	OFFICE OUTLET EAST	6
7	AE/AIT 41511	360			2#12,1#12G,3/4C	20	1		1	20	2#12,1#12G,3/4C	180			BATHROOM	8
9	AE/AIT 41512		360		2#12,1#12G,3/4C	20	1		1	20	2#12,1#12G,3/4C		360		OUTDOOR LIGHTS EAST	10
11	AE/AIT 41520			360	2#12,1#12G,3/4C	20	1		1	20	2#12,1#12G,3/4C			180	ACCELATOR LIGHTS	12
13	WATER HEATER	1200			2#12,1#12G,3/4C	20	1		1	20	2#12,1#12G,3/4C	180			OPER CONSOLE WEST	14
15	OPER CONSOLE EAST		720		2#12,1#12G,3/4C	20	1		1	20	2#12,1#12G,3/4C		180		RADIO	16
17	QUAD OUTLETS			720	2#12,1#12G,3/4C	20	1		1	20	2#12,1#12G,3/4C			180	LAB RECEPTACLE	18
19	AE/AIT 41530	360			2#12,1#12G,3/4C	20	1		1	20	2#12,1#12G,3/4C	360			AE/AIT 22020	20
21	AE/AIT 41540		360		2#12,1#12G,3/4C	20	1		1	20	2#12,1#12G,3/4C		360		AE/AIT 22021	22
23	AE/AIT 41550			360	2#12,1#12G,3/4C	20	1		1	20				180	SPARE	24
		2280	2160	1640								900	1260	720		
		0	0	0							TOTAL DEMAND LOAD	3180	3420	2360	8960	

ALL CIRCUITS MARKED NEW IN EXISTING PANELS SHALL INCLUDE NEW CIRCUIT BREAKERS.

EXISTING PANEL LP6		EXISTING ELEC ROOM NO.2												MAIN LUGS	
225A,208Y/120V,3PH,4W		VA LOAD			WIRE/CONDUIT	C.B.			C.B.	WIRE/CONDUIT	VA LOAD				
NO.	USE	A	B	C	QTY SIZE	TRIP	P		P	TRIP	QTY SIZE	A	B	C	USE	NO.
1	SPARE MAIN	0			NA	100	3		1	20	2#12,1#12G	200			INTERIOR LIGHTS	2
3			0						1	20	2#12,1#12G		180		RECEPTACLES	4
5				0					1	20	2#12,1#12G			360	OUTSIDE LIGHTS	6
7	GENERATOR ENCLOSURE PANEL	1800			4#6,1#10G	60	3		1	20	2#12,1#12G	1800			AIR CONDITIONER	8
9			1800												SPACE	10
11				1800											SPACE	12
13	SPACE														SPACE	14
15	SPACE														SPACE	16
17	SPACE														SPACE	18
19	SPACE														SPACE	20
21	SPACE														SPACE	22
23	SPACE														SPACE	24
25	SPACE														SPACE	26
27	SPACE														SPACE	28
29	SPACE														SPACE	30
		1800	1800	1800								2000	180	360		
		0	0	0							TOTAL DEMAND LOAD	3800	1980	2160	7940	

PANEL LP8		CHEMICAL HANDLING FACILITY												MAIN LUGS	
225A,208Y/120V,3PH,4W		VA LOAD			WIRE/CONDUIT	C.B.			C.B.	WIRE/CONDUIT	VA LOAD				
NO.	USE	A	B	C	QTY SIZE	TRIP	P		P	TRIP	QTY SIZE	A	B	C	USE	NO.
1	PLC-50000	700			2#12,1#12G,3/4C	20	1		1	20	2#12,1#12G,3/4C	900			INTERIOR LIGHTING	2
3	LCP-55100 ANTI-COAG		720		2#12,1#12G,3/4C	20	1		1	20	2#12,1#12G,3/4C		180		RECEPTACLES	4
5	LCP-53000 COAG			200	2#12,1#12G,3/4C	20	1		1	20	2#12,1#12G,3/4C			180	SUMP PUMP RECP	6
7	LCP-52100 FLUORIDE	720			2#12,1#12G,3/4C	20	1		1	20	2#12,1#12G,3/4C	180			SUMP PUMP RECP	8
9	LCP-52020 FLUOR TP		200		2#12,1#12G,3/4C	20	1		1	20	2#12,1#12G,3/4C		180		SUMP PUMP RECP	10
11	LCP-54100 AMMONIA			360	2#12,1#12G,3/4C	20	1		1	20	2#12,1#12G,3/4C			180	FIT 30000	12
13	LCP-53100 COAG AID SKID PANEL	360			2#12,1#12G,3/4C	20	1		1	20	2#12,1#12G,3/4C	180			FIT 30005	14
15	LCP-52000 FLUORIDE UNLOADING PANEL		200		2#12,1#12G,3/4C	20	1		1	20	2#12,1#12G,3/4C		180		LIT 23000	16
17	LCP-54000 AMMONIA UNLOADING PANEL			180	2#12,1#12G,3/4C	20	1		1	20	2#12,1#12G,3/4C			180	LIT 41000	18
19	LCP-56000 CHEM LEAK DETECTION PANEL	180			2#12,1#12G,3/4C	20	1		1	20	2#12,1#12G,3/4C	180			FIT 43000	20
21	EF-50010 1/4HP		720		2#12,1#12G,3/4C	20	1		1	20	2#12,1#12G,3/4C		360		FS 53200,52135, 52136,54011,54012	22
23	EF-50020 1/4HP			720	2#12,1#12G,3/4C	20	1		1	20				180	SPARE	24
25	EF-50030 1/4HP	720			2#12,1#12G,3/4C	20	1		1	20		180			SPARE	26
27	MOV 52001		720		2#12,1#12G,3/4C	20	1		1	20			180		SPARE	28
29	SPARE			180		20	1		1	20				180	SPARE	30
31	SPARE	180				20	1		1	20		180			SPARE	32
33	SPARE		180			20	1		1	20			180		SPARE	34
35	SPARE			180		20	1		1	20				180	SPARE	36
37	SPARE	180				20	1		1	20		180			SPARE	38
39	SPARE		180			20	1		1	20			180		SPARE	40
41	SPARE			180		20	1		1	20				180	SPARE	42
		2860	2560	1640								1800	1080	900		
		0	0	0							TOTAL DEMAND LOAD	4660	3640	2540	10840	

PANEL LP9		SODIUM HYPOCHLORITE FACILITY												MAIN LUGS	
225A,208Y/120V,3PH,4W		VA LOAD			WIRE/CONDUIT	C.B.			C.B.	WIRE/CONDUIT	VA LOAD				
NO.	USE	A	B	C	QTY SIZE	TRIP	P		P	TRIP	QTY SIZE	A	B	C	USE	NO.
1	SPARE	180				20	1		1	20	2#12,1#12G,3/4C	420			INTERIOR LIGHTING	2
3	SPARE		180			20	1		1	20			180		SPARE	4
5	SPARE			180		20	1		1	20	2#12,1#12G,3/4C			1800	SUMP PUMP	6
7	LCP 51010 TRANSFER PUMPS	2500			3#10,1#12G,3/4C	20	3		1	20	2#12,1#12G,3/4C	180			RECEPTACLES	8
9			2500						1	20	2#12,1#12G,3/4C		360		RECEPTACLES	10
11				2500					1	20	2#12,1#12G,3/4C			180	PLC 51000	12
13	LCP 51100 SKID 1	1800			3#12,1#12G,3/4C	20	2		1	20	2#12,1#12G,3/4C	180			FIT 10000	14
15			1800						1	20	2#12,1#12G,3/4C		180		LIT 62001	16
17	LCP 51200 SKID 2			1800	3#12,1#12G,3/4C	20	2		1	20	2#12,1#12G,3/4C			180	LIT 62002	18
19		1800							1	20	2#12,1#12G,3/4C	180			FIT 11001	20
21	PLC 51000		360		2#12,1#12G,3/4C	20	1		1	20	2#12,1#12G,3/4C		180		LIT 11001	22
23	LCP 56001 LEAK DETECTION			180	2#12,1#12G,3/4C	20	1		1	20	2#12,1#12G,3/4C			180	FSH 51015, 51016	24
25	LCP 51000 UNLOADING CONTROL	360			2#12,1#12G,3/4C	20	1		1	20	2#12,1#12G,3/4C	1800			MOG 77100	26
27	MOV 61000		720		2#12,1#12G,3/4C	20	1		1	20	2#12,1#12G,3/4C		1800		MOG 77500	28
29	MOV 62000			720	2#12,1#12G,3/4C	20	1		1	20				180	SPARE	30
31	FE/FIT 62000	360			2#12,1#12G,3/4C	20	1		1	20		180			SPARE	32
33	SPARE		180			20	1		1	20			180		SPARE	34
35	SPARE			180		20	1		1	20				180	SPARE	36
37	SPARE	180				20	1		1	20		180			SPARE	38
39	SPARE		180			20	1		1	20			180		SPARE	40
41	SPARE			180		20	1		1	20				180	SPARE	42
		7000	5560	5380								2940	2700	2520		
		0	0	0							TOTAL DEMAND LOAD	9940	8260	7900	26100	

NO.	DATE	ISSUED FOR	BY
1	07/24/15	REQUEST FOR PROPOSAL	G.A.B.

DESIGNED J.M.B.
DRAWN J.M.B.
CHECKED J.C.B.
PROJ. ENGR. J.C.B.

JOHN C. BURKE P.E.
No. 17301

HAZEN AND SAWYER
Environmental Engineers & Scientists
4000 Hollywood Boulevard, Suite 750N
Hollywood, Florida 33021
Certificate of Authorization Number: 2771

SCALE NA

CLIENTS PROJECT: –
ENGINEERS PROJECT: 44238-004
CAD REFERENCE: 44238-004BP3-E45

NORTH MIAMI FLORIDA
CITY OF NORTH MIAMI
PUBLIC WORKS UTILITIES

WINSON WATER TREATMENT PLANT
RELIABILITY IMPROVEMENTS – VOLUME C: WTP REHAB
PANEL SCHEDULES
PROCESS AREA
SHEET 4

DATE: JULY 2015
SHEET: 284 OF 335
DRAWING: E-45

REQUEST FOR PROPOSAL

PLOT DATE: 7/24/2015 4:40 PM BY: TBOCAS
XREFs= ..\Tblock\44238-004-BP3-TB
File = H:\44238-004\Drawings\design build package\volume c - wtp rehab\Bid Package 3 - WTP Rehab\Electrical\44238-004BP3-E45 Saved by tbocas Save date = 5/27/2015 10:39 AM

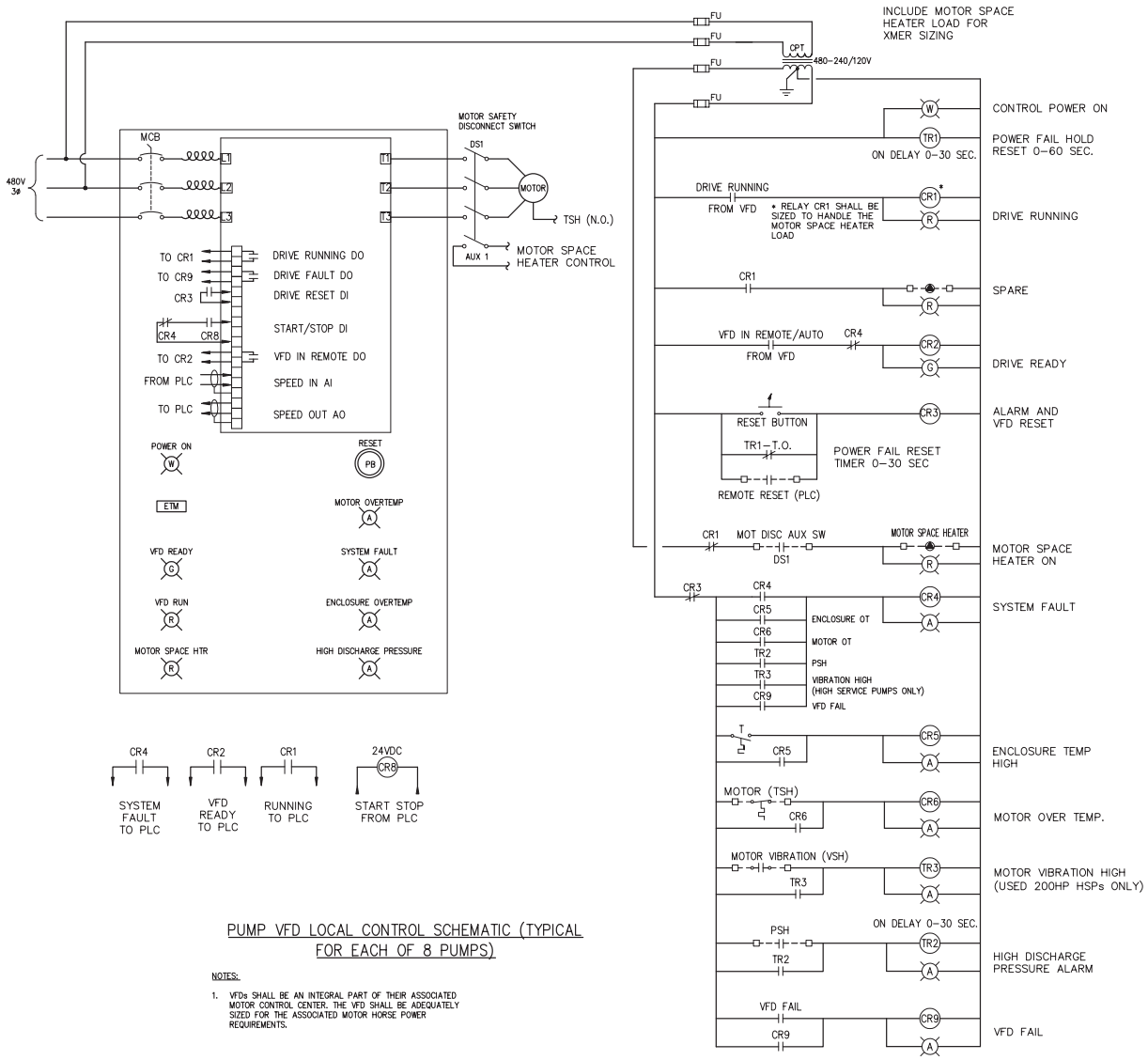

PUMP VFD LOCAL CONTROL SCHEMATIC (TYPICAL FOR EACH OF 8 PUMPS)

NOTES:

1. VFDs SHALL BE AN INTEGRAL PART OF THEIR ASSOCIATED MOTOR CONTROL CENTER. THE VFD SHALL BE ADEQUATELY SIZED FOR THE ASSOCIATED MOTOR HORSE POWER REQUIREMENTS.

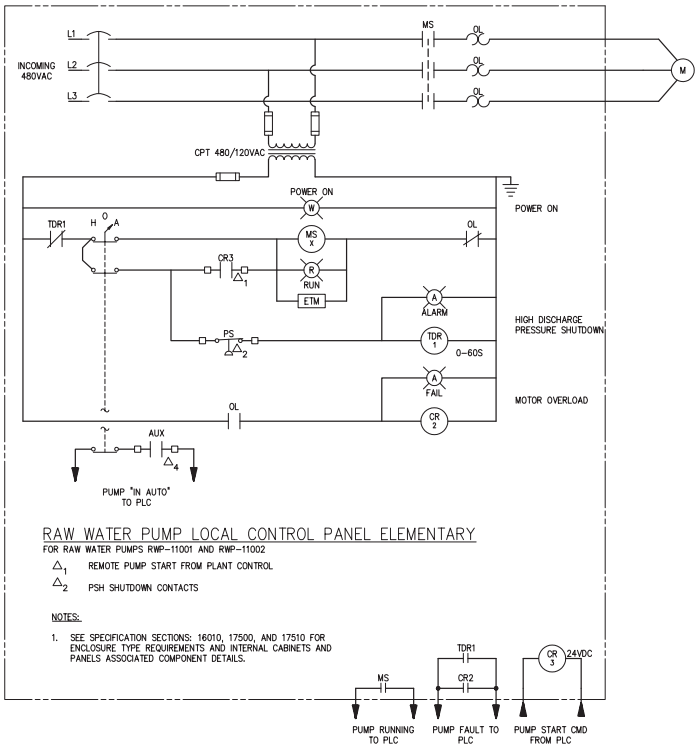

RAW WATER PUMP LOCAL CONTROL PANEL ELEMENTARY

FOR RAW WATER PUMPS RWP-11001 AND RWP-11002

Δ_1 REMOTE PUMP START FROM PLANT CONTROL

Δ_2 PSH SHUTDOWN CONTACTS

NOTES:

1. SEE SPECIFICATION SECTIONS: 16010, 17500, AND 17510 FOR ENCLOSURE TYPE REQUIREMENTS AND INTERNAL CABINETS AND PANELS ASSOCIATED COMPONENT DETAILS.

NO.	DATE	ISSUED FOR	BY
1	07/24/15	REQUEST FOR PROPOSAL	G.A.B.

DESIGNED J.M.B.
DRAWN G.P.B.
CHECKED J.C.B.
PROJ. ENGR. J.C.B.

JOHN C. BURKE P.E.
No. 17301

HAZEN AND SAWYER
Environmental Engineers & Scientists
4000 Hollywood Boulevard, Suite 750N
Hollywood, Florida 33021
Certificate of Authorization Number: 2771

SCALE –

CLIENTS PROJECT: –
ENGINEERS PROJECT: 44238-004
CAD REFERENCE: 44238-004BP3-E46

NORTH MIAMI FLORIDA
CITY OF NORTH MIAMI
PUBLIC WORKS UTILITIES

WINSON WATER TREATMENT PLANT
RELIABILITY IMPROVEMENTS – VOLUME C: WTP REHAB

SCHEMATICS
SHEET 1

DATE: JULY 2015
SHEET: 285 OF 335
DRAWING: E-46

REQUEST FOR PROPOSAL

PLOT DATE: 7/24/2015 4:40 PM BY: TBOCAS

XREFs= ..\Tblock\44238-004-BP3-TB

File = H:\44238-004\Drawings\design build package\volume c - wtp rehab\Bid Package 3 - WTP Rehab\Electrical\44238-004BP3-E46 Saved by jbroad Save date = 12/23/2013 5:07 PM

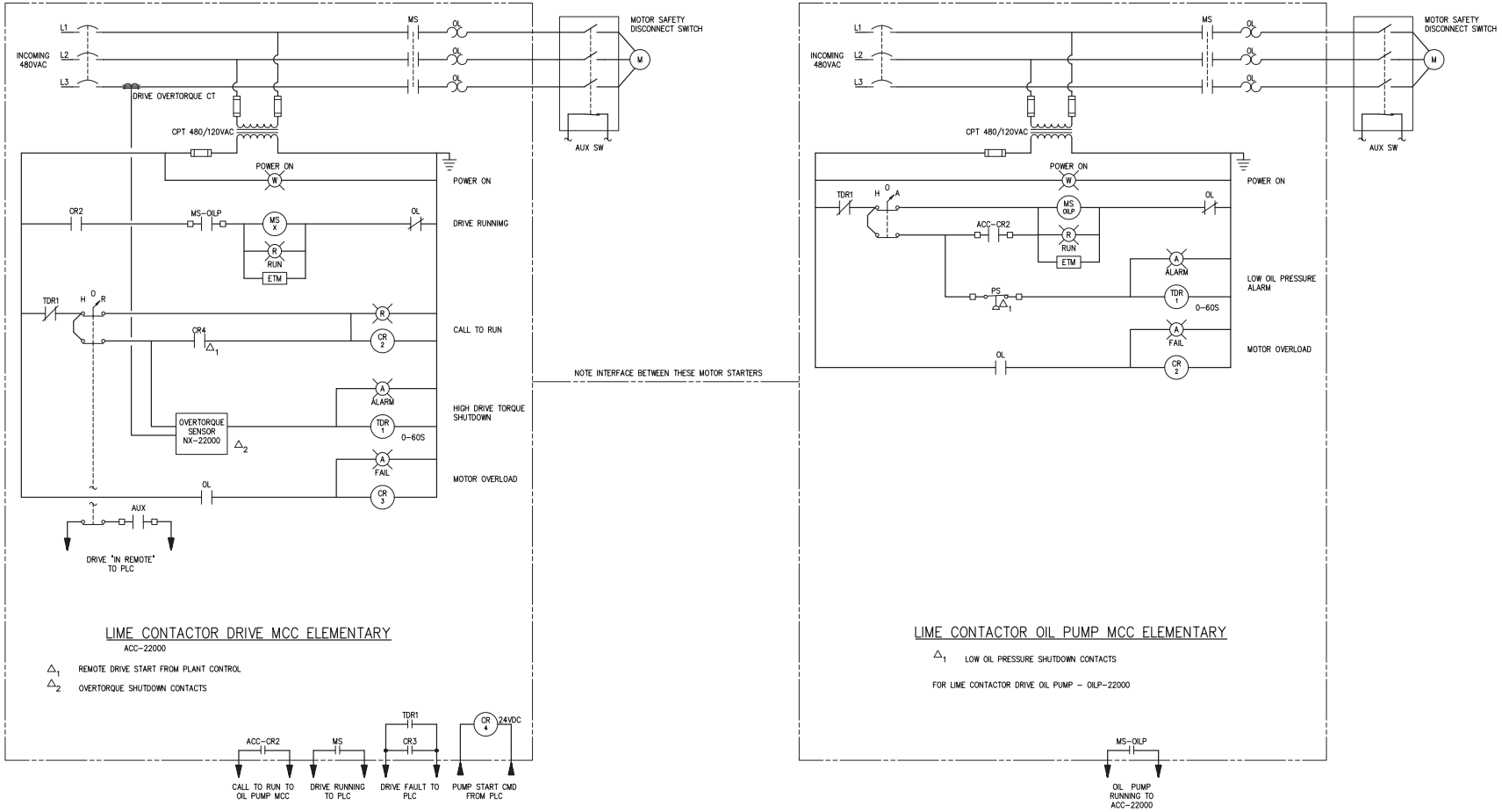

NO.	DATE	ISSUED FOR	BY
1	07/24/15	REQUEST FOR PROPOSAL	G.A.B.

DESIGNED J.M.B.
DRAWN J.M.B.
CHECKED J.C.B.
PROJ. ENGR. J.C.B.

JOHN C. BURKE P.E.
No. 17301

HAZEN AND SAWYER
Environmental Engineers & Scientists
4000 Hollywood Boulevard, Suite 750N
Hollywood, Florida 33021
Certificate of Authorization Number: 2771

SCALE –

CLIENTS PROJECT: –
ENGINEERS PROJECT: 44238-004
CAD REFERENCE: 44238-004BP3-E47

NORTH MIAMI FLORIDA
CITY OF NORTH MIAMI
PUBLIC WORKS UTILITIES

WINSON WATER TREATMENT PLANT
RELIABILITY IMPROVEMENTS – VOLUME C: WTP REHAB

SCHEMATICS
SHEET 2

DATE: JULY 2015
SHEET: 286 OF 335
DRAWING: E-47

REQUEST FOR PROPOSAL

PLOT DATE: 7/24/2015 4:40 PM BY: TBLOAS
XREFs= ..\Tblock\44238-004-BP3-TB
File = H:\44238-004\Drawings\design build package\volume c - wtp rehab\Bid Package 3 - WTP Rehab\Electrical\44238-004BP3-E47 Saved by jbroad Save date = 12/23/2013 5:07 PM

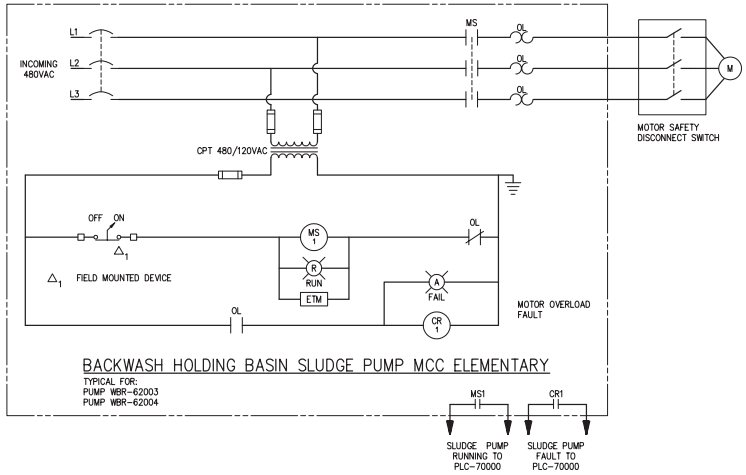

BACKWASH HOLDING BASIN SLUDGE PUMP MCC ELEMENTARY

TYPICAL FOR:
PUMP WBR-62003
PUMP WBR-62004

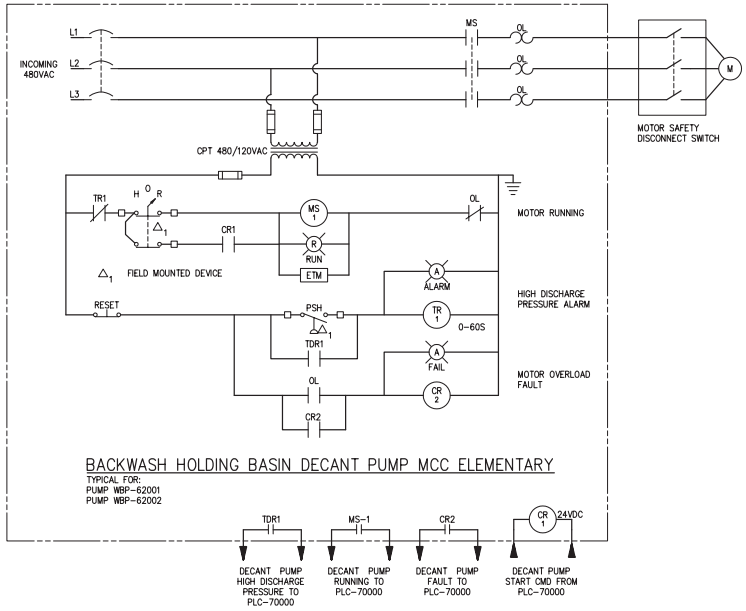

BACKWASH HOLDING BASIN DECANT PUMP MCC ELEMENTARY

TYPICAL FOR:
PUMP WBP-62001
PUMP WBP-62002

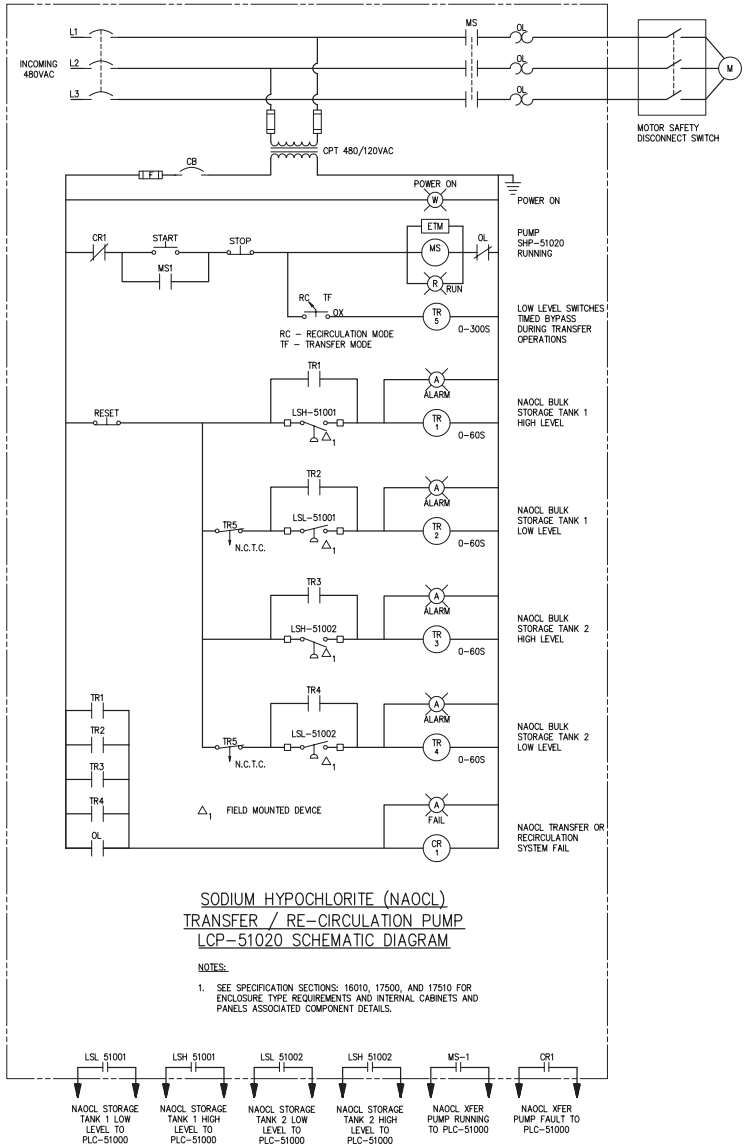

SODIUM HYPOCHLORITE (NAOCL)
TRANSFER / RE-CIRCULATION PUMP
LCP-51020 SCHEMATIC DIAGRAM

NOTES:

1. SEE SPECIFICATION SECTIONS: 16010, 17500, AND 17510 FOR ENCLOSURE TYPE REQUIREMENTS AND INTERNAL CABINETS AND PANELS ASSOCIATED COMPONENT DETAILS.

NO.	DATE	ISSUED FOR	BY
1	07/24/15	REQUEST FOR PROPOSAL	G.A.B.

DESIGNED J.M.B.
DRAWN J.M.B.
CHECKED J.C.B.
PROJ. ENGR. J.C.B.

JOHN C. BURKE P.E.
No. 17301

HAZEN AND SAWYER
Environmental Engineers & Scientists
4000 Hollywood Boulevard, Suite 750N
Hollywood, Florida 33021
Certificate of Authorization Number: 2771

SCALE –

CLIENTS PROJECT: –
ENGINEERS PROJECT: 44238-004
CAD REFERENCE: 44238-004BP3-E48

NORTH MIAMI FLORIDA
CITY OF NORTH MIAMI
PUBLIC WORKS UTILITIES

WINSON WATER TREATMENT PLANT
RELIABILITY IMPROVEMENTS – VOLUME C: WTP REHAB

SCHEMATICS
SHEET 3

DATE: JULY 2015
SHEET: 287 OF 335
DRAWING: E-48

REQUEST FOR PROPOSAL

PLOT DATE: 7/24/2015 4:40 PM BY: TBLOAS
XREFs= ..\Tblock\44238-004-BP3-TB
File = H:\44238-004\Drawings\design build package\volume c - wtp rehab\Bid Package 3 - WTP Rehab\Electrical\44238-004BP3-E48 Saved by jbroad Save date = 12/23/2013 5:07 PM

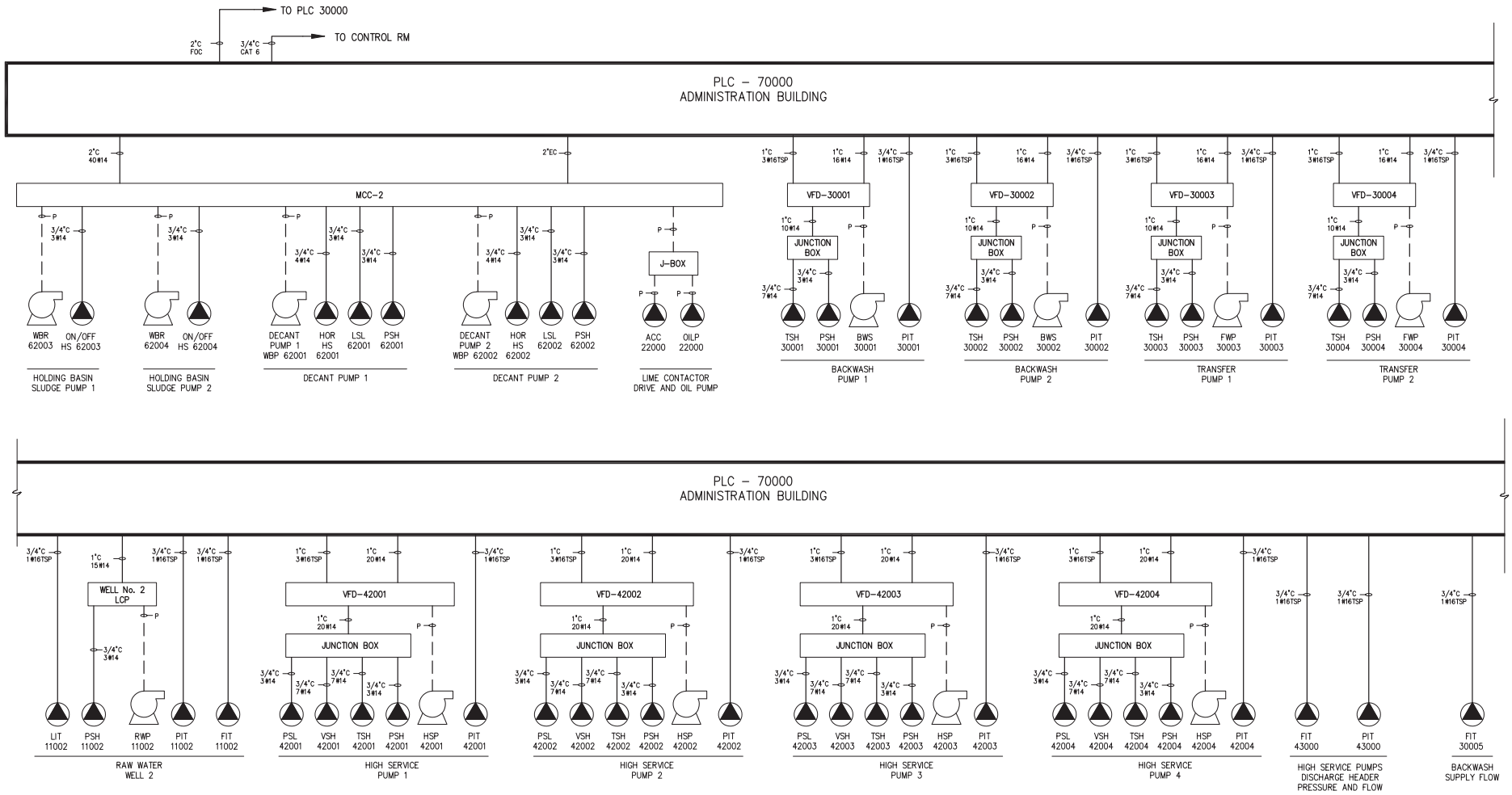

LEGEND:

CAT 6	CATEGORY 6 CABLE
FOC	FIBER OPTIC CABLE
P	AUX POWER AND OR CONTROL WIRING SEE ELECTRICAL SINGLE LINE OR PANEL SCHEDULES

NO.	DATE	ISSUED FOR	BY
1	07/24/15	REQUEST FOR PROPOSAL	G.A.B.

DESIGNED J.M.B.
DRAWN L.M.S.
CHECKED J.C.B.
PROJ. ENGR. J.C.B.

JOHN C. BURKE P.E.
No. 17301

HAZEN AND SAWYER
Environmental Engineers & Scientists
4000 Hollywood Boulevard, Suite 750N
Hollywood, Florida 33021
Certificate of Authorization Number: 2771

SCALE NTS

CLIENTS PROJECT: –
ENGINEERS PROJECT: 44238-004
CAD REFERENCE: 44238-004BP3-E49

CITY OF NORTH MIAMI
PUBLIC WORKS UTILITIES

WINSON WATER TREATMENT PLANT
RELIABILITY IMPROVEMENTS – VOLUME C: WTP REHAB

ELECTRICAL CONTROL AND SIGNAL RISER DIAGRAMS 1

DATE: JULY 2015
SHEET: 288 OF 335
DRAWING: E-49

REQUEST FOR PROPOSAL

PLOT DATE: 7/24/2015 4:40 PM BY: TBOCAS
XREFs= ..\Tblock\44238-004-BP3-TB
File = H:\44238-004\Drawings\design build package\volume c - wtp rehab\Bid Package 3 - WTP Rehab\Electrical\44238-004BP3-E49 Saved by jbroad Save date = 12/10/2013 2:57 PM

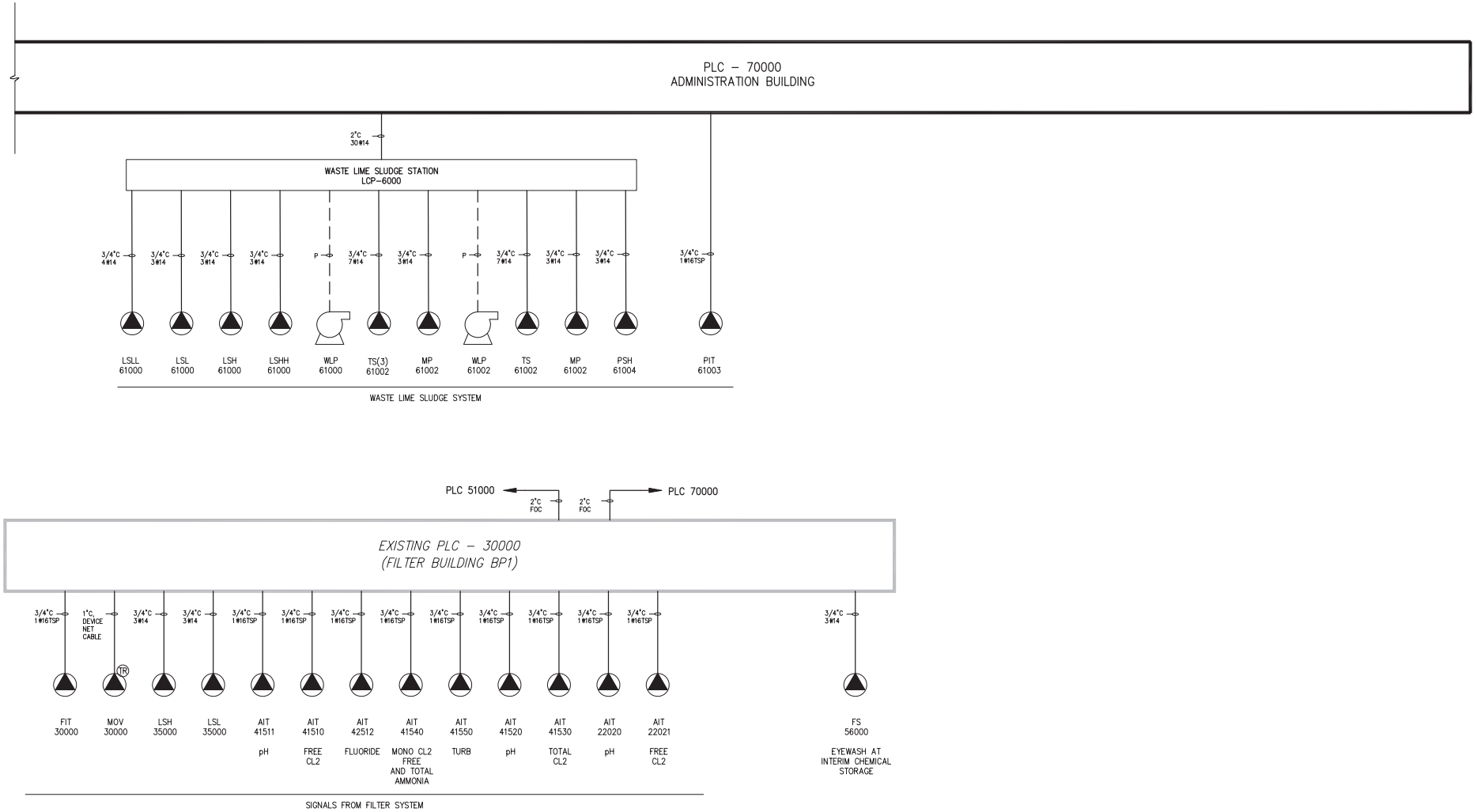

NOTE THAT ONLY NEW SIGNALS TO PLC–30000 ARE SHOWN HERE.
SEE BP–1 DOCUMENTATION FOR EXISTING SIGNALS

LEGEND:

CAT 6	CATEGORY 6 CABLE
FOC	FIBER OPTIC CABLE
P	POWER SEE ELECTRICAL SINGLE LINE OR PANEL SCHEDULES

REQUEST FOR PROPOSAL

NO.	DATE	ISSUED FOR	BY
1	07/24/15	REQUEST FOR PROPOSAL	G.A.B.

DESIGNED J.M.B.
DRAWN L.M.S.
CHECKED J.C.B.
PROJ. ENGR. J.C.B.

JOHN C. BURKE P.E.
No. 17301

HAZEN AND SAWYER
Environmental Engineers & Scientists
4000 Hollywood Boulevard, Suite 750N
Hollywood, Florida 33021
Certificate of Authorization Number: 2771

SCALE NTS

CLIENTS PROJECT: –
ENGINEERS PROJECT: 44238–004
CAD REFERENCE: 44238–004BP3–E50

NORTH MIAMI FLORIDA
CITY OF NORTH MIAMI
PUBLIC WORKS UTILITIES

WINSON WATER TREATMENT PLANT
RELIABILITY IMPROVEMENTS – VOLUME C: WTP REHAB

ELECTRICAL CONTROL AND SIGNAL RISER DIAGRAMS 2

DATE: JULY 2015
SHEET: 289 OF 335
DRAWING: E–50

PLOT DATE: 7/24/2015 4:40 PM BY: TBOCAS
XREFs= ..\Tblock\44238–004–BP3–TB
File = H:\44238–004\Drawings\design build package\volume c – wtp rehab\Bid Package 3 – WTP Rehab\Electrical\44238–004BP3–E50 Saved by jbroad Save date = 5/27/2015 10:39 AM

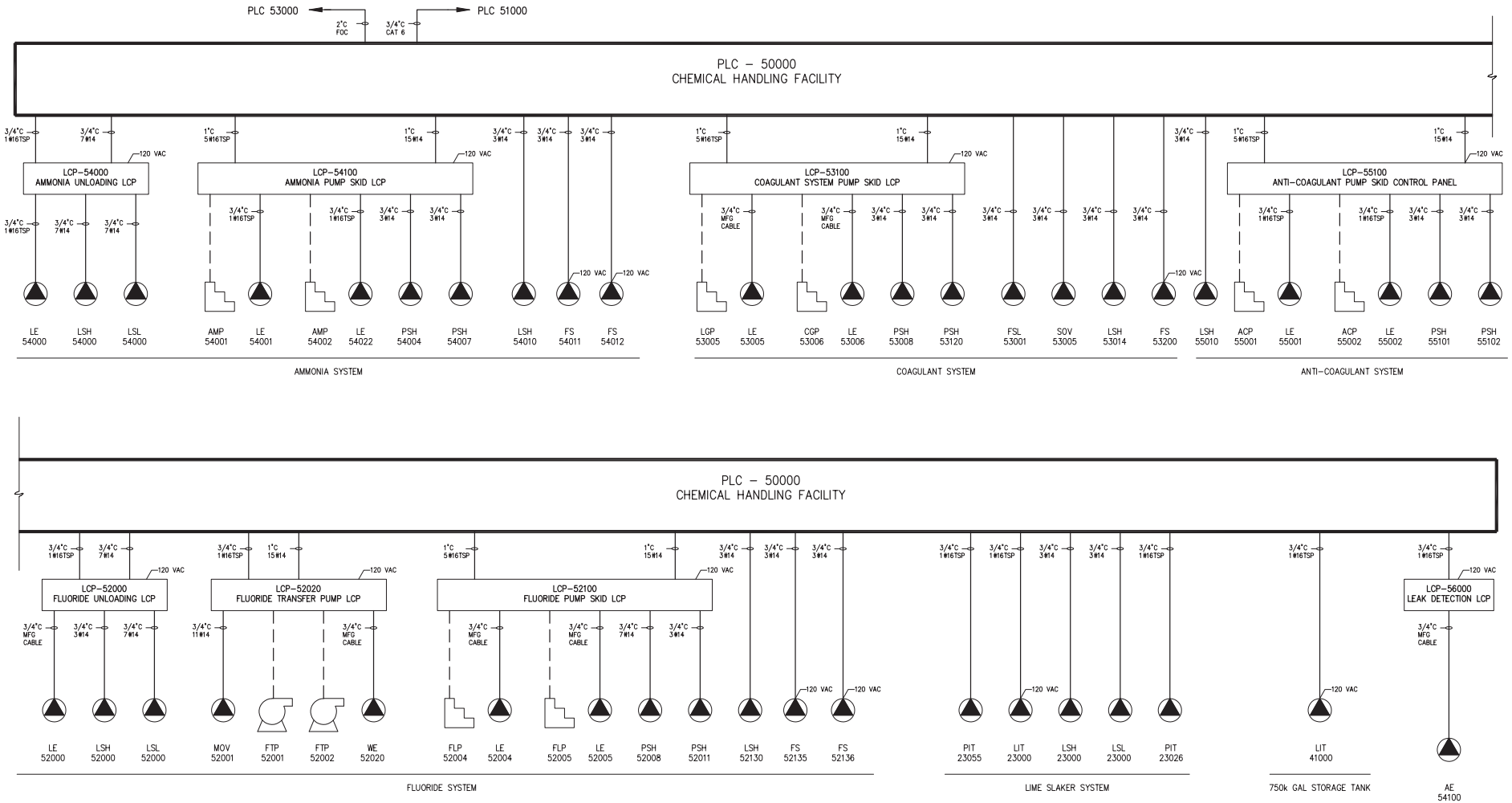

LEGEND:

CAT 6	CATEGORY 6 CABLE
FOC	FIBER OPTIC CABLE
P	POWER SEE ELECTRICAL SINGLE LINE OR PANEL SCHEDULES

NO.	DATE	ISSUED FOR	BY
1	07/24/15	REQUEST FOR PROPOSAL	G.A.B.

DESIGNED J.M.B.
DRAWN L.M.S.
CHECKED J.C.B.
PROJ. ENGR. J.C.B.

JOHN C. BURKE P.E.
No. 17301

HAZEN AND SAWYER
Environmental Engineers & Scientists
4000 Hollywood Boulevard, Suite 750N
Hollywood, Florida 33021
Certificate of Authorization Number: 2771

SCALE NTS

CLIENTS PROJECT: –
ENGINEERS PROJECT: 44238–004
CAD REFERENCE: 44238–004BP3–E51

NORTH MIAMI FLORIDA
CITY OF NORTH MIAMI
PUBLIC WORKS UTILITIES

WINSON WATER TREATMENT PLANT
RELIABILITY IMPROVEMENTS – VOLUME C: WTP REHAB

ELECTRICAL CONTROL AND SIGNAL
RISER DIAGRAMS 3

DATE: JULY 2015
SHEET: 290 OF 335
DRAWING: E–51

REQUEST FOR PROPOSAL

PLOT DATE: 7/24/2015 4:40 PM BY: TBOCAS
XREFs= ..\Tblock\44238–004–BP3–TB
File = H:\44238–004\Drawings\design build package\volume c – wtp rehab\Bid Package 3 – WTP Rehab\Electrical\44238–004BP3–E51 Saved by jbroad Save date = 12/10/2013 2:57 PM

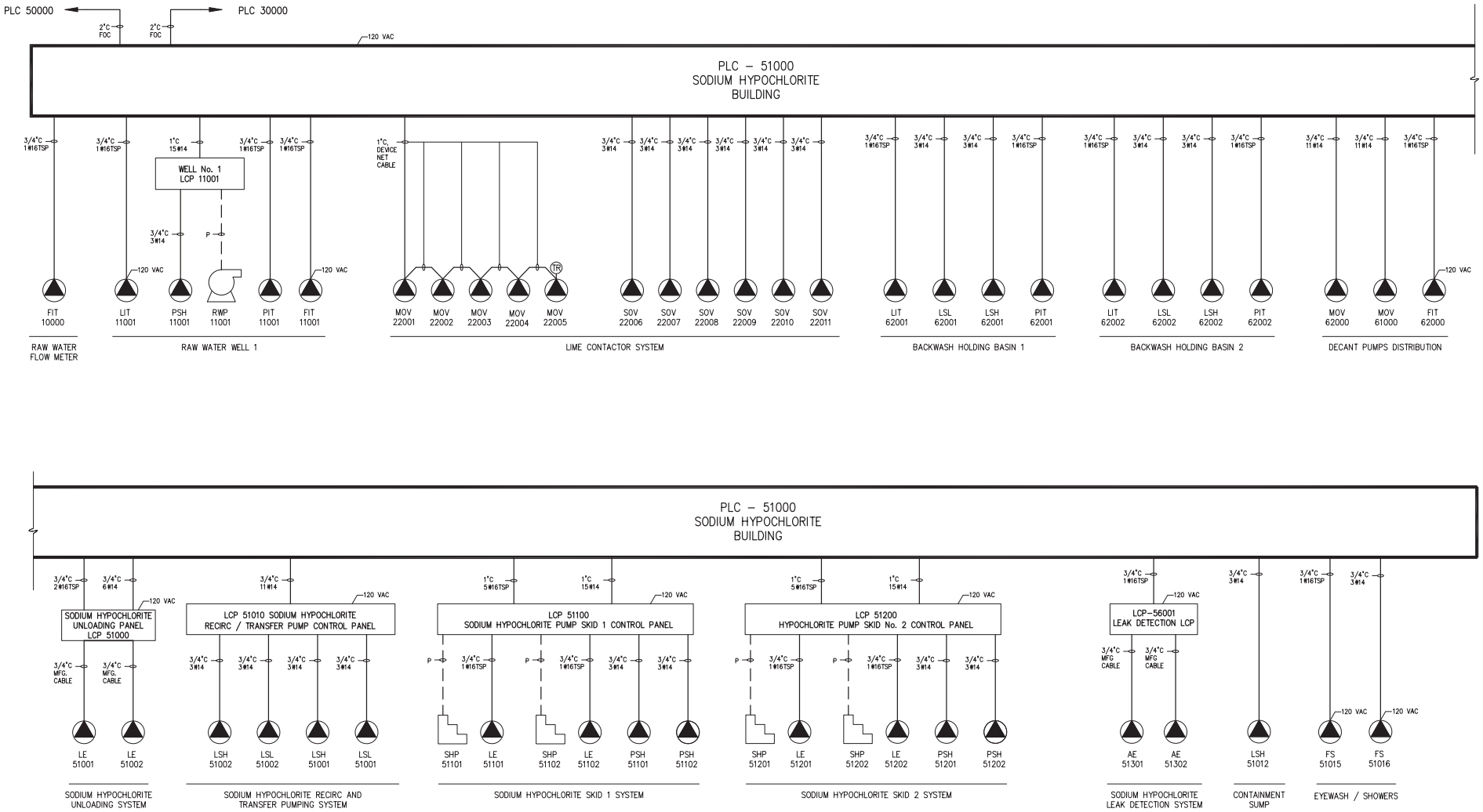

NO.	DATE	ISSUED FOR	BY
1	07/24/15	REQUEST FOR PROPOSAL	G.A.B.

DESIGNED J.M.B.
DRAWN L.M.S.
CHECKED J.C.B.
PROJ. ENGR. J.C.B.

JOHN C. BURKE P.E.
No. 17301

HAZEN AND SAWYER
Environmental Engineers & Scientists
4000 Hollywood Boulevard, Suite 750N
Hollywood, Florida 33021
Certificate of Authorization Number: 2771

SCALE NTS

CLIENTS PROJECT: –
ENGINEERS PROJECT: 44238–004
CAD REFERENCE: 44238–004BP3–E52

NORTH MIAMI FLORIDA
CITY OF NORTH MIAMI
PUBLIC WORKS UTILITIES

WINSON WATER TREATMENT PLANT
RELIABILITY IMPROVEMENTS – VOLUME C: WTP REHAB

ELECTRICAL CONTROL AND SIGNAL RISER DIAGRAMS 4

DATE: JULY 2015
SHEET: 291 OF 335
DRAWING: E–52

REQUEST FOR PROPOSAL

PLOT DATE: 7/24/2015 4:40 PM BY: TBOCAS
XREFs= ..\Tblock\44238–004–BP3–TB
File = H:\44238–004\Drawings\design build package\volume c – wtp rehab\Bid Package 3 – WTP Rehab\Electrical\44238–004BP3–E52 Saved by jbroad Save date = 5/27/2015 10:40 AM

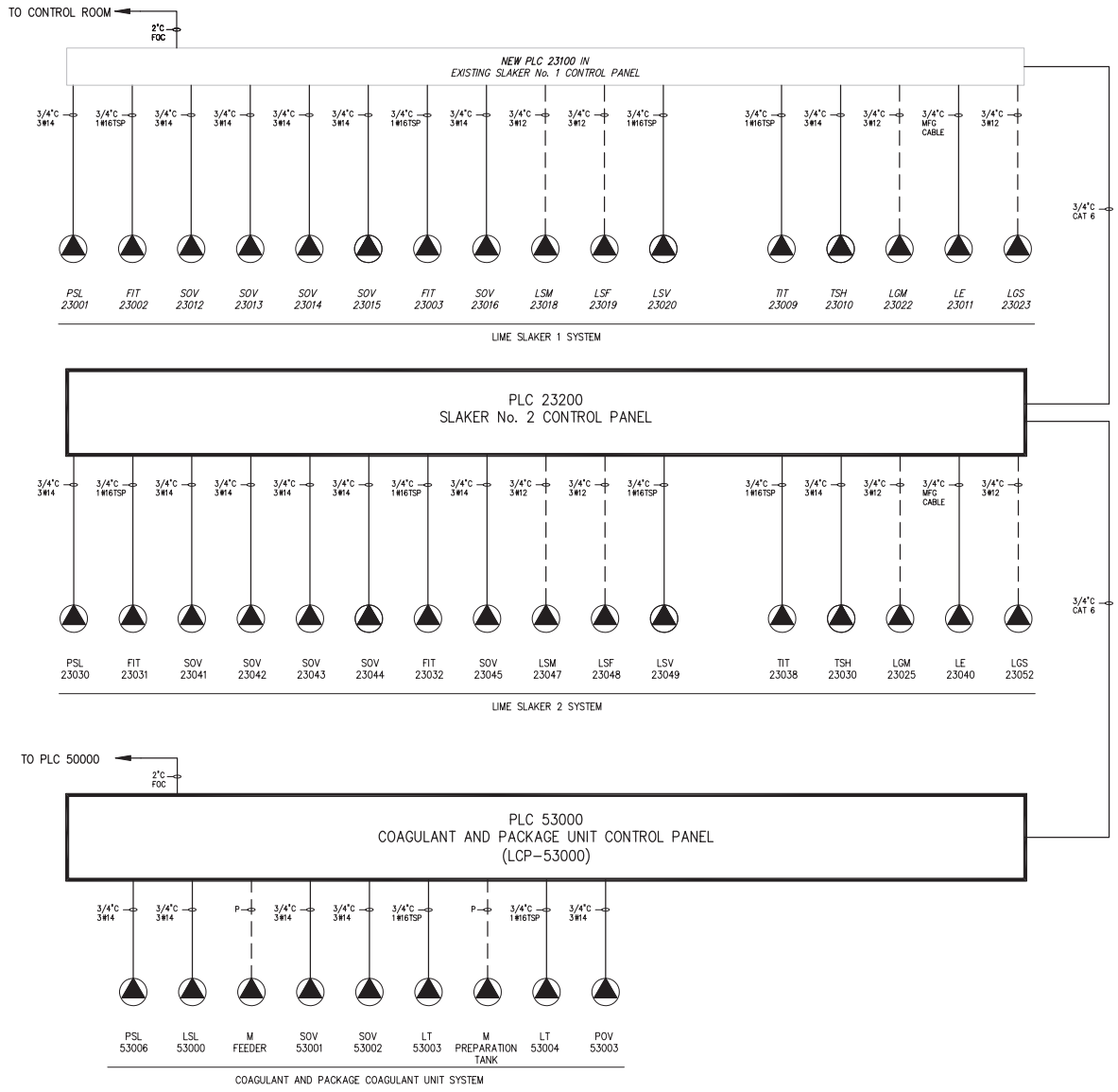

LEGEND:

CAT 6	CATEGORY 6 CABLE
FOC	FIBER OPTIC CABLE
P	POWER SEE ELECTRICAL SINGLE LINE OR PANEL SCHEDULES

NO.	DATE	ISSUED FOR	BY
1	07/24/15	REQUEST FOR PROPOSAL	G.A.B.

DESIGNED J.M.B.
DRAWN L.M.S.
CHECKED J.C.B.
PROJ. ENGR. J.C.B.

JOHN C. BURKE P.E.
No. 17301

HAZEN AND SAWYER
Environmental Engineers & Scientists
4000 Hollywood Boulevard, Suite 750N
Hollywood, Florida 33021
Certificate of Authorization Number: 2771

SCALE NTS

CLIENTS PROJECT: –
ENGINEERS PROJECT: 44238-004
CAD REFERENCE: 44238-004BP3-E53

NORTH MIAMI FLORIDA
CITY OF NORTH MIAMI
PUBLIC WORKS UTILITIES

WINSON WATER TREATMENT PLANT
RELIABILITY IMPROVEMENTS – VOLUME C: WTP REHAB

ELECTRICAL CONTROL AND SIGNAL
RISER DIAGRAMS 5

DATE: JULY 2015
SHEET: 292 OF 335
DRAWING: E-53

REQUEST FOR PROPOSAL

PLOT DATE: 7/24/2015 4:40 PM BY: TBOCAS
XREFs= ..\Tblock\44238-004-BP3-TB
File = H:\44238-004\Drawings\design build package\volume c - wtp rehab\Bid Package 3 - WTP Rehab\Electrical\44238-004BP3-E53 Saved by jbroad Save date = 12/10/2013 2:57 PM

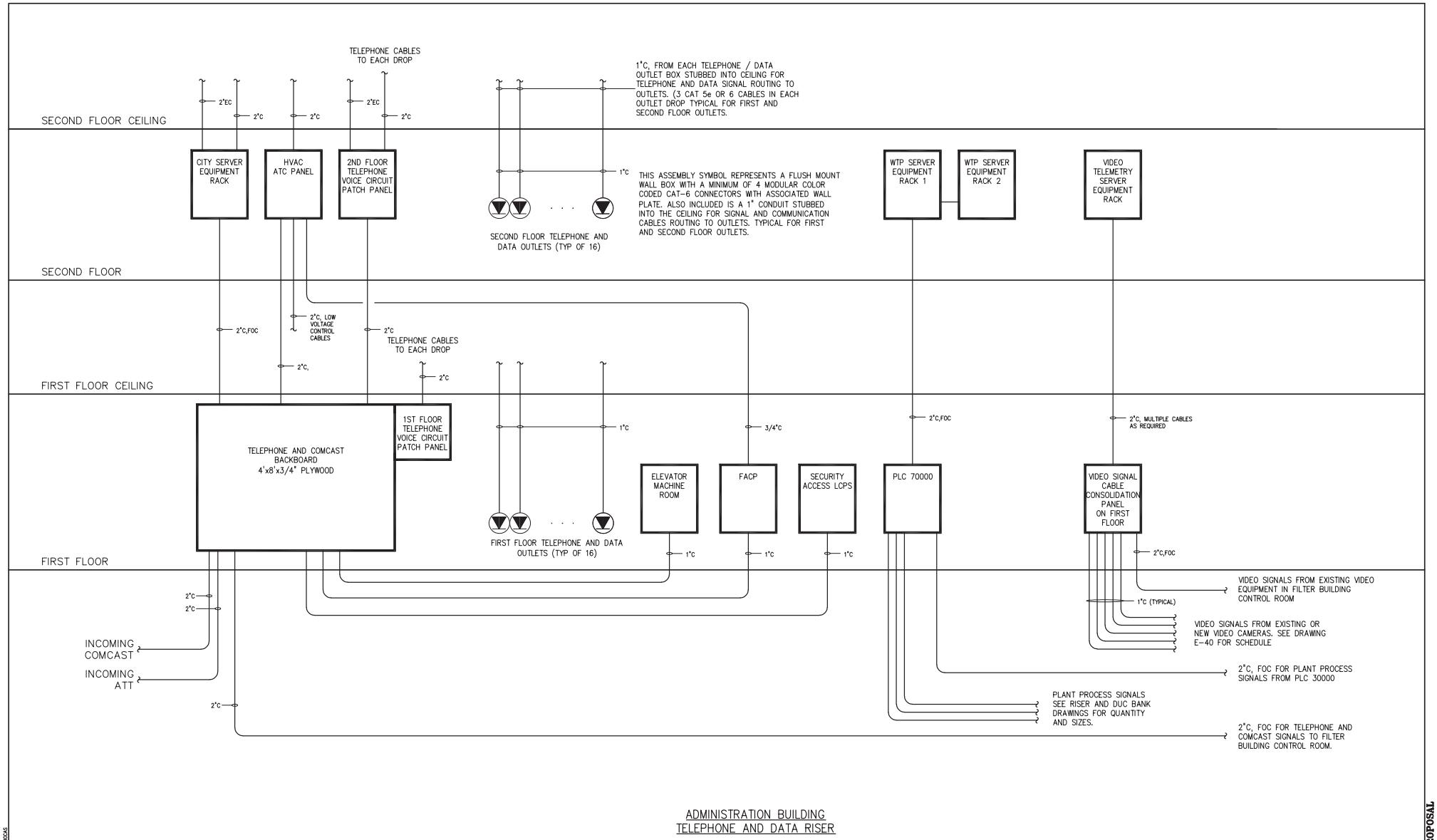

ADMINISTRATION BUILDING
TELEPHONE AND DATA RISER

NO.	DATE	ISSUED FOR	BY
1	07/24/15	REQUEST FOR PROPOSAL	G.A.B.

DESIGNED J.M.B.
DRAWN J.M.B.
CHECKED J.C.B.
PROJ. ENGR. J.M.B.

JOHN C. BURKE P.E.
No. 17301

HAZEN AND SAWYER
Environmental Engineers & Scientists
4000 Hollywood Boulevard, Suite 750N
Hollywood, Florida 33021
Certificate of Authorization Number: 2771

SCALE NTS

CLIENTS PROJECT: –
ENGINEERS PROJECT: 44238-004
CAD REFERENCE: 44238-004BP3-E54

NORTH MIAMI FLORIDA
CITY OF NORTH MIAMI
PUBLIC WORKS UTILITIES

WINSON WATER TREATMENT PLANT
RELIABILITY IMPROVEMENTS – VOLUME C: WTP REHAB

ELECTRICAL CONTROL AN SIGNAL RISER DIAGRAMS 6

DATE: JULY 2015
SHEET: 293 OF 335
DRAWING: E-54

REQUEST FOR PROPOSAL

PLOT DATE: 7/24/2015 4:40 PM BY: TBOCAS
XREFs= ..\Tblock\44238-004-BP3-TB
File = H:\44238-004\Drawings\design build package\volume c - wtp rehab\Bid Package 3 - WTP Rehab\Electrical\44238-004BP3-E54 Saved by jbroad Save date = 12/16/2013 11:02 AM

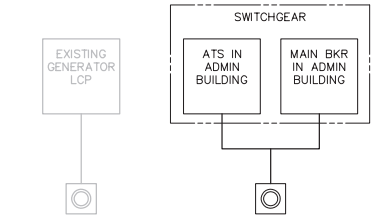

PLANT POWER
EMERGENCY SHUTDOWN CONTROL

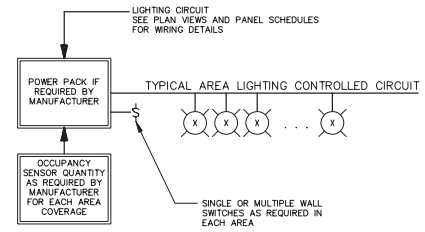

LIGHTING OCCUPANCY SENSOR
CONTROL

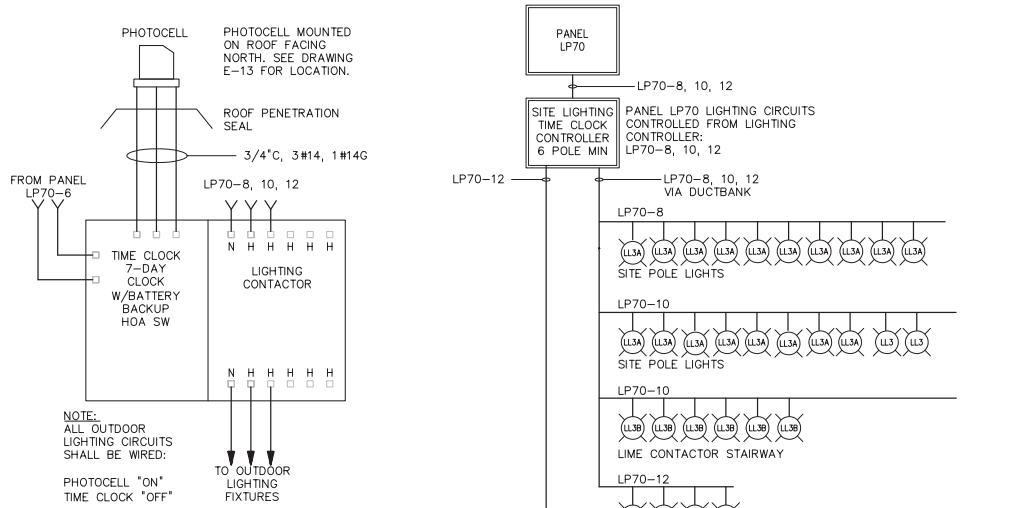

SITE LIGHTING SCHEDULE

CIRCUIT	FIXTURE QTY	WATTS	TOTAL CIR WATTS
LP70-8	10	70	700
LP70-10	16	70	1120
LP70-12	4	34	136
LP70-12	14	34	476
LP70-12	6	38	228
LP70-12	5	50	250
TOTAL			1090

SITE LIGHTING CONTROL

NO.	DATE	ISSUED FOR	BY
1	07/24/15	REQUEST FOR PROPOSAL	G.A.B.

DESIGNED J.M.B.
DRAWN J.M.B.
CHECKED J.C.B.
PROJ. ENGR. J.C.B.

JOHN C. BURKE P.E.
No. 17301

HAZEN AND SAWYER
Environmental Engineers & Scientists
4000 Hollywood Boulevard, Suite 750N
Hollywood, Florida 33021
Certificate of Authorization Number: 2771

SCALE –

CLIENTS PROJECT: –
ENGINEERS PROJECT: 44238-004
CAD REFERENCE: 44238-004BP3-E55

NORTH MIAMI FLORIDA
CITY OF NORTH MIAMI
PUBLIC WORKS UTILITIES

WINSON WATER TREATMENT PLANT
RELIABILITY IMPROVEMENTS – VOLUME C: WTP REHAB

ELECTRICAL CONTROL AN SIGNAL
RISER DIAGRAMS 7

DATE: JULY 2015
SHEET: 294 OF 335
DRAWING: E-55

REQUEST FOR PROPOSAL

PLOT DATE: 7/24/2015 4:40 PM BY: TBOCAS
XREFs= ..\Tblock\44238-004-BP3-TB
File = H:\44238-004\Drawings\design build package\volume c - wtp rehab\Bid Package 3 - WTP Rehab\Electrical\44238-004BP3-E55 Saved by tbocas Save date = 5/27/2015 10:39 AM

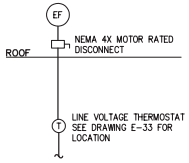

EF-50010 LP8-21 COAGULANT AREA
EF-50020 LP8-23 FLUORIDE AREA
EF-50030 LP8-25 AMMONIA AREA

EXHAUST FANS ELEMENTARY (CHEMICAL HANDLING FACILITY)

CONTRACTOR SHALL PROVIDE AND INSTALL LINE VOLTAGE THERMOSTATS AND DISCONNECT SWITCHES FOR EACH EXHAUST FAN.

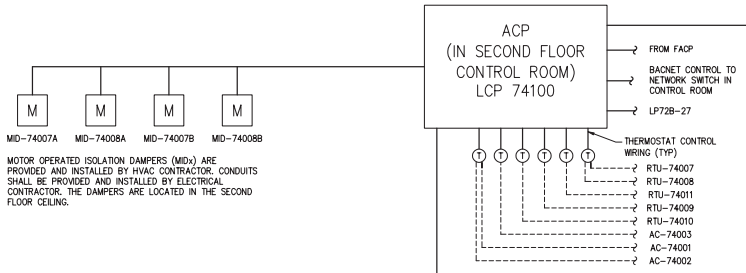

MOTOR OPERATED ISOLATION DAMPERS (MIDx) ARE PROVIDED AND INSTALLED BY HVAC CONTRACTOR. CONDUITS SHALL BE PROVIDED AND INSTALLED BY ELECTRICAL CONTRACTOR. THE DAMPERS ARE LOCATED IN THE SECOND FLOOR CEILING.

MOTOR OPERATED ISOLATION DAMPERS

MOTOR OPERATED ISOLATION DAMPER VOLTAGE IS 24V. CONTRACTOR SHALL COORDINATE WIRING REQUIREMENTS WITH HVAC CONTRACTOR.

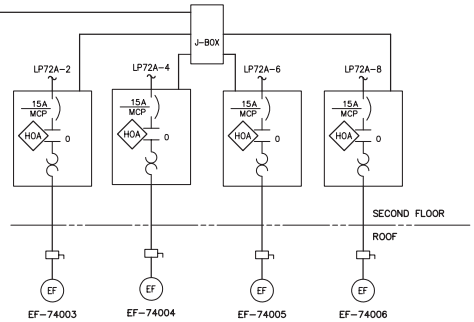

ADMINISTRATION BUILDING ROOF EXHAUST UNITS CONTROL RISER

EXHAUST FAN UNITS

NOTE: THE ATC COORDINATES AND CONTROLS THE RTU UNITS ON THE ROOF WITH THE EXHAUST FANS

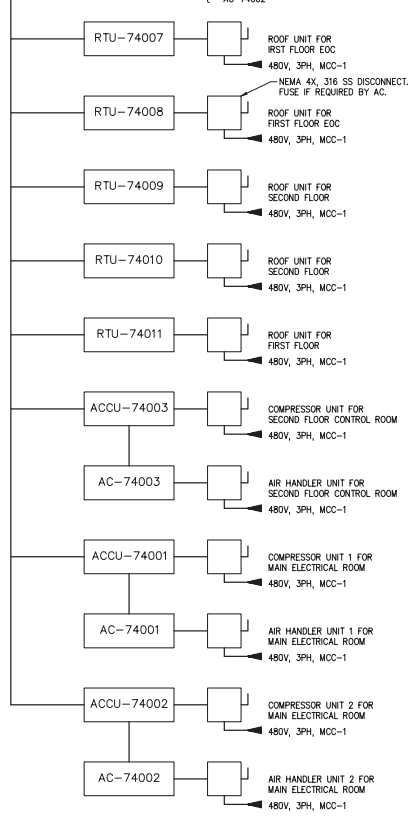

AIR CONDITIONING UNITS CONTROL RISER

NOTES:

1. THE ELECTRICAL CONTRACTOR SHALL FURNISH AND INSTALL ALL RACEWAYS FOR HVAC CONTROL AND MONITORING WIRING. WIRING REQUIREMENTS SHALL BE DETERMINED THROUGH COORDINATION BETWEEN ELECTRICAL AND HVAC CONTRACTORS.
2. ELECTRICAL CONTRACTOR SHALL FURNISH AND INSTALL A MINIMUM 200 LB TEST PULL LINE IN EACH EMPTY CONDUIT INSTALLED.
3. HVAC CONTRACTOR SHALL FURNISH AND INSTALL LOW VOLTAGE CONTROL WIRING FOR ADMINISTRATION BUILDING HVAC EQUIPMENT.

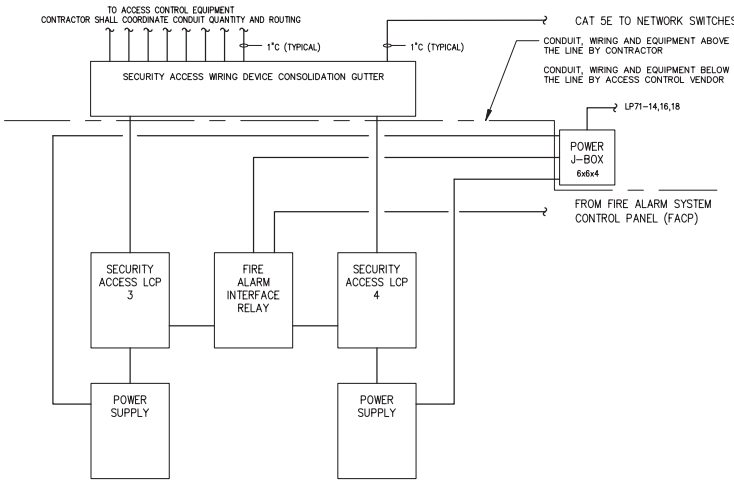

SECURITY ACCESS CONTROL PROPOSED EQUIPMENT LAYOUT

LOCATED IN ADMINISTRATION BUILDING FIRST FLOOR ROOM 108

NO.	DATE	ISSUED FOR	BY
1	07/24/15	REQUEST FOR PROPOSAL	G.A.B.

DESIGNED J.M.B.
DRAWN J.M.B.
CHECKED J.C.B.
PROJ. ENGR. J.C.B.

JOHN C. BURKE P.E.
No. 17301

HAZEN AND SAWYER
Environmental Engineers & Scientists
4000 Hollywood Boulevard, Suite 750N
Hollywood, Florida 33021
Certificate of Authorization Number: 2771

SCALE –

CLIENTS PROJECT: –
ENGINEERS PROJECT: 44238-004
CAD REFERENCE: 44238-004BP3-E56

NORTH MIAMI FLORIDA
CITY OF NORTH MIAMI
PUBLIC WORKS UTILITIES

WINSON WATER TREATMENT PLANT
RELIABILITY IMPROVEMENTS – VOLUME C: WTP REHAB

ELECTRICAL CONTROL AN SIGNAL RISER DIAGRAMS 8

DATE: JULY 2015
SHEET: 295 OF 335
DRAWING: E-56

REQUEST FOR PROPOSAL

PLOT DATE: 7/24/2015 4:40 PM BY: TBOCAS
XREFs= ..\Tblock\44238-004-BP3-TB
File = H:\44238-004\Drawings\design build package\volume c - wtp rehab\Bid Package 3 - WTP Rehab\Electrical\44238-004BP3-E56 Saved by tbocas Save date = 5/27/2015 10:39 AM

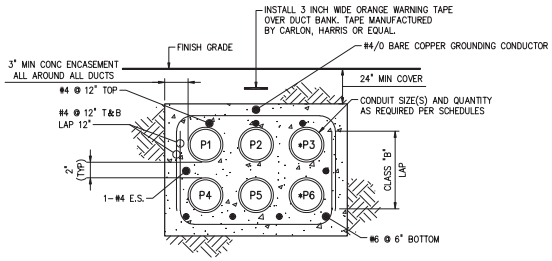

FPL SECONDARY SERVICE

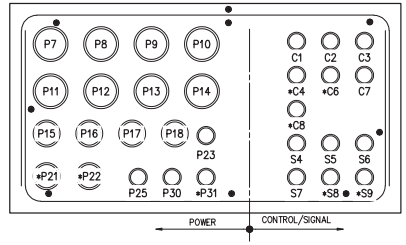

MH-E2 TO MH-E3 MH-C2 TO MH-C3

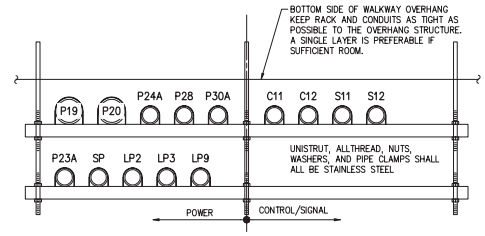

TRAPEZE STYLE CONDUIT RACK UNDER EXISTING FILTER BUILDING WALKWAY OVERHANG

THIS IS AN ALTERNATE IF CONDUITS CAN NOT BE INSTALLED UNDER EXISTING OVERHANG WALKWAY.

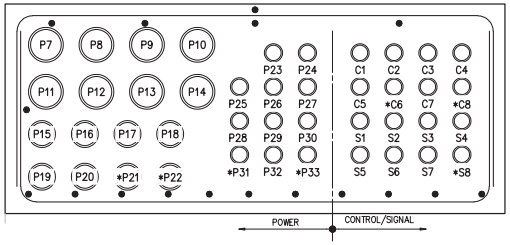

MAIN ELECTRICAL ROOM TO MH-E1 AND MH-C1

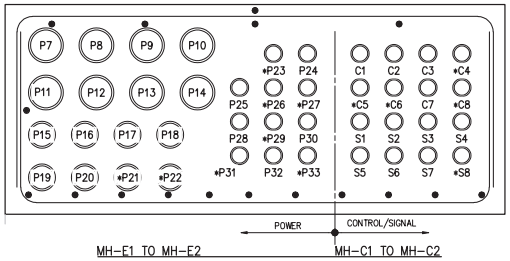

MH-E1 TO MH-E2 MH-C1 TO MH-C2

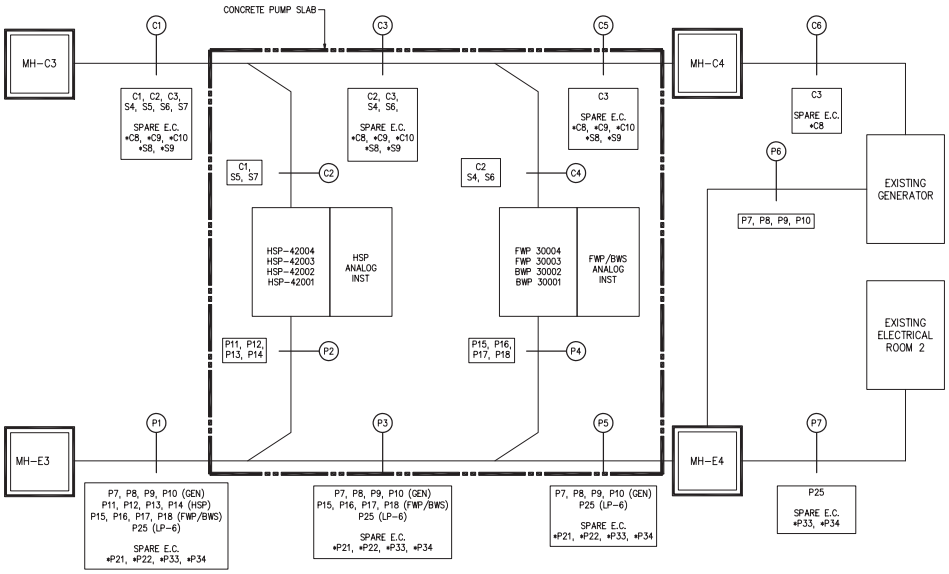

UNDERGROUND CONDUITS RISER FOR POWER, SIGNAL AND CONTROL DOWNSTREAM OF MANHOLES MH-C3 AND MH-E3

1. CONDUIT RUNS UNDER CONCRETE PUMP SLAB DO NOT REQUIRE CONCRETE ENCASEMENT.
2. DUCT BANK SECTION STYLES ON THIS DRAWING ALSO APPLY TO THIS AREA WHERE CONDUITS ARE NOT UNDER THE PUMP CONCRETE SLAB.

NOTES:

1. DIMENSIONS SHOWN ARE MINIMUM REQUIREMENTS AND SHALL BE MODIFIED TO SUIT FIELD CONDITIONS.
2. MINIMUM CONCRETE STRENGTH @ 28 DAYS SHALL BE 4,000 PSI.
3. LAP LONGITUDINAL STEEL MIN. 18 INCHES AT SPLICE AND JOINT LOCATIONS.
4. ALL NOTES AND RELATIVE DIMENSIONS INDICATED ON THE "FPL SECONDARY SERVICE" DUCT BANK DETAIL ARE TYPICAL FOR ALL OTHER DUCT BANK DETAILS ON THIS DRAWING.

LEGEND:

Px – POWER CONDUIT, ID
Cx – CONTROL CONDUIT, ID
Sx – SIGNAL CONDUIT, ID
*Px– SPARE EMPTY POWER CONDUIT, ID
*Cx– SPARE EMPTY CONTROL CONDUIT, ID
*Sx– SPARE EMPTY SIGNAL CONDUIT, ID
NOTE: ALL EMPTY CONDUITS SHALL HAVE PULL LINES INSTALLED.

SEE DRAWING E-58 FOR CONDUIT SCHEDULES

NO.	DATE	ISSUED FOR	BY
1	07/24/15	REQUEST FOR PROPOSAL	G.A.B.

DESIGNED J.M.B.
DRAWN H.F.M.
CHECKED J.C.B.
PROJ. ENGR. J.C.B.

JOHN C. BURKE P.E. No. 17301

HAZEN AND SAWYER
Environmental Engineers & Scientists
4000 Hollywood Boulevard, Suite 750N
Hollywood, Florida 33021
Certificate of Authorization Number: 2771

SCALE NTS

CLIENTS PROJECT: –
ENGINEERS PROJECT: 44238-004
CAD REFERENCE: 44238-004BP3-E57

NORTH MIAMI FLORIDA
CITY OF NORTH MIAMI
PUBLIC WORKS UTILITIES

WINSON WATER TREATMENT PLANT
RELIABILITY IMPROVEMENTS – VOLUME C: WTP REHAB

DUCT BANK SECTIONS

DATE: JULY 2015
SHEET: 296 OF 335
DRAWING: E-57

REQUEST FOR PROPOSAL

PLOT DATE: 7/24/2015 4:40 PM BY: TBOCAS
XREFs= ..\Tblock\44238-004-BP3-TB
File = H:\44238-004\Drawings\design build package\volume c - wtp rehab\Bid Package 3 - WTP Rehab\Electrical\44238-004BP3-E57 Saved by tbocas Save date = 5/27/2015 10:39 AM

POWER CONDUIT AND CABLE SCHEDULE

CONDUIT	SIZE	FROM	TO	CABLE	REMARKS
FPL	5	FPL SERVICE POLE	FPL PAD MOUNT TRANSFORMER	BY FPL	CONDUIT PROVIDED BY FPL AND INSTALLED BY CONTRACTOR
FPL	5	FPL SERVICE POLE	FPL PAD MOUNT TRANSFORMER	BY FPL	FPL SPARE CONDUIT
P1	4" C	FPL PAD MOUNT TRANSFORMER	MAIN ELEC ROOM MAIN SWITCHBOARD	3#600 MCM, 1#3/0 N	
P2	4" C	FPL PAD MOUNT TRANSFORMER	MAIN ELEC ROOM MAIN SWITCHBOARD	3#600 MCM, 1#3/0 N	
P3	4" C	FPL PAD MOUNT TRANSFORMER	MAIN ELEC ROOM MAIN SWITCHBOARD	E.C.	
P4	4" C	FPL PAD MOUNT TRANSFORMER	MAIN ELEC ROOM MAIN SWITCHBOARD	3#600 MCM, 1#3/0 N	
P5	4" C	FPL PAD MOUNT TRANSFORMER	MAIN ELEC ROOM MAIN SWITCHBOARD	3#600 MCM, 1#3/0 N	
P6	4" C	FPL PAD MOUNT TRANSFORMER	MAIN ELEC ROOM MAIN SWITCHBOARD	E.C.	
P7	4" C	MAIN ELEC ROOM ATS	GENERATOR	3#600 MCM, 1#3/0 G	
P8	4" C	MAIN ELEC ROOM ATS	GENERATOR	3#600 MCM, 1#3/0 G	
P9	4" C	MAIN ELEC ROOM ATS	GENERATOR	3#600 MCM, 1#3/0 G	
P10	4" C	MAIN ELEC ROOM ATS	GENERATOR	3#600 MCM, 1#3/0 G	
P11	4" C	MAIN ELEC ROOM – MCC–3	HSP–42001	3#350 MCM, 1#4G 3#12	VFD ARMORED CABLE SEE SECTION 16120
P12	4" C	MAIN ELEC ROOM – MCC–3	HSP–42002	3#350 MCM, 1#4G 3#12	VFD ARMORED CABLE SEE SECTION 16120
P13	4" C	MAIN ELEC ROOM – MCC–3	HSP–42003	3#350 MCM, 1#4G 3#12	VFD ARMORED CABLE SEE SECTION 16120
P14	4" C	MAIN ELEC ROOM – MCC–3	HSP–42004	3#350 MCM, 1#4G 3#12	VFD ARMORED CABLE SEE SECTION 16120
P15	3" C	MAIN ELEC ROOM – MCC–2	BWS–30001	3#3/0, 1#6G 3#12	VFD ARMORED CABLE SEE SECTION 16120
P16	3" C	MAIN ELEC ROOM – MCC–2	BWS–30002	3#3/0, 1#6G 3#12	VFD ARMORED CABLE SEE SECTION 16120
P17	3" C	MAIN ELEC ROOM – MCC–2	FWP–30003	3#2/0, 1#6G 3#12	VFD ARMORED CABLE SEE SECTION 16120
P18	3" C	MAIN ELEC ROOM – MCC–2	FWP–30004	3#2/0, 1#6G 3#12	VFD ARMORED CABLE SEE SECTION 16120
P19	3" C	MAIN ELEC ROOM MAIN SWITCHBOARD	EXISTING PANEL DP1	3#350 MCM, #1G	
P20	3" C	MAIN ELEC ROOM MAIN SWITCHBOARD	EXISTING PANEL DP1	3#350 MCM, #1G	
P21	3" C	MAIN ELEC ROOM	MH–E4	E.C.	
P22	3" C	MAIN ELEC ROOM	MH–E4	E.C.	
P23	2" C	MAIN ELEC ROOM – LP70	SITE LIGHTING	SEE LIGHTING DETAILS	VIA LIGHTING CONTROLLER
P24	2" C	MAIN ELEC ROOM – MCC–2	LIME CONTACTOR ACC–22000, OLP–22000	3#10, 1#12G 3#12, 1#12G	
P25	2" C	MAIN ELEC ROOM – MCC–2	EXISTING PANEL LP–6	3#6, 1#10G	VIA TRANSFORMER TX4 DISC SW.
P26	2" C	MAIN ELEC ROOM – MCC–2	WASTE BASIN DECANT WPB–62001 WASTE BASIN DECANT WPB–62002	3#8, 1#10G 3#8, 1#10G	
P27	2" C	MAIN ELEC ROOM – MCC–2	LCP–60000 WASTE LIME SLUDGE	3#6, 1#10G	
P28	2" C	MAIN ELEC ROOM – MCC–2	RAW WATER WELL NO. 1 LCP–11001	3#6, 1#8G	
P29	2" C	MAIN ELEC ROOM – MCC–2	BACKWASH HOLDING WBR–62003 BACKWASH HOLDING WBR–62004	3#10, 1#12G 3#10, 1#12G	
P30	2" C	MAIN ELEC ROOM – MCC–2	SAMPLE PUMP AIR AIP–22100 SAMPLE PUMP AIR AIP–41500	3#12, 1#12G 3#12, 1#12G	
P31	2" C	MAIN ELEC ROOM	MH–E3	E.C.	
P32	2" C	MAIN ELEC ROOM – LP70	MOG 77200	3#12, 1#12G	
			MOG 77300	3#12, 1#12G	
			MOG 77600	3#12, 1#12G	
P33	2" C	MH–E3	ELECTRICAL BUILDING 2	E.C.	
P34	2" C	MH–E3	ELECTRICAL BUILDING 2	E.C.	

CONTROL / SIGNAL CONDUIT AND CABLE SCHEDULE

CONDUIT	SIZE	FROM	TO	CABLE	REMARKS
C1	2" C	MAIN ELEC ROOM – MCC–3	HSP 42001, HSP 42002 HSP 42003, HSP 42004	12#12, 1#12G PER PUMP	
C2	2" C	MAIN ELEC ROOM – MCC–2	BWS 30001, BWS 30002 FWP 30003, FWP 30004	8#12, 1#12G PER PUMP	
C3	2" C	MAIN ELEC ROOM ATS	GENERATOR	20#12, 1#12G	CONTROL
C4	2" C	ADMIN BLDG ACCESS CONTROL HARDWARE	MOG–77200 S.W. GATE	COORDINATE QUANTITY AND TYPE WITH EQUIPMENT VENDOR	MOTORIZED ACCESS GATES: INCLUDES INTERCOM, CARD READER/CAMERA, GATE OPERATOR COMMAND AND STATUS
C5	2" C	MAIN ELEC ROOM – MCC–2	WBP 62001, WBP 62002 WBR 62003, WBR 62004	5#12, 1#12G PER PUMP 3#12, 1#12G PER PUMP	CONTROL SWITCH HIGH PRESSURE SW
C6	2" C	ADMIN BLDG ACCESS CONTROL HARDWARE	MOG–77300 N.W. GATE	COORDINATE QUANTITY AND TYPE WITH EQUIPMENT VENDOR	MOTORIZED ACCESS GATES: INCLUDES INTERCOM, CARD READER/CAMERA, GATE OPERATOR COMMAND AND STATUS
C7	2" C	ADMIN BLDG ACCESS CONTROL HARDWARE	MOG–77600 N.E. GATE	COORDINATE QUANTITY AND TYPE WITH EQUIPMENT VENDOR	MOTORIZED ACCESS GATES: INCLUDES INTERCOM, CARD READER/CAMERA, GATE OPERATOR COMMAND AND STATUS
C8	2" C	MAIN ELEC ROOM	GENERATOR	E.C.	
C9	2" C	MH–C3	MH–C4	E.C.	
C10	2" C	MH–C3	MH–C4	E.C.	
S1	2" C	ADMIN BUILDING	IN EXISTING FILTER BUILDING CONTROL ROOM	FIBER OPTIC CABLE	PLCS, CAMERAS, TELEPHONES
S2	2" C	ADMIN BUILDING	IN EXISTING FILTER BUILDING CONTROL ROOM	FIBER OPTIC CABLE	PLCS, CAMERAS, TELEPHONES
S3	2" C	ADMIN BUILDING	IN EXISTING FILTER BUILDING CONTROL ROOM	2 CAT 6	TELEPHONES
S4	2" C	PLC–70000	PIT 30001, PIT 30002, PIT 30003, PIT 30004, FIT 30005	10 TSP	
S5	2" C	MCC–3	HSP 42001, HSP 42002 HSP 42003, HSP 42004	10 TSP	
S6	2" C	MCC–2	BWS 30001 BWS 30002 FWP 30003 FWP 30004	10 TSP	
S7	2" C	MAIN ELEC ROOM	PIT 42001, PIT 42002, PIT 42003, PIT 42004, FIT 43000, PIT 43000	10 TSP	
S8	2" C	MAIN ELEC ROOM	MH–C4	E.C.	
S9	2" C	MH–C2	MH–C4	E.C.	
COM1	2" C	PROPERTY LINE TELEPHONE PULL BOX	ATT TELEPHONE SERVICE ACCESS PT.	BY ATT	
COM1	2" C	PROPERTY LINE COMCAST PULL BOX	COMCAST SERVICE ACCESS PT.	BY COMCAST	

FILTER BUILDING WALKWAY CONDUIT AND CABLE SCHEDULE

CONDUIT	SIZE	FROM	TO	CABLE	REMARKS
P19	3"C	MAIN SWBD	EXISTING PANEL DPI	3#350 MCM, 8#1G	
P20	3"C	MAIN SWBD	EXISTING PANEL DPI	3#350 MCM, 8#1G	
P24A	1 1/4"C	MCC–2	LIME CONTACTOR ACC 22000	3#6, 1#10G	
P28	1 1/2"C	MCC–2	RAW WATER WELL NO. 1 LCP	3#3, 1#8G	
P30A	3/4"C	MCC–2	SAMPLE PUMP AIR AIP–22100	3#12, 1#12G	
P23	1"C	LP70 VIA LIGHTING CONTROLLER	SITE LIGHTING	3#10, 1#10G	
S1	2"C	MAIN ELEC RM VIA MH'S 1 & 2	EXISTING CONTROL ROOM	FOC	PLC, CAMERAS, TELEPHONES
S2	2"C	MAIN ELEC RM VIA MH'S 1 & 2	EXISTING CONTROL ROOM	FOC	PLC, CAMERAS, TELEPHONES
S3	2"C	MAIN ELEC RM VIA MH'S 1 & 2	EXISTING CONTROL ROOM	2 CAT 6	TELEPHONES
S11	1"C	FILTER BLDG CTRL ROOM	VID 76020	CAT 5E	
S12	1"C	FILTER BLDG CTRL ROOM	VID 76021	CAT 5E	
C11	2"C	FILTER BLDG CTRL ROOM	MOG–77100 CONTROL WIRING	COORDINATE QUANTITY AND TYPE WITH EQUIPMENT VENDOR	MOTORIZED ACCESS GATES: INCLUDES INTERCOM, CARD READER/CAMERA, GATE OPERATOR COMMAND AND STATUS
C12	2"C	FILTER BLDG CTRL ROOM	MOG–77500 CONTROL WIRING	COORDINATE QUANTITY AND TYPE WITH EQUIPMENT VENDOR	MOTORIZED ACCESS GATES: INCLUDES INTERCOM, CARD READER/CAMERA, GATE OPERATOR COMMAND AND STATUS
LP2	2"C	DISTRIBUTION PANELBOARD DP2	PANEL LP2	2#4, 1#8G	
LP3	3/4"C	DISTRIBUTION PANELBOARD DP2	PANEL LP3	2#10, 1#12G	
LP9	2"C	DISTRIBUTION PANELBOARD DP2	PANEL LP9	3#3/0, 1#6G	

REQUEST FOR PROPOSAL

NO.	DATE	ISSUED FOR	BY
1	07/24/15	REQUEST FOR PROPOSAL	G.A.B.

PLOT DATE: 7/24/2015 4:40 PM BY: TBOCAS

DESIGNED J.M.B.
DRAWN L.M.S.
CHECKED J.C.B.
PROJ. ENGR. J.C.B.

JOHN C. BURKE P.E.
No. 17301

HAZEN AND SAWYER
Environmental Engineers & Scientists
4000 Hollywood Boulevard, Suite 750N
Hollywood, Florida 33021
Certificate of Authorization Number: 2771

SCALE NTS

CLIENTS PROJECT: –
ENGINEERS PROJECT: 44238–004
CAD REFERENCE: 44238–004BP3–E58

NORTH MIAMI FLORIDA
CITY OF NORTH MIAMI
PUBLIC WORKS UTILITIES

WINSON WATER TREATMENT PLANT
RELIABILITY IMPROVEMENTS – VOLUME C: WTP REHAB
DUCT BANK SCHEDULES

DATE: JULY 2015
SHEET: 297 OF 335
DRAWING: E–58

XREFs= ..\Tblock\44238–004–BP3–TB

File = H:\44238–004\Drawings\design build package\volume c – wtp rehab\Bid Package 3 – WTP Rehab\Electrical\44238–004BP3–E58 Saved by tbocas Save date = 5/27/2015 10:39 AM

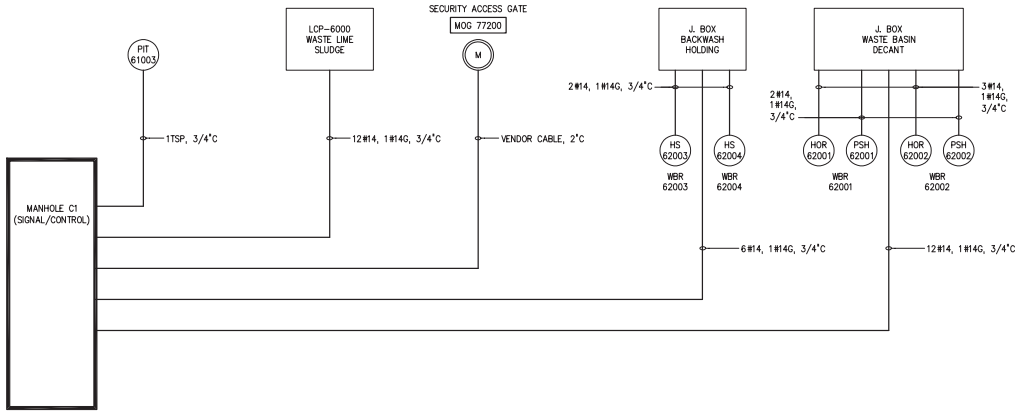

SIGNAL/CONTROL RISER MANHOLE No.C1

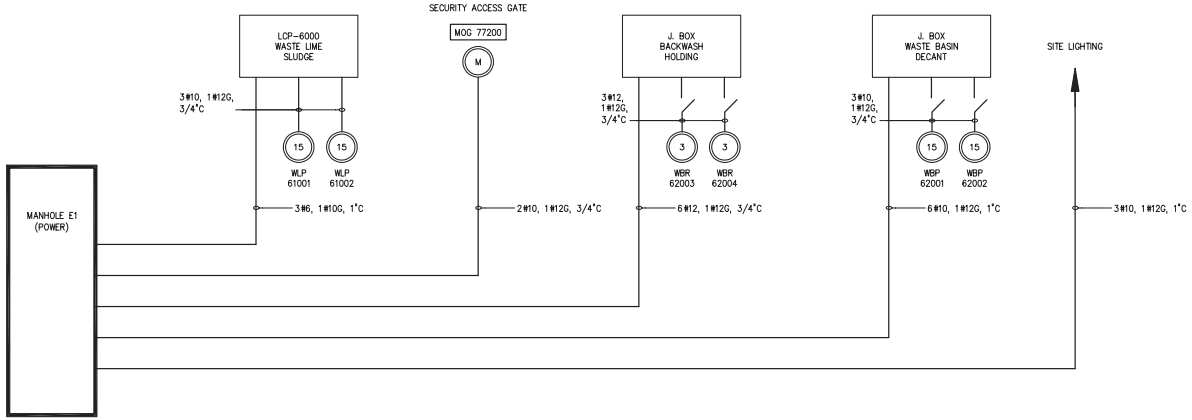

POWER RISER MANHOLE No.E1

NO.	DATE	ISSUED FOR	BY
1	07/24/15	REQUEST FOR PROPOSAL	G.A.B.

DESIGNED J.M.B.
DRAWN L.M.S.
CHECKED J.C.B.
PROJ. ENGR. J.C.B.

JOHN C. BURKE P.E.
No. 17301

HAZEN AND SAWYER
Environmental Engineers & Scientists
4000 Hollywood Boulevard, Suite 750N
Hollywood, Florida 33021
Certificate of Authorization Number: 2771

SCALE NTS

CLIENTS PROJECT: –
ENGINEERS PROJECT: 44238-004
CAD REFERENCE: 44238-004BP3-E59

NORTH MIAMI FLORIDA
CITY OF NORTH MIAMI
PUBLIC WORKS UTILITIES

WINSON WATER TREATMENT PLANT
RELIABILITY IMPROVEMENTS – VOLUME C: WTP REHAB

MANHOLES – E1 AND C1 CONDUIT RISERS

DATE: JULY 2015
SHEET: 298 OF 335
DRAWING: E-59

REQUEST FOR PROPOSAL

PLOT DATE: 7/24/2015 4:40 PM BY: TBOCAS

XREFs= ..\Tblock\44238-004-BP3-TB

File = H:\44238-004\Drawings\design build package\volume c - wtp rehab\Bid Package 3 - WTP Rehab\Electrical\44238-004BP3-E59 Saved by jbroad Save date = 12/16/2013 2:51 PM

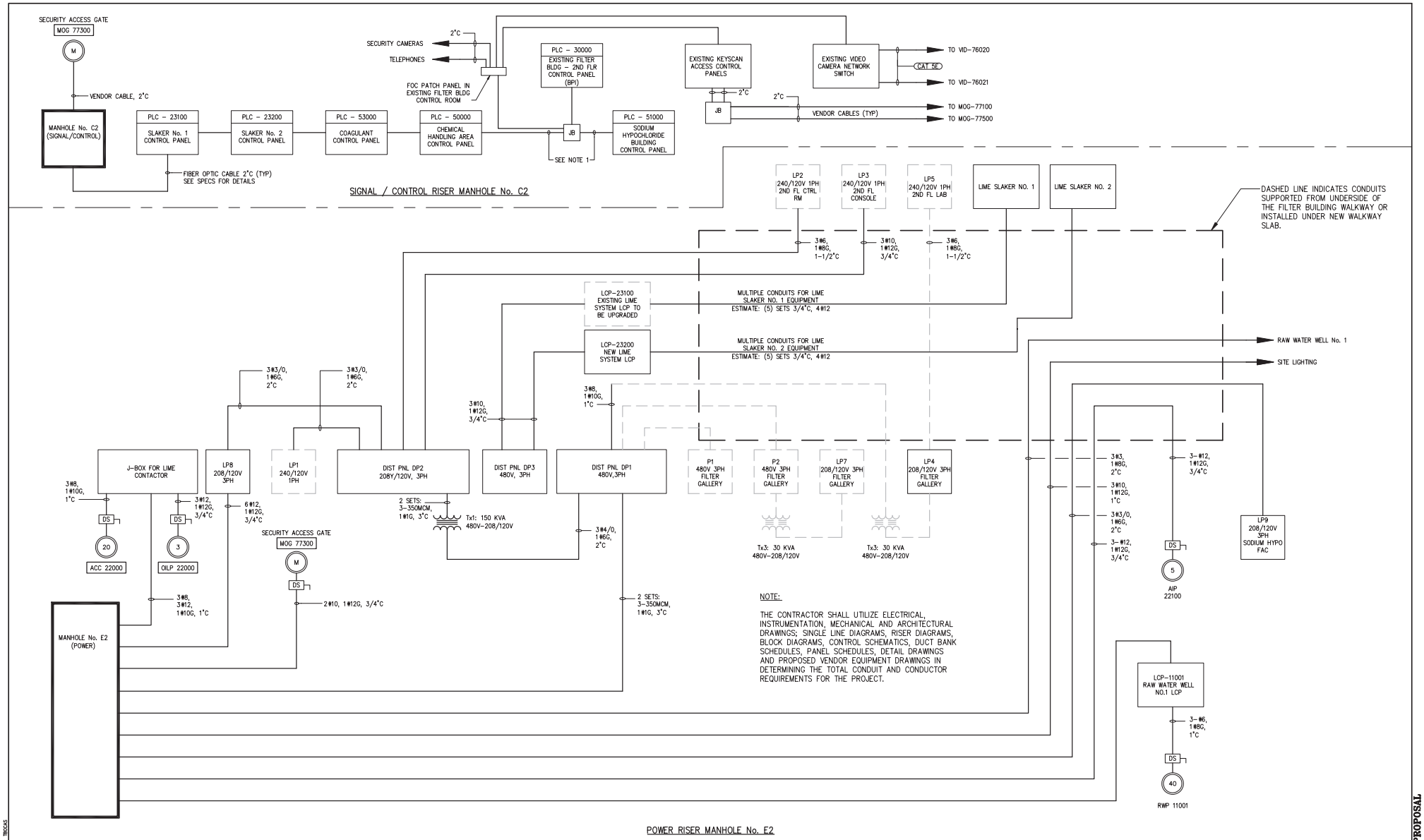

NO.	DATE	ISSUED FOR	BY
1	07/24/15	REQUEST FOR PROPOSAL	G.A.B.

DESIGNED J.M.B.
DRAWN L.M.S.
CHECKED J.C.B.
PROJ. ENGR. J.C.B.

JOHN C. BURKE P.E. No. 17301

HAZEN AND SAWYER
Environmental Engineers & Scientists
4000 Hollywood Boulevard, Suite 750N
Hollywood, Florida 33021
Certificate of Authorization Number: 2771

SCALE NTS

CLIENTS PROJECT: –
ENGINEERS PROJECT: 44238-004
CAD REFERENCE: 44238-004BP3-E60

CITY OF NORTH MIAMI
PUBLIC WORKS UTILITIES

WINSON WATER TREATMENT PLANT
RELIABILITY IMPROVEMENTS – VOLUME C: WTP REHAB

MANHOLES – E2 AND C2 CONDUIT RISERS

DATE: JULY 2015
SHEET: 299 OF 335
DRAWING: E-60

REQUEST FOR PROPOSAL

PLOT DATE: 7/24/2015 4:40 PM BY: TBOCAS
XREFs= ..\Tblock\44238-004-BP3-TB
File = H:\44238-004\Drawings\design build package\volume c - wtp rehab\Bid Package 3 - WTP Rehab\Electrical\44238-004BP3-E60 Saved by jbroad Save date = 12/16/2013 3:09 PM

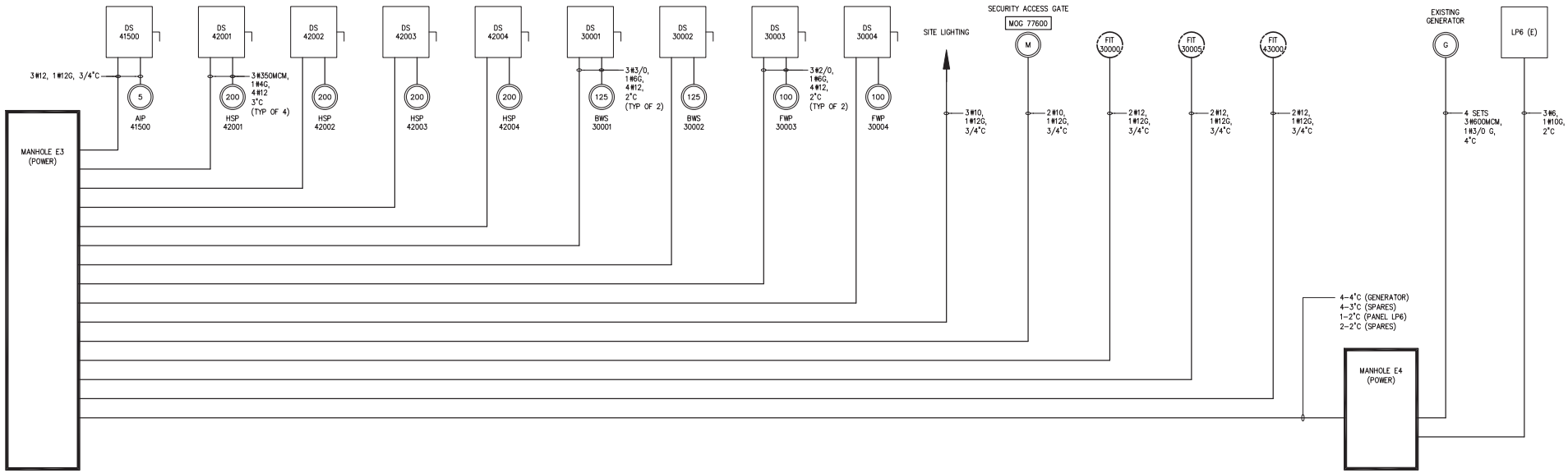

POWER RISER MANHOLES
No.E3 AND E4

NO.	DATE	ISSUED FOR	BY
1	07/24/15	REQUEST FOR PROPOSAL	G.A.B.

DESIGNED J.M.B.
DRAWN L.M.S.
CHECKED J.C.B.
PROJ. ENGR. J.C.B.

JOHN C. BURKE P.E.
No. 17301

HAZEN AND SAWYER
Environmental Engineers & Scientists
4000 Hollywood Boulevard, Suite 750N
Hollywood, Florida 33021
Certificate of Authorization Number: 2771

SCALE NTS

CLIENTS PROJECT: –
ENGINEERS PROJECT: 44238-004
CAD REFERENCE: 44238-004BP3-E61

CITY OF NORTH MIAMI
PUBLIC WORKS UTILITIES

WINSON WATER TREATMENT PLANT
RELIABILITY IMPROVEMENTS – VOLUME C: WTP REHAB
MANHOLES – E3 AND E4 CONDUIT RISERS

DATE: JULY 2015
SHEET: 300 OF 335
DRAWING: E-61

REQUEST FOR PROPOSAL

PLOT DATE: 7/24/2015 4:40 PM BY: TBOCAS
XREFs= ..\Tblock\44238-004-BP3-TB
File = H:\44238-004\Drawings\design build package\volume c - wtp rehab\Bid Package 3 - WTP Rehab\Electrical\44238-004BP3-E61 Saved by jbroad Save date = 12/16/2013 2:51 PM

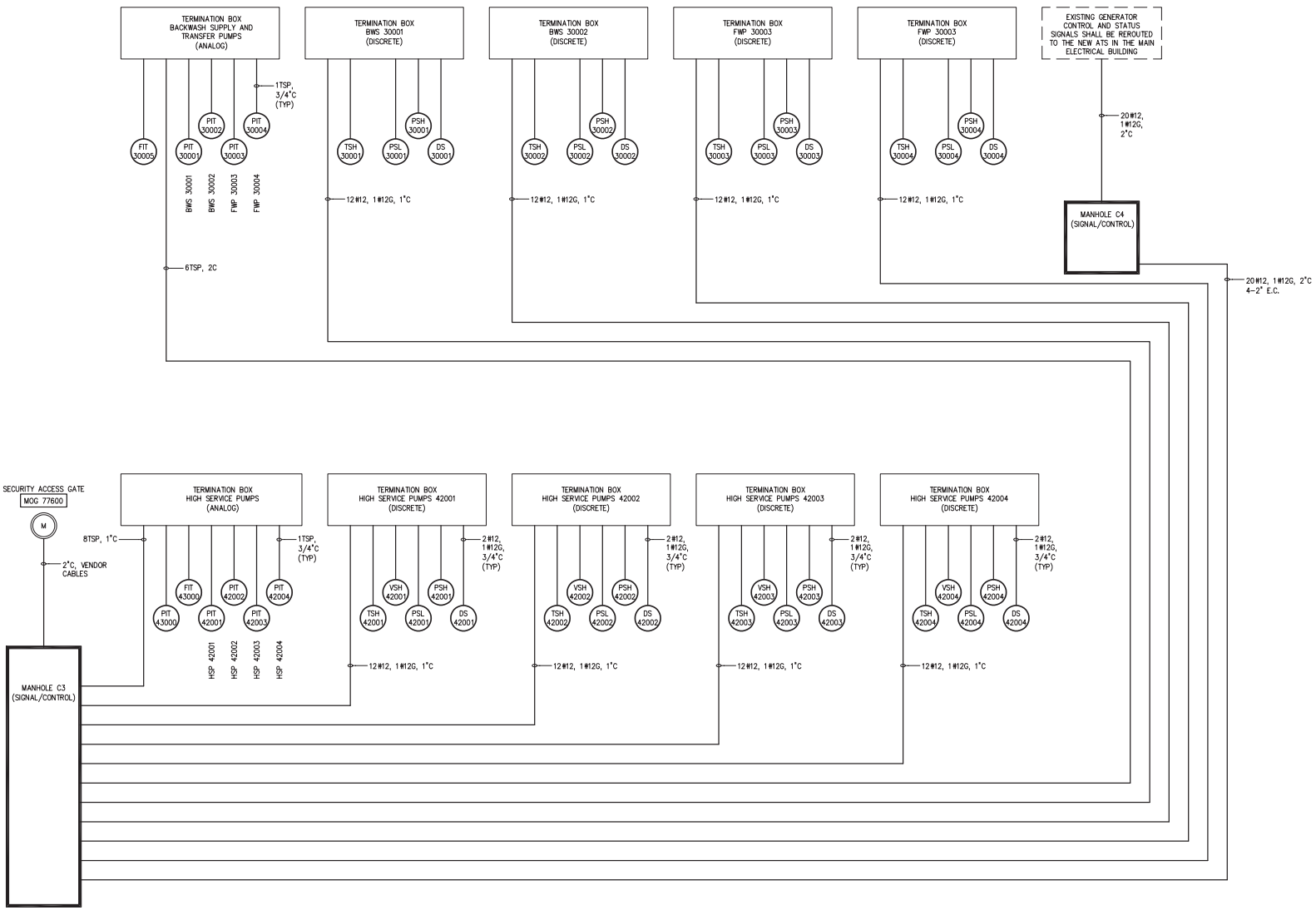

SIGNAL/CONTROL RISER MANHOLE NOs. C3 AND C4

NO.	DATE	ISSUED FOR	BY
1	07/24/15	REQUEST FOR PROPOSAL	G.A.B.

DESIGNED J.M.B.
DRAWN L.M.S.
CHECKED J.C.B.
PROJ. ENGR. J.C.B.

JOHN C. BURKE P.E.
No. 17301

HAZEN AND SAWYER
Environmental Engineers & Scientists
4000 Hollywood Boulevard, Suite 750N
Hollywood, Florida 33021
Certificate of Authorization Number: 2771

SCALE NTS

CLIENTS PROJECT: –
ENGINEERS PROJECT: 44238-004
CAD REFERENCE: 44238-004BP3-E62

NORTH MIAMI FLORIDA
CITY OF NORTH MIAMI
PUBLIC WORKS UTILITIES

WINSON WATER TREATMENT PLANT
RELIABILITY IMPROVEMENTS – VOLUME C: WTP REHAB
MANHOLES – C3 AND C4 CONDUIT RISERS

DATE: JULY 2015
SHEET: 301 OF 335
DRAWING: E-62

REQUEST FOR PROPOSAL

PLOT DATE: 7/24/2015 4:41 PM BY: TBOCAS
XREFs= ..\Tblock\44238-004-BP3-TB
File = H:\44238-004\Drawings\design build package\volume c - wtp rehab\Bid Package 3 - WTP Rehab\Electrical\44238-004BP3-E62 Saved by jbroad Save date = 12/16/2013 2:51 PM

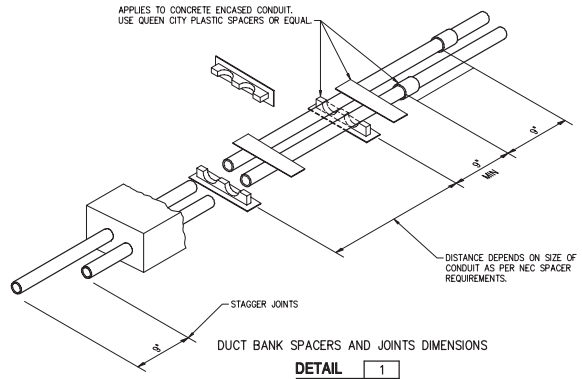

DUCT BANK SPACERS AND JOINTS DIMENSIONS

DETAIL 1 — NTS –

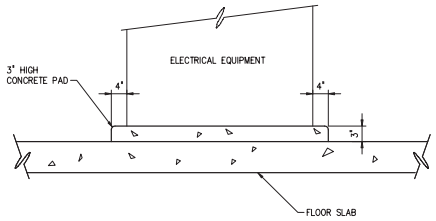

EQUIPMENT HOUSEKEEPING PAD

DETAIL 2 — NTS –

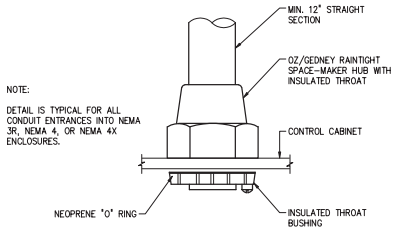

CONDUIT HUB

DETAIL 3 — NTS –

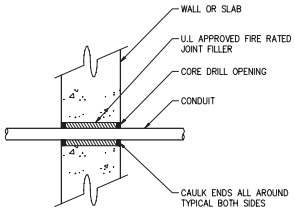

CONDUIT PENETRATION AT WALL OR SLAB

DETAIL 4 — NTS –

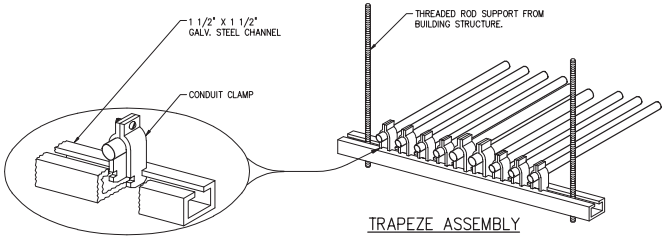

CONDUIT PIPE STRAP MOUNTING DETAILS

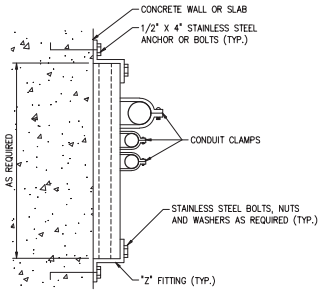

NOTES:

1. THIS DETAIL TYPICAL FOR BOTH VERTICAL AND HORIZONTAL MOUNTING.
2. CHANNEL AND ALL SUPPORT DEVICES TO BE HOT DIP GALVANIZED STEEL. FIELD COAT ALL CUT, ETC. 5" MAXIMUN.
3. CHANNELS TO BE SPACED 5' MAXIMUN.

CONDUIT SUPPORTS

DETAIL 5 — NTS –

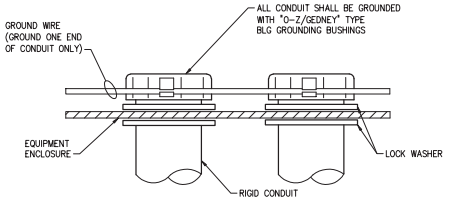

CONDUIT GROUNDING

DETAIL 6 — NTS –

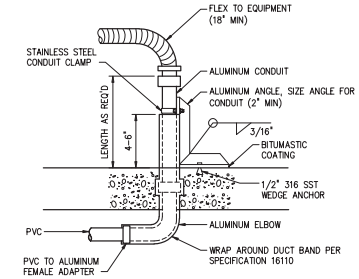

SLAB PENETRATIONS

DETAIL 7 — NTS –

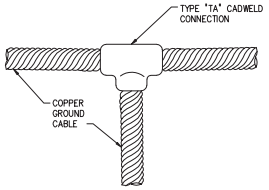

GROUND CABLE CONNECTION

DETAIL 8 — NTS –

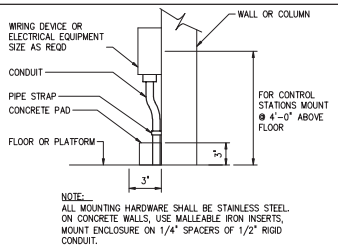

NOTE:
ALL MOUNTING HARDWARE SHALL BE STAINLESS STEEL. ON CONCRETE WALLS, USE MALLEABLE IRON INSERTS, MOUNT ENCLOSURE ON 1/4" SPACERS OF 1/2" RIGID CONDUIT.

WALL OR COLUMN MOUNTED DEVICE

DETAIL 9 — NTS –

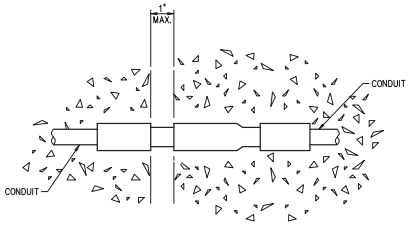

EXPANSION COUPLING

DETAIL 10 — NTS –

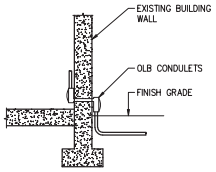

CONDUIT WALL PENETRATION

DETAIL 11 — NTS –

NO.	DATE	ISSUED FOR	BY
1	07/24/15	REQUEST FOR PROPOSAL	G.A.B.

DESIGNED J.M.B.
DRAWN G.P.B.
CHECKED J.C.B.
PROJ. ENGR. J.C.B.

JOHN C. BURKE P.E.
No. 17301

HAZEN AND SAWYER
Environmental Engineers & Scientists
4000 Hollywood Boulevard, Suite 750N
Hollywood, Florida 33021
Certificate of Authorization Number: 2771

SCALE: NTS

CLIENTS PROJECT: –
ENGINEERS PROJECT: 44238-004
CAD REFERENCE: 44238-004BP3-E63

NORTH MIAMI FLORIDA
CITY OF NORTH MIAMI
PUBLIC WORKS UTILITIES

WINSON WATER TREATMENT PLANT
RELIABILITY IMPROVEMENTS – VOLUME C: WTP REHAB

ELECTRICAL DETAILS
SHEET 1

DATE: JULY 2015
SHEET: 302 OF 335
DRAWING: E-63

REQUEST FOR PROPOSAL

PLOT DATE: 7/24/2015 4:41 PM BY: TBOCAS
XREFs= ..\Tblock\44238-004-BP3-TB
File = H:\44238-004\Drawings\design build package\volume c - wtp rehab\Bid Package 3 - WTP Rehab\Electrical\44238-004BP3-E63 Saved by randersen Save date = 6/9/2014 12:44 PM

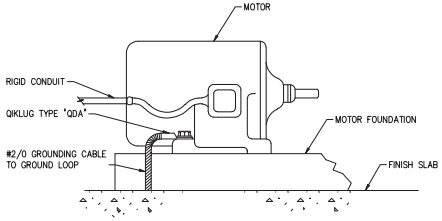

NOTE:

THIS GROUND IS IN ADDITION TO THE GROUND FROM THE MAIN ELECTRICAL SERVICE.

EQUIPMENT GROUNDING

DETAIL 12
NTS –

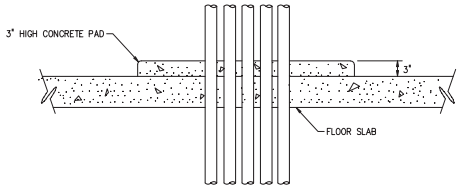

CONDUIT HOUSEKEEPING PAD

DETAIL 13
NTS –

NOT USED

DETAIL 14
NTS –

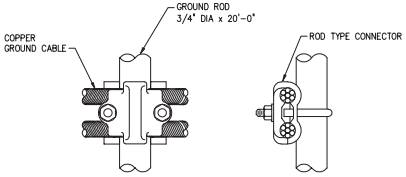

CABLE TO ROD CONNECTION

DETAIL 15
NTS –

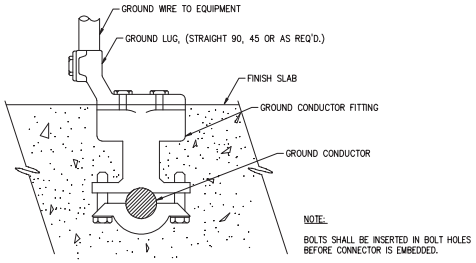

NOTE:

BOLTS SHALL BE INSERTED IN BOLT HOLES BEFORE CONNECTOR IS EMBEDDED.

GROUNDING INSERT

DETAIL 16
NTS –

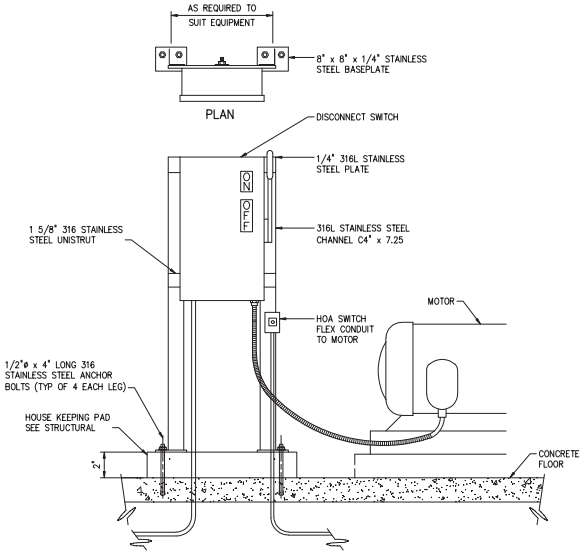

DISCONNECT PEDESTAL

DETAIL 17
NTS –

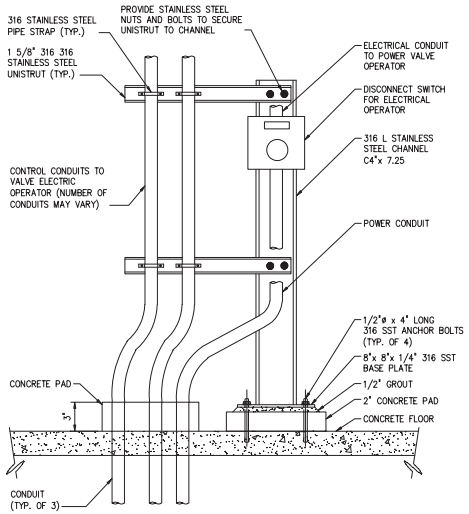

MOTOR OPERATED VALVE DISCONNECT PEDESTAL

DETAIL 18
NTS –

NO.	DATE	ISSUED FOR	BY
1	07/24/15	REQUEST FOR PROPOSAL	G.A.B.

DESIGNED J.M.B.
DRAWN G.P.B.
CHECKED J.C.B.
PROJ. ENGR. J.C.B.

JOHN C. BURKE P.E.
No. 17301

HAZEN AND SAWYER
Environmental Engineers & Scientists
4000 Hollywood Boulevard, Suite 750N
Hollywood, Florida 33021
Certificate of Authorization Number: 2771

SCALE NTS

CLIENTS PROJECT: –
ENGINEERS PROJECT: 44238-004
CAD REFERENCE: 44238-004BP3-E64

NORTH MIAMI FLORIDA
CITY OF NORTH MIAMI
PUBLIC WORKS UTILITIES

WINSON WATER TREATMENT PLANT
RELIABILITY IMPROVEMENTS – VOLUME C: WTP REHAB

ELECTRICAL DETAILS
SHEET 2

DATE: JULY 2015
SHEET: 303 OF 335
DRAWING: E-64

REQUEST FOR PROPOSAL

PLOT DATE: 7/24/2015 4:41 PM BY: TBOCAS
XREFs= ..\Tblock\44238-004-BP3-TB
File = H:\44238-004\Drawings\design build package\volume c - wtp rehab\Bid Package 3 - WTP Rehab\Electrical\44238-004BP3-E64 Saved by jbroad Save date = 12/20/2013 11:22 AM

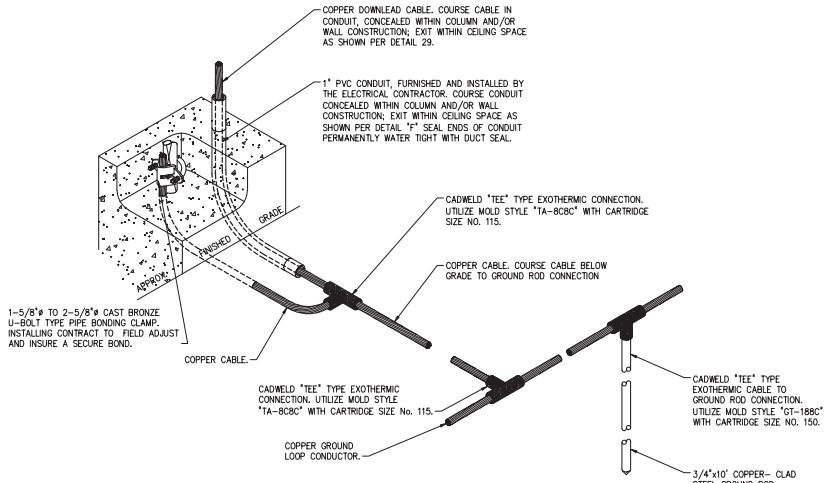

CONCEALED DOWN LEAD TO GROUNDING CONN

DETAIL 19
NTS –

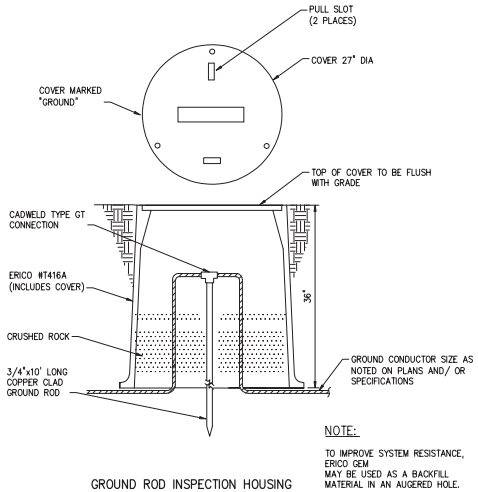

NOTE:

TO IMPROVE SYSTEM RESISTANCE, ERICO GEM MAY BE USED AS A BACKFILL MATERIAL IN AN AUGERED HOLE.

GROUND ROD INSPECTION HOUSING

DETAIL 20
NTS –

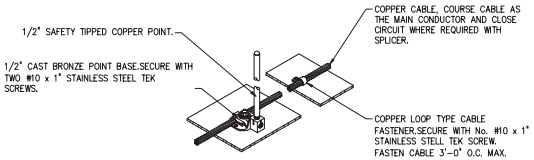

ADHESIVE AIR TERMINAL

DETAIL 22
NTS –

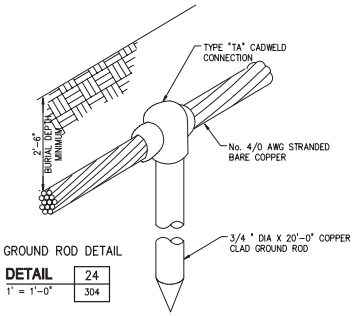

GROUND ROD DETAIL

DETAIL 24
1" = 1'-0" 304

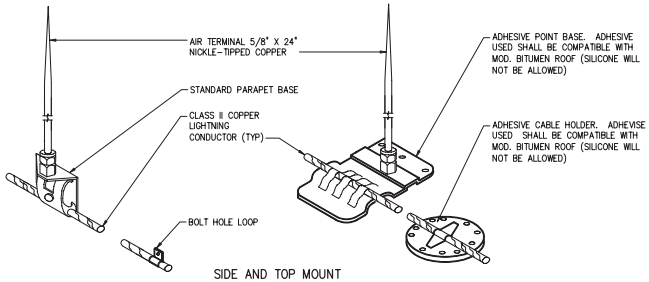

SIDE AND TOP MOUNT

DETAIL 23
NTS –

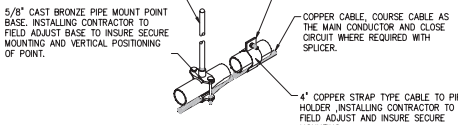

HAND RAIL TERMINAL

DETAIL 21
NTS –

LIGHTNING PROTECTION NOTES

1. THE PLAN AND DETAILS ARE A GUIDE FOR THE DESIGN, FURNISHING, AND INSTALLATION OF LIGHTNING PROTECTION SYSTEM. THE ELECTRICAL CONTRACTOR IS RESPONSIBLE TO PROVIDE A COMPLETE AND FUNCTIONING SYSTEM.
2. THE LIGHTNING PROTECTION SYSTEM AS SHALL BE DESIGNED AND INSTALLED IN ACCORDANCE WITH UL96 & NFPA-780 LIGHTNING PROTECTION SYSTEM STANDARDS.
3. CONDUCTORS SHALL MAINTAIN A HORIZONTAL OR DOWNWARD COURSE, FREE FROM "U" OR "V" (DOWN AND UP) POCKETS.
4. NO BEND OF CONDUCTOR SHALL FORM AN ANGLE OF LESS THAN 90° NOR SHALL HAVE A RADIUS OF BEND LESS THAN 8".
5. AIR TERMINALS SHALL BE SPACED EVERY 20'-0" MAXIMUM AROUND THE ROOF PERIMETER AND/OR ALONG ROOF RIDGES. AIR TERMINALS SHALL BE LOCATED WITHIN 2'-0" OF OUTSIDE CORNERS.
6. AIR TERMINALS SHALL BE SPACED EVERY 50'-0" MAXIMUM IN CENTER ROOF AREAS.
7. ACTUAL JOBSITE CONDITIONS MAY REQUIRE SLIGHT ALTERATIONS IN AIR TERMINAL, DOWN CONDUCTOR AND GROUND ROD LOCATIONS.
8. BARE COPPER MATERIALS SHALL NOT BE INSTALLED ON ALUMINUM OR GALVALUM SURFACES, AND ALUMINUM MATERIALS SHALL NOT BE INSTALLED ON COPPER SURFACES.
9. ALL LIGHTNING PROTECTION CONDUCTORS SHALL BE FASTENED EVERY 3'-0" MAX.
10. ALL BOLTS ON BOLT-PRESSURE CONNECTORS SHALL BE TORQUED AT 150 POUND-INCHES (17N-m).
11. ALL CONNECTIONS MUST BE USED WITH UL LISTED CLASS I OR CLASS II CABLE OF SAME METAL TYPE.
12. BOND TO WATERLINES (DOMESTIC & FIRE).
13. A LIGHTNING ARRESTOR, PROTECTOR OR ANTENNA DISCHARGE UNIT SHALL BE INSTALLED ON EACH ELECTRIC AND TELEPHONE SERVICE AND RADIO AND TELEVISION ANTENNA LEAD-IN BY THE ELECTRICAL CONTRACTOR, IN ACCORDANCE WITH NFPA-70.
14. TRANSIENT VOLTAGE SURGE SUPPRESSION (TVSS) OF SERVICES SHALL BE PROVIDED BY THE ELECTRICAL CONTRACTOR. (I.E. COMPUTERS, COPIERS, TELEPHONE, ETC.).
15. ALL CONNECTIONS MADE IN LIGHTNING PROTECTION SYSTEM SHALL BE ELECTRICALLY CONTINUOUS TO GROUND RODS.
16. ELECTRICAL CONTRACTOR SHALL COORDINATE WITH GENERAL CONTRACTOR FOR LIGHTNING PROTECTION SYSTEM INSTALLATION.
17. CONNECTION TO GROUND ROD OR GROUND LOOP CONDUCTOR SHALL BE MADE AT A POINT NOT LESS THAN 18" BELOW GRADE AND 2'-0" AWAY FROM THE FOUNDATION WALL. GROUND RODS SHALL NOT BE LESS THAN 10' LONG AND 2'-0" AWAY FROM THE FOUNDATION WALL.
18. GROUNDED METAL BODIES LOCATED ABOUT THE STRUCTURE SUCH AS: SOIL PIPE VENTS, ROOF DRAINS, EXHAUST FANS, AIR HANDLER UNITS, ANY MISCELLANEOUS EQUIPMENT WITH ELECTRICAL SERVICES, ETC SHALL BE INTERCONNECTED TO THE LIGHTNING CONDUCTOR SYSTEM, IF WITHIN THE "BONDING DISTANCE" ESTABLISHED BY NFPA #780.
19. METALLIC BODIES OF INDUCTANCE SITUATED WITHIN 6'-0" OF A LIGHTNING CONDUCTOR OR ANOTHER BONDED METAL BODY SHALL BE INTERCONNECTED TO THE LIGHTNING CONDUCTOR SYSTEM, UNLESS INHERENTLY GROUNDED
20. BOND ALL METALLIC PIPES INCLUDING WATER,FIRE,GAS,SEWER,STORM,ETC WHICH ENTER THE STRUCTURE WITHIN 6'-0" OF GRADE, TO THE NEAREST DOWNLEAD,GROUND ROD OR GROUND LOOP.
21. THE LIGHTNING PROTECTION SYSTEM SHALL BE INSTALLED IN A NEAT AND INCONSPICUOUS MANNER SO THAT ALL COMPONENTS WILL BLEND WITH THE APPEARANCE OF THE BUILDING.
22. INSTALLATION:
    - 22.1.1. ALL MOUNTING & PENETRATION OF ROOF SURFACE SHALL BE COORDINATED WITH ROOFING CONTRACTOR TO ASSURE MAXIMUM ROOFING GUARANTEE.
    - 22.1.2. ALL THROUGH-ROOF PENETRATION FLASHINGS TO BE FURNISHED, SEALED AND GUARANTEED BY ROOFING CONTRACTOR
    - 22.1.3. ALL CONDUITS USED TO ROUTE LIGHTNING PROTECTION CABLES SHALL BE 1" MINIMUM SCHEDULE 40 PVC.
23. TELEPHONE AND/OR ELECTRICAL SERVICE ENTRANCE GROUNDS SHALL BE INTERCONNECTED LIGHTNING PROTECTION GROUND BAR.
24. CONDUCTORS SHALL INTERCONNECT ALL AIR TERMINALS AND SHALL FORM A TWO-WAY PATH FROM EACH AIR TERMINAL HORIZONTALLY OR DOWNWARD TO CONNECTIONS WITH GROUND TERMINALS.
25. BARE COPPER LIGHTNING PROTECTION MATERIALS SHALL NOT BE INSTALLED ON ALUMINUM ROOF OR SIDING OR OTHER ALUMINUM SURFACES AND VICE VERSA, ALUMINUM LIGHTING PROTECTION MATERIALS SHALL NOT BE INSTALLED ON COPPER ROOFING OR COPPER SIDING OR OTHER COPPER SURFACES.
26. ALL ADHESIVE TYPE FITTINGS SHALL BE SET IN PLACE WITH AN APPLICATION OF CHEM LINK M-1 STRUCTURAL SEALANT BEFORE ROOF GRAVEL IS APPLIED.
27. SEAL ENDS OF CONDUIT MOISTURE TIGHT WITH PERMANENT DUCT SEALING COMPOUND.
28. ALL REINFORCING, STRUCTURAL, FRAMING AND MISCELLANEOUS STEEL SHALL BE MADE ELECTRICALLY CONTINUOUS THROUGHOUT CONSTRUCTION BY WELDING, CLIPPING, BOLTING OR OTHER APPROVED METHODS.
29. THE DESIGN LAYOUT AND INSTALLATION DETAILS SHOWN HEREON SHALL MEET THE REQUIREMENTS OF UNDERWRITERS' LABORATORIES STANDARD 96A FOR MASTER LABELED LIGHTNING PROTECTION SYSTEMS. THE ACTUAL MASTER LABEL WILL BE DELIVERED UPON COMPLETION OF INSTALLATION.
30. THE LIGHTNING PROTECTION INSTALLATION SHALL COMPLY IN ALL RESPECTS TO LIGHTNING PROTECTION INSTITUTE STANDARD 175. THE INSTALLATION SHALL BE MADE BY OR UNDER THE SUPERVISION OF AN L.P.I. CERTIFIED MASTER INSTALLER. THE COMPLETED INSTALLATION WILL RECEIVE SYSTEM CERTIFICATION SUBMITTAL FORM LPI 176.

REQUEST FOR PROPOSAL

NO.	DATE	ISSUED FOR	BY
1	07/24/15	REQUEST FOR PROPOSAL	G.A.B.

DESIGNED J.M.B.
DRAWN G.P.B.
CHECKED J.C.B.
PROJ. ENGR. J.C.B.

JOHN C. BURKE P.E.
No. 17301

HAZEN AND SAWYER
Environmental Engineers & Scientists
4000 Hollywood Boulevard, Suite 750N
Hollywood, Florida 33021
Certificate of Authorization Number: 2771

SCALE NTS
CLIENTS PROJECT: –
ENGINEERS PROJECT: 44238-004
CAD REFERENCE: 44238-004BP3-E65

NORTH MIAMI FLORIDA
CITY OF NORTH MIAMI
PUBLIC WORKS UTILITIES

WINSON WATER TREATMENT PLANT
RELIABILITY IMPROVEMENTS – VOLUME C: WTP REHAB

ELECTRICAL DETAILS
SHEET 3

DATE: JULY 2015
SHEET: 304 OF 335
DRAWING: E-65

PLOT DATE: 7/24/2015 4:41 PM BY: TBOCAS
XREFs= ..\Tblock\44238-004-BP3-TB
File = H:\44238-004\Drawings\design build package\volume c - wtp rehab\Bid Package 3 - WTP Rehab\Electrical\44238-004BP3-E65 Saved by HScalll Save date = 6/6/2014 5:28 PM

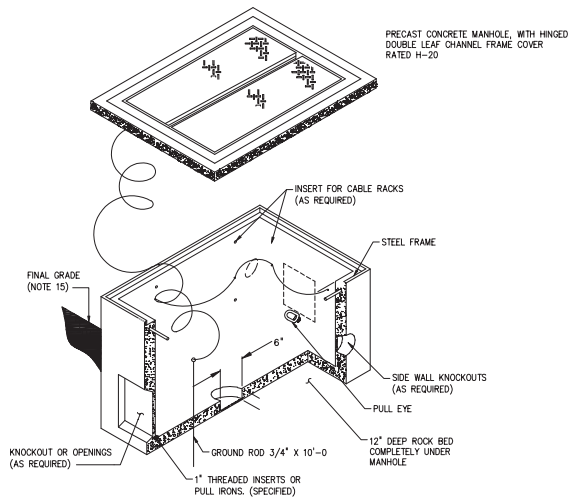

ELECTRIC MANHOLE SCHEDULE

MANHOLE NO.	EXTERIOR		INTERIOR			HATCH				
	LENGTH	WIDTH	LENGTH	WIDTH	DEPTH	TYPE	LENGTH	WIDTH	SERVICE	CUSTOM LETTERING
FPL	7'-4"	7'-4"	6'-0"	6'-0"	NOTE 2	FPL REQ	4'-8"	4'-8"	H-20 PARKING LOT	"FPL"
E1	7'-4"	7'-4"	6'-0"	6'-0"	NOTE 2	DUAL LEAF	4'-8"	4'-8"	H-20 PARKING LOT	"ELECTRIC"
C1	7'-4"	7'-4"	6'-0"	6'-0"	NOTE 2	DUAL LEAF	4'-8"	4'-8"	H-20 PARKING LOT	"SIGNAL"
E2	7'-4"	7'-4"	6'-0"	6'-0"	NOTE 2	DUAL LEAF	4'-8"	4'-8"	H-20 PARKING LOT	"ELECTRIC"
C2	7'-4"	7'-4"	6'-0"	6'-0"	NOTE 2	DUAL LEAF	4'-8"	4'-8"	H-20 PARKING LOT	"SIGNAL"
E3	7'-4"	7'-4"	6'-0"	6'-0"	NOTE 2	DUAL LEAF	4'-8"	4'-8"	H-20 PARKING LOT	"ELECTRIC"
C3	7'-4"	7'-4"	6'-0"	6'-0"	NOTE 2	DUAL LEAF	4'-8"	4'-8"	H-20 PARKING LOT	"SIGNAL"
E4	7'-4"	7'-4"	6'-0"	6'-0"	NOTE 2	DUAL LEAF	4'-8"	4'-8"	H-20 PARKING LOT	"ELECTRIC"

ELECTRIC MANHOLE DETAIL

DETAIL 25
NTS –

NOTES FOR ALL MANHOLES:

1. ALL DIMENSIONS ARE APPROXIMATE.
2. FINAL DEPTH OF ELECTRIC MANHOLES SHALL BE FIELD DETERMINED BY CONTRACTOR TO AVOID CONFLICTS WITH EXISTING AND PROPOSED IMPROVEMENTS.
3. CONTRACTOR SHALL PROVIDE REQUIRED END BELL LOCATIONS TO MANHOLE MANUFACTURER BEFORE MANUFACTURING.
4. ALL MANHOLES SHALL BE H-20-44 TRAFFIC RATED.
5. THE HEIGHT OF CONDUIT ENTRANCES SHALL BE COORDINATED BY THE CONTRACTOR TO ACCOMMODATE OTHER UTILITIES IN THE AREA. SEE CIVIL AND ELECTRICAL SITE PLANS FOR ELEVATIONS REQUIREMENTS.
6. CONTRACTOR SHALL COORDINATE CONDUIT ENTRY REQUIREMENTS WITH SITE PLAN, PRIOR TO ORDERING MANHOLES.
7. CABLE RACK, JOSLYN J-5126 OR EQUAL.
   CABLE HOOKS, JOSLYN J-5131A OR EQUAL.
   CABLE RACK INSULATORS, JOSLYN J-5120.
8. PULLING-IN-IRONS INSTALL OPPOSITE CONDUIT ENTRANCE. POSITION BELOW LEVEL OF CONDUIT ENTRANCE. HUBBART & CO. CATALOG 9119 OR EQUAL.
9. TERMINATE ALL DUCTS IN MANHOLE WITH END BELLS.
10. MANHOLE COVERS SHALL BE MARKED "ELECTRICAL POWER" OR "ELECTRICAL INSTRUMENTATION" BY THE MANUFACTURER, WITH RAISED LETTERS. THE CONTRACTOR SHALL STAMP IN THE MANHOLE COVERS THE IDENTIFICATION NUMBER OF THE MANHOLE, LETTERS AND NUMBERS SHALL BE 2" HIGH. LETTERS AND NUMBERS TO BE RAISED AND 2" HIGH. SUBMIT ONE SAMPLE NAMEPLATE FOR ENGINEER'S APPROVAL PRIOR TO INSTALLATION.
11. GROUND ROD, 3/4"X20'-0, COPPER CLAD.
12. BOND ALL METALLIC PARTS TO GROUNDING SYSTEM.
13. PRECAST CONCRETE MANHOLE WITH COVER, U.S. PRECAST CORP. OR EQUAL.
14. COVER AND STEEL FRAME SHALL BE GROUNDED.
15. MANHOLES IN PAVED AREAS SHALL BE SET WITH TOP 1-INCH HIGHER THAN FINAL ASPHALT (FEATHER ASPHALT TO MATCH TOP OF MANHOLE). MANHOLES IN SODED AREAS SHALL BE SET 6-INCHES HIGHER THAN FINAL GRADE.

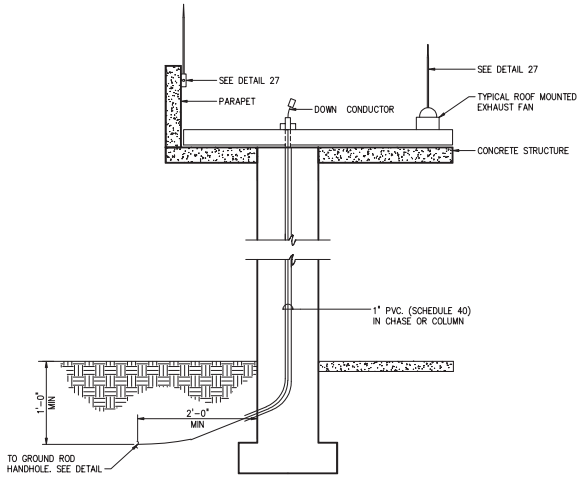

ROOF TO GROUND DOWNLEAD ROUTING

DETAIL 26
NTS –

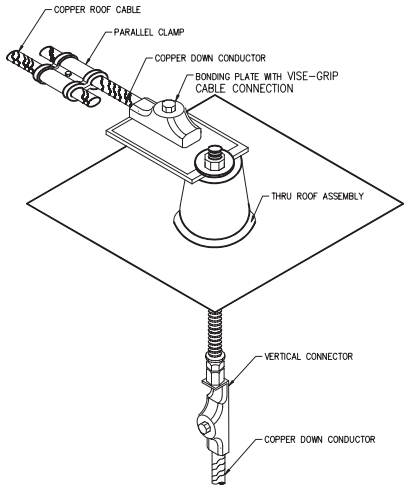

LIGHTNING DOWNLEAD THROUGH ROOF

DETAIL 27
NTS –

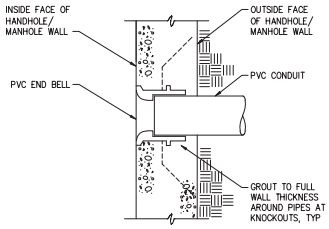

MANHOLE CONDUIT ENTRANCE

DETAIL 28
NTS –

NO.	DATE	ISSUED FOR	BY
1	07/24/15	REQUEST FOR PROPOSAL	G.A.B.

DESIGNED J.M.B.
DRAWN G.P.B.
CHECKED J.C.B.
PROJ. ENGR. J.C.B.

JOHN C. BURKE P.E.
No. 17301

HAZEN AND SAWYER
Environmental Engineers & Scientists
4000 Hollywood Boulevard, Suite 750N
Hollywood, Florida 33021
Certificate of Authorization Number: 2771

SCALE NTS

CLIENTS PROJECT: –
ENGINEERS PROJECT: 44238-004
CAD REFERENCE: 44238-004BP3-E66

NORTH MIAMI FLORIDA
CITY OF NORTH MIAMI
PUBLIC WORKS UTILITIES

WINSON WATER TREATMENT PLANT
RELIABILITY IMPROVEMENTS – VOLUME C: WTP REHAB

ELECTRICAL DETAILS
SHEET 4

DATE: JULY 2015
SHEET: 305 OF 335
DRAWING: E-66

REQUEST FOR PROPOSAL

PLOT DATE: 7/24/2015 4:41 PM BY: TBOCAS
XREFs= ..\Tblock\44238-004-BP3-TB
File = H:\44238-004\Drawings\design build package\volume c - wtp rehab\Bid Package 3 - WTP Rehab\Electrical\44238-004BP3-E66 Saved by HScalll Save date = 6/6/2014 5:28 PM

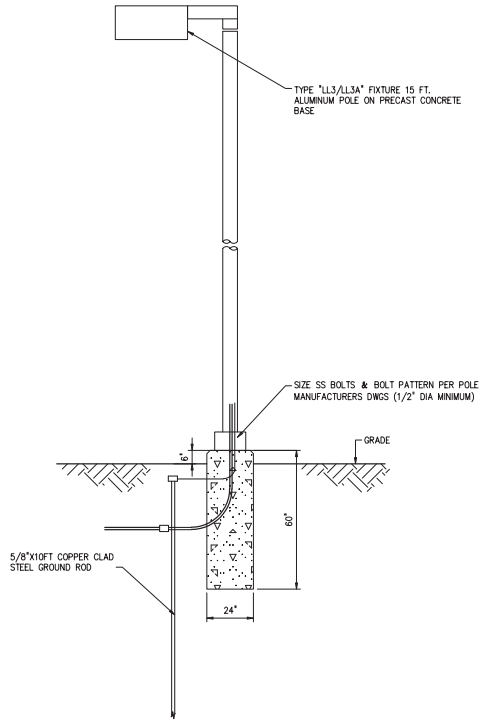

WINDLOADING NOTE:

1. ALL POLE INSTALLATIONS SHALL BE SUITABLE FOR 144 MPH WIND WITH APPROPRIATE GUST FACTOR PER APPLICABLE ZONE OF INSTALLATION AS DEFINED IN THE FLORIDA BUILDING CODE

SITE LIGHTPOLE AND BASE

DETAIL 29
NTS –

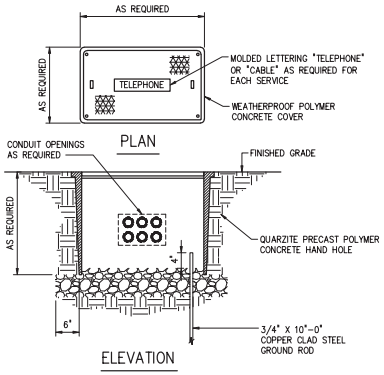

NOTES:

1. ALL HANDHOLES SHALL BE PROVIDED WITH AN OPEN BOTTOM, UNLESS OTHERWISE INDICATED ON PLANS.
2. HANDHOLES 12" X 24" AND LARGER SHALL HAVE FACTORY-INSTALLED INSERTS FOR CABLE RACKS AND PULLING-IN IRONS.

TYPICAL HAND HOLE DETAIL

DETAIL 30
NTS E-04

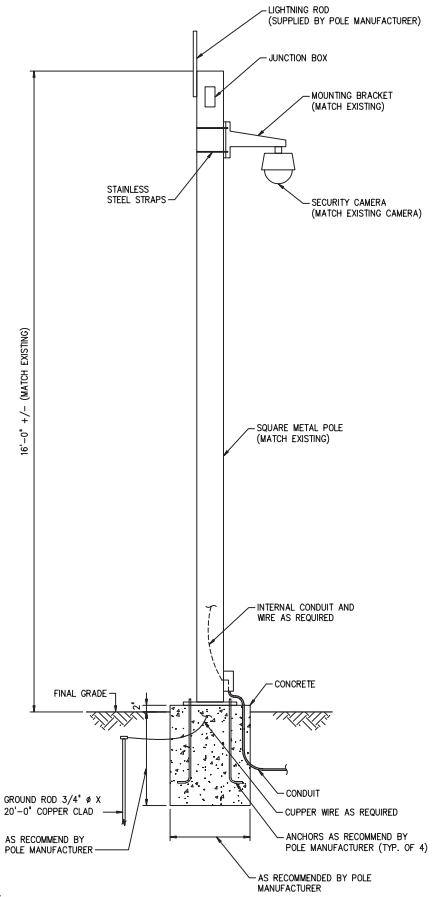

GENERAL NOTES:

1. FURNISH AND INSTALL POLES WITH ALL NEEDED INTERNAL WIRING, TRANSFORMERS, SURGE PROTECTION, TERMINAL STRIPS, ETC. AS NECESSARY FOR A COMPLETE AND OPERABLE SYSTEM.
2. ALL POLES SHALL BE SUITABLE FOR 144 MPH NOMINAL WIND SPEED WITH APPROPRIATE GUST FACTOR PER APPLICABLE ZONE OF INSTALLATION AS DEFINED IN THE FLORIDA BUILDING CODE.

DETAIL 31
NTS –

NO.	DATE	ISSUED FOR	BY
1	07/24/15	REQUEST FOR PROPOSAL	G.A.B.

DESIGNED J.M.B.
DRAWN G.P.B.
CHECKED J.C.B.
PROJ. ENGR. J.C.B.

JOHN C. BURKE P.E.
No. 17301

HAZEN AND SAWYER
Environmental Engineers & Scientists
4000 Hollywood Boulevard, Suite 750N
Hollywood, Florida 33021
Certificate of Authorization Number: 2771

SCALE NTS

CLIENTS PROJECT: –
ENGINEERS PROJECT: 44238-004
CAD REFERENCE: 44238-004BP3-E67

NORTH MIAMI FLORIDA
CITY OF NORTH MIAMI
PUBLIC WORKS UTILITIES

WINSON WATER TREATMENT PLANT
RELIABILITY IMPROVEMENTS – VOLUME C: WTP REHAB

ELECTRICAL DETAILS
SHEET 5

DATE: JULY 2015
SHEET: 306 OF 335
DRAWING: E-67

REQUEST FOR PROPOSAL

PLOT DATE: 7/24/2015 4:41 PM BY: TBOCAS
XREFs= ..\Tblock\44238-004-BP3-TB
File = H:\44238-004\Drawings\design build package\volume c - wtp rehab\Bid Package 3 - WTP Rehab\Electrical\44238-004BP3-E67 Saved by randersen Save date = 6/9/2014 12:44 PM

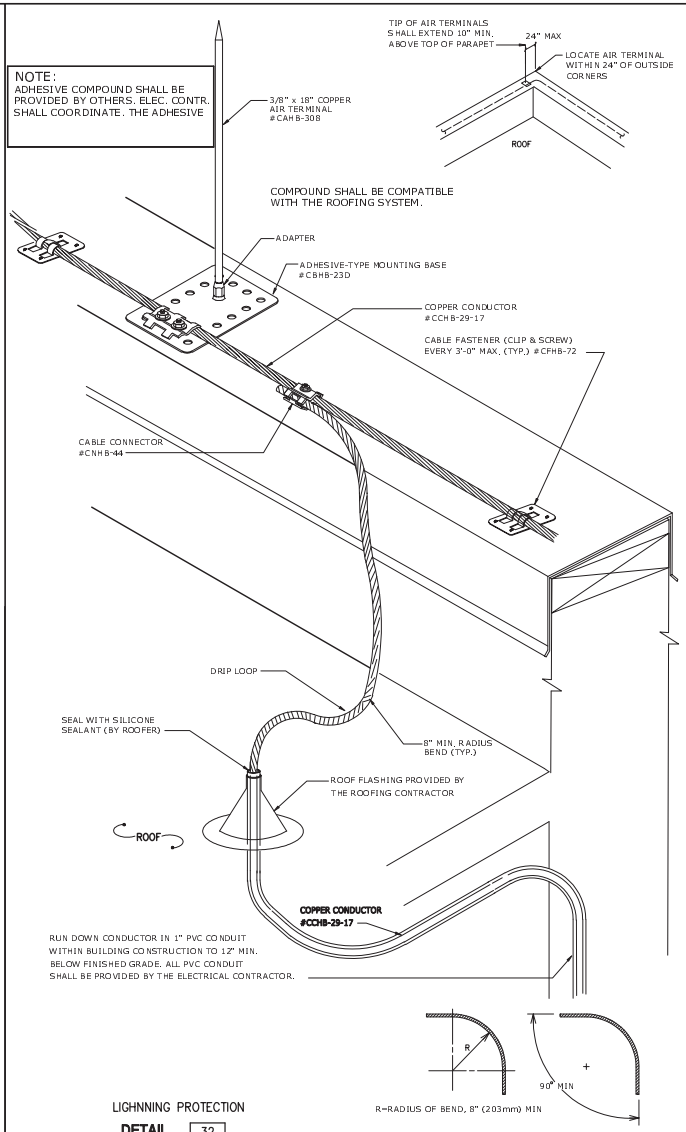

LIGHNNING PROTECTION

DETAIL 32
NTS –

LP CONDUCTOR SHALL REMAIN IN A HORIZONTAL OR DOWNWARD PATH AVOIDING "U" & "V" POCKETS (DOWN & UP). NO BEND OF A CONDUCTOR SHALL FORM AN INCLUDED ANGLE OF LESS THAN 90° OR HAVE A RADIUS OF BEND LESS THAN 8".

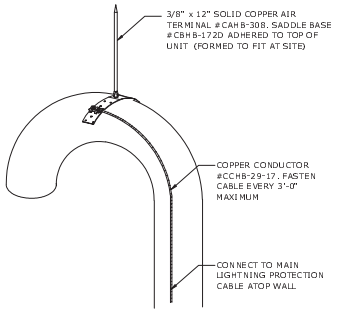

NOTE:
LIGHTNING PROTECTION COMPONENT MATERIALS SHALL BE GALVANICALLY COMPATIBLE WITH METAL BODIES. THE ELECTRICAL ENGINEER AND INSTALLING CONTRACTOR MUST VERIFY.

AIR TERMINAL AT GOOSENECK

DETAIL 33
NTS –

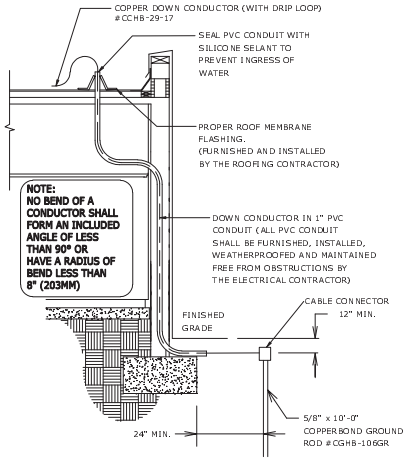

LIGHTNING PROTECTION DOWN CONDUCTOR AND GROUNDING

DETAIL 34
NTS –

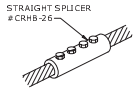

STRAIGHT SPLICER

DETAIL 35
NTS –

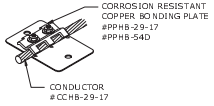

BONDING PLATE

DETAIL 36
NTS –

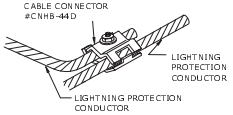

CABLE CONNECTOR

DETAIL 37
NTS –

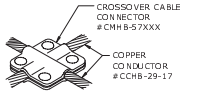

CROSSOVER CABLE CONNECTOR

DETAIL 38
NTS –

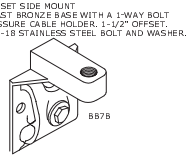

OFFSET SIDE MOUNT BASE

DETAIL 39
NTS –

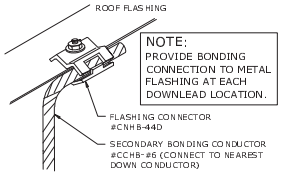

FLASHING CONNECTOR

DETAIL 40
NTS –

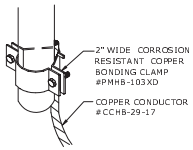

PIPE CLAMP – (RAILINGS ATTENNAS ETC)

DETAIL 41
NTS –

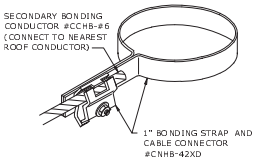

BONDING STRAP AT VENT PIPES

DETAIL 42
NTS –

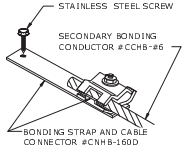

BONDING LUG (ROOF DRAINS)

DETAIL 43
NTS –

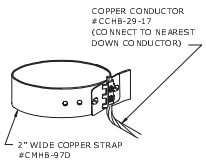

WATERLINE BONDING STRAP

DETAIL 44
NTS –

NO.	DATE	ISSUED FOR	BY
1	07/24/15	REQUEST FOR PROPOSAL	G.A.B.

DESIGNED J.M.B.
DRAWN G.P.B.
CHECKED J.C.B.
PROJ. ENGR. J.C.B.

JOHN C. BURKE P.E.
No. 17301

HAZEN AND SAWYER
Environmental Engineers & Scientists
4000 Hollywood Boulevard, Suite 750N
Hollywood, Florida 33021
Certificate of Authorization Number: 2771

SCALE NTS

CLIENTS PROJECT: –
ENGINEERS PROJECT: 44238-004
CAD REFERENCE: 44238-004BP3-E68

NORTH MIAMI FLORIDA
CITY OF NORTH MIAMI
PUBLIC WORKS UTILITIES

WINSON WATER TREATMENT PLANT
RELIABILITY IMPROVEMENTS – VOLUME C: WTP REHAB

ELECTRICAL DETAILS
SHEET 6

DATE: JULY 2015
SHEET: 307 OF 335
DRAWING: E-68

REQUEST FOR PROPOSAL

PLOT DATE: 7/24/2015 4:41 PM BY: TBLOCAS

XREFs= ..\Tblock\44238-004-BP3-TB

File = H:\44238-004\Drawings\design build package\volume c - wtp rehab\Bid Package 3 - WTP Rehab\Electrical\44238-004BP3-E68 Saved by jbroad Save date = 12/26/2013 4:54 PM

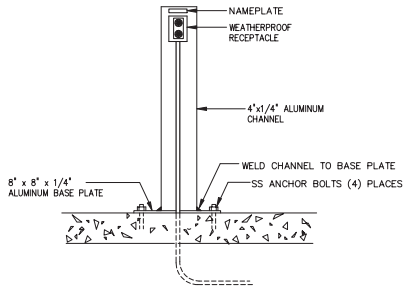

SWITCH PEDESTAL

DETAIL 45
NTS –

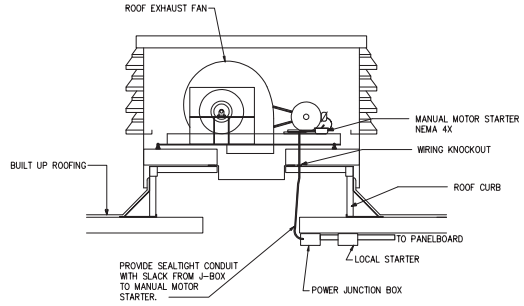

ROOF EXHAUST FAN CHEM BLDG

DETAIL 46
NTS –

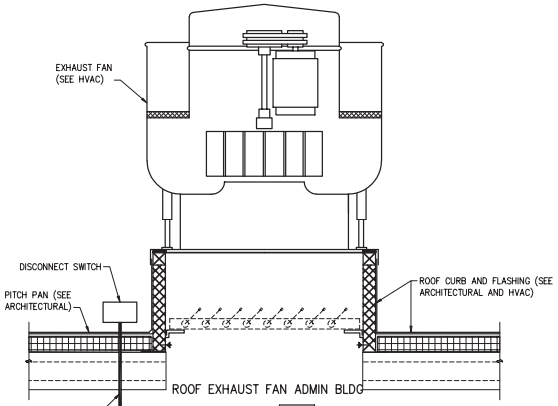

ROOF EXHAUST FAN ADMIN BLDG

DETAIL 47
NTS –

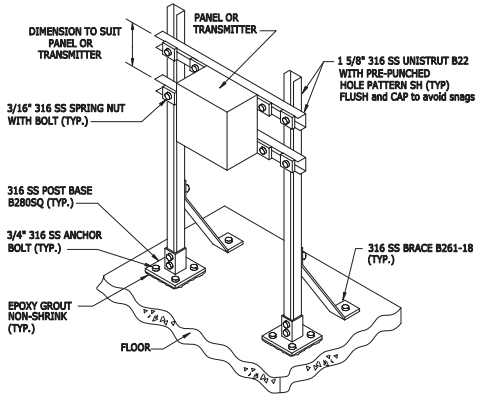

TRANSMITTER FLOOR STAND

DETAIL 48
NTS –

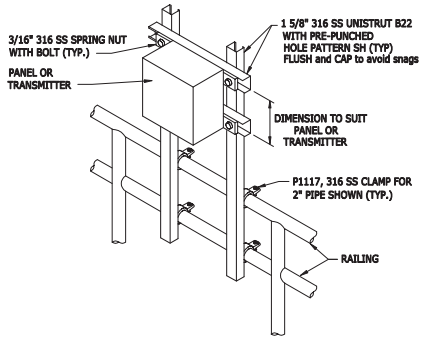

TRANSMITTER RAIL MOUNT

DETAIL 49
NTS –

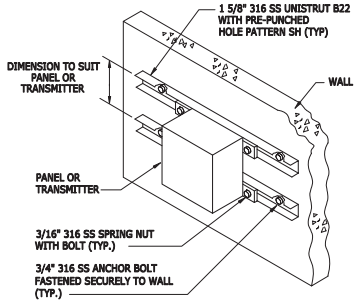

TRANSMITTER WALL MOUNT

DETAIL 50
NTS –

NO.	DATE	ISSUED FOR	BY
1	07/24/15	REQUEST FOR PROPOSAL	G.A.B.

DESIGNED J.M.B.
DRAWN G.P.B.
CHECKED J.C.B.
PROJ. ENGR. J.C.B.

JOHN C. BURKE P.E.
No. 17301

HAZEN AND SAWYER
Environmental Engineers & Scientists
4000 Hollywood Boulevard, Suite 750N
Hollywood, Florida 33021
Certificate of Authorization Number: 2771

SCALE NTS

CLIENTS PROJECT: –
ENGINEERS PROJECT: 44238-004
CAD REFERENCE: 44238-004BP3-E69

NORTH MIAMI FLORIDA
CITY OF NORTH MIAMI
PUBLIC WORKS UTILITIES

WINSON WATER TREATMENT PLANT
RELIABILITY IMPROVEMENTS – VOLUME C: WTP REHAB

ELECTRICAL DETAILS
SHEET 7

DATE: JULY 2015
SHEET: 308 OF 335
DRAWING: E-69

REQUEST FOR PROPOSAL

PLOT DATE: 7/24/2015 4:41 PM BY: TBOCAS
XREFs= ..\Tblock\44238-004-BP3-TB
File = H:\44238-004\Drawings\design build package\volume c - wtp rehab\Bid Package 3 - WTP Rehab\Electrical\44238-004BP3-E69 Saved by jbroad Save date = 12/26/2013 4:57 PM

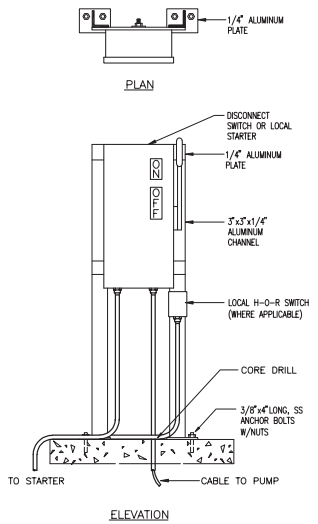

DISCONNECT SWITCH PEDESTAL WITH H-O-R- SWITCH

DETAIL 51
NTS –

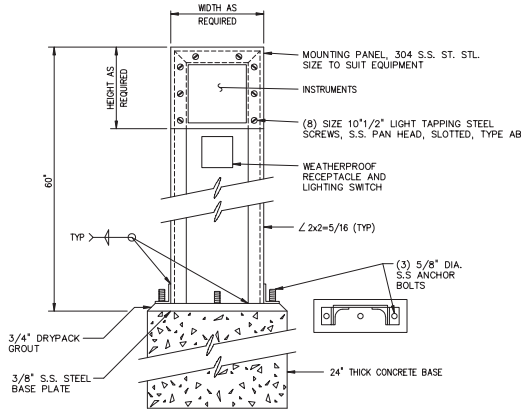

LOCAL PANEL SUPPORT

DETAIL 52
NTS –

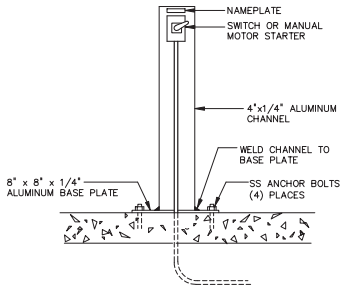

SWITCH PEDESTAL

DETAIL 53
NTS –

NO.	DATE	ISSUED FOR	BY
1	07/24/15	REQUEST FOR PROPOSAL	G.A.B.

DESIGNED J.M.B.
DRAWN G.P.B.
CHECKED J.C.B.
PROJ. ENGR. J.C.B.

JOHN C. BURKE P.E.
No. 17301

HAZEN AND SAWYER
Environmental Engineers & Scientists
4000 Hollywood Boulevard, Suite 750N
Hollywood, Florida 33021
Certificate of Authorization Number: 2771

SCALE NTS

CLIENTS PROJECT: –
ENGINEERS PROJECT: 44238-004
CAD REFERENCE: 44238-004BP3-E70

NORTH MIAMI FLORIDA
CITY OF NORTH MIAMI
PUBLIC WORKS UTILITIES

WINSON WATER TREATMENT PLANT
RELIABILITY IMPROVEMENTS – VOLUME C: WTP REHAB

ELECTRICAL DETAILS
SHEET 8

DATE: JULY 2015
SHEET: 309 OF 335
DRAWING: E-70

REQUEST FOR PROPOSAL

PLOT DATE: 7/24/2015 4:41 PM BY: TBOCAS

XREFs= ..\Tblock\44238-004-BP3-TB

File = H:\44238-004\Drawings\design build package\volume c - wtp rehab\Bid Package 3 - WTP Rehab\Electrical\44238-004BP3-E70 Saved by jbroad Save date = 12/26/2013 4:09 PM

SYMBOLS

- T/S — THERMOSTAT/SENSOR
- GATE VALVE
- CHECK VALVE
- AUTOMATIC CONTROL VALVE 2-WAY
- AUTOMATIC CONTROL VALVE 3-WAY
- S — SOLENOID OPERATED VALVE
- GLOBE VALVE
- BALL VALVE
- BUTTERFLY VALVE
- COMBINATION BALANCING COCK & FLOW SENSOR
- TRIPLE DUTY VALVE (STRAIGHT, ANGLE PATTERN)
- PIPING ELBOW, 90 TURNED DOWN
- PIPING ELBOW, 90 TURNED UP
- PIPING TEE, OUTLET TURNED DOWN
- PIPING TEE, OUTLET TURNED UP
- PRESSURE GAGE WITH SHUTOFF COCK (BALL VALVE)
- THERMOMETER
- SUPPLY AIR DUCT SECTION-UP
- SUPPLY AIR DUCT SECTION-DOWN
- RETURN AIR DUCT SECTION-UP
- RETURN AIR DUCT SECTION-DOWN
- EXHAUST AIR DUCT SECTION-UP
- EXHAUST AIR DUCT SECTION-DOWN
- M — MOTORIZED DAMPER
- ② FD — FIRE DAMPER WITH ACCESS DOOR
  - # HOUR RATED WALL (2 HR. SHOWN)
- ② FSD — FIRE/SMOKE DAMPER WITH ACCESS DOOR
  - # HOUR RATED WALL (2 HR. SHOWN)
- VD — MANUAL VOLUME DAMPER
- BD — BACKDRAFT DAMPER
- SLOPE — CHANGE OF ELEVATION: RISE (R) OR DROP (D)

LINETYPES

RL	REFRIGERANT LIQUID		
RS	REFRIGERANT SUCTION	FOS	FUEL OIL SUPPLY
HWS	HOT WATER SUPPLY LINE	FOR	FUEL OIL RETURN
HWR	HOT WATER RETURN LINE	FOG	FUEL OIL GAUGE
V	VENT	FOV	FUEL OIL VENT
CW	COLD WATER	NG	NATURAL GAS
HPS	HIGH PRESSURE STEAM	CWS	CHILLED WATER SUPPLY
LPS	LOW PRESSURE STEAM	CWR	CHILLED WATER RETURN
CR	CONDENSATE RETURN	CF	CHEMICAL FEED
MU	MAKE UP WATER	C	CONDENSER WATER SUPPLY
D	DRAIN	CR	CONDENSER WATER RETURN

ABBREVIATIONS

AC	AIR CONDITIONING, AIR CONDITIONING UNIT
ACCU	AIR COOLED CONDENSING UNIT
AD	ACCESS DOOR
AF/BI FAN	AIRFOIL/BACKWARD INCLINED FAN
AFF	ABOVE FINISHED FLOOR
AFUE	ANNUAL FUEL UTILIZATION EFFICIENCY
AHU	AIR HANDLING UNIT
APD	AIR PRESSURE DROP
ATC	AUTOMATIC TEMPERATURE CONTROL
B	BOILER
BD	GRAVITY BACKDRAFT DAMPER
BHP	BRAKE HORSEPOWER
BOD	BOTTOM OF DUCT
BOR	BOTTOM OF REGISTER
BOU	BOTTOM OF UNIT
CB	CIRCUIT BREAKER
CFM	CUBIC FEET OF STANDARD AIR PER MINUTE
CH	CABINET UNIT HEATER
CWP	CHILLED WATER PUMP
CWS	CHILLED WATER SUPPLY
CWR	CHILLED WATER RETURN
DB	DRY BULB
DEC	DIRECT EVAPORATIVE COOLING
DIA, ø	DIAMETER
DM	DAMPER MOTOR
DWP	DOMESTIC WATER PUMP
EA	EXHAUST AIR
EAT	ENTERING AIR TEMPERATURE
EAV	EXHAUST AIR VENT OR EXHAUST AIR VALVE
EC	EVAPORATIVE COOLING
EDH	ELECTRIC DUCT HEATER
EF	EXHAUST FAN
EL/ELEV	ELEVATION
ES	ENTHALPY SENSOR
ESP	EXTERNAL STATIC PRESSURE
ET	EXPANSION TANK
EWT	ENTERING WATER TEMPERATURE
FA	FREE AREA
FC	FLEXIBLE CONNECTOR OR FAN COIL
FD	FIRE DAMPER WITH ACCESS DOOR
FLA	FULL LOAD AMPS
FO	FUEL OIL
FOP	FUEL OIL PUMP
FOR	FUEL OIL RETURN
FOS	FUEL OIL SUPPLY
FOV	FUEL OIL VENT
FPM	FEET PER MINUTE
FTR	FINNED TUBE RADIATION
GC	GENERAL CONTRACTOR
GPM	GALLONS PER MINUTE
HG	HOT GAS
HGP	HOT WATER/GLYCOL PUMP
HMCS	HVAC MONITOING AND CONTROLS SYSTEMS
HP	HORSEPOWER OR HEAT PUMP
HV	HEATING AND VENTILATING UNIT
HWS	HOT WATER SUPPLY
HWR	HOT WATER RETURN
IAV	INTAKE AIR VENT
IDEC	INDIRECT EVAPORATIVE COOLING
IN. WG	INCHES OF WATER GAGE
KW	KILOWATT HOUR
L	LOUVER
LAT	LEAVING AIR TEMPERATURE
LDA	LINEAR DIFFUSER (TYPE A)
LF	LINEAR FEET
LR	LINEAR RETURN
LWT	LEAVING WATER TEMPERATURE
MAU	MAKEUP AIR UNIT
MBH	1,000 BTU PER HOUR
MCA	MINIMUM CIRCUIT AMPACITY
MD	MOTORIZED DAMPER
MTD	MOUNTED
NC	NORMALLY CLOSED, NOISE CRITERIA
NK	NECK
NO	NORMALLY OPEN
NTS	NOT TO SCALE
NPWS	NON POTABLE WATER SUPPLY
NPWR	NO POTABLE WATER RETURN
OA	OUTSIDE AIR
OAI	OUTSIDE AIR INTAKE
ORP	OXYGEN REDUCTION POTENTIAL
P	PUMP
PA	PRESSURIZATION AIR
PD	PRESSURE DROP
PF	PROPELLER FAN
PH, ø	PHASE
PS	PRESSURE SENSOR
PW	POTABLE WATER
RA	RETURN AIR
RH	RELATIVE HUMIDITY
RO	ROOF OPENING
RL	REFRIGERANT LIQUID
RLA	RATED LINE AMPS
RS	REFRIGERANT SUCTION
RPM	REVOLUTIONS PER MINUTE
SA	SUPPLY AIR
SD	SMOKE DETECTOR
SF	SUPPLY AIR FAN
SH	SENSIBLE HEAT
SP	STATIC PRESSURE
SPEC	SPECIFICATION
SS	STAINLESS STEEL
SV	SOLENOID VALVE
SWP	SOLAR WATER PUMP
TEMP	TEMPERATURE
TF	TRANSFER FAN
TH	TOTAL HEAT
TOD	TOP OF DUCT
TOU	TOP OF UNIT
TOR	TOP OF REGISTER
TSP	TOTAL STATIC PRESSURE
TS	TEMPERATURE SENSOR
TYP	TYPICAL
UH	UNIT HEATER
UOR	UNDERSIDE OF ROOF
VAV	VARIABLE AIR VOLUME
V	VOLTS
VEL	VELOCITY
VD	VOLUME DAMPER
VH	HEATING CONTROL VALVE
VC	COOLING CONTROL VALVE
WPD	WATER PRESSURE DROP
W/	WITH
WB	WET BULB
WC	WATER COLUMN

(•)(•)(•)-AHU-1
- QUANTITY DESIGNATION
- EQUIPMENT DESIGNATION
- BUILDING DESIGNATION WHEN APPLICABLE

SR1 — SUPPLY AIR REGISTER
- SUPPLY AIR REGISTER (TYPE 1)
- SUPPLY AIR REGISTER (TYPE 2), ETC.

RR1 — RETURN AIR REGISTER (TYPE 1)

ER1 — EXHAUST AIR REGISTER (TYPE 1)

20X10 SR1 — 20X10 NECK SIZE, SUPPLY REGISTER (TYPE 1)
1000 CFM — 1000 CUBIC FEET PER MINUTE AIRFLOW RATE

24X24 CDA — CEILING DIFFUSER (TYPE A)
- LOUVERED FACE SIZE
- 8-300
  - CUBIC FEET PER MINUTE AIRFLOW RATE SETTING (MAX)
  - NECK DIAMETER

SHADED SECTION OF CEILING DIFFUSER INDICATES INACTIVE PANELS

2 — DOOR LOUVER NUMBER INDICATES SIZE SQ FT

GENERAL NOTES

1. THE SYMBOLS AND ABBREVIATIONS LIST ON THIS SHEET IS A COMPREHENSIVE STANDARD GUIDE INTENDED FOR GENERAL USE ON ALL PROJECTS. THEREFORE NOT ALL THE SYMBOLS AND ABBREVIATIONS CONTAINED IN THIS LIST ARE NECESSARILY USED ON THIS PARTICULAR PROJECT AND SHOULD BE USED FOR CLARIFICATION ONLY.
2. ALL DUCT DIMENSIONS ARE CLEAR DIMENSIONS TO INSIDE OF DUCT. DIMENSIONS TO DUCTS FROM FLOOR OR WALL SHALL BE TO THE OUTSIDE OF DUCT/INSULATION.
3. EQUIPMENT SIZES AND LOCATIONS ARE APPROXIMATE. ACTUAL DIMENSIONS TO BE DETERMINED BY EQUIPMENT FURNISHED. COORDINATE HVAC WORK WITH THE WORK OF ALL OTHER TRADES.
4. FINAL OPENING DIMENSIONS, CONCRETE PAD SIZES, AND LOCATIONS MUST BE COORDINATED DURING CONSTRUCTION WITH APPROVED EQUIPMENT.
5. FINAL SIZES OF FLOOR OPENINGS, DUCT PLENUMS, TRANSITIONS AND PIPING CONNECTIONS TO ALL EQUIPMENT SHALL BE DETERMINED BY EQUIPMENT FURNISHED.
6. ALL PIPING AND DUCTS IN FINISHED ROOMS SHALL BE CONCEALED IN FURRED CHASES OR SUSPENDED CEILINGS. ACCESS DOORS SHALL BE INSTALLED FOR ANY CONCEALED DEVICE REQUIRING ADJUSTMENT.
7. THE DRAWINGS ARE SCHEMATIC IN NATURE AND SHOW INTENDED GENERAL LOCATION OF HVAC EQUIPMENT AND SYSTEMS. NOT ALL OFFSETS AND REQUIRED FITTINGS FOR ACTUAL FIELD INSTALLATION ARE INTENDED TO BE SHOWN FOR INSTALLATION OF SYSTEMS IN THE SPACE AVAILABLE IN CONSIDERATION OF WORK OF OTHER TRADES AND FIELD CONDITIONS. CONTRACTOR SHALL PROVIDE ADDITIONAL OFFSETS IN DUCTWORK AND PIPING AS REQUIRED TO AVOID SUCH INTERFERENCES OR FIELD CONDITIONS AT NO ADDITIONAL COST TO THE ORIGINAL CONTRACT AMOUNT.
8. FIRST FIGURE OF DUCT SIZE INDICATES DIMENSION OF FACE SHOWN OR INDICATED OR WIDTH OF DUCT IN PLAN VIEW.
9. FLEXIBLE DUCT SHALL NOT EXCEED 6 FOOT MAXIMUM TOTAL LENGTH BETWEEN DUCT AND CONNECTED AIR DEVICE.
10. COORDINATE THE REQUIREMENTS FOR HVAC OPENINGS AND SLEEVES IN BUILDING ELEMENTS WITH THE GC.
11. CONTRACTOR SHALL REFER TO SPECIFICATION SECTION 09900 FOR PAINTING REQUIREMENTS UNLESS OTHERWISE NOTED.
12. REFER TO ELECTRICAL DRAWINGS OR SPECIFICATIONS FOR INTERLOCKING WIRING REQUIREMENTS.
13. NO DUCTWORK SHALL BE INSTALLED OVER ELECTRICAL EQUIPMENT.
14. CONTRACTOR SHALL COORDINATE DUCTWORK INSTALLATION WITH OTHER TRADES SO THAT THE DUCTWORK IS INSTALLED BEFORE THE PIPING, LIGHTING AND ELECTRICAL CONDUIT.
15. PROVIDE ADEQUATE SUPPORT, PER THE MANUFACTURER'S RECOMMENDATIONS, FOR ALL HVAC EQUIPMENT.
16. CONTRACTOR SHALL BE RESPONSIBLE FOR CHECKING ELECTRICAL RATINGS FROM CERTIFIED DRAWINGS OF EQUIPMENT AND SHALL MAKE ANY BRANCH CIRCUIT DISTRIBUTION MODIFICATION REQUIREMENTS WITHOUT ANY ADDITIONAL COST TO OWNER. THE CONTRACTOR SHALL SUBMIT A SCHEDULE OF SUCH CHANGES FOR APPROVAL BY ENGINEER.
17. WHEREVER THE REQUIREMENTS AND REGULATIONS OF STATE, FEDERAL AND LOCAL AUTHORITIES HAVING JURISDICTION DIFFER FROM THE DRAWINGS OR SPECIFICATIONS, THEY SHALL TAKE PRECEDENCE AND SHALL BE MADE PART OF THE CONTRACT (EXCEPT WHERE THE DRAWINGS OR SPECIFICATIONS ARE MORE STRINGENT).
18. THE CONTRACTOR SHALL PROVIDE AND INSTALL FIRE AND SMOKE RATED DAMPERS IN HVAC DUCTS WHICH PENETRATE FIRE RATED BUILDING ASSEMBLIES AS SHOWN ON ARCHITECTURAL DRAWINGS.
19. DUCTWORK AND PLENUM TO LOUVERS SHALL BE CONNECTED TO FRAMED OPENINGS AND, SEALED AIRTIGHT AND WEATHER RESISTANT.
20. FANS SHALL BE PROVIDED WITH A DUCT COLLAR FOR INSTALLATION OF DUCT SMOKE DETECTORS.
21. THERMOSTATS, SENSORS, AND/OR CONTROL PANEL LOCATIONS SHOWN ARE APPROXIMATE AND SHALL BE COORDINATED TO SUIT FIELD CONDITIONS.
22. INSTALL WALL MTD SENSORS, CONTROLS AND THERMOSTATS 4'-0" AFF UNLESS OTHERWISE NOTED. ALIGN WITH OTHER NEARBY ITEMS SUCH AS LIGHT SWITCHES. DO NOT INSTALL CLOSER THAN 6-INCHES FROM EDGE OF DOOR FRAME OR CORNER OF WALL AS SHOWN ON ARCH PLANS. WHERE CONFLICTS MAY OCCUR WITH ITEMS SUCH AS LIGHT SWITCHES, MOUNT THE SENSOR OR CONTROL DEVICE 4'-6" AFF CENTERED ABOVE THE LIGHT SWITCH.
23. COORDINATE THE LOCATIONS OF HVAC ITEMS EXPOSED IN FINISHED SPACES W/ ARCHITECTURAL FEATURES INDICATED ON THE DRAWINGS.
24. PROVIDE ADEQUATE MEANS OF ACCESS CLEARANCE FOR ALL HVAC/MECHANICAL EQUIPMENT AND SYSTEMS THAT REQUIRE ACCESS FOR PROPER OPERATION, MAINTENANCE AND REPAIR PER RECOMMENDED MANUFACTURER CLEARANCES. PROVIDE ACCESS DOORS WHERE NECESSARY IN FINISHED WALLS OR DRYWALL CEILINGS FOR ACCESS TO VALVES, DAMPERS, OR CONTROL DEVICES.
25. COORDINATE THE REQUIREMENTS OF HVAC HANGERS AND SUPPORTS W/ OTHER PRIME CONTRACTORS PROVIDING STRUCTURAL AND/OR ARCHITECTURAL BUILDING ELEMENTS WHICH HVAC SUPPORTS SHALL INTERFACE.
26. HVAC CONTRACTOR SHALL PROVIDE ALL FIRESTOPPING AND PIPE SLEEVES FOR ALL PIPE AND DUCT PENETRATIONS THRU FIRE RATED BUILDING ASSEMBLIES.
27. CONTRACTOR SHALL OBTAIN AND PAY ALL FEES RELATED TO PERMITTING, AND INSPECTIONS.
28. FOR ADDITIONAL REQUIREMENTS SEE SPECIFICATIONS.

REQUEST FOR PROPOSAL

NO.	DATE	ISSUED FOR	BY
1	07/24/15	REQUEST FOR PROPOSAL	G.A.B.

PLOT DATE: 7/24/2015 4:41 PM BY: TBOCAS

DESIGNED B.L.S.
DRAWN C.M.S.
CHECKED B.L.S.
PROJ. ENGR. G.A.B.

BERNARD L. STEIGER P.E.
No. 49808

HAZEN AND SAWYER
Environmental Engineers & Scientists
4000 Hollywood Boulevard, Suite 750N
Hollywood, Florida 33021
Certificate of Authorization Number: 2771

SCALE –

CLIENTS PROJECT: –
ENGINEERS PROJECT: 44238-004
CAD REFERENCE: 44238-004BP3-H01

NORTH MIAMI FLORIDA
CITY OF NORTH MIAMI
PUBLIC WORKS UTILITIES

WINSON WATER TREATMENT PLANT
RELIABILITY IMPROVEMENTS – VOLUME C: WTP REHAB

HVAC SYMBOLS, ABBREVIATIONS AND NOTES

DATE: JULY 2015
SHEET: 310 OF 335
DRAWING: H-01

XREFs= ..\Tblock\44238-004-BP3-TB

File = H:\44238-004\Drawings\design build package\volume c - wtp rehab\Bid Package 3 - WTP Rehab\Hvac\44238-004BP3-H01 Saved by tbocas Save date = 5/18/2015 11:16 AM

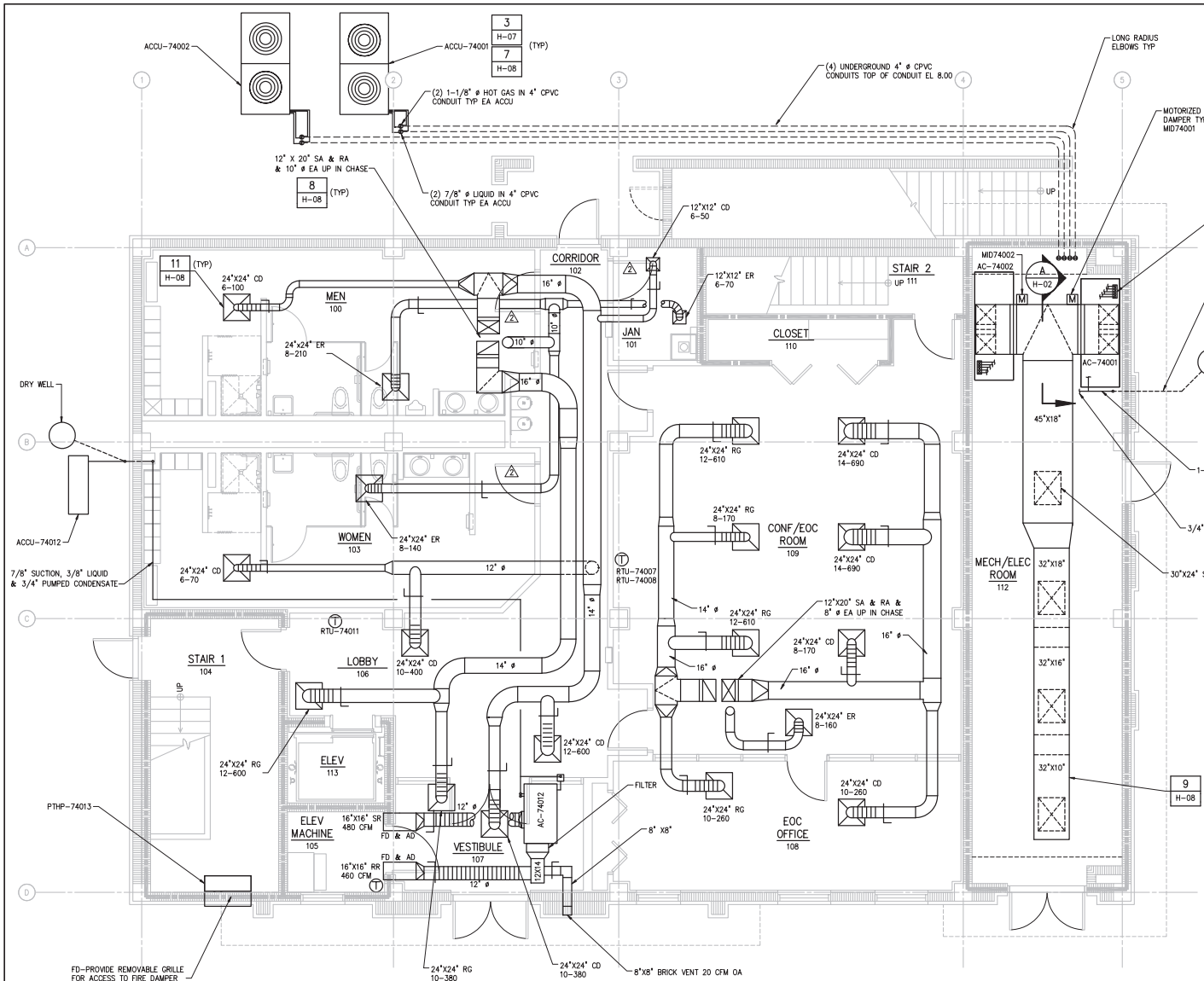

FIRST FLOOR HVAC PLAN
1/4" = 1'-0"

GENERAL NOTES:

1. ALL ROUND DUCT ELBOWS SHALL HAVE A CENTER LINE RADIUS OF 1.5 TIMES THE DIAMETER.
2. ELECTRICAL ROOM 112 IS AN UNOCCUPIED ELECTRICAL EQUIPMENT ROOM. THE AIR CONDITIONING SYSTEM IS DESIGNED FOR ELECTRICAL EQUIPMENT COOLING AND NOT FOR HUMAN OCCUPANCY OR COMFORT. THERE WILL BE NO OPERATORS WORKING IN THIS ROOM ON A REGULAR BASIS. BASED ON FLORIDA BUILDING COMMISSION RULE NO. 61G20.1.001, ENERGY CODE MODIFICATIONS, FOR 101.4.8 EXEMPT BUILDINGS, DATED 06-12-2012, THE ELECTRICAL ROOM IS EXEMPT FROM COMPLIANCE WITH THE FLORIDA BUILDING ENERGY CODE CHAPTER 13.

VENTILATION CALCULATIONS:

1. MINIMUM VENTILATION RATE PER 2010 FMC 403, TABLE 403.3, CRITICAL ZONE (CONF/EOC) SHALL BE 5 CFM PER PERSON, 0.06 CFM/SQ. FT. & 50 PEOPLE PER 1000 SQ. FT. TOILET ROOM EXHAUST SHALL BE 50 CFM PER WATER CLOSET/URINAL/SHOWER.
2. CONF/EOC OCCUPANT LOAD = 753 SQ. FT. X 50/1000 = 38 PEOPLE. 38 PEOPLE X 5 CFM/PERSON = 190 CFM. 753 SQ. FT. X 0.06 CFM/SQ. FT. = 45 CFM. TOTAL OUTSIDE AIR REQUIRED = 190 CFM + 45 CFM = 235 CFM. OUTSIDE AIR PROVIDED BY ROOF TOP UNITS RTU-74007/74008 = 290/1810 X 1550 CFM = 248 CFM.
3. FIRST FLOOR WATER CLOSET/URINAL/SHOWER QUANTITY = 7X50 = 350 CFM. EXHAUST PROVIDE BY EF-74003 FOR TOILET ROOMS = 350 CFM.

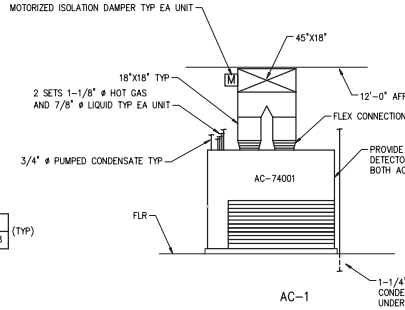

AC-1
SECTION A H-02
1/4" = 1'-0"

1/4"=1'-0"

NO.	DATE	ISSUED FOR	BY
1	07/24/15	REQUEST FOR PROPOSAL	G.A.B.

DESIGNED B.L.S.
DRAWN C.M.S.
CHECKED B.L.S.
PROJ. ENGR. G.A.B.

BERNARD L. STEIGER P.E.
No. 49808

HAZEN AND SAWYER
Environmental Engineers & Scientists
4000 Hollywood Boulevard, Suite 750N
Hollywood, Florida 33021
Certificate of Authorization Number: 2771

SCALE –

CLIENTS PROJECT: –
ENGINEERS PROJECT: 44238-004
CAD REFERENCE: 44238-004BP3-H02

CITY OF NORTH MIAMI
PUBLIC WORKS UTILITIES

WINSON WATER TREATMENT PLANT
RELIABILITY IMPROVEMENTS – VOLUME C: WTP REHAB
NEW ADMINISTRATION BUILDING
FIRST FLOOR – HVAC PLAN

DATE: JULY 2015
SHEET: 311 OF 335
DRAWING: H-02

REQUEST FOR PROPOSAL

PLOT DATE: 7/24/2015 4:41 PM BY: TBOCAS

XREFs= ..\Tblock\44238-004-BP3-TB,..\Base-BP3\H-BP3-Admin-Plan-Bottom,..\Base-BP3\A-BP3-Admin-Plan-Bottom-Reflected-Ceiling,..\Base-BP3\A-BP3-Admin-Plan-Bottom,..\Base-BP3\A-BP3-Admin-Plan-Col-Grid

File = H:\44238-004\Drawings\design build package\volume c - wtp rehab\Bid Package 3 - WTP Rehab\Hvac\44238-004BP3-H02 Saved by bsteiger Save date = 6/6/2014 5:30 PM

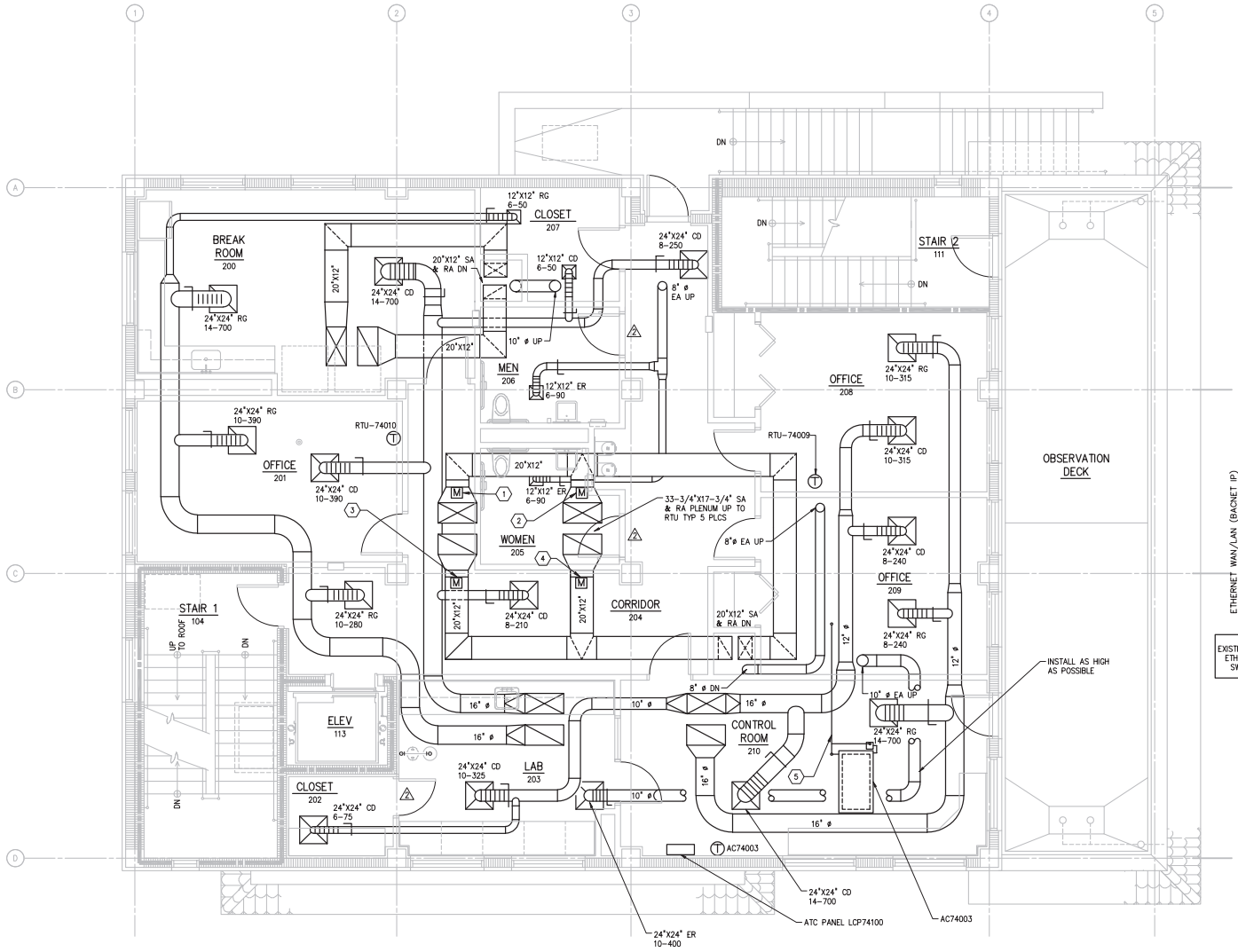

SECOND FLOOR HVAC PLAN
1/4" = 1'-0"

GENERAL NOTES:

1. ALL ROUND DUCT ELBOWS SHALL HAVE A CENTER LINE RADIUS OF 1.5 TIMES THE DIAMETER.

CODED NOTES:

1. MOTOR OPERATED ISOLATION DAMPER, MID-74007A.
2. MOTOR OPERATED ISOLATION DAMPER, MID-74008A.
3. MOTOR OPERATED ISOLATION DAMPER, MID-74007B.
4. MOTOR OPERATED ISOLATION DAMPER, MID-74008B.
5. 3/4" ø PUMPED CONDENSATE. 7/8" ø SUCTION AND 1/2" ø LIQUID TO ROOF MOUNTED ACCU-74003.

VENTILATION CALCULATIONS:

1. MINIMUM VENTILATION RATE PER 2010 FMC 403, TABLE 403.3 FOR CRITICAL ZONE (LAB) SHALL BE 10 CFM PER PERSON, 0.18 CFM PER SQ. FT., 25 PEOPLE PER 1000 SQ. FT. OF FLOOR AREA. TOILET ROOM EXHAUST SHALL BE 50 CFM PER WATER CLOSET/URINAL/SHOWER.
2. OUTSIDE AIR FOR CRITICAL ZONE (LAB) = 219 SQ. FT. X 25/1000 = 6 PEOPLE X 10 CFM/PERSON = 60 CFM. PLUS 219 SQ. FT. X 0.18 CFM/SQ. FT. = 39 CFM. TOTAL OUTSIDE AIR REQUIRED = 60 + 39 = 99 CFM. OUTSIDE AIR PROVIDED BY ROOF TOP UNIT RTU-74009 = 400 CFM X 414/1655 OUTSIDE AIR = 100 CFM.
3. SECOND FLOOR WATER CLOSET/URINAL/SHOWER QUANTITY = 2X50 = 100 CFM. EXHAUST PROVIDE BY EF-74005 FOR TOILET ROOMS = 180 CFM.

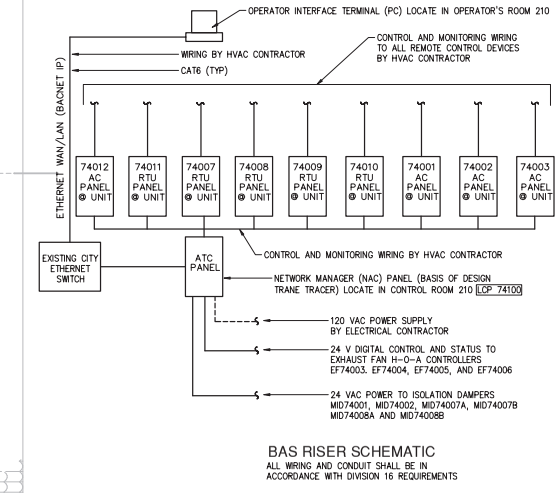

BAS RISER SCHEMATIC
ALL WIRING AND CONDUIT SHALL BE IN ACCORDANCE WITH DIVISION 16 REQUIREMENTS

1/4"=1'-0" 1 0 1 2 3 7'

NO.	DATE	ISSUED FOR	BY
1	07/24/15	REQUEST FOR PROPOSAL	G.A.B.

DESIGNED B.L.S.
DRAWN C.M.S.
CHECKED B.L.S.
PROJ. ENGR. G.A.B.

BERNARD L. STEIGER P.E.
No. 49808

HAZEN AND SAWYER
Environmental Engineers & Scientists
4000 Hollywood Boulevard, Suite 750N
Hollywood, Florida 33021
Certificate of Authorization Number: 2771

SCALE –

CLIENTS PROJECT: –
ENGINEERS PROJECT: 44238-004
CAD REFERENCE: 44238-004BP3-H03

NORTH MIAMI FLORIDA
CITY OF NORTH MIAMI
PUBLIC WORKS UTILITIES

WINSON WATER TREATMENT PLANT
RELIABILITY IMPROVEMENTS – VOLUME C: WTP REHAB
NEW ADMINISTRATION BUILDING
SECOND FLOOR – HVAC PLAN

DATE: JULY 2015
SHEET: 312 OF 335
DRAWING: H-03

REQUEST FOR PROPOSAL

PLOT DATE: 7/24/2015 4:41 PM BY: TBOCAS

XREFs= ..\Tblock\44238-004-BP3-TB,..\Base-BP3\H-BP3-Admin-Plan-Top,..\Base-BP3\A-BP3-Admin-Plan-Top,..\Base-BP3\A-BP3-Admin-Plan-Top-Reflected-Ceiling,..\Base-BP3\A-BP3-Admin-Plan-Col-Grid

File = H:\44238-004\Drawings\design build package\volume c - wtp rehab\Bid Package 3 - WTP Rehab\Hvac\44238-004BP3-H03 Saved by bsteiger Save date = 6/6/2014 5:30 PM

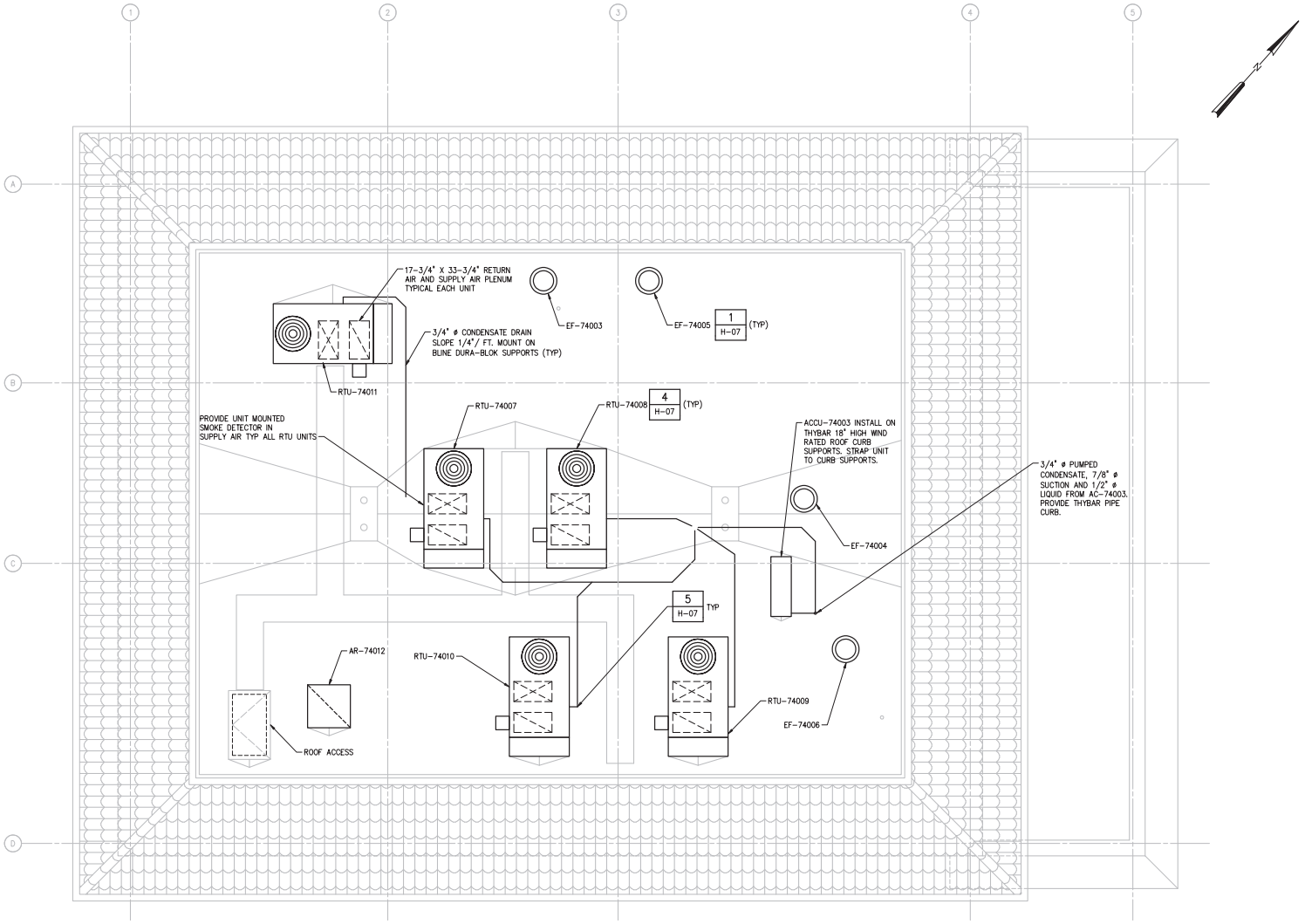

ROOF HVAC PLAN
1/4" = 1'-0"

1/4"=1'-0" 1 0 1 2 3 7'

NO.	DATE	ISSUED FOR	BY
1	07/24/15	REQUEST FOR PROPOSAL	G.A.B.

DESIGNED B.L.S.
DRAWN C.M.S.
CHECKED B.L.S
PROJ. ENGR. G.A.B.

BERNARD L. STEIGER P.E.
No. 49808

HAZEN AND SAWYER
Environmental Engineers & Scientists
4000 Hollywood Boulevard, Suite 750N
Hollywood, Florida 33021
Certificate of Authorization Number: 2771

SCALE –

CLIENTS PROJECT: –
ENGINEERS PROJECT: 44238-004
CAD REFERENCE: 44238-004BP3-H04

NORTH MIAMI FLORIDA
CITY OF NORTH MIAMI
PUBLIC WORKS UTILITIES

WINSON WATER TREATMENT PLANT
RELIABILITY IMPROVEMENTS – VOLUME C: WTP REHAB
NEW ADMINISTRATION BUILDING
ROOF – HVACPLAN

DATE: JULY 2015
SHEET: 313 OF 335
DRAWING: H-04

REQUEST FOR PROPOSAL

PLOT DATE: 7/24/2015 4:41 PM BY: TBOCAS

XREFs= ..\Tblock\44238-004-BP3-TB,..\Base-BP3\A-BP3-Admin-Plan-Roof,..\Base-BP3\H-BP3-Admin-Plan-Roof,..\Base-BP3\A-BP3-Admin-Plan-Col-Grid

File = H:\44238-004\Drawings\design build package\volume c - wtp rehab\Bid Package 3 - WTP Rehab\Hvac\44238-004BP3-H04 Saved by Bernard Save date = 6/6/2014 5:30 PM

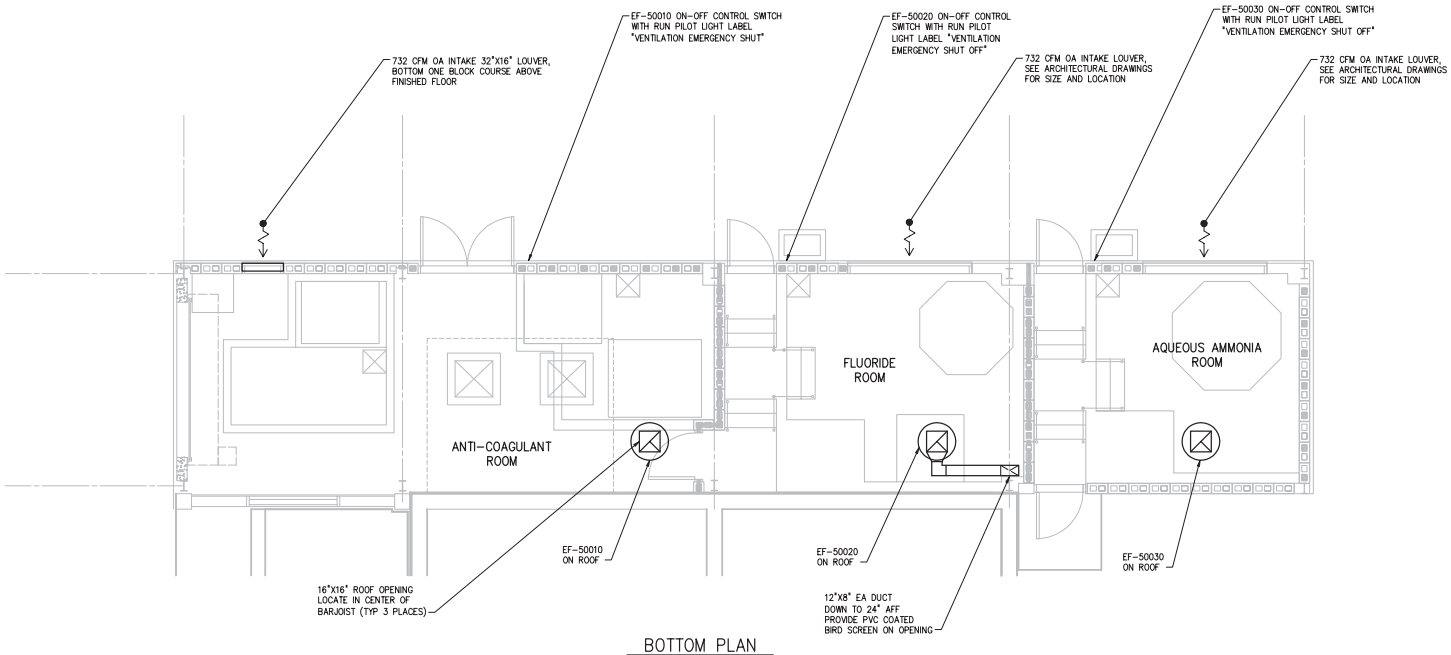

BOTTOM PLAN
1/4" = 1'-0"

VENTILATION CALCULATIONS:

1. MINIMUM VENTILATION RATE PER 2010 FMC 502.8 SHALL BE 1 CFM PER SQUARE FOOT OF FLOOR AREA.
2. COAGULANT ROOM: 482 SQUARE FEET = 482 CFM MINIMUM REQUIRED. 732 CFM PROVIDED BY EF-50010.
3. FLUORIDE ROOM: 262 SQUARE FEET = 262 CFM MINIMUM REQUIRED. 732 CFM PROVIDED BY EF-50020.
4. AMMONIA ROOM: 231 SQUARE FEET = 231 CFM MINIMUM REQUIRED. 732 CFM RPROVIDE BY EF-50030.

1/4"=1'-0"

NO.	DATE	ISSUED FOR	BY
1	07/24/15	REQUEST FOR PROPOSAL	G.A.B.

DESIGNED B.L.S.
DRAWN C.M.S.
CHECKED B.L.S.
PROJ. ENGR. G.A.B.

BERNARD L. STEIGER P.E.
No. 49808

HAZEN AND SAWYER
Environmental Engineers & Scientists
4000 Hollywood Boulevard, Suite 750N
Hollywood, Florida 33021
Certificate of Authorization Number: 2771

SCALE –

CLIENTS PROJECT: –
ENGINEERS PROJECT: 44238-004
CAD REFERENCE: 44238-004BP3-H05

NORTH MIAMI FLORIDA
CITY OF NORTH MIAMI
PUBLIC WORKS UTILITIES

WINSON WATER TREATMENT PLANT
RELIABILITY IMPROVEMENTS – VOLUME C: WTP REHAB
CHEMICAL HANDLING FACILITY HVAC PLAN

DATE: JULY 2015
SHEET: 314 OF 335
DRAWING: H-05

REQUEST FOR PROPOSAL

PLOT DATE: 7/24/2015 4:41 PM BY: TBOCAS

XREFs= ..\TBlock\44238-004-BP3-TB,..\Base-BP3\S-BP3-ChemHand-Plan,..\Base-BP3\H-BP3-ChemHand-Plan

File = H:\44238-004\Drawings\design build package\volume c - wtp rehab\Bid Package 3 - WTP Rehab\Hvac\44238-004BP3-H05 Saved by tbocas Save date = 7/24/2015 4:12 PM

PRECISION AIR CONDITIONING SCHEDULE

UNIT No.	LOCATION	AREA SERVED	MFG & MODEL (OR EQUAL)	TYPE	*CAPACITY BTU/HR		FAN DATA				DX-COOLING COIL DATA			ELECTRIC HEAT		ELECTRIC				NOTES
					TOTAL	SENSIBLE	NUMBER	CFM	H.P.	E.S.P.	AREA S.F.	ROWS	F.P.M.	STAGES	K.W.	FLA	WSA	OPD	V/P/HZ	
AC-74001	ADMINISTRATION BUILDING	ELECTRICAL ROOM	LIEBERT VS053ASA0S	AIR COOLED	193,800	186,800	2	8,000	5	0.8	24.7	3	319.8	SCR	25	56.7	69	70	460 / 3 / 60	1,2,3,4,5,6,7,8
AC-74002	ADMINISTRATION BUILDING	ELECTRICAL ROOM	LIEBERT VS053ASA0S	AIR COOLED	193,800	186,800	2	8,000	5	0.8	24.7	3	319.8	SCR	25	56.7	69	70	460 / 3 / 60	2,3,4,5,6,7,8,9
AC-74003	ADMINISTRATION BUILDING	CONTROL ROOM	LIEBERT MMD36E7A	AIR COOLED	33,800	33,800	1	1,250	0.5	0.3	3.1	3	394	1	7.3	9.8	12.3	15	460 / 3 / 60	4,5,10,11
AC-74012	ADMINISTRATION BUILDING	ELEVATOR MACHINE ROOM	LIEBERT MMD12E7P	AIR COOLED	14,400	13,500	1	480	0.2	0.3	2.44	2	232	1	3.6	20.2	25.3	30	208 / 1 / 60	4,5,10,11,12

* 63° F EWB, 80° F EDB AND 95° F DB AMBIENT

NOTES:
1. OPERATING UNIT.
2. 11.0 EER MATCHED WITH ACCU.
3. WITH RETURN AIR GRILLE.
4. SEE SCHEDULE BELOW FOR ACCU.
5. SPECIFICATION 15800.
6. WEIGHT 2100 POUNDS.
7. PROVIDE 4" HIGH HOUSEKEEPING CONCRETE SUPPORT PAD.
8. UNIT SHALL BE DESIGNED FOR FRONT PANEL SERVICE.
9. STANDBY UNIT.
10. WEIGHT 250 POUNDS.
11. 13 SEER MATCHED WITH ACCU.
12. SET THERMOSTAT SENSITIVITY AT 6°F.

PRECISION AIR COOLED CONDENSER UNIT SCHEDULE

UNIT No.	LOCATION	AREA SERVED	UNIT SERVED	MFG & MODEL (OR EQUAL)	AMBIENT TEMP (F)	HEAT REJECTION			CONDENSER FAN				ELECTRIC				NOTES
						KBTUH	KW	REFRIG.	DIA IN	HP EA.	CFM	QTY	FLA	WSA	OPD	V/P/HZ	
ACCU-74001	ADMINISTRATION BUILDING	ELECTRICAL ROOM	AC-74001	LIEBERT CD 308	100	238	69.3	R407C	26	3/4	16,650	3	5.9	6.5	15	460 / 3 / 60	1,2,3,4,5
ACCU-74002	ADMINISTRATION BUILDING	ELECTRICAL ROOM	AC-74002	LIEBERT CD 308	100	238	69.3	R407C	26	3/4	16,650	3	5.9	6.5	15	460 / 3 / 60	1,2,3,4,5
ACCU-74003	ADMINISTRATION BUILDING	CONTROL ROOM	AC-74003	LIEBERT PFH037ACAH7	105	37	10.8	R407C	–	0.2	3,000	1	7.4	8.8	15	460 / 3 / 60	4,6,7
ACCU-74012	ADMINISTRATION BUILDING	ELEVATOR MACHINE ROOM	AC-?	LIEBERT PFH014ACPL7	95	14	4.1	R407C	–	0.2	2,200	1	9.1	11.0	15	208 / 1 / 60	4,6,7

NOTES:
1. LOW AMBIENT CONTROL.
2. SOUND PRESSURE 77.3 dBA.
3. 11.0 EER MATCHED WITH AC UNIT.
4. SPECIFICATION 15800.
5. WEIGHT 700 POUNDS.
6. WEIGHT 350 POUNDS.
7. 13 SEER MATCHED WITH AC UNIT.

DESIGN CONDITIONS

TEMPERATURES
OUTSIDE WINTER: 46° F DB INSIDE WINTER: 72° F DB
OUTSIDE SUMMER: 90° F DB / 77° F WB INSIDE SUMMER 72° F
ENERGY CODE COMPLIANCE METHOD
TOTAL BUILDING PERFORMANCE ENERGY GAUGE CALCULATIONS SUBMITTAL

FAN SCHEDULE

MARK No.	LOCATION	AREA SERVED	MANUFACTURER & MODEL No.	TYPE	CFM	SP (IN WG)	SONES	FAN RPM	MOTOR					WEIGHT POUNDS	ROOF OPENG	FAN INTERLOCK SCHEDULE		NOTES
									HP	MAX. BHP	RPM	ELEC.	DRIVE			CONTROL	WITH	
EF-74003	ADMINISTRATION BUILDING	MEN/WOMEN/JAN (100,101,103)	GREENHECK CUE-090-VG	CENTRIFUGAL	420	0.58	7.9	1550	1/6	0.09	1,550	120 / 1 / 60	DIRECT	60	12-1/2X12-1/2	HOA	BAS-RTU74011	1,2
EF-74004	ADMINISTRATION BUILDING	CONFERENCE/EOC (109)	GREENHECK CUE-070D	CENTRIFUGAL	160	0.38	3.9	1550	1/8	0.02	1,550	120 / 1 / 60	DIRECT	30	10-1/2X10-1/2	HOA	BAS-RTU74007 & 8	1,2
EF-74005	ADMINISTRATION BUILDING	MEN/WOMEN (205,206)	GREENHECK CUE-070D	CENTRIFUGAL	180	0.36	3.9	1550	1/8	0.02	1,550	120 / 1 / 60	DIRECT	30	10-1/2X10-1/2	HOA	BAS-RTU74010	1,2
EF-74006	ADMINISTRATION BUILDING	LAB (203)	GREENHECK CUE-085-VG	CENTRIFUGAL	400	0.36	7.4	1550	1/6	0.05	1,550	120 / 1 / 60	DIRECT	30	12-1/2X12-1/2	HOA	BAS-RTU74009	1,2
EF-50010	CHEMICAL HANDLING FACILITY	COAGULANT ROOM	AEROVENT AWAB-14	CENTRIFUGAL	732	0.50	11.9	1125	1/4	0.12	1,750	120 / 1 / 60	BELT	80	16X16	ON-OFF	NONE	1
EF-50020	CHEMICAL HANDLING FACILITY	FLUORIDE ROOM	AEROVENT AWAB-14	CENTRIFUGAL	732	0.50	11.9	1125	1/4	0.12	1,750	120 / 1 / 60	BELT	80	16X16	ON-OFF	NONE	1
EF-50030	CHEMICAL HANDLING FACILITY	AMMONIA ROOM	AEROVENT AWAB-14	CENTRIFUGAL	732	0.50	11.9	1125	1/4	0.12	1,750	120 / 1 / 60	BELT	80	16X16	ON-OFF	NONE	1

NOTES:
1. SPECIFICATION 15800.
2. HI PRO POLYESTER COATING.

PACKAGED ROOF TOP UNIT SCHEDULE

UNIT No.	LOCATION	AREA SERVED	MANUFACTURER & MODEL No.	TYPE	CAPACITY BTU/HR		INDOOR FAN DATA					ELECTRIC HEAT		ELECTRICAL			NOTES
					TOTAL	SENSIBLE	TYPE	CFM	H.P.	E.S.P.	OA CFM	STAGES	K.W.	MCA	MAX FUSE/CB	V/P/HZ	
RTU-74007	ADMINISTRATION BUILDING	ADMINISTRATION	TRANE – THC067	CONVERTIBLE	58,600	43,600	DIRECT/VS	1,810	1	1.00	290 MINIMUM	1	6.0	15.2	20	460/3/60	1,2,3,4,5,6,7,8,10
RTU-74008	ADMINISTRATION BUILDING	ADMINISTRATION	TRANE – THC067	CONVERTIBLE	58,600	43,600	DIRECT/VS	1,810	1	1.00	290 MINIMUM	1	6.0	15.2	20	460/3/60	1,2,3,4,5,6,7,9,10
RTU-74009	ADMINISTRATION BUILDING	ADMINISTRATION	TRANE – THC067	CONVERTIBLE	56,900	41,700	DIRECT/VS	1,655	1	1.00	414 MINIMUM	1	6.0	15.2	20	460/3/60	1,2,3,4,5,6,7,8,10
RTU-74010	ADMINISTRATION BUILDING	ADMINISTRATION	TRANE – THC067	CONVERTIBLE	56,900	41,700	DIRECT/VS	1,600	1	1.00	240 MINIMUM	1	6.0	15.2	20	460/3/60	1,2,3,4,5,6,7,8,10
RTU-74011	ADMINISTRATION BUILDING	ADMINISTRATION	TRANE – THC067	CONVERTIBLE	56,900	41,700	DIRECT/VS	1,600	1	1.00	420 MINIMUM	2	12.0	23.9	25	460/3/60	1,2,3,4,5,6,7,8,10

NOTES:
1. WITH ECONOMIZER.
2. LEED REQUIRED SEER 17.2 PER ARI 210/240.
3. R-410A REFRIGERANT.
4. PROVIDE HINGED ACCESS DOORS.
5. WEIGHT: 550 POUNDS.
6. SEE SPECIFICATION 15800.
7. SCHEDULED CAPACITY AT 95° DB OUTDOOR AND 80° EDB / 67° EWB EVAPORATOR COIL TEMPERATURE.
8. OPERATING
9. STANDBY
10. UNIT MOUNTED FAN POWERED EXHAUST OF RETURN AIR, WHEN USING ECONOMIZER, SHALL MAINTAIN BUILDING PRESSURIZATION. FAN MOTOR 460V, 1ø, 2.2 FLA, 0.33 BHP, 1075 RPM.

AIR DEVICE SCHEDULE

MARK No.	LOCATION	AREA SERVED	MANUFACTURER & MODEL No.	MATERIAL	FACE SIZE (INCHES)	MAX. S.P. IN WG	MOUNTING	NOTES
CD	ADMINISTRATION BUILDING	OFFICES	KRUEGER 51400	ALUMINUM	SEE PLANS	0.05	CEILING	1
RG	ADMINISTRATION BUILDING	OFFICES	KRUEGER 56690	ALUMINUM	SEE PLANS	0.03	CEILING	–
ER	ADMINISTRATION BUILDING	OFFICES	KRUEGER 56690	ALUMINUM	SEE PLANS	0.03	CEILING	–
SR	ADMINISTRATION BUILDING	ELECTRICAL ROOM	KRUEGER 5880	ALUMINUM	SEE PLANS	0.03	DUCT	2
RR	ADMINISTRATION BUILDING	ADMINISTRATION	KRUEGER S580	ALUMINUM	SEE PLANS	0.03	DUCT	2

NOTES:
1. WITH IB INSULATION BACKING. 2. WITH OPPOSED BLADE DAMPER.

INTAKE / RELIEF VENT SCHEDULE

MARK No.	LOCATION	AREA SERVED	MFG & MODEL	TYPE	CFM	THROAT (AREA)	SP (IN)	WEIGHT (LB)	CURB CAP		NOTES
									WIDTH (IN)	LENGTH (IN)	
AR-74012	ROOF	ELEVATOR SHAFT	GREENHECK PEV400	RELIEF	3000	10 SQ FT	0.01	495	38	38	1,2,3,4

NOTES:
1. BIRD SCREEN. 2. 24" HIGH CURB. 3. KYNAR COATING. 4. 120V, SINGLE PHASE SMOKE DAMPER ACTUATOR, FAIL OPEN WITH OPEN OR CLOSED INDICATOR.

PACKAGED TERMINAL HEAT PUMP SCHEDULE

MARK No.	LOCATION	AREA SERVED	MFG & MODEL	OA CFM	CFM	COOL (BTUH)	EER	HEAT (BTUH)	ELECTRIC HEAT (KW)	ELECTRIC	
										V/PH/HZ	OPD(AMPS)
PTHP-74013	ADMIN BUILDING	STAIR WELL	GEAZ61H09DABCD	70	360	9400	12.7	8300	2.45	208/1/60	15

NO.	DATE	ISSUED FOR	BY
1	07/24/15	REQUEST FOR PROPOSAL	G.A.B.

DESIGNED B.L.S.
DRAWN C.M.S.
CHECKED B.L.S.
PROJ. ENGR. G.A.B.

BERNARD L. STEIGER P.E.
No. 49808

HAZEN AND SAWYER
Environmental Engineers & Scientists
4000 Hollywood Boulevard, Suite 750N
Hollywood, Florida 33021
Certificate of Authorization Number: 2771

SCALE –

CLIENTS PROJECT: –
ENGINEERS PROJECT: 44238-004
CAD REFERENCE: 44238-004BP3-H06

NORTH MIAMI FLORIDA
CITY OF NORTH MIAMI
PUBLIC WORKS UTILITIES

WINSON WATER TREATMENT PLANT
RELIABILITY IMPROVEMENTS – VOLUME C: WTP REHAB

HVAC SCHEDULES

DATE: JULY 2015
SHEET: 315 OF 335
DRAWING: H-06

REQUEST FOR PROPOSAL

PLOT DATE: 7/24/2015 4:41 PM BY: TBOCAS
XREFs= ..\Tblock\44238-004-BP3-TB
File = H:\44238-004\Drawings\design build package\volume c - wtp rehab\Bid Package 3 - WTP Rehab\Hvac\44238-004BP3-H06 Saved by tbocas Save date = 5/18/2015 11:16 AM

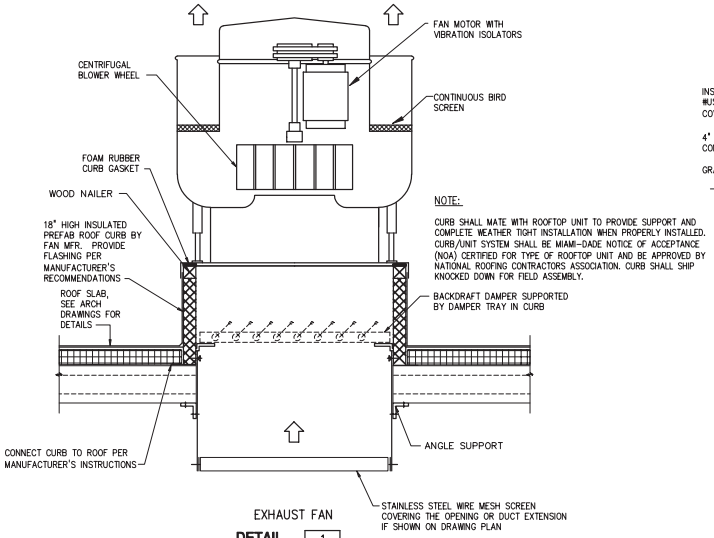

NOTE:

CURB SHALL MATE WITH ROOFTOP UNIT TO PROVIDE SUPPORT AND COMPLETE WEATHER TIGHT INSTALLATION WHEN PROPERLY INSTALLED. CURB/UNIT SYSTEM SHALL BE MIAMI-DADE NOTICE OF ACCEPTANCE (NOA) CERTIFIED FOR TYPE OF ROOFTOP UNIT AND BE APPROVED BY NATIONAL ROOFING CONTRACTORS ASSOCIATION. CURB SHALL SHIP KNOCKED DOWN FOR FIELD ASSEMBLY.

EXHAUST FAN

DETAIL 1
N.T.S. –

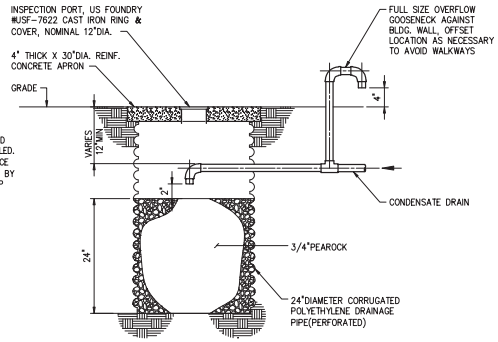

DRY WELL

DETAIL 2
N.T.S. –

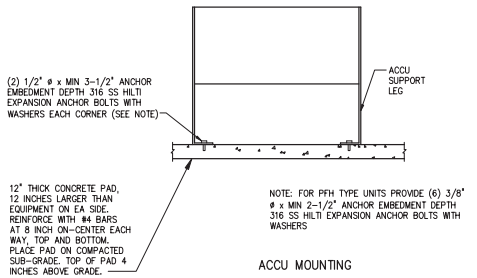

ACCU MOUNTING

DETAIL 3
N.T.S. –

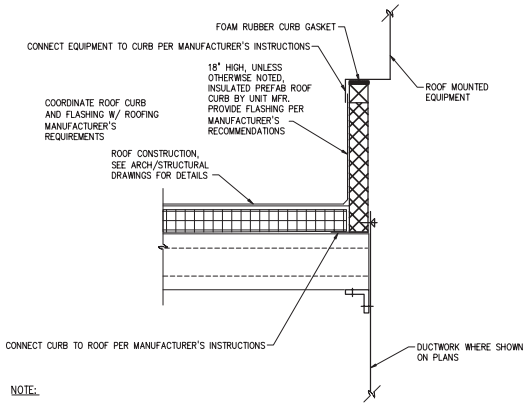

NOTE:

CURB SHALL MATE WITH ROOFTOP UNIT TO PROVIDE SUPPORT AND COMPLETE WEATHER TIGHT INSTALLATION WHEN PROPERLY INSTALLED. CURB/UNIT SYSTEM SHALL BE MIAMI-DADE NOTICE OF ACCEPTANCE (NOA) CERTIFIED FOR TYPE OF ROOFTOP UNIT AND BE APPROVED BY NATIONAL ROOFING CONTRACTORS ASSOCIATION. CURB SHALL SHIP KNOCKED DOWN FOR FIELD ASSEMBLY.

ROOF CURB

DETAIL 4
N.T.S. –

NOTES:
1. ALLOW SUFFICIENT SPACE BELOW DRAIN PAN FOR TRAP
2. PITCH DRAIN FOR PROPER RUNOFF.
3. MANUALLY PRIME FILL TRAP BEFORE START-UP TO FORM INITIAL DRAIN SEAL.
4. SUPPORT LENGTHY DRAIN LINES TO PREVENT SAG AND CONDENSATE OVERFLOW.

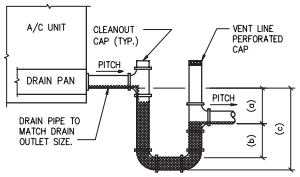

DRAW THROUGH COIL (NEGATIVE PRESSURE):

(a) 1 INCH FOR EACH INCH OF NEGATIVE PRESSURE PLUS 1 INCH (NEGATIVE STATIC PRESSURE IN INCHES WG WITH DIRTY FILTERS, COILS, AND MAXIMUM AIR FLOW)

(b) THIS DIMENSION IN INCHES MUST BE EQUAL TO MIN. 1/2 OF THE (a) ABOVE

(c) EQUALS (a) + (b) + PIPE DIA. + + INSULATION

BLOW THROUGH COIL (POSITIVE PRESSURE):

(a) 1 INCH MINIMUM

(b) 1 INCH PLUS THE TOTAL UNIT STATIC PRESSURE (POSITIVE STATIC PRESSURE IN INCHES WG)

(c) EQUALS (a) + (b) + PIPE DIA. + + INSULATION

THIS STANDARD DETAIL MUST BE REVIEWED AND SITE ADAPTED BY CONTRACTOR PRIOR TO USE FOR FINAL EQUIPMENT.

CONDENSATE DISPOSAL

DETAIL 5
N.T.S. –

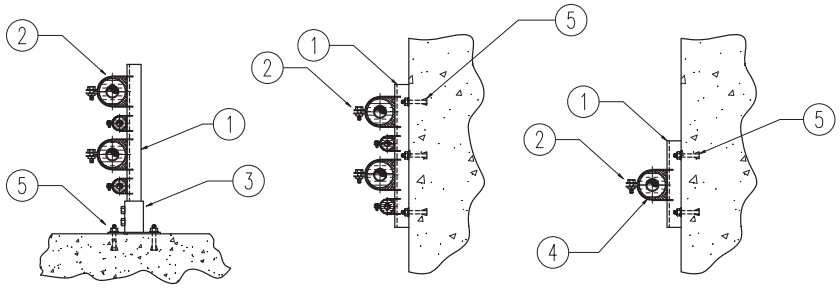

FLOOR/SLAB SUPPORT

WALL SUPPORT

WALL SUPPORT CONDENSATE

KEYED NOTES:
1. STAINLESS STEEL CHANNEL, B-LINE B22 OR EQUAL.
2. INSULATED REFRIGERANT TUBE CLAMP, B-LINE ARMIFIX OR EQUAL.
3. STAINLESS STEEL POST BASE, B-LINE B280SQ OR EQUAL.
4. INSULATED PVC CONDENSATE DRAIN PIPE, SUPPORT SEPARATELY TO ALLOW MINIMUM SLOPE OF 1/4" PER FOOT.
5. 3/8" DIAMETER STAINLESS STEEL EXPANSION ANCHOR, NUT AND WASHER, TYP.
6. PIPE SUPPORT SPACING PER FLORIDA MECHANICAL CODE TABLE 305.4.
7. SEE PLANS FOR NUMBER OF CIRCUITS REQUIRED.

PIPE SUPPORT

DETAIL 6
N.T.S. –

NO.	DATE	ISSUED FOR	BY
1	07/24/15	REQUEST FOR PROPOSAL	G.A.B.

DESIGNED B.L.S.
DRAWN C.M.S.
CHECKED B.L.S.
PROJ. ENGR. G.A.B.

BERNARD L. STEIGER P.E.
No. 49808

HAZEN AND SAWYER
Environmental Engineers & Scientists
4000 Hollywood Boulevard, Suite 750N
Hollywood, Florida 33021
Certificate of Authorization Number: 2771

SCALE –

CLIENTS PROJECT: –
ENGINEERS PROJECT: 44238-004
CAD REFERENCE: 44238-004BP3-H07

NORTH MIAMI FLORIDA
CITY OF NORTH MIAMI
PUBLIC WORKS UTILITIES

WINSON WATER TREATMENT PLANT
RELIABILITY IMPROVEMENTS – VOLUME C: WTP REHAB

HVAC DETAILS SHEET 1

DATE: JULY 2015
SHEET: 316 OF 335
DRAWING: H-07

REQUEST FOR PROPOSAL

PLOT DATE: 7/24/2015 4:41 PM BY: TBOCAS
XREFs= ..\Tblock\44238-004-BP3-TB
File = H:\44238-004\Drawings\design build package\volume c - wtp rehab\Bid Package 3 - WTP Rehab\Hvac\44238-004BP3-H07 Saved by Bernard Save date = 6/8/2014 5:30 PM

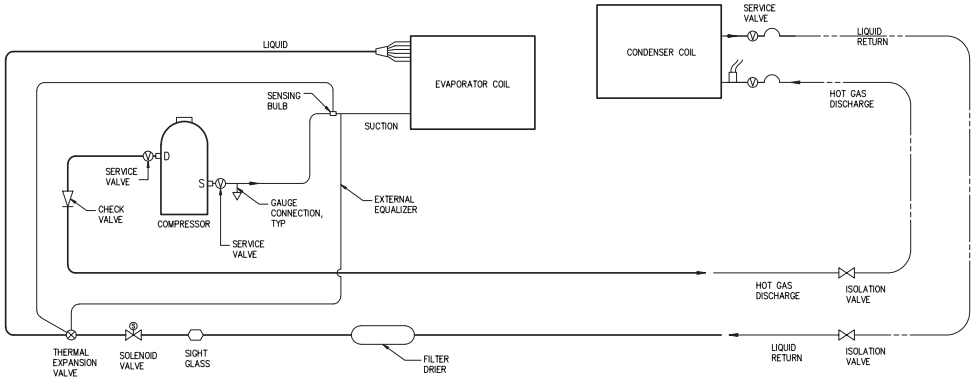

NOTE: SEE PLANS FOR NUMBER OF REFRIGERATION CIRCUITS REQUIRED. SINGLE REFRIGERATION CIRCUIT SHOWN FOR CLARITY.

REFRIGERANT PIPING INDOOR COMPRESSORS

DETAIL 7
N.T.S. –

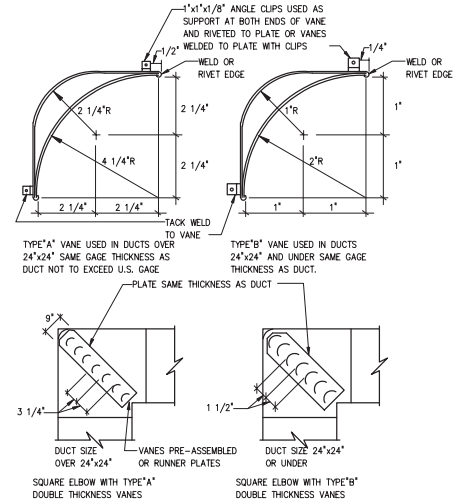

TURNING VANES

DETAIL 8
N.T.S. –

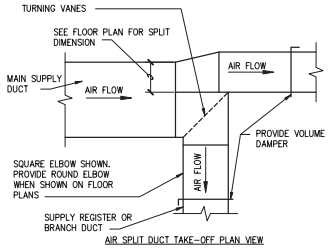

AIR SPLIT DUCT TAKE-OFF PLAN VIEW

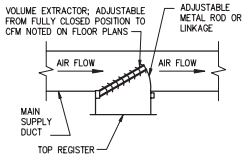

SUPPLY REGISTER TAKE-OFF PLAN VIEW

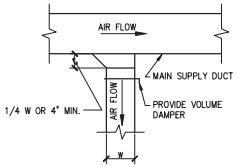

BRANCH DUCT TAKE-OFF PLAN VIEW

NOTE:

1. THE SUPPLY REGISTER TAKE-OFF MAY BE USED FOR UP UP TO 25% OF THE MAIN DUCT CFM. THE BRANCH DUCT TAKE-OFF MAY BE USED FOR UP TO 15% OF THE MAIN DUCT CFM ANYTIME AND UP TO 40% WHEN THE MAIN DUCT VELOCITY IS 1000 FPM [5 M/S] OR LESS. THE AIR SPLIT DUCT TAKE-OFF SHALL BE USED IN ALL OTHER CASES AND MAY BE USED AT ANYTIME.

DUCTWORK

DETAIL 9
N.T.S. –

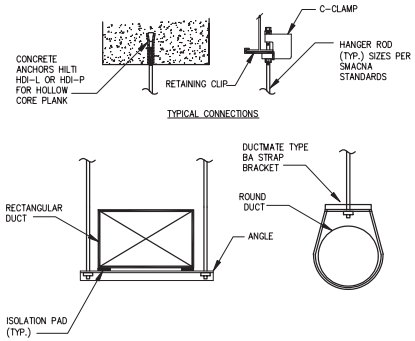

DUCT HANGER SUPPORT

DETAIL 10
N.T.S. –

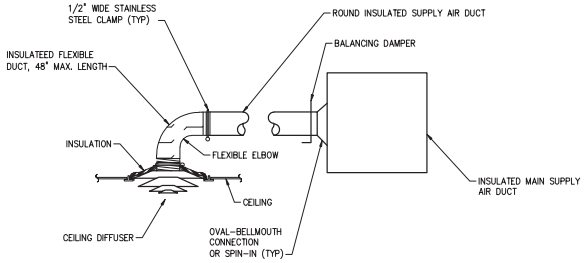

DUCT RUN OUT

DETAIL 11
N.T.S. –

NO.	DATE	ISSUED FOR	BY
1	07/24/15	REQUEST FOR PROPOSAL	G.A.B.

DESIGNED B.L.S.
DRAWN C.M.S.
CHECKED B.L.S.
PROJ. ENGR. G.A.B.

BERNARD L. STEIGER P.E.
No. 49808

HAZEN AND SAWYER
Environmental Engineers & Scientists
4000 Hollywood Boulevard, Suite 750N
Hollywood, Florida 33021
Certificate of Authorization Number: 2771

SCALE –

CLIENTS PROJECT: –
ENGINEERS PROJECT: 44238-004
CAD REFERENCE: 44238-004BP3-H08

NORTH MIAMI FLORIDA
CITY OF NORTH MIAMI
PUBLIC WORKS UTILITIES

WINSON WATER TREATMENT PLANT
RELIABILITY IMPROVEMENTS – VOLUME C: WTP REHAB

HVAC DETAILS SHEET 2

DATE: JULY 2015
SHEET: 317 OF 335
DRAWING: H-08

REQUEST FOR PROPOSAL

PLOT DATE: 7/24/2015 4:42 PM BY: TBOCAS
XREFs= ..\Tblock\44238-004-BP3-TB
File = H:\44238-004\Drawings\design build package\volume c - wtp rehab\Bid Package 3 - WTP Rehab\Hvac\44238-004BP3-H08 Saved by Bernard Save date = 6/6/2014 5:30 PM

ABBREVIATIONS

AC	ACETYLENE GAS
AD	AREA DRAIN
AR	ARGON GAS
AFF	ABOVE FINISHED FLOOR
AV	ACID VENT
AW	ACID WASTE
BFG	BELOW FINISHED GRADE
BFP	BACKFLOW PREVENTER
BFV	BUTTERFLY VALVE
BLDG	BUILDING
CA	COMPRESSED AIR
CC	CENTER TO CENTER
CFM	CUBIC FEET PER MINUTE
CI	CAST IRON
CO	CLEAN OUT
COL	COLUMN
CPLG	COUPLING
CF	CUBIC FEET
CU	COPPER
CV	CHECK VALVE
CW	COLD WATER
DFU	DRAINAGE FIXTURE UNIT
DI	DUCTILE IRON
DIA	DIAMETER
DN	DOWN TO FLOOR BELOW
DR	DRAIN
DW	DEIONIZED WATER
DWV	DRAIN, WASTE AND VENT
DROP	DROP IN EXISTING STORY
EL	ELEVATION
ESE	EMERGENCY SHOWER AND EYEWASH
EW	EMERGENCY EYEWASH
FAI	FRESH AIR INLET
FD1	FLOOR DRAIN TYPE 1
FLR	FLOOR
FT	FEET
FU	FIXTURE UNIT
FL	FLOOR
FLG	FLANGE
FM	FACTORY MUTUAL
FS	FLOW SWITCH
GAS	NATURAL GAS
GAL	GALLON
GPM	GALLONS PER MINUTE
GAL	GALLON
GC	GENERAL CONTRACTOR
GCO	GRADE CLEAN OUT
HB	HOSE BIBB
HPLW	HIGH PRUITY LAB WATER
HR	HOSE REEL
HW	HOT WATER
HWC	HOT WATER RECIRCULATION
HWH	HOT WATER HEATER
GS	GALVANIZED STEEL
GV	GATE VALVE
HP	HORSEPOWER
IE	INVERT ELEVATION
IN	INCH
IW	INDIRECT WASTE
IRI	INDUSTRIAL RISK INSURANCE
JST	JOIST
LAV1	LAVATORY TYPE 1
LB	POUND
MAX	MAXIMUM
MIN	MINIMUM
MR	MOP RECEPTOR
MSB	MOP SERVICE BASIN
NFPA	NATIONAL FIRE PROTECTION ASSOCIATION
NO	NITROUS OXIDE GAS
NPW	NON POTABLE WATER
NRS	NON RISING STEM
NTS	NOT TO SCALE
OD	OUTSIDE DIAMETER
OSY	OUTSIDE SCREW AND YOKE
PIV	POST INDICATOR VALVE
PSI	POUNDS PER SQUARE INCH
PSIG	POUNDS PER SQUARE INCH GAGE
PVC	POLY VINYL CHLORIDE
PW	POTABLE WATER
RD1	ROOF DRAIN TYPE 1
RISE	RISE IN EXISTING STORY
RPM	REVOLUTIONS PER MINUTE
RPZ	REDUCED PRESSURE ZONE BFP
SAN	SANITARY
SCH	SCHEDULE
SD	STORM DRAIN
SF	SQUARE FOOT
SPD	SUMP PUMP DISCHARGE
SS	SANITARY SEWER
TYP	TYPICAL
TW	TEMPERED WATER
UON	UNLESS OTHERWISE NOTED
UP	UP TO FLOOR ABOVE
UL	UNDERWRITERS LABORATORY
UR	URINAL
V	VENT
VA	VALVE
VAC	VACUUM
VB	VACUUM BREAKER
VIV	VALVE IN VERTICAL
VTR	VENT THROUGH ROOF
W	WASTE
WC1	WATER CLOSET TYPE 1
WCO	WALL CLEAN OUT
WFD	WATER FLOW DETECTOR
WFU	WATER FIXTURE UNIT
WH	WALL HYDRANT
WHA	WATER HAMMER ARRESTER
WFS	WATER FLOW SWITCH
WT	WEIGHT

SYMBOLS

- SAN OR WASTE PIPE ABOVE GROUND OR FLOOR
- SAN OR WASTE PIPE BELOW GROUND OR FLOOR
- V — VENT
- POTABLE/COLD WATER
- TEMPERED WATER RECIRCULATION
- HWR — HOT WATER RE-CIRCULATION
- HOT WATER
- AR — ARGON GAS
- AG — ACETYLENE GAS
- CA — COMPRESSED AIR
- HIGH PURITY LABORATORY WATER (HPLW)
- GAS — NATURAL GAS
- PG — PROPANE GAS
- TEMPERED WATER (TW)
- GATE VALVE
- GLOBE VALVE
- GAS COCK OR PLUG VALVE
- BUTTERFLY VALE
- CHECK VALVE
- BACKFLOW PREVENTER DOUBLE CHECK VALVE
- BACKFLOW PREVENTER REDUCED PRESSURE ZONE (RPZ)
- METER
- PIPE CAP
- AUTOMATIC CONTROL VALVE 2-WAY
- AUTOMATIC CONTROL VALVE 3-WAY
- SOLENOID OPERATED VALVE
- BALL VALVE (BV)
- PIPING ELBOW, 90 TURNED DOWN
- PIPING ELBOW, 90 TURNED UP
- PIPING TEE, OUTLET TURNED DOWN
- PIPING TEE, OUTLET TURNED UP
- PRESSURE GAGE WITH SHUTOFF COCK (BALL VALVE)
- THERMOMETER
- FD OR RD — FLOOR OR ROOF DRAIN
- P-TRAP
- FLOOR CLEAN OUT
- CIRCULATING PUMP
- STRAINER WYE TYPE WITH BALL VALVE BLOW OFF

PLUMBING GENERAL NOTES

1. THE ENTIRE PLUMBING SYSTEM SHALL BE IN ACCORDANCE WITH THE PLUMBING CODE REGULATIONS AND LOCAL PLUMBING INSPECTOR.
2. THE PIPING INDICATED ON THESE PLANS ARE DIAGRAMMATIC. ALL WORK SHALL BE COORDINATED WITH ALL OTHER TRADES PRIOR TO INSTALLATION. CONTRACTOR SHALL COORDINATE ROUTING OF ALL PIPING WITH EXISTING CONDITIONS AND SHALL PROVIDE ANY NECESSARY OFFSETS, REROUTING, TEES, ELBOWS, ETC. REQUIRED FOR A COMPLETE AND COORDINATED INSTALLATION.
3. THE CONTRACTOR SHALL OBTAIN AND PAY ALL FEES RELATED TO PERMITTING, AND INSPECTIONS.
4. CONTRACTOR SHALL COORDINATE ANY PLUMBING OR PIPING SYSTEM SHUT DOWN WITH THE OWNER 48 HOURS IN ADVANCE. SEE SPECS FOR COORDINATION REQUIREMENTS. VERIFY EXISTING WATER PRESSURE AT POINT OF NEW CONNECTION. PROVIDE BOOSTER PUMP AS NECESSARY TO PROVIDE ADEQUATE WATER PRESSURE TO FURTHEST FIXTURE. NEW CONNECTION POINT SHALL BE AT PIPE OF EQUAL SIZE OR GREATER THEN NEW PIPE.
5. ALL PLUMBING AND PIPING SYSTEMS SHALL BE SUPPORTED AS REQUIRED BY CODE REQUIREMENTS AND PER MANUFACTURERS RECOMMENDATIONS.
6. ALL PLUMBING FIXTURES SHALL BE INSTALLED IN ACCORDANCE WITH THE MANUFACTURERS WRITTEN INSTRUCTIONS. CONTRACTOR SHALL MAINTAIN ON-SITE THE WRITTEN INSTRUCTIONS FOR THE INSPECTOR'S REVIEW.
7. ALL PIPING PENETRATIONS THROUGH NEW, EXISTING WALL, OR FLOOR SHALL BE SEALED TO EQUAL THE RATING OF THE NEW, EXISTING WALL OR FLOOR.
8. THE NEW PLUMBING SYSTEM SHALL BE TESTED AS REQUIRED BY CODE OR BY THE REQUIREMENTS OF THE LOCAL PLUMBING INSPECTOR.
9. THE ENTIRE DOMESTIC WATER SYSTEM SHALL BE DISINFECTED IN ACCORDANCE WITH THE LOCAL HEALTH DEPARTMENT REQUIREMENTS.
10. ROUTE ALL PIPING CONCEALED ABOVE CEILINGS, WITHIN WALLS OR IN CHASES EXCEPT AS SPECIFICALLY NOTED, OR IN MECHANICAL ROOMS.
11. SEE ARCHITECTURAL DRAWINGS FOR FIXTURE LOCATIONS AND MOUNTING HEIGHTS.
12. CONTRACTOR SHALL PROVIDE AND INSTALL WHEN REQUIRED BY CODE AN AIR GAP SERVING INDIVIDUAL FIXTURES, DEVICES, APPLIANCES OR APPARATUS.
13. CONTRACTOR SHALL PROVIDE WATER STOPS AT EACH FIXTURE.
14. SIZE AND LOCATION OF CLEANOUTS (AS WELL AS ALL PLUMBING WORK) SHALL BE IN ACCORDANCE WITH THE PLUMBING CODE.
15. PATCH ALL SURFACES DISTURBED DURING THE CONSTRUCTION OF PLUMBING COMPONENTS TO MATCH ADJACENT SURFACES. WORK SHALL BE DONE ONLY BY WORKMAN SKILLED IN THE TRADE INVOLVED AND TO THE SATISFACTION OF THE OWNER'S REPRESENTATIVE.
16. ALL CONCEALED VALVES, WATER HAMMER ARRESTORS, CLEANOUTS, ETC., CONCEALED IN WALLS SHALL BE PROVIDED WITH AN ACCESS PANEL SUCH AS ZURN MODEL ZN-1460 OR APPROVED EQUAL.
17. ALL CONCEALED PIPING IN CHASE AREAS SHALL BE SUPPORTED WITH A PIPING SUPPORT SYSTEM SUCH AS SUMNER POSIFIX, STAKFIX AND CHANNEL OR APPROVED EQUAL.
18. PLUMBING WATER SUPPLY PIPING SHALL BE COPPER THROUGHOUT.
19. INSULATE ALL COLD AND HOT WATER PIPING W/ARMAFLEX PIPE INSULATION AS FOLLOWS: 1/2" TO 1-1/4" PIPE – 1/2" THICK INSULATION AND 1-1/2" TO 4" PIPE – 1" THICK INSULATION. SEAL ALL JOINTS AND SEAMS VAPOR TIGHT. INSULATION ID = PIPE OD.
20. LABORATORY PIPING SHALL BE CPVC DRAINAGE TYPE, NSF CERTIFIED FOR CORROSIVE WASTE USE, SPEARS LAB WASTE SYSTEM, OR EQUAL.
21. LABORATORY VENT PIPING SHALL BE CPVC DRAINAGE TYPE, NSF CERTIFIED FOR CORROSIVE WASTE USE, SPEARS LAB WASTE SYSTEM, OR EQUAL.
22. DO NOT ROUTE PLUMBING PIPE OVER OR IN FRONT OF ELECTRICAL PANELS, BREAKERS, ETC.
23. MINIMUM SLOPE OF DRAIN PIPES SHALL BE 1/4" PER FOOT FOR PIPE SIZES EQUAL TO OR LESS THAN 2-1/2" AND 1/8" PER FOOT FOR 3" AND LARGER UNLESS OTHERWISE NOTED.
24. PIPE HANGERS SHALL BE EPOXY COATED AND HANGER RODS ELECTRO-PLATED.
25. PIPING INDICATED AS RISE OR DROP INDICATES PIPING ROUTED WITHIN EXISTING BUILDING STORY. PIPING INDICATED AS DN OR UP INDICATES PIPING ROUTED TO BUILDING STORY BELOW OR ABOVE.
26. SEE SPECIFICATIONS FOR ADDITIONAL REQUIREMENTS.
27. THE SYMBOLS AND ABBREVIATIONS LIST ON THIS SHEET IS A COMPREHENSIVE STANDARD GUIDE INTENDED FOR GENERAL USE ON ALL PROJECTS. THEREFORE NOT ALL THE SYMBOLS AND ABBREVIATIONS CONTAINED IN THIS LIST ARE NECESSARILY USED ON THIS PARTICULAR PROJECT AND SHOULD BE USED FOR CLARIFICATION ONLY.

PIPE MATERIALS ARE SPECIFIED IN SECTIONS 15000, PIPING-GENERAL AND 15410, PLUMBING-PIPING AND PIPE INSULATION SYSTEMS

NO.	DATE	ISSUED FOR	BY
1	07/24/15	REQUEST FOR PROPOSAL	G.A.B.

DESIGNED B.L.S.
DRAWN C.M.S.
CHECKED B.L.S.
PROJ. ENGR. G.A.B.

BERNARD L. STEIGER P.E.
No. 49808

HAZEN AND SAWYER
Environmental Engineers & Scientists
4000 Hollywood Boulevard, Suite 750N
Hollywood, Florida 33021
Certificate of Authorization Number: 2771

SCALE –

CLIENTS PROJECT: –
ENGINEERS PROJECT: 44238-004
CAD REFERENCE: 44238-004BP3-P01

CITY OF NORTH MIAMI
PUBLIC WORKS UTILITIES

WINSON WATER TREATMENT PLANT
RELIABILITY IMPROVEMENTS – VOLUME C: WTP REHAB

PLUMBING SYMBOLS, ABBREVIATIONS, AND NOTES

DATE: JULY 2015
SHEET: 318 OF 335
DRAWING: P-01

REQUEST FOR PROPOSAL

PLOT DATE: 7/24/2015 4:42 PM BY: TBLOCAS
XREFs= ..\Tblock\44238-004-BP3-TB
File = H:\44238-004\Drawings\design build package\volume c - wtp rehab\Bid Package 3 - WTP Rehab\Plumbing\44238-004BP3-P01 Saved by bsteiger Save date = 6/8/2014 6:09 PM

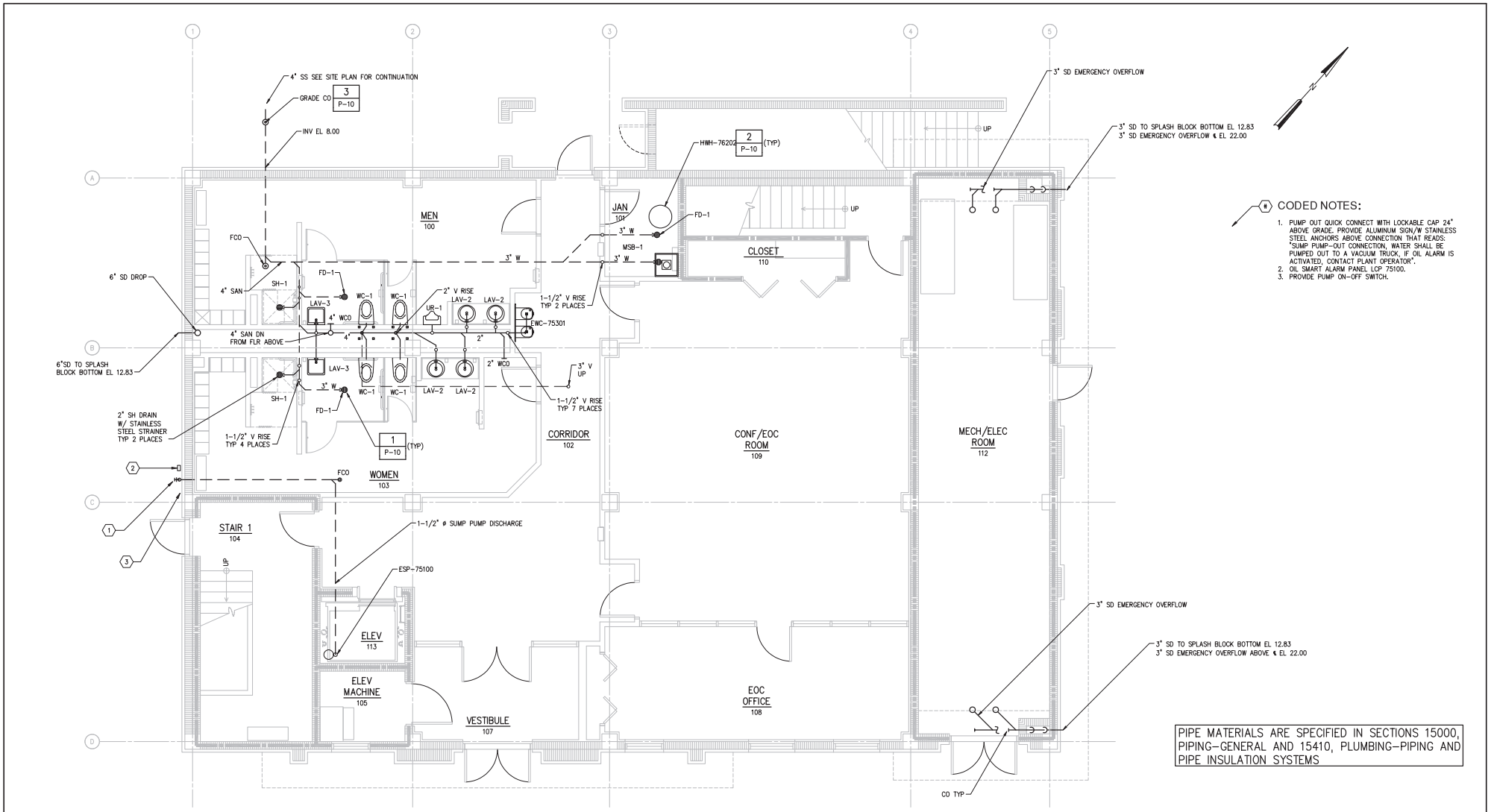

FIRST FLOOR SANITARY PLAN
1/4" = 1'-0"

NO.	DATE	ISSUED FOR	BY
1	07/24/15	REQUEST FOR PROPOSAL	G.A.B.

DESIGNED B.L.S.
DRAWN C.M.S.
CHECKED B.L.S.
PROJ. ENGR. G.A.B.

BERNARD L. STEIGER P.E.
No. 49808

HAZEN AND SAWYER
Environmental Engineers & Scientists
4000 Hollywood Boulevard, Suite 750N
Hollywood, Florida 33021
Certificate of Authorization Number: 2771

SCALE –

CLIENTS PROJECT: –
ENGINEERS PROJECT: 44238-004
CAD REFERENCE: 44238-004BP3-P02

NORTH MIAMI FLORIDA
CITY OF NORTH MIAMI
PUBLIC WORKS UTILITIES

WINSON WATER TREATMENT PLANT
RELIABILITY IMPROVEMENTS – VOLUME C: WTP REHAB
NEW ADMINISTRATION BUILDING
FIRST FLOOR SANITARY PLAN

DATE: JULY 2015
SHEET: 319 OF 335
DRAWING: P-02

REQUEST FOR PROPOSAL

PLOT DATE: 7/24/2015 4:42 PM BY: TBOCAS

XREFs= ..\Tblock\44238-004-BP3-TB,..\Base-BP3\A-BP3-Admin-Plan-Bottom,..\Base-BP3\P-BP3-Admin-Plan-Bottom,..\Base-BP3\A-BP3-Admin-Plan-Col-Grid

File = H:\44238-004\Drawings\design build package\volume c - wtp rehab\Bid Package 3 - WTP Rehab\Plumbing\44238-004BP3-P02 Saved by bsteiger Save date = 6/6/2014 6:09 PM

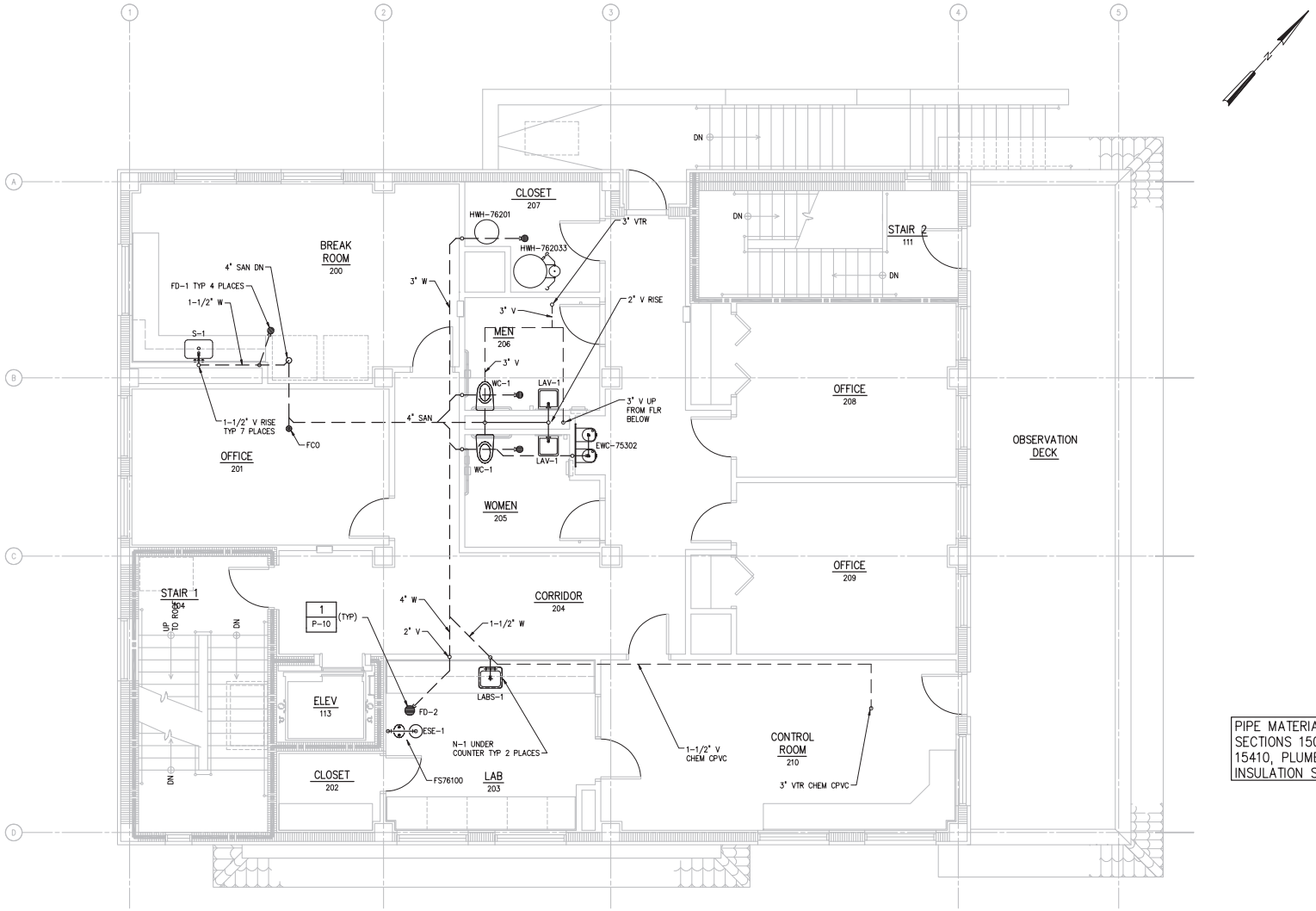

PIPE MATERIALS ARE SPECIFIED IN SECTIONS 15000, PIPING-GENERAL AND 15410, PLUMBING-PIPING AND PIPE INSULATION SYSTEMS

SECOND FLOOR SANITARY PLAN

1/4" = 1'-0"

1/4"=1'-0" 1 0 1 2 3 7'

NO.	DATE	ISSUED FOR	BY
1	07/24/15	REQUEST FOR PROPOSAL	G.A.B.

DESIGNED B.L.S.
DRAWN C.M.S.
CHECKED B.L.S.
PROJ. ENGR. G.A.B.

BERNARD L. STEIGER P.E.
No. 49808

HAZEN AND SAWYER
Environmental Engineers & Scientists
4000 Hollywood Boulevard, Suite 750N
Hollywood, Florida 33021
Certificate of Authorization Number: 2771

SCALE –

CLIENTS PROJECT: –
ENGINEERS PROJECT: 44238-004
CAD REFERENCE: 44238-004BP3-P03

NORTH MIAMI FLORIDA
CITY OF NORTH MIAMI
PUBLIC WORKS UTILITIES

WINSON WATER TREATMENT PLANT
RELIABILITY IMPROVEMENTS – VOLUME C: WTP REHAB
NEW ADMINISTRATION BUILDING
SECOND FLOOR SANITARY PLAN

DATE: JULY 2015
SHEET: 320 OF 335
DRAWING: P-03

REQUEST FOR PROPOSAL

PLOT DATE: 7/24/2015 4:42 PM BY: TBOCAS

XREFs= ..\Tblock\44238-004-BP3-TB,..\Base-BP3\A-BP3-Admin-Plan-Top,..\Base-BP3\P-BP3-Admin-Plan-Top,..\Base-BP3\A-BP3-Admin-Plan-Col-Grid

File = H:\44238-004\Drawings\design build package\volume c - wtp rehab\Bid Package 3 - WTP Rehab\Plumbing\44238-004BP3-P03 Saved by bsteiger Save date = 6/6/2014 6:09 PM

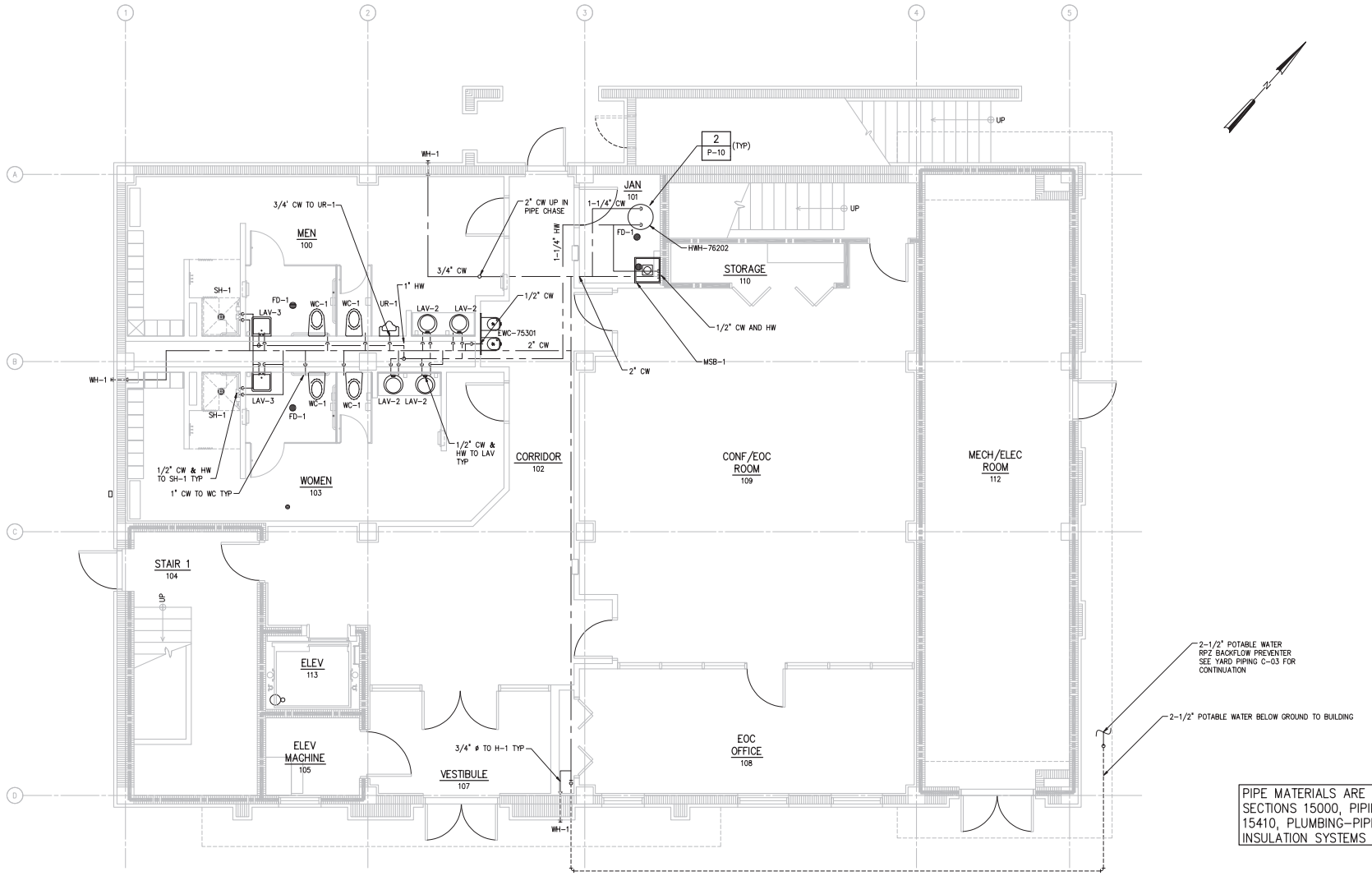

FIRST FLOOR POTABLE WATER PLAN
1/4" = 1'-0"

NO.	DATE	ISSUED FOR	BY
1	07/24/15	REQUEST FOR PROPOSAL	G.A.B.

DESIGNED B.L.S.
DRAWN C.M.S.
CHECKED B.L.S.
PROJ. ENGR. G.A.B.

BERNARD L. STEIGER P.E.
No. 49808

HAZEN AND SAWYER
Environmental Engineers & Scientists
4000 Hollywood Boulevard, Suite 750N
Hollywood, Florida 33021
Certificate of Authorization Number: 2771

SCALE –

CLIENTS PROJECT: –
ENGINEERS PROJECT: 44238-004
CAD REFERENCE: 44238-004BP3-P04

CITY OF NORTH MIAMI
PUBLIC WORKS UTILITIES

WINSON WATER TREATMENT PLANT
RELIABILITY IMPROVEMENTS – VOLUME C: WTP REHAB
NEW ADMINISTRATION BUILDING
FIRST FLOOR POTABLE WATER PLAN

DATE: JULY 2015
SHEET: 321 OF 335
DRAWING: P-04

REQUEST FOR PROPOSAL

PLOT DATE: 7/24/2015 4:42 PM BY: TBOAS

XREFs= ..\Tblock\44238-004-BP3-TB,..\Base-BP3\P-BP3-Admin-Plan-Bottom,..\Base-BP3\A-BP3-Admin-Plan-Bottom,..\Base-BP3\A-BP3-Admin-Plan-Col-Grid

File = H:\44238-004\Drawings\design build package\volume c - wtp rehab\Bid Package 3 - WTP Rehab\Plumbing\44238-004BP3-P04 Saved by Bernard Save date = 6/6/2014 6:09 PM

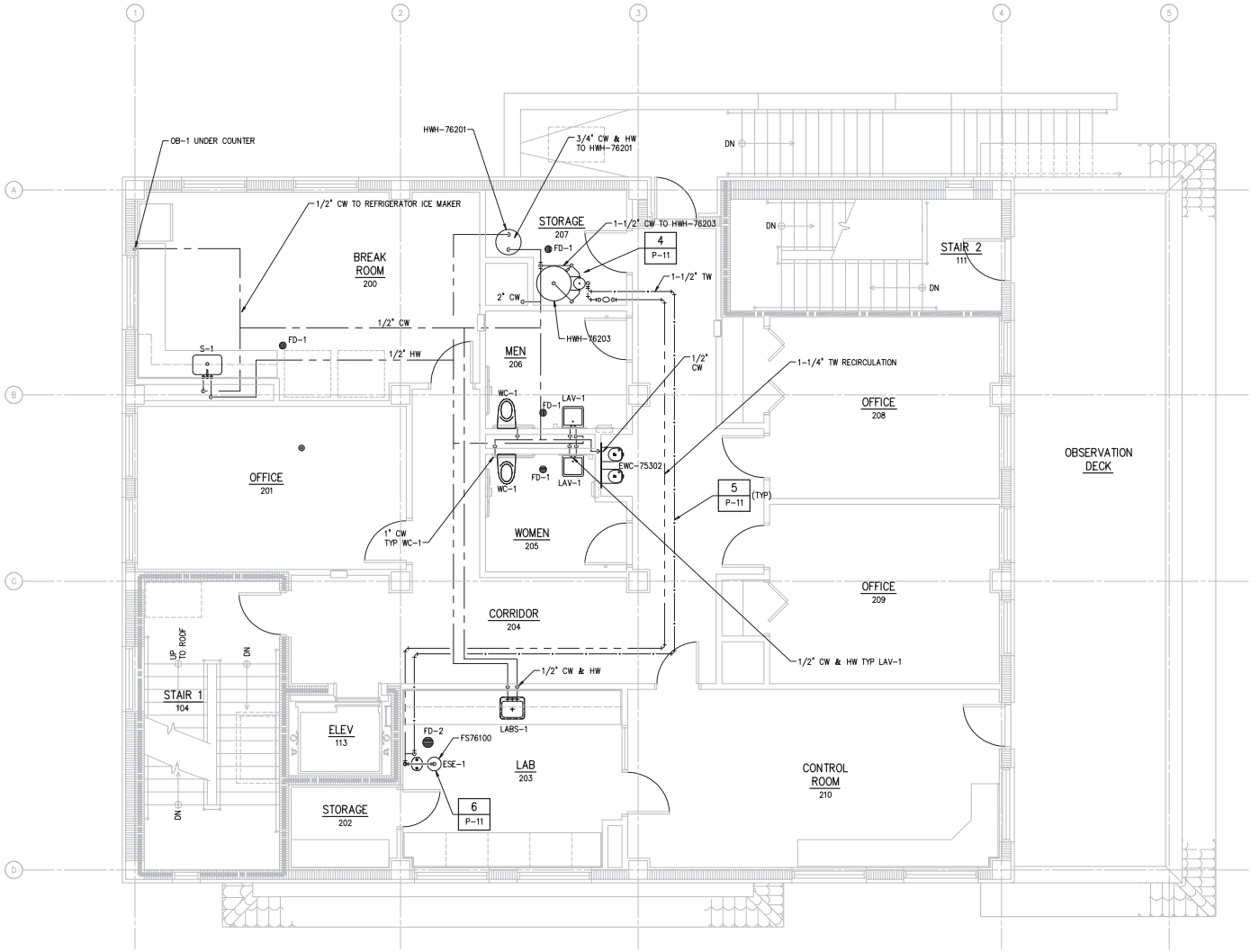

PIPE MATERIALS ARE SPECIFIED IN SECTIONS 15000, PIPING-GENERAL AND 15410, PLUMBING-PIPING AND PIPE INSULATION SYSTEMS

SECOND FLOOR POTABLE WATER PLAN
1/4" = 1'-0"

1/4"=1'-0"

NO.	DATE	ISSUED FOR	BY
1	07/24/15	REQUEST FOR PROPOSAL	G.A.B.

DESIGNED B.L.S.
DRAWN C.M.S.
CHECKED B.L.S.
PROJ. ENGR. G.A.B.

BERNARD L. STEIGER P.E.
No. 49808

HAZEN AND SAWYER
Environmental Engineers & Scientists
4000 Hollywood Boulevard, Suite 750N
Hollywood, Florida 33021
Certificate of Authorization Number: 2771

SCALE –

CLIENTS PROJECT: –
ENGINEERS PROJECT: 44238-004
CAD REFERENCE: 44238-004BP3-P05

CITY OF NORTH MIAMI
PUBLIC WORKS UTILITIES

WINSON WATER TREATMENT PLANT
RELIABILITY IMPROVEMENTS – VOLUME C: WTP REHAB
NEW ADMINISTRATION BUILDING
SECOND FLOOR POTABLE WATER PLAN

DATE: JULY 2015
SHEET: 322 OF 335
DRAWING: P-05

REQUEST FOR PROPOSAL

PLOT DATE: 7/24/2015 4:42 PM BY: TBOCAS

XREFs= ..\Tblock\44238-004-BP3-TB,..\Base-BP3\P-BP3-Admin-Plan-Top,..\Base-BP3\A-BP3-Admin-Plan-Top,..\Base-BP3\A-BP3-Admin-Plan-Col-Grid

File = H:\44238-004\Drawings\design build package\volume c - wtp rehab\Bid Package 3 - WTP Rehab\Plumbing\44238-004BP3-P05 Saved by Bernard Save date = 6/6/2014 6:09 PM

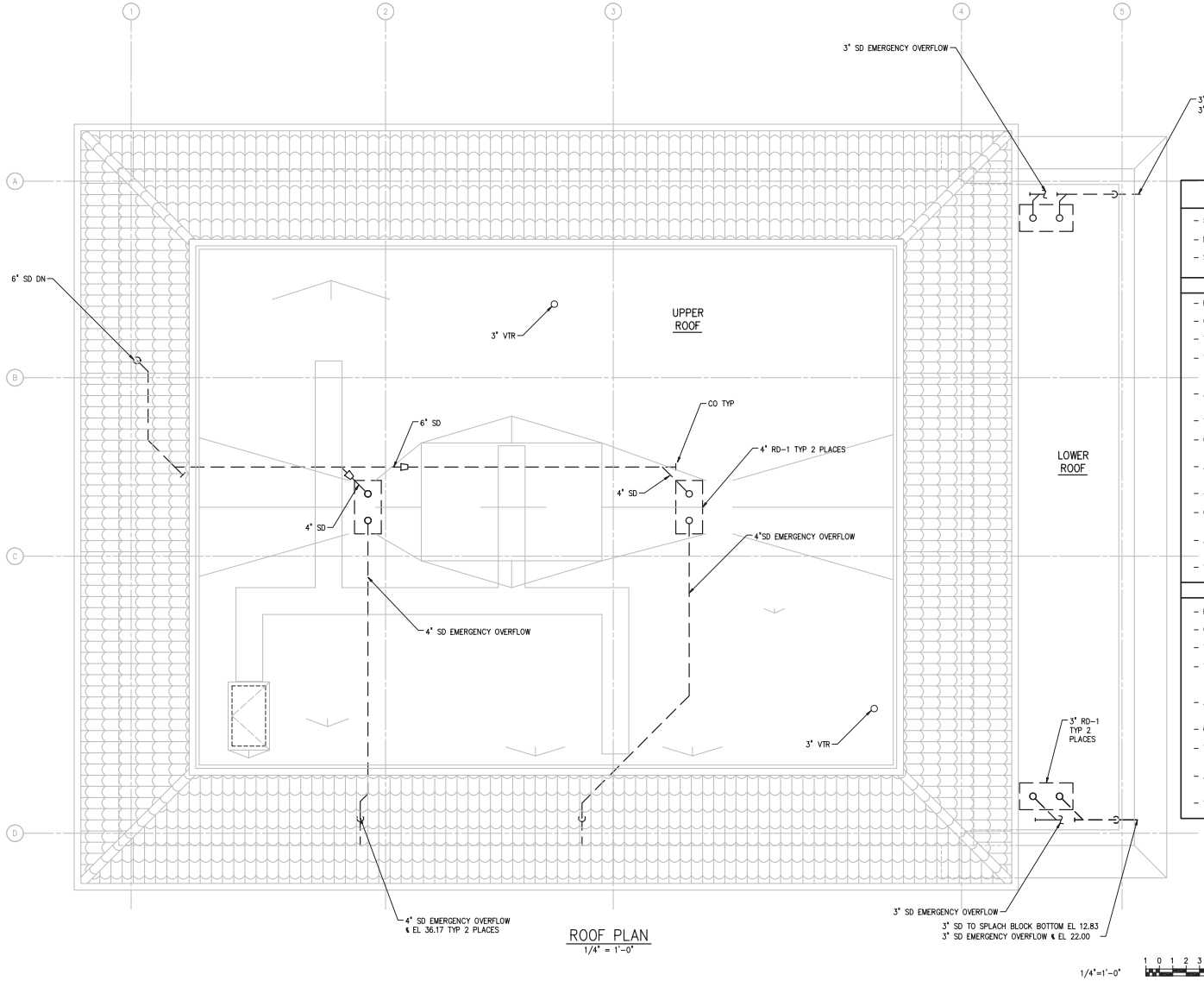

ROOF PLAN
1/4" = 1'-0"

ROOF DRAINAGE CALCULATION

- 5-INCH/HOUR DESIGN RAINFALL RATE
- MINIMUM DRAIN SLOPE = 1/8" PER FOOT
- SECONDARY ROOF DRAIN SYSTEM NEEDED PER SECTION 1107.1 (2010 FPC)

UPPER ROOF:

- HORIZONTAL ROOF AREA = 2,041 SQUARE FEET
- ONE HALF OF VERTICAL WALL AREA = 548 SQUARE FEET
- TOTAL DESIGN PROJECTED ROOF AREA = 2,589 SQUARE FEET
- TWO 4" DIAMETER HORIZONTAL STORM DRAINS AND TWO 4" DIAMETER HORIZONTAL OVERFLOW DRAINS, AREA PER DRAIN = 1,295 SQUARE FEET
- AREA ALLOWED PER 2010 FPC TABLE 1106.3 = 1,504 SQUARE FEET
- 1,504 SQUARE FEET > 1,295 SQUARE FEET, PROPOSED SIZE OK
- ONE COMBINED 6" DIAMETER HORIZONTAL STORM DRAIN, AREA = 2,589 SQUARE FEET
- AREA ALLOWED PER 2010 FPC TABLE 1106.3 = 4,280 SQUARE FEET
- 4,280 SQUARE FEET > 2,589 SQUARE FEET, PROPOSED SIZE OK
- ONE COMBINED 6" DIAMETER VERTICAL STORM DRAIN, AREA = 2,589 SQUARE FEET
- AREA ALLOWED PER 2010 FPC TABLE 1106.2(1) = 10,800 SQUARE FEET
- 10,800 SQUARE FEET > 2,589 SQUARE FEET, PROPOSED SIZE OK

LOWER ROOF:

- HORIZONTAL ROOF AREA = 517 SQUARE FEET
- ONE HALF OF VERTICAL WALL AREA = 478 SQUARE FEET
- TOTAL DESIGN PROJECTED ROOF AREA = 995 SQUARE FEET
- TWO 3" DIAMETER HORIZONTAL STORM DRAINS AND TWO 3" DIAMETER HORIZONTAL OVERFLOW DRAINS, AREA PER DRAIN = 498 SQUARE FEET
- AREA ALLOWED PER 2010 FPC TABLE 1106.3 = 657 SQUARE FEET
- 657 SQUARE FEET > 498 SQUARE FEET, PROPOSED SIZE OK
- TWO 3" DIAMETER VERTICAL STORM DRAINS, AREA PER DRAIN = 498 SQUARE FEET
- AREA ALLOWED PER 2010 FPC TABLE 1106.2(1) = 1,760 SQUARE FEET
- 1,760 SQUARE FEET > 498 SQUARE FEET, PROPOSED SIZE OK

PIPE MATERIALS ARE SPECIFIED IN SECTIONS 15000, PIPING-GENERAL AND 15410, PLUMBING-PIPING AND PIPE INSULATION SYSTEMS

NO.	DATE	ISSUED FOR	BY
1	07/24/15	REQUEST FOR PROPOSAL	G.A.B.

DESIGNED B.L.S.
DRAWN C.M.S.
CHECKED B.L.S.
PROJ. ENGR. G.A.B.

BERNARD L. STEIGER P.E.
No. 49808

HAZEN AND SAWYER
Environmental Engineers & Scientists
4000 Hollywood Boulevard, Suite 750N
Hollywood, Florida 33021
Certificate of Authorization Number: 2771

SCALE –

CLIENTS PROJECT: –
ENGINEERS PROJECT: 44238-004
CAD REFERENCE: 44238-004BP3-P06

NORTH MIAMI FLORIDA
CITY OF NORTH MIAMI
PUBLIC WORKS UTILITIES

WINSON WATER TREATMENT PLANT
RELIABILITY IMPROVEMENTS – VOLUME C: WTP REHAB

NEW ADMINISTRATION BUILDING
ROOF DRAINAGE PLAN

DATE: JULY 2015
SHEET: 323 OF 335
DRAWING: P-06

REQUEST FOR PROPOSAL

PLOT DATE: 7/24/2015 4:42 PM BY: TBOCAS

XREFs= ..\Tblock\44238-004-BP3-TB,..\Base-BP3\P-BP3-Admin-Plan-Roof,..\Base-BP3\A-BP3-Admin-Plan-Roof,..\Base-BP3\A-BP3-Admin-Plan-Col-Grid,..\Base-BP3\H-BP3-Admin-Plan-Roof

File = H:\44238-004\Drawings\design build package\volume c - wtp rehab\Bid Package 3 - WTP Rehab\Plumbing\44238-004BP3-P06 Saved by tbocas Save date = 5/18/2015 11:22 AM

SANITARY DRAINAGE CALCULATIONS			
ITEM	QUANTITY	DFU	TOTAL DFU
FIRST FLOOR			
WC	4	4	16
UR	1	2	2
LAV	6	1	6
EWC	2	0.5	1
MSB	1	2	2
FD	3	2	6
SH	2	2	4
S	0	2	0
FIRST FLOOR TOTAL			37
SECOND FLOOR			
WC	2	4	8
UR	0	2	0
LAV	2	1	2
EWC	2	0.5	1
MSB	0	2	0
FD	5	2	10
ESE	1	20	20
S	3	2	6
SECOND FLOOR TOTAL			47
TOTAL BUILDING			84

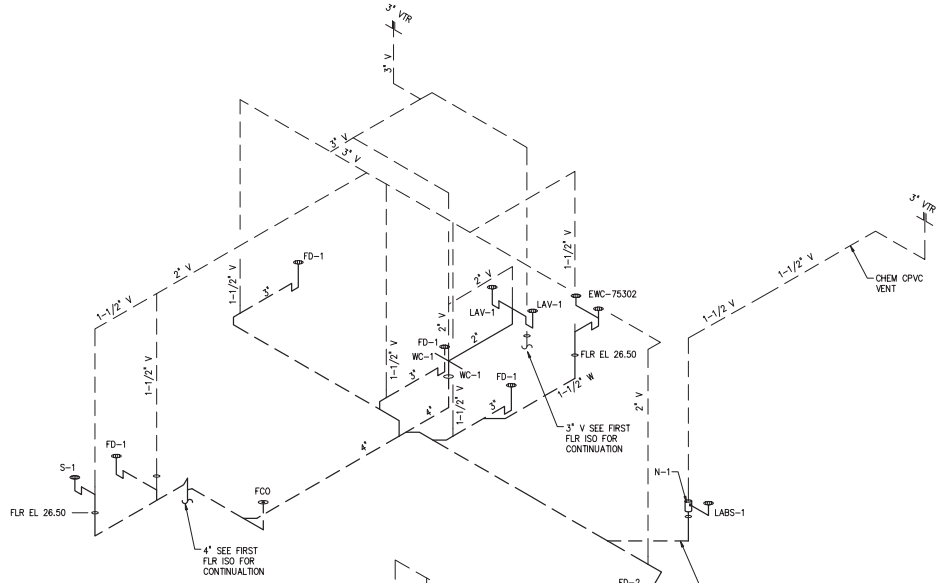

SECOND FLOOR SANITARY ISOMETRIC

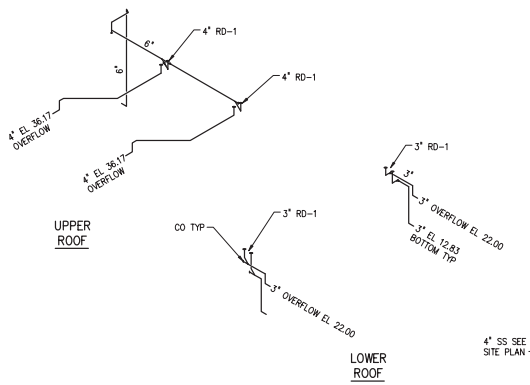

STORM DRAIN ISOMETRIC

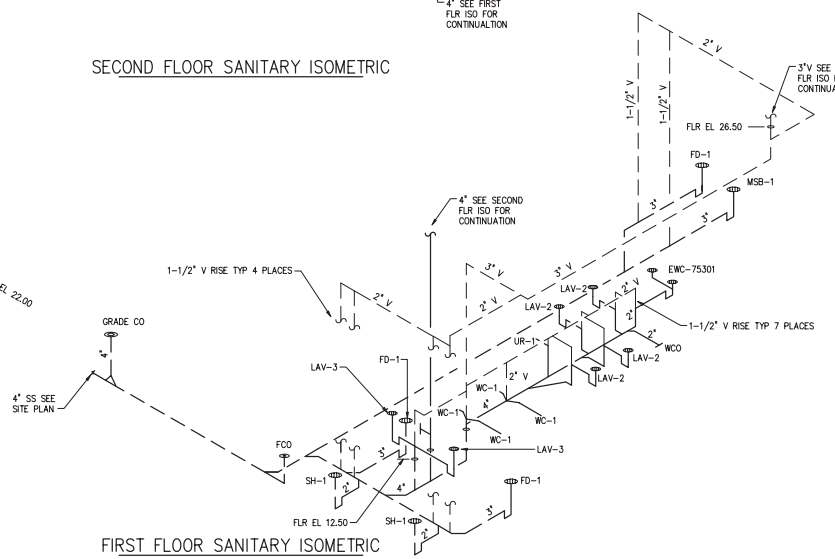

FIRST FLOOR SANITARY ISOMETRIC

PIPE MATERIALS ARE SPECIFIED IN SECTIONS 15000, PIPING-GENERAL AND 15410, PLUMBING-PIPING AND PIPE INSULATION SYSTEMS

NO.	DATE	ISSUED FOR	BY
1	07/24/15	REQUEST FOR PROPOSAL	G.A.B.

DESIGNED B.L.S.
DRAWN C.M.S.
CHECKED B.L.S.
PROJ. ENGR. G.A.B.

BERNARD L. STEIGER P.E.
No. 49808

HAZEN AND SAWYER
Environmental Engineers & Scientists
4000 Hollywood Boulevard, Suite 750N
Hollywood, Florida 33021
Certificate of Authorization Number: 2771

SCALE –

CLIENTS PROJECT: –
ENGINEERS PROJECT: 44238-004
CAD REFERENCE: 44238-004BP3-P07

NORTH MIAMI FLORIDA
CITY OF NORTH MIAMI
PUBLIC WORKS UTILITIES

WINSON WATER TREATMENT PLANT
RELIABILITY IMPROVEMENTS – VOLUME C: WTP REHAB
NEW ADMINISTRATION BUILDING
SANITARY ISOMETRIC

DATE: JULY 2015
SHEET: 324 OF 335
DRAWING: P-07

REQUEST FOR PROPOSAL

PLOT DATE: 7/24/2015 4:42 PM BY: TBOCAS
XREFs= ..\Tblock\44238-004-BP3-TB
File = H:\44238-004\Drawings\design build package\volume c - wtp rehab\Bid Package 3 - WTP Rehab\Plumbing\44238-0048P3-P07 Saved by bsteiger Save date = 6/6/2014 6:09 PM

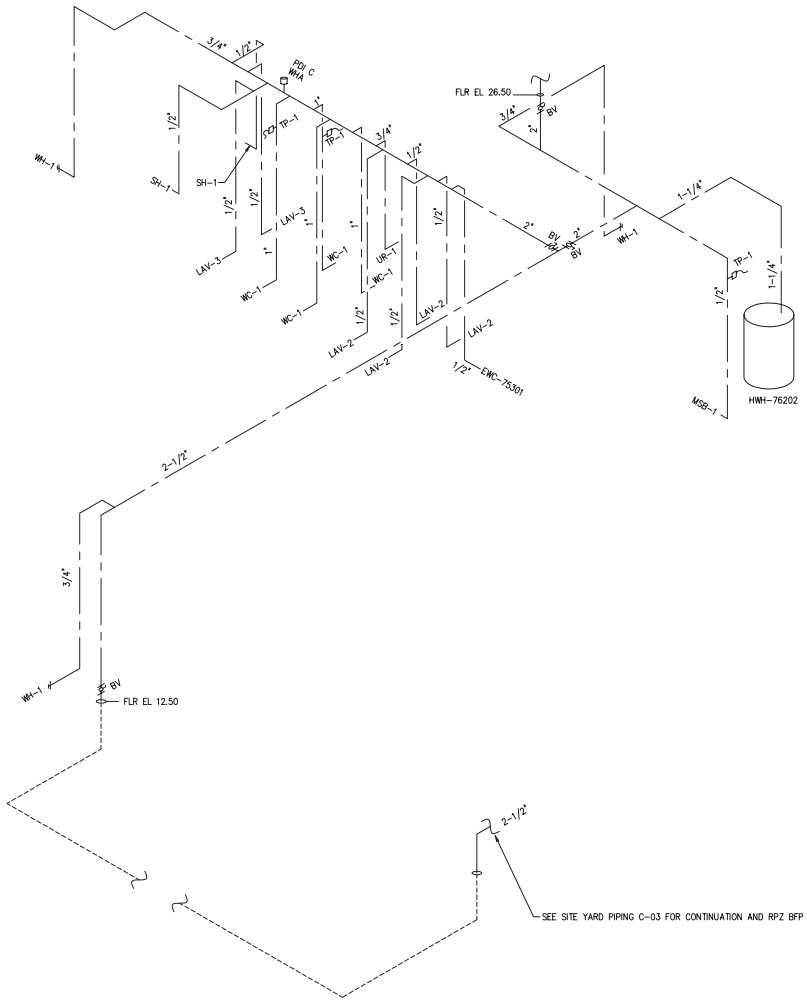

FIRST FLOOR CW ISOMETRIC

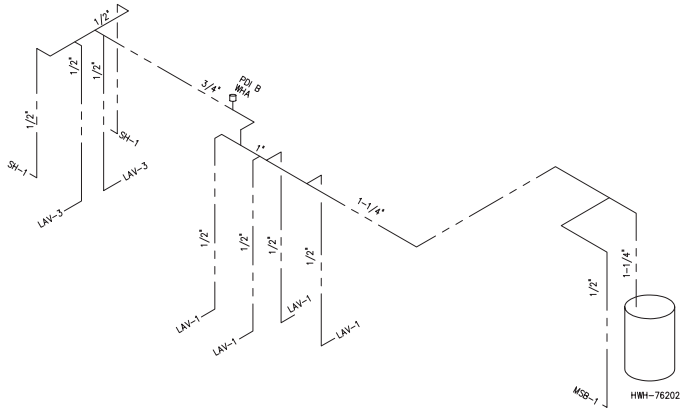

FIRST FLOOR HW ISOMETRIC

WATER CALCULATIONS			
ITEM	QUANTITY	WSFU	TOTAL WSFU
FIRST FLOOR			
WC	4	10	40
UR	1	5	5
LAV	6	2	12
EWC	2	0.25	0.5
MSB	1	3	3
FD	2	0	0
SH	2	4	8
S	0	4	0
FIRST FLOOR TOTAL			68.5
SECOND FLOOR			
WC	2	10	20
UR	0	5	0
LAV	2	2	4
EWC	2	0.25	0.5
MSB	0	3	0
FD	5	0	0
ESE	1	20	20
S	2	4	8
SECOND FLOOR TOTAL			52.5
TOTAL BUILDING			121

PIPE MATERIALS ARE SPECIFIED IN SECTIONS 15000, PIPING–GENERAL AND 15410, PLUMBING–PIPING AND PIPE INSULATION SYSTEMS

REQUEST FOR PROPOSAL

NO.	DATE	ISSUED FOR	BY
1	07/24/15	REQUEST FOR PROPOSAL	G.A.B.

DESIGNED B.L.S.
DRAWN C.M.S.
CHECKED B.L.S.
PROJ. ENGR. G.A.B.

BERNARD L. STEIGER P.E.
No. 49808

HAZEN AND SAWYER
Environmental Engineers & Scientists
4000 Hollywood Boulevard, Suite 750N
Hollywood, Florida 33021
Certificate of Authorization Number: 2771

SCALE –

CLIENTS PROJECT: –
ENGINEERS PROJECT: 44238–004
CAD REFERENCE: 44238–004BP3–P08

NORTH MIAMI FLORIDA
CITY OF NORTH MIAMI
PUBLIC WORKS UTILITIES

WINSON WATER TREATMENT PLANT
RELIABILITY IMPROVEMENTS – VOLUME C: WTP REHAB

NEW ADMINISTRATION BUILDING FIRST FLOOR POTABLE WATER ISOMETRIC

DATE: JULY 2015
SHEET: 325 OF 335
DRAWING: P–08

PLOT DATE: 7/24/2015 4:42 PM BY: TBDOAS
XREFs= ..\Tblock\44238–004–BP3–TB
File = H:\44238–004\Drawings\design build package\volume c – wtp rehab\Bid Package 3 – WTP Rehab\Plumbing\44238–004BP3–P08 Saved by bsteiger Save date = 6/6/2014 6:09 PM

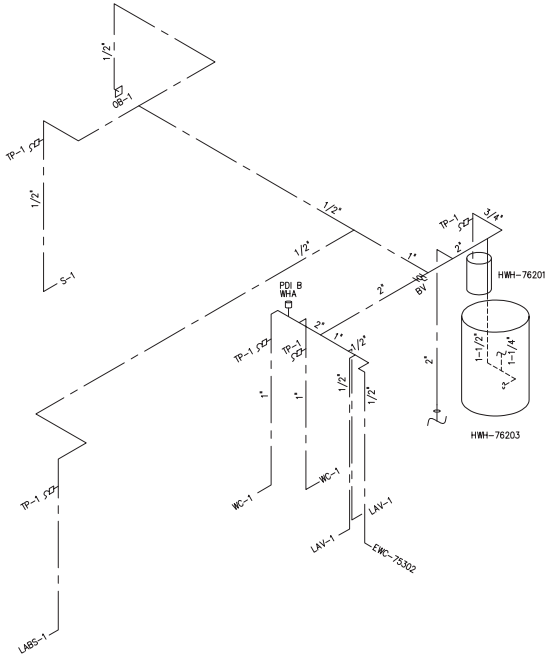

SECOND FLOOR CW ISOMETRIC

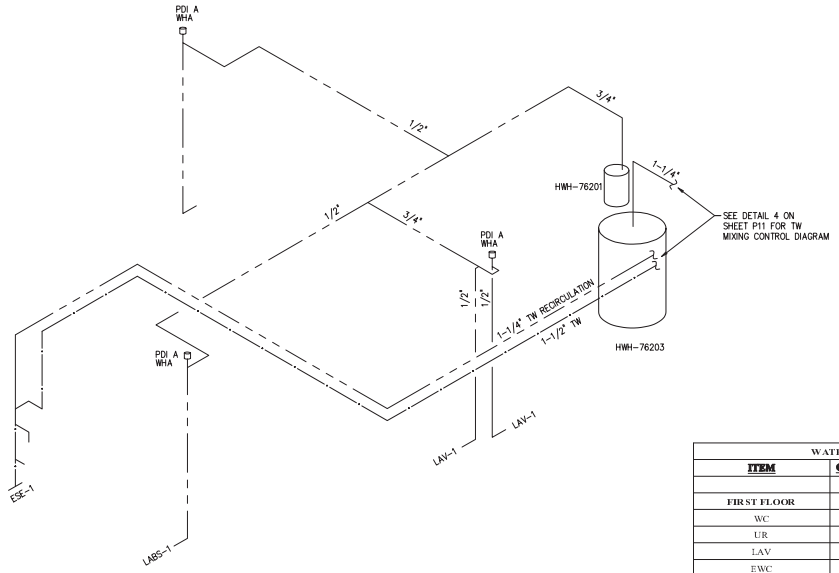

SECOND FLOOR HW ISOMETRIC

WATER CALCULATIONS			
ITEM	QUANTITY	WSFU	TOTAL WSFU
FIRST FLOOR			
WC	4	10	40
UR	1	5	5
LAV	4	2	8
EWC	2	0.25	0.5
MSB	1	3	3
FD	2	0	0
SH	2	4	8
S	0	4	0
FIRST FLOOR TOTAL			64.5
SECOND FLOOR			
WC	2	10	20
UR	0	5	0
LAV	2	2	4
EWC	2	0.25	0.5
MSB	0	3	0
FD	5	0	0
ESE	1	20	20
S	2	4	8
SECOND FLOOR TOTAL			52.5
TOTAL BUILDING			117

PIPE MATERIALS ARE SPECIFIED IN SECTIONS 15000, PIPING-GENERAL AND 15410, PLUMBING-PIPING AND PIPE INSULATION SYSTEMS

REQUEST FOR PROPOSAL

PLOT DATE: 7/24/2015 4:42 PM BY: TBOCAS

NO.	DATE	ISSUED FOR	BY
1	07/24/15	REQUEST FOR PROPOSAL	G.A.B.

DESIGNED B.L.S.
DRAWN C.M.S.
CHECKED B.L.S.
PROJ. ENGR. G.A.B.

BERNARD L. STEIGER P.E.
No. 49808

HAZEN AND SAWYER
Environmental Engineers & Scientists
4000 Hollywood Boulevard, Suite 750N
Hollywood, Florida 33021
Certificate of Authorization Number: 2771

SCALE –

CLIENTS PROJECT: –
ENGINEERS PROJECT: 44238-004
CAD REFERENCE: 44238-004BP3-P09

CITY OF NORTH MIAMI
PUBLIC WORKS UTILITIES

WINSON WATER TREATMENT PLANT
RELIABILITY IMPROVEMENTS – VOLUME C: WTP REHAB
NEW ADMINISTRATION BUILDING
SECOND FLOOR POTABLE WATER
ISOMETRIC

DATE: JULY 2015
SHEET: 326 OF 335
DRAWING: P-09

XREFs= ..\Tblock\44238-004-BP3-TB

File = H:\44238-004\Drawings\design build package\volume c - wtp rehab\Bid Package 3 - WTP Rehab\Plumbing\44238-004BP3-P09 Saved by bsteiger Save date = 6/6/2014 6:09 PM

PLUMBING FIXTURE ROUGH-IN SCHEDULE

FIXTURE TAG	FIXTURE TYPE	CW (PIPE SIZE)	HW (PIPE SIZE)	WASTE (PIPE SIZE)	VENT (PIPE SIZE)	MANUFACTURER	MODEL	GALLONS PER FLUSH/MIN	FAUCET/FLUSH VALVE MANUFACTURER	FAUCET/VALVE MODEL	REMARKS
WC-1	FLUSH VALVE WATER CLOSET	1"	–	4"	2"	AMERICAN STANDARD	3351.660	1.6/1.0	SLOAN	8111-1.6/1.1	1, 2, 3
UR-1	FLUSH VALVE URINAL	3/4"	–	2"	1 1/2"	AMERICAN STANDARD	6590.125	0.125	SLOAN	8186 HEU	3
LAV-1	WALL HUNG LAV	1/2"	1/2"	1 1/2"	1 1/2"	AMERICAN STANDARD	0124.131	0.5	AMERICAN STANDARD	6055.205	4, 5, 6, 19, 20
LAV-2	COUNTER TOP LAV	1/2"	1/2"	1 1/2"	1 1/2"	AMERICAN STANDARD	0405.004EC	0.5	AMERICAN STANDARD	6055.205	4, 5, 6, 19
MSB-1	FLOOR MOUNTED MOP SINK	1/2"	1/2"	3"	1 1/2"	MUSTEE	63M	1.5	CHICAGO	897-CP	7
SH-1	SHOWER HEAD AND MIXING VALVE	1/2"	1/2"	2"	1 1/2"	SYMMONS	96-500-B30-L-V	1.5	SYMMONS	4-295	8
S-1	SINGLE COMPARTMENT SINK	1/2"	1/2"	1 1/2"	1 1/2"	JUST	SL-1921-A-GR	0.5	MOEN	8701	9
N-1	LAB DRAIN TANK NEUTRALIZATION	–	–	1 1/2"	1 1/2"	ORION	STYLE 10	–	–	–	–
FD-1	FLOOR DRAIN ADJUSTABLE TOP	–	–	3" OR 4"	2"	ZURN	Z415BZ-AA-Y-P	–	–	–	10, 12
FD-2	CHEM RESISTANT FLOOR DRAIN	–	–	4"	2"	ZURN	Z550-AR-VP-Y	–	–	–	11, 12
TP-1	TRAP PRIMER	1/2"	–	–	–	ZURN	Z1022	–	–	–	–
WH-1	WALL HYDRANT	3/4"	–	–	–	ZURN	Z1321	–	–	–	NON-FREEZE
RD-1	ROOF DRAIN	–	–	4"	–	JOSAM	22504	–	–	–	18
EWC-75301 & 2	DUAL HEIGHT WATER COOLER	1/2"	–	1 1/2"	1 1/2"	ELKAY	EZOSTL8C	0.2	–	–	13
LABS-1	LAB SINK SERVICE CONNECTIONS	1/2"	1/2"	1 1/2"	1 1/2"	–	–	–	–	–	14
ESE-1	EMERGENCY SHOWER/EYEWASH	1 1/4"	–	–	–	HAWS	8317	20	–	–	16
ESP-75100	ELEVATOR SUMP PUMP	–	–	1-1/2	–	BARNES	SERIES SP50	58	–	–	17
OB-1	OUTLET BOX	1/2	–	–	–	OATEY	39145	0.2	–	–	–
FCO	FLOOR CLEAN OUT	–	–	–	–	ZURN	Z1400BZZNARBP	–	–	–	–
WCO	WALL CLEAN OUT	–	–	–	–	ZURN	Z1441ZBP	–	–	–	–
LAV-3	ADA WALL HUNG	1/2"	1/2"	1-1/2"	1-1/2"	AMERICAN STANDARD	9140.047	0.5	AMERICAN STANDARD	6055.165	4, 5 ,19, 20

REMARKS
1. FURNISH COMPLETE WITH OPEN FRONT SEAT. INSTALL W/CARRIER AT ADA MANDATED HEIGHT FROM FLOOR TO SEAT FOR ALL TYPES DESIGNATED AS "ACCESSIBLE" ON ARCHITECTURAL PLANS.
2. DUAL FLUSH OPERATION (1.6 GALLONS PER FLUSH HIGH FLOW/ 1.1 GALLONS PER FLUSH LOW FLOW)-LEED RELATED.
3. DC POWERED FLUSH VALVE WITH MANUAL OVER-RIDE, LONG-LIFE BATTERY OPERATED WITH PROXIMITY SENSOR AUTO FLUSH.
4. ADA PROTECTIVE INSULATION COVERS (TRUEBRO LAVGUARD) ON SUPPLIES AND WASTE FOR ALL LAVS DESIGNATED AS "ACCESSIBLE" ON ARCHITECTURAL PLANS.
5. REVISE TO MODEL 6057.205 MODEL WHEN MULTIPLE LAVS CONNECTED IN SERIES. PROVIDE ASSE 1016 RATED UNDER COUNTER MIXING VALVE (AMERICAN STANDARD 605XTMV).
6. 4" CENTERSET FAUCET WITH TOUCHLESS AUTO PROXIMITY SENSOR.
7. SPOUT TO INCLUDE INTEGRAL VACUUM BREAKER. PROVIDE HOSE AND HOSE HOLDER, MOP HANGER, BUMPER GUARDS AND DURAGUARD WALL GUARDS.
8. SUBSTITUTE STANDARD T-300-V HAND SHOWER WAND WITH MODEL EF-100 AND PROVIDE 1.5 GPM FLOW RESTRICTOR.
9. SINGLE HOLE PUNCHED.
10. NICKEL BRONZE ROUND TOP WITH SEDIMENT BUCKET AND VANDAL RESISTANT SCREWS.
11. ACID RESISTING ENAMEL COATING ON INTERIOR DRAIN BODY, SEDIMENT BUCKET AND GRATED TOP.
12. PROVIDE 1/2" TRAP PRIMER CONNECTION FOR ALL RESTROOMS, MECHANICAL ROOMS AND LAB ROOMS. FURNISHED BY LAB CASEWORK EQUIPMENT VENDOR.
13. DUAL STATION ADA COMPLIANT BARRIER FREE WATER COOLER, HFC-134A REFRIGERANT, 9.7 GPH OF 50 DEG WATER AT 70 DEG AMBIENT ROOM TEMPERATURE.
14. FURNISHED BY LAB CABINET VENDOR.
15. NOT USED.
16. CHROME PLATED BRASS IN-LINE 50 X 50 MESH WATER STRAINER.
17. CODE REQUIREMENT ASME 17.1 WITH OIL ALARM SYSTEM. PUMP RATED FOR 58 GPM AT 10 HEAD FEET, 1/2 HP, 120V, 1PH, 3450 RPM MOTOR. PROVIDE SEE WATER, OIL SMART MODEL #OSS-100 CONTROLLER. SEE SPECIFICATION 11208.
18. SEE ARCHITECTURAL DRAWINGS FOR LOCATION OF ROOF DRAINS.
19. PROFLOW 17 GUAGE CHROME P-TRAP W/CO AND 17 GAUGE CHROME GRID DRAIN.
20. FURNISH COMPLETE WITH CARRIER.

PLUMBING WATER HEATER SCHEDULE

MARK	MANUFACTURER	MODEL	TYPE	CW (PIPE SIZE)	HW (PIPE SIZE)	INPUT (KW OR CFH GAS)	THERMAL EFFICIENCY	FLUE (PIPE SIZE)	RECOVERY RATE @ 85 DEG RISE (GPH)	STORAGE (GALLONS)	ELECTRICAL VOLTS/PHASE/HZ	REMARKS
HWH-76201	AO SMITH	DEL20	ELEC	3/4"	3/4"	2.5 KW	100%	–	12	20	208/1/60	1, 2, 3, 4, 5, 7
HWH-76202	AO SMITH	DEN66	ELEC	3/4"	3/4"	6.0 KW	100%	–	28	66	208/1/60	1, 2, 3, 4, 5, 7
HWH-76203	HUBBELL	EMV-120	ELEC	1 1/2"	1 1/2"	6.0 KW	100%	–	24	120	208/1/60	1, 2, 4, 5, 6

REMARKS
1. ALL WATER HEATERS SHALL MEET OR EXCEED STANDBY LOSS REQUIREMENTS PER US DEPARTMENT OF ENERGY AND ASHRAE 90.1-2007.
2. RATED FOR 150 PSIG WORKING PRESSURE.
3. PROVIDE EXTRUDED HIGH DENSITY ANODE ROD.
4. PROVIDE ASME RATED TEMPERATURE AND PRESSURE RELEIF VALVE SIZED FOR HEATER COPPER DRAIN LINE PIPED TO WITHIN 6" OF FLOOR.
5. INSTALL DIELECTRIC UNIONS AND SHUT-OFF ISOLATION VALVES AT EACH WATER CONNECTION.
6. OSHA 29 CFR 1910.151 AND ANSI Z358.1.
7. PROVIDE CAMCO DIELECTRIC HEAT TRAP ON COLD AND HOT WATER CONNECTIONS.

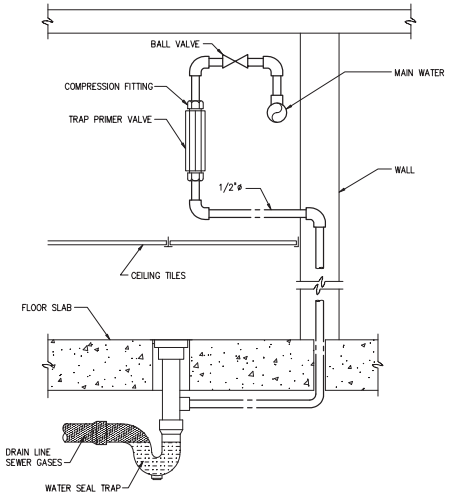

TRAP PRIMER

DETAIL 1 / –
N.T.S.

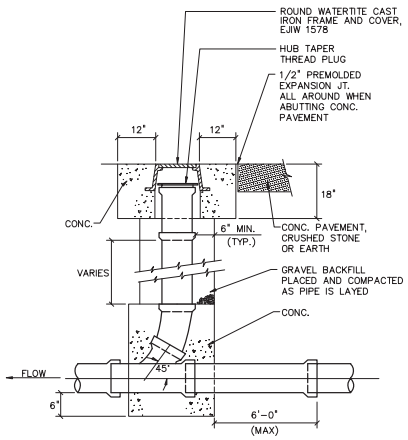

GRADE CLEAN OUT

DETAIL 3 / –
N.T.S.

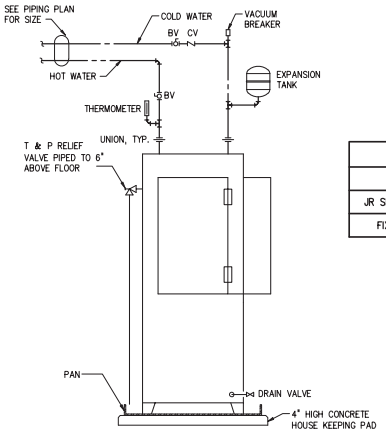

ELECTRIC WATER HEATER

DETAIL 2 / –
N.T.S.

WATER HAMMER ARRESTERS (WHA) SCHEDULE

PDI SYMBOLS	A	B	C	D	E	F
JR SMITH HYDROTROL WHA	5005	5010	5020	5030	5040	5050
FIXTURE UNIT RATING	1-11	12-32	33-60	61-113	114-154	155-330

PIPE MATERIALS ARE SPECIFIED IN SECTIONS 15000, PIPING-GENERAL AND 15410, PLUMBING-PIPING AND PIPE INSULATION SYSTEMS

NO.	DATE	ISSUED FOR	BY
1	07/24/15	REQUEST FOR PROPOSAL	G.A.B.

DESIGNED B.L.S.
DRAWN C.M.S.
CHECKED B.L.S.
PROJ. ENGR. G.A.B.

BERNARD L. STEIGER P.E.
No. 49808

HAZEN AND SAWYER
Environmental Engineers & Scientists
4000 Hollywood Boulevard, Suite 750N
Hollywood, Florida 33021
Certificate of Authorization Number: 2771

SCALE –

CLIENTS PROJECT: –
ENGINEERS PROJECT: 44238-004
CAD REFERENCE: 44238-004BP3-P10

NORTH MIAMI FLORIDA
CITY OF NORTH MIAMI
PUBLIC WORKS UTILITIES

WINSON WATER TREATMENT PLANT
RELIABILITY IMPROVEMENTS – VOLUME C: WTP REHAB

PLUMBING DETAILS
SHEET 1

DATE: JULY 2015
SHEET: 327 OF 335
DRAWING: P-10

REQUEST FOR PROPOSAL

PLOT DATE: 7/24/2015 4:42 PM BY: TBLOAS
XREFs= ..\Tblock\44238-004-BP3-TB
File = H:\44238-004\Drawings\design build package\volume c - wtp rehab\Bid Package 3 - WTP Rehab\Plumbing\44238-004BP3-P10 Saved by bsteiger Save date = 6/6/2014 6:09 PM

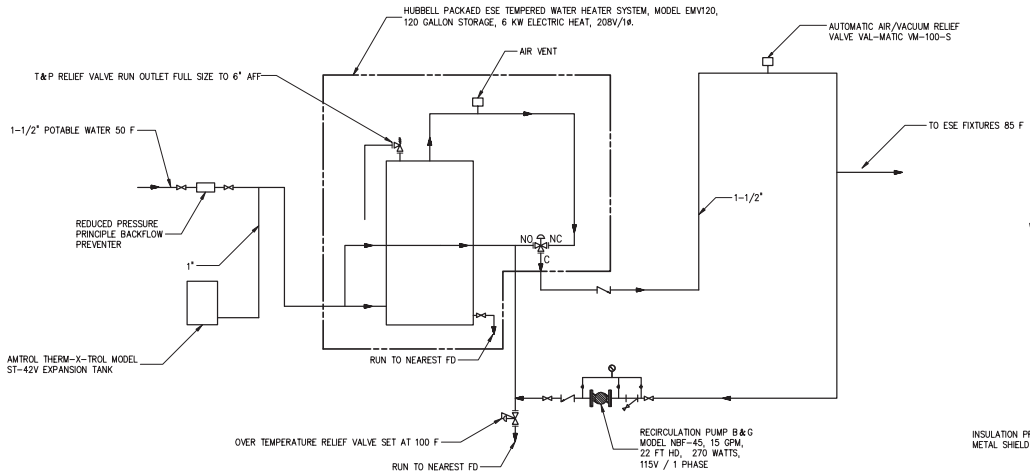

ESE TEMPERED WATER SYSTEM

DETAIL 4
NO SCALE –

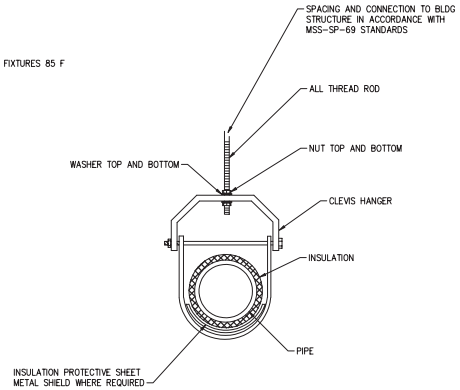

PIPE HANGER SUPPORT

DETAIL 5
NO SCALE –

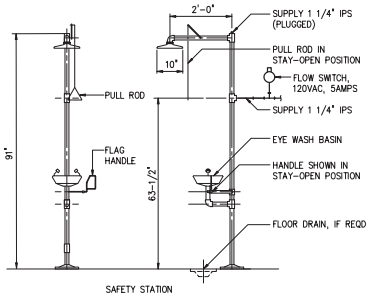

ESE NOTES:

1. PROVIDE HAWS 8317 (INTERIOR) ESE WITH SCALD PROTECTION BLEED VALVE.
2. TEMPERED WATER HEATING AND MIXING CONTROL SYSTEM – REFERENCE DETAIL 4.
3. EA-HAWS MODEL 9001 EMERGENCY ALARM AND LIGHT SYSTEM SHALL INCLUDE AN AMBER FLASHING LIGHT, AND 90 DB BUZZER AT 10 FEET THAT IS OPERATED BY A 1-1/4" NPT DOUBLE POLE, DOUBLE THROW FLOW SWITCH WHICH CONTAINS MULTIPLE SETS OF CONTACTS FOR REMOTE ACTIVATION AND PIPE BRACKET. SWITCH SHALL ACTIVATE AT 1.5 GPM. VOLTAGE: 120 VAC, 60 CYCLES, NEMA 4.
4. PROVIDE SHOWER TEST KIT AND UNIVERSAL SIGN.

EMERGENCY SHOWER AND EYEWASH (ESE)

DETAIL 6
NO SCALE –

PIPE MATERIALS ARE SPECIFIED IN SECTIONS 15000, PIPING-GENERAL AND 15410, PLUMBING-PIPING AND PIPE INSULATION SYSTEMS

REQUEST FOR PROPOSAL

NO.	DATE	ISSUED FOR	BY
1	07/24/15	REQUEST FOR PROPOSAL	G.A.B.

DESIGNED B.L.S.
DRAWN C.M.S.
CHECKED B.L.S.
PROJ. ENGR. G.A.B.

BERNARD L. STEIGER P.E.
No. 49808

HAZEN AND SAWYER
Environmental Engineers & Scientists
4000 Hollywood Boulevard, Suite 750N
Hollywood, Florida 33021
Certificate of Authorization Number: 2771

SCALE –

CLIENTS PROJECT: –
ENGINEERS PROJECT: 44238-004
CAD REFERENCE: 44238-004BP3-P11

NORTH MIAMI FLORIDA
CITY OF NORTH MIAMI
PUBLIC WORKS UTILITIES

WINSON WATER TREATMENT PLANT
RELIABILITY IMPROVEMENTS – VOLUME C: WTP REHAB
LANDSCAPE
ELEVATIONS – CODE
MINIMUM

DATE: JULY 2015
SHEET: 328 OF 335
DRAWING: P-11

PLOT DATE: 7/24/2015 4:42 PM BY: TBOCAS
XREFs= ..\Tblock\44238-004-BP3-TB
File = H:\44238-004\Drawings\design build package\volume c - wtp rehab\Bid Package 3 - WTP Rehab\Plumbing\44238-004BP3-P11 Saved by Bernard Save date = 6/6/2014 6:09 PM

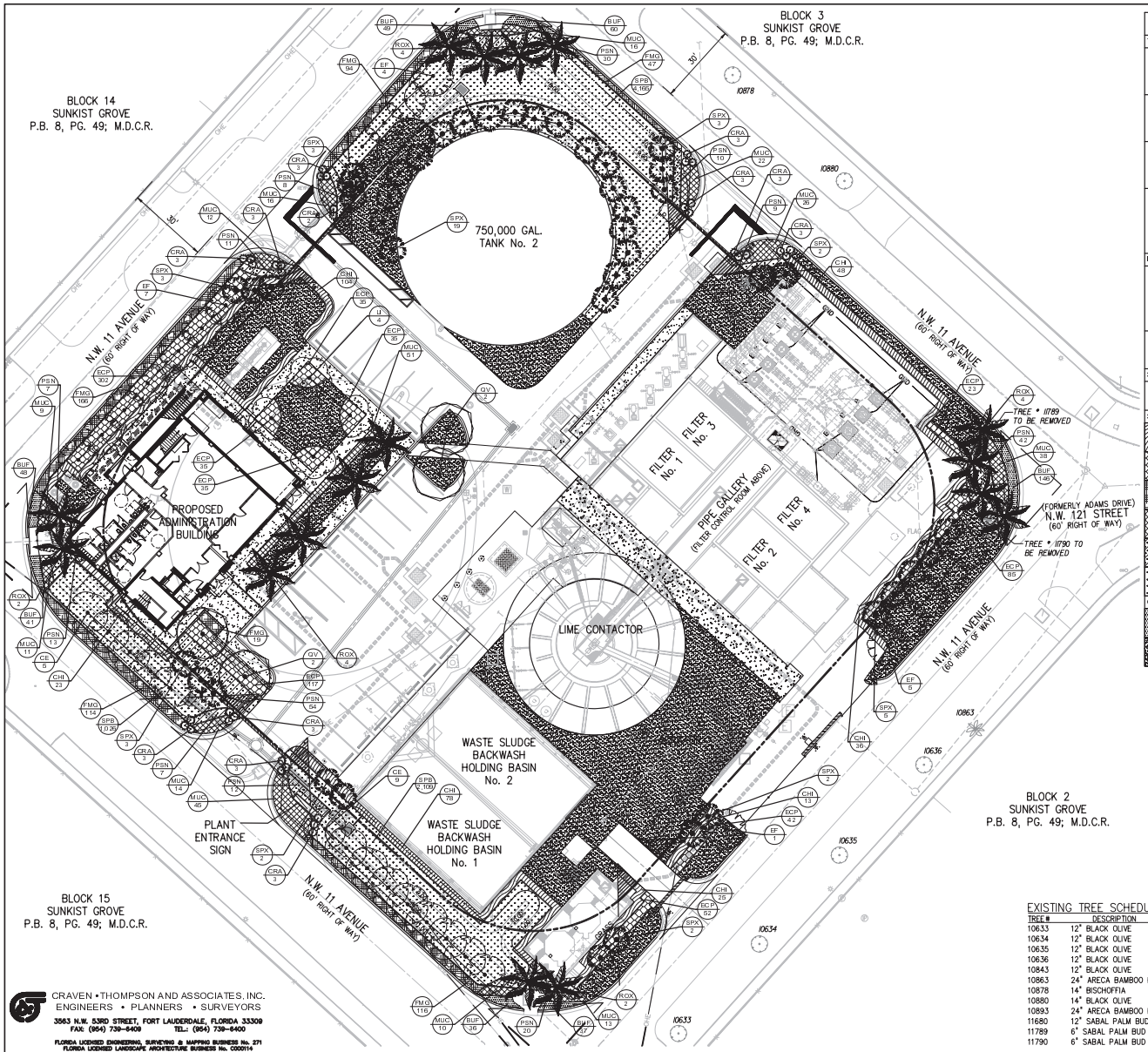

PLANT SCHEDULE

TREES	CODE	QTY	BOTANICAL NAME	COMMON NAME	SPECIFICATIONS	CANOPY	NATIVE
	CE	14	Conocarpus erectus	Green Button Wood	2.5" cal. 12' ht. x 6' spread. multi trunk	30' diam.	NATIVE
	EF	17	Eugenia foetida	Spanish Stopper	2.5" cal. 12' ht. x 6' spread. multi trunk	20' diam.	NATIVE
	LI	4	Lagerstroemia indica	Crape Myrtle	2.5" cal. 12' ht. x 6' spread. multi trunk	20' diam.	
	QV	4	Quercus virginiana 'Highrise'	Highrise Live Oak	3" Cal. 14' Ht. x 6' Spread	50' diam.	NATIVE
PALM TREES	**CODE**	**QTY**	**BOTANICAL NAME**	**COMMON NAME**	**SPECIFICATIONS**		
	ROX	16	Roystonea regia	Florida Royal Palm	18" DBH. 12' CT. MATCHED	25' diam.	NATIVE
	SPX	44	Sabal palmetto	Sabal Palm	12" DBH. 12-15' OA HT STAGGERED	10' diam.	NATIVE
SHRUBS	**CODE**	**QTY**	**BOTANICAL NAME**	**COMMON NAME**	**SPECIFICATIONS**		
	CRA	35	Crinum americanum	Seven Sisters	7 gal		
SHRUB AREAS	**CODE**	**QTY**	**BOTANICAL NAME**	**COMMON NAME**	**SPECIFICATIONS**	**SPACING**	
	CHI	327	Chrysobalanus icaco 'Redtip'	Red Tip Cocoplum	24X24X24"	30" o.c.	NATIVE
	ECP	761	Echinacea purpurea	Purple Coneflower	12X12X12"	18" o.c.	NATIVE
	FMG	556	Ficus microcarpa 'Green Island'	Green Island Ficus	12X12X12"	18" o.c.	
	MUC	283	Muhlenbergia capillaris	Pink Muhly	18X18X18"	24" o.c.	NATIVE
	PSN	223	Psychotria nervosa	Wild Coffee	24X24X24"	30" o.c.	NATIVE
	SPB	7,300	Spartina bakeri	Sand Cord Grass	1 gal	12" o.c.	NATIVE
GROUND COVERS	**CODE**	**QTY**	**BOTANICAL NAME**	**COMMON NAME**	**SPECIFICATIONS**	**SPACING**	
	BUF	417	Bulbine frutescens	Bulbine	1 gal	12" o.c.	
	SOD	10,850 sf	Stenotaphrum secundatum	St. Augustine Grass	sod		

GENERAL NOTES:

1. THIS DRAWING IS BASED UPON AND BOUNDARY AND TOPOGRAPHIC SURVEY PREPARED BY CRAVEN THOMPSON AND ASSOCIATES, INC. (CTA) DATED 03-10-10. CTA PROJECT No. 10-0013-001
2. THE PROPOSED LANDSCAPE PLAN UTILIZES "FLORIDA FRIENDLY LANDSCAPE" PRINCIPLES.
3. ALL PLANT MATERIAL SPECIFIED FROM THE FLORIDA FRIENDLY PLANT SELECTION GUIDE.
4. ALL PLANT MATERIAL TO CONFORM TO THE STANDARDS FOR FLORIDA NO. 1 OR BETTER AS GIVEN IN THE "GRADES AND STANDARDS FOR NURSERY PLANTS".

EXISTING TREE SCHEDULE

TREE #	DESCRIPTION	LOCATION	DISPOSITION
10633	12" BLACK OLIVE	OFF-SITE	PROTECT IN PLACE
10634	12" BLACK OLIVE	OFF-SITE	PROTECT IN PLACE
10635	12" BLACK OLIVE	OFF-SITE	PROTECT IN PLACE
10636	12" BLACK OLIVE	OFF-SITE	PROTECT IN PLACE
10843	12" BLACK OLIVE	OFF-SITE	PROTECT IN PLACE
10863	24" ARECA BAMBOO PALM BUD HEIGHT=4'	OFF-SITE	PROTECT IN PLACE
10878	14" BISCHOFFIA	OFF-SITE	PROTECT IN PLACE
10880	14" BLACK OLIVE	OFF-SITE	PROTECT IN PLACE
10893	24" ARECA BAMBOO PALM BUD HEIGHT=4'	OFF-SITE	PROTECT IN PLACE
11680	12" SABAL PALM BUD HEIGHT 20'	ON-SITE	PROTECT IN PLACE
11789	6" SABAL PALM BUD HEIGHT 20'	ON-SITE	REMOVE
11790	6" SABAL PALM BUD HEIGHT 20'	ON-SITE	REMOVE

NORTH MIAMI - WINSTON WTP — **ENHANCED CODE MINIMUM LANDSCAPE TABLE**

LANDSCAPE LEGEND
Zoning District: PU - Public Use — Net Lot Area: 1.348 AC or 58,715 sf

OPEN SPACE	REQUIRED	PROVIDED
A. Square feet of open space required by Chapter 33: Net Lot Area=58,715 sf X 20%=11,743 sf	11,743 sf	23,278 sf
B. Square feet of parking lot landscape required by Div. 12, N. Miami 14,600 sf X 15% = 2,190 SF	2,190 sf	2,355 sf
C. Total square feet of landscaped area(11,743 sf + 2,190 sf = 13,933sf)	13,933 sf	25,633 sf
LAWN AREA CALCULATION		
A. Total square feet of landscaped open space = 13,933 sf		
B. Maximum lawn area (St. Augustine sod) permitted (20% X 13,933 sf)	2,786 sf	10,850 sf
TREES		
A. The number of trees required per net lot acre	22	
less the existing numer of trees that meet minimum requirements (minus)	0	
22 trees X net lot acreage of 1.348ac = 30 trees	**30**	**38**
B. 30% palm trees allowed (3 palms = 1 tree)	27 palms	53 palms
(30 trees X 30%= 9 trees or 27 palms)	(9 trees)	(18 trees)
C. Percentage of native trees required (# of trees provided X 30%)	17	73
(56 trees provided X 30% =17 trees)		
D. Street trees (max. average spacing 25' oc)	**26**	**17**
(901 If along street / 35 = 26)		
Palms as street trees (max average spacing 25' oc)	36	**16**
(901 If along street / 25 = 36)		
E. Street trees located directly beneath power lines (max avg spacing 25' oc)	0	0
(0 If along street / 25= 0)		
F. Total number of trees provided	**56**	**69**
SHRUBS		
A. The total number of trees required (56) X 10 = 560 shrubs required	560	9,668
B. The number of shubs required (560) X 30% = 168 Native Shrubs Req'd	168	9,077

IRRIGATION PLAN:
Required by Chapter 33. Auto Irrigation __X__ or hose bib ____ provided.

CRAVEN • THOMPSON AND ASSOCIATES, INC.
ENGINEERS • PLANNERS • SURVEYORS
3563 N.W. 53RD STREET, FORT LAUDERDALE, FLORIDA 33309
FAX: (954) 739-6409 TEL.: (954) 739-6400
FLORIDA LICENSED ENGINEERING, SURVEYING & MAPPING BUSINESS No. 271
FLORIDA LICENSED LANDSCAPE ARCHITECTURE BUSINESS No. C000114

NO.	DATE	ISSUED FOR	BY
1	07/24/15	REQUEST FOR PROPOSAL	G.A.B.

DESIGNED DJS
DRAWN DJS
CHECKED JDH
PROJ. ENGR. DJS

Douglas J. Schultz LA
No. LA6666937

HAZEN AND SAWYER
Environmental Engineers & Scientists
4000 Hollywood Boulevard, Suite 750N
Hollywood, Florida 33021
Certificate of Authorization Number: 2771

SCALE 1"=20'-0"

CLIENTS PROJECT: –
ENGINEERS PROJECT: 44238-004
CAD REFERENCE: 44238-0048P3-L1

NORTH MIAMI FLORIDA
CITY OF NORTH MIAMI
PUBLIC WORKS UTILITIES

WINSON WATER TREATMENT PLANT
RELIABILITY IMPROVEMENTS – VOLUME C: WTP REHAB

LANDSCAPE PLAN

DATE: JULY 2015
SHEET: 329 OF 335
DRAWING: L-1

REQUEST FOR PROPOSAL

GENERAL NOTES

1. A PRE-CONSTRUCTION MEETING WITH THE CITY OF NORTH MIAMI LANDSCAPE INSPECTOR IS REQUIRED PRIOR TO LANDSCAPING ACTIVITIES INCLUDING REMOVAL OF TREES AND/OR INSTALLATION OF PLANT MATERIAL. CALL THE LANDSCAPE INSPECTOR A MINIMUM OF 5 DAYS PRIOR TO DISTRICT'S START DATE TO SCHEDULE PRE-CONSTRUCTION MEETING.

2. ALL EXISTING TREES PROPOSED TO REMAIN ARE TO BE SEPARATED FROM THE LIMITS OF DISTURBANCE OF THE CONSTRUCTION AREA BY TREE PROTECTION FENCING AND SIGNAGE. THE TREE PROTECTION FENCING SHALL BE LOCATED AT THE EDGE OF THE TREE PROTECTION ZONE AS DEPICTED ON THE PLAN OR AT THE EDGE OF THE DRIPLINE(S) IF A TREE PROTECTION ZONE IS NOT DESIGNATED. NO MATERIAL STORAGE OR CONSTRUCTION ACCESS IS PERMITTED WITHIN THE TREE PROTECTION ZONE.

3. ALL EXISTING TREES SHALL BE PRUNED TO ANSI A-300 STANDARDS TO CORRECT POTENTIAL HAZARDS.

4. A TREE REMOVAL PERMIT IS REQUIRED PRIOR TO REMOVAL OR RELOCATION OF ANY TREE OR PALM. CONTACT THE CITY OF NORTH MIAMI ARBORIST TO OBTAIN PERMIT INFORMATION.

5. LANDSCAPE CONTRACTOR SHALL NOTIFY SUNSHINE ONE CALL OF FLORIDA, INC. AT 1-800-432-4770 A MINIMUM OF 2 FULL BUSINESS DAYS PRIOR TO DIGGING. LANDSCAPE CONTRACTOR IS RESPONSIBLE FOR AVOIDING DAMAGE TO UTILITIES FROM PLANT INSTALLATION.

6. TREE RELOCATIONS:
   A. EXISTING TREES TO BE RELOCATED SHALL BE ROOT PRUNED A MINIMUM OF 120 DAYS PRIOR TO RELOCATION.
   B. MINIMUM ROOT BALL SIZES SHALL BE IN ACCORDANCE WITH ANSI STANDARDS AS FOLLOWS:

CALIPER	MINIMUM ROOT BALL DIAMETER
1	16
2	24
3	32
4	42
5	54
6	60
7	70
8	80
>8	12 INCHES PER INCH OF TRUNK DIAMETER

   TRANSPLANTED TREES WITH UNDERSIZED ROOT BALLS MAY BE REJECTED BY THE CITY ARBORIST AND REPLACEMENT TREES MAY BE REQUIRED.
   C. A TEMPORARY IRRIGATION SYSTEM SHALL BE PROVIDED DURING AND FOR THE FIRST 40 DAYS AFTER ROOT PRUNING.

7. ALL PLANTING MUST FOLLOW PLANTING SPECIFICATIONS AND DETAILS SHOWN ON THE PLAN.

8. SUBSTITUTIONS OF PLANT SPECIES OR SPECIFICATIONS MUST BE APPROVED IN WRITING BY THE CITY OF NORTH MIAMI ARBORIST PRIOR TO USE.

9. ALL PLANT MATERIAL PLANTED PER THIS LANDSCAPE PLAN SHALL BE FLORIDA GRADE #1 OR BETTER, AS SPECIFIED IN THE CURRENT EDITION OF THE FLORIDA DEPARTMENT OF AGRICULTURE'S GRADES AND STANDARDS FOR NURSERY PLANTS. DAMAGED PLANT MATERIAL SHALL BE REJECTED AND REPLACED PRIOR TO INSTALLATION.

10. ALL SIZES SHOWN FOR PLANT MATERIAL ARE TO BE CONSIDERED MINIMUMS.

11. WHERE QUANTITIES AND/OR SPECIES DIFFER BETWEEN THE PLANTING PLANS AND PLANT LISTS, THE PLANS SHALL TAKE PRECEDENCE.

12. ALL NEW PLANT MATERIAL SHALL BE WARRANTED BY THE LANDSCAPE CONTRACTOR FOR A MINIMUM PERIOD OF ONE YEAR. THE WARRANTEE PERIOD SHALL BEGIN AFTER ACCEPTANCE OF THE PLANTS BY THE CITY ARBORIST.

13. PLANT BEDS TO BE TREATED WITH PRE-EMERGENT HERBICIDE PRIOR TO PLANTING.

14. ALL TREE AND PALM STAKING AND SUPPORT SHALL BE REMOVED ONE YEAR AFTER INSTALLATION.

15. NO FERTILIZER SHALL BE APPLIED TO NEWLY PLANTED TREES AND PALMS.

16. ALL LANDSCAPE MATERIAL SHALL BE THOROUGHLY WATERED AT THE TIME OF PLANTING, NO DRY PLANTING PERMITTED.

17. LANDSCAPE CONTRACTOR SHALL BE RESPONSIBLE FOR PROVIDING TEMPORARY WATER PROVISIONS UNTIL SUCH TIME AS THE IRRIGATION SYSTEM IS OPERATIONAL.

18. ALL WIRE GUYS AND/OR FABRICS TRAPS SHALL BE FLAGGED WITH FLORESCENT COLORED TAPE.

19. MULCHING:
   A. ALL LANDSCAPE AREAS NOT COVERED BY SOD SHALL BE COVERED BY A MINIMUM 3-INCH LAYER OF MULCH.
   B. A MULCH RING WITH A MINIMUM RADIUS OF 24 INCHES (48 INCH DIAMETER), IS REQUIRED AROUND ALL NEWLY INSTALLED TREES AND PALMS.
   C. MULCH SHALL BE MALELEUCA 'FLORIMULCH' MULCH.
   D. NO MULCH SHALL BE PLACED TOUCHING OR WITHIN SIX INCHES OF THE TRUNK OF A TREE OR PALM.

20. ALL NEWLY LANDSCAPED AREAS SHALL BE EXCAVATED DOWN TO A DEPTH OF 30 INCHES BELOW FINAL GRADE AND BACKFILLED WITH CLEAN DEBRIS-FREE SOIL. EXISTING SOIL MAY BE RE-USED FOR BACKFILLING IF DEBRIS IS REMOVED AND ORGANIC CONTENT IS SUFFICIENT OR SOIL IS AUGMENTED WITH TOPSOIL. CONSTRUCTION ACCESS SHALL BE RESTRICTED FROM THE LANDSCAPE AREA AFTER EXCAVATION AND BACKFILL IS COMPLETE.

21. ALL LANDSCAPE AREAS SHALL BE FINISH GRADED SUCH THAT THEY ARE A MINIMUM OF 3-5 INCHES BELOW SURROUNDING PAVED SURFACES SO AS NOT TO IMPEDE THE FLOW OF DRAINAGE INTO LANDSCAPED AREAS AND TO ALLOW FOR A 3-INCH MULCH LAYER.

22. THE LOCATION OF PLANT MATERIAL AS SHOWN ON THESE PLANS IS FINAL. THE FINAL LOCATIONS CAN BE ADJUSTED ON SITE TO ACCOMMODATE UNFORESEEN FIELD CONDITIONS. THESE CHANGES MUST COMPLY WITH ALL SAFETY SETBACK CRITERIA AND BE DIRECTED OR APPROVED BY THE LANDSCAPE ARCHITECT AND THE CITY OF SUNRISE CODES.

23. REPORT ANY AND ALL DISCREPANCIES BETWEEN THE CONSTRUCTION DRAWINGS AND FIELD CONDITIONS TO THE LANDSCAPE ARCHITECT IMMEDIATELY.

24. THE CONTRACTOR IS RESPONSIBLE FOR VERIFYING ALL PLANT COUNTS AND REPORT ANY DISCREPANCIES TO THE LANDSCAPE ARCHITECT PRIOR TO CONSTRUCTION.

25. BEFORE CONSTRUCTION BEGINS THE CONTRACTOR IS RESPONSIBLE FOR LOCATING ALL UNDERGROUND UTILITIES AND SHALL AVOID DAMAGE TO ALL UTILITIES DURING CONSTRUCTION. IF SUCH DAMAGE OCCURS THE CONTRACTOR IS RESPONSIBLE FOR ANY NECESSARY REPAIRS AND THEY SHOULD BE MADE IMMEDIATELY AT THE CONTRACTOR'S EXPENSE WITH SUPERVISION OF THE LANDSCAPE ARCHITECT.

26. ALL WORK MUST COMPLY WITH THE FLORIDA STATE STATUTE 553.81- "PROTECTION OF UNDERGROUND PIPELINES."

27. THE CONTRACTOR MUST COMPLY WITH ALL STATE AND LOCAL WATER QUALITY STANDARDS.

28. THE LOCATION OF ALL THE UTILITIES SHOWN ON THE PLAN IS APPROXIMATE. THE EXACT LOCATION SHALL BE DETERMINED BY THE CONTRACTOR ON SITE. ALL PLANTING MAY BE ADJUSTED TO AVOID CONFLICTS WITH UTILITIES AND/OR EXISTING ABOVE GROUND ELEMENTS. ANY ADJUSTMENTS GREATER THAN 10 FEET SHALL BE DONE ONLY WITH THE APPROVAL OF THE LANDSCAPE ARCHITECT.

29. CAUTION SHOULD BE EXERCISED WHEN WORKING NEAR EXISTING PLANTING AND ANY FURNISHING THAT IS TO REMAIN ON SITE TO PREVENT ANY DAMAGE. ANY SIGNS, STRUCTURES, OR PLANTING SHALL BE REPLACED AT THE CONTRACTOR'S EXPENSE IF DAMAGED BEYOND USE. DAMAGED BEYOND USE WILL BE DETERMINED BY THE LANDSCAPE ARCHITECT.

30. ANY PUBLIC LAND CORNER WITHIN THE LIMITS OF CONSTRUCTION IS TO BE PROTECTED. IF A CORNER MONUMENT IS IN DANGER OF BEING DISTROYED AND HAS NOT BEEN PROPERLY REFERENCED, THE CONTRACTOR SHALL NOTIFY THE DISTRICT LOCATION SURVEYOR IMMEDIATELY.

31. MAINTENANCE OF TRAFFIC FOR THIS PROJECT SHALL BE IN ACCORDANCE WITH THE MANUAL OF UNIFORM TRAFFIC CONTROL DEVICES FOR STREETS AND HIGHWAYS (U.S. DEPARTMENT OF TRANSPORTATION, F.H.W.A.). ATTENTION IS DIRECTED TO STANDARD INDEX NUMBER 623 OF THE ROADWAY AND TRAFFIC DESIGN STANDARDS.

32. THE CONTRACTOR SHALL INSURE THAT INSTALLATION OF ALL PLANTING IN MEDIANS AND RIGHT OF WAYS CONFORMS TO CRITERIA SET FORTH IN F.D.O.T. ROADWAY AND TRAFFIC DESIGN STANDARDS AND IN F.D.O.T. MAINTENANCE RATING PROGRAM.

33. ANY MAINTENANCE THAT INVOLVES TRAFFIC ACTIVITY SHALL BE COORDINATED WITH THE CONTRACTOR AND ONGOING CONSTRUCTION ACTIVITIES.

34. CONTRACTOR IS RESPONSIBLE FOR CLEANING ALL WORK AREAS AT THE END OF EACH WORKING DAY. ANY DEBRIS SHALL BE COLLECTED AND DEPOSITED APPROPRIATELY OFF SITE DAILY. ALL MATERIALS, PRODUCTS, AND EQUIPMENT SHALL BE STORED IN AN ORGANIZED FASHION AS DIRECTED BY THE LANDSCAPE ARCHITECT.

35. THE CONTRACTOR IS RESPONSIBLE FOR OBTAINING ALL PERMITS THAT ARE REQUIRED BY THE CITY FOR TREE REMOVAL, RELOCATION, TREE PROTECTION OR INSTALLATION BEFORE BEGINNING WORK.

36. ALL EXISTING TREES TO REMAIN SHALL BE PROTECTED BY INSTALLING PROTECTIVE BARRIERS AROUND THE DRIP LINE OF TREES. THESE PROTECTIVE BARRIERS SHALL BE SEEN EASILY BY OPERATORS OF TRUCKS AND OTHER EQUIPMENT. THEY SHALL BE CONSTRUCTED OF STURDY MATERIALS (NOT FLAGGING OR RIBBON) AND SHALL BE INSTALLED PRIOR TO AND DURING CONSTRUCTION.

37. DO NOT STORE OR USE ANY MATERIALS OR EQUIPMENT WITHIN THE DRIP LINE OF ANY TREE THAT IS TO BE RELOCATED OR PROTECTED IN PLACE UNLESS THE ACTIVITY IS BEING DONE TO PROTECT THE TREES.

38. DO NOT DISCHARGE OR CONTAMINATE THE SOIL WITHIN THE DRIP LINE OF ANY OF THE TREES TO BE RELOCATED OR PROTECTED IN PLACE. THIS INCLUDES SUBSTANCES SUCH AS PAINT, OIL, SOLVENTS, PETROLEUM PRODUCTS, ASPHALT, CONCRETE, MORTAR, OR ANY OTHER MATERIAL THAT MAY CAUSE DAMAGE TO THE TREES ROOT SYSTEM.

39. CLEARING OF VEGETATION WITHIN THE DRIP LINE OF THE TREES DESIGNATED TO BE PROTECTED IN PLACE OR RELOCATED SHALL BE PERFORMED CAUTIOUSLY WITH HAND TOOLS TO MINIMIZE ANY DAMAGE TO THE TREES ROOT SYSTEM.

40. DO NOT ATTACH ANYTHING TO TREES THAT ARE TO REMAIN ON THE SITE UNLESS IT IS SOMETHING THAT WILL PROTECT AND NOT DAMAGE THE TREE.

41. KEEP A NATURAL GRADE ABOVE THE DRIP LINE ON ANY TREE THAT IS TO BE PROTECTED IN PLACE. ANY PRESERVED TREES DISTURBED DURING CONSTRUCTION MUST BE RETURNED TO ITS ORIGINAL GRADE AFTER CONSTRUCTION.

42. ALL LANDSCAPE AND LIGHTING WILL BE IN ACCORDANCE WITH ORDINANCE #2011-109 FOR PROTECTION OF SEA TURTLES.

43. ALL LANDSCAPE AND PLANTING SHALL COMPLY WITH BROWARD COUNTY LAND USE POLICY 9.03.03 AND WITH CHAPTER 62B-55 OF THE FLORIDA ADMINISTRATIVE CODE.

LANDSCAPE NOTES

1. ALL PLANT MATERIAL FURNISHED BY THE LANDSCAPE CONTRACTOR UNLESS OTHERWISE SPECIFIED SHALL BE FLORIDA NO. 1 GRADE OR BETTER, AND SHALL BE INSTALLED AS SPECIFIED IN "GRADES AND STANDARDS FOR NURSERY PLANTS," PUBLISHED BY THE FLORIDA DEPARTMENT OF AGRICULTURE AND CONSUMER SERVICES. ALL PLANT MATERIAL MUST BE HEALTHY, VIGOROUS MATERIALS, FREE OF PESTS AND DISEASES.

2. ALL SIZES SHOWN FOR PLANT MATERIAL ON THE PLAN ARE TO BE CONSIDERED AS MINIMUMS. ALL PLANT MATERIAL MUST MEET OR EXCEED THESE MINIMUM REQUIREMENTS FOR BOTH HEIGHT AND SPREAD. ANY OTHER REQUIREMENTS FOR SPECIFIC SHAPE OR EFFECT AS NOTED ON THE PLAN OR SPECIFICATIONS WILL ALSO BE REQUIRED FOR ACCEPTANCE. ANY SUBSTITUTIONS MUST BE APPROVED BY LANDSCAPE ARCHITECT BEFORE PLANTING.

3. THE CONTRACTOR IS RESPONSIBLE FOR ALL PLANTING MEETING SPECIFICATIONS AS NOTED BEFORE INSTALLATION. CONTRACTOR SHALL IMMEDIATELY REMOVE ALL PLANTING THAT DOES NOT MEET SPECIFICATIONS AND BE HELD RESPONSIBLE TO REPLACE IT WITH APPROPRIATE PLANTING.

4. IN THE EVENT OF A VARIATION BETWEEN THE PLANT LISTS AND THE ACTUAL QUANTITY OF PLANTS SHOWN, THE PLANS HOLD TRUE.

5. ALL ROOT BALLS SHALL CONFORM TO THE SIZE STANDARDS SET FORTH.

6. CONTRACTOR TO SUBMIT TO THE LANDSCAPE ARCHITECT THE GROWERS AND/OR SITE INSPECTION CERTIFICATE FOR PLANT MATERIALS TWO (2) WEEKS PRIOR TO COMMENCEMENT OF WORK.

7. ALL PLANT MATERIALS MUST BE PROTECTED DURING TRANSPORT AND DELIVERY TO THE JOB SITE WITH SHADE CLOTH OR OTHER ACCEPTABLE MEANS OF WINDBURN PREVENTION.

8. CONTRACTORS SHALL FIELD VERIFY ALL INFORMATION PRIOR TO INITIATING PLANTING INSTALLATION. ALL EXISTING PLANTING SHALL REMAIN INTACT AND UNDISTURBED UNLESS OTHERWISE NOTED ON THE PLANS.

9. LANDSCAPE CONTRACTOR SHALL FIELD STAKE THE LOCATION OF ALL PLANT MATERIAL PRIOR TO INSTALLATION FOR THE REVIEW AND APPROVAL OF THE LANDSCAPE ARCHITECT.

10. ALL TREES MUST BE FLORIDA #1, STRAIGHT TRUNKED, FULL HEADED, AND MEET ALL REQUIREMENTS SPECIFIED.

11. CONTRACTOR TO GUARANTEE PLANT MATERIAL FOR A FULL YEAR ESTABLISHMENT PERIOD FOLLOWING DATE OF SUBSTANTIAL COMPLETION.

12. CONTRACTOR TO REPLACE REJECTED PLANT MATERIAL WITHIN ONE WEEK OF NOTICE.

13. CONTRACTOR TO REQUEST INSPECTION OF PROJECT IN WRITING. IF ALL WORK IS SATISFACTORY AND COMPLETE IN ACCORDANCE WITH CONDITIONS OF CONTRACT DOCUMENTS, THEN THE CITY AND LANDSCAPE ARCHITECT SHALL DECLARE SUBSTANTIALLY COMPLETE. SUBSTANTIAL COMPLETION CONSTITUTES THE BEGINNING OF THE GUARANTEE PERIOD.

14. INSTALLATION: ALL PLANT MATERIAL SHALL BE INSTALLED IN A SOUND WORKMANLIKE MANNER AND ACCORDING TO GOOD PLANTING PROCEDURES WITH THE QUALITY OF PLANT MATERIALS AS HEREINAFTER DESCRIBED. ALL ELEMENTS OF LANDSCAPING SHALL BE INSTALLED SO AS TO MEET ALL APPLICABLE ORDINANCES AND CODE REQUIREMENTS.

15. CONTRACTOR IS RESPONSIBLE FOR WATERING AND MAINTAINING ALL TREES AND LANDSCAPE UNTIL FINAL ACCEPTANCE BY OWNER. CONTRACTOR SHALL INSURE THAT ALL DRAINAGE AND PERCOLATION OF ALL PLANTING PITS PRIOR TO INSTALLATION OF PLANT MATERIAL. CONTRACTOR IS RESPONSIBLE FOR REPLACEMENT OF PLANTS IF DEAD OR DYING PRIOR TO FINAL ACCEPTANCE.

16. TYPICALLY, SHRUB AND GROUNDCOVER PLANTINGS ARE SHOWN AS MASS PLANTING BEDS. PLANTS SHOULD BE PLACED ON A TRIANGULAR SPACING SHOWN IN THE PLANTING DETAILS. PLANT CENTER TO CENTER DIMENSIONS (O.C.) ARE LISTED ON THE PLANT LIST.

17. TREES GROWN IN GROW BAGS OR GROW BAG TYPE MATERIAL MUST HAVE THE GROW BAG REMOVED ENTIRELY BEFORE PLANTING.

18. BALLED AND BURLAPPED MATERIAL SHALL HAVE THE TOP ONE HALF (½) OF THE BURLAP AROUND THE BASE OF THE TRUNK CUT AND PULLED BACK. DO NOT REMOVE THE BURLAP BUT WIRE CAGES, STRAPS, ETC. MUST BE CUT AND REMOVED COMPLETELY BEFORE INSTALLATION.

19. CONTRACTOR SHALL REFER TO THE LANDSCAPE PLANTING DETAILS, PLANT LIST, GENERAL NOTES, AND ANY OTHER MATERIALS FROM THE LANDSCAPE ARCHITECT FOR COMPLETE LANDSCAPE PLANTING INSTRUCTIONS.

20. "BRANCH TOUCHING BRANCH" PROVIDED AT TIME OF INSTALLATION. ALL HEDGES - BOTH COCOPLUM AND SILVER BUTTONWOOD TO BE MIN. 24" AT PLANTING AND 36" HIGH WITHIN ONE YEAR.

21. THE FOLLOWING GUIDELINES SHALL BE FOLLOWED TO ENSURE SUCCESSFUL TRANSPLANTING OF TREES:
   a. ANY TREE BEING RELOCATED SHALL NOT BE UNNECESSARILY DAMAGED DURING REMOVAL, TRANSPORT, OR REPLANTING OF THAT TREE.
   b. TREES MUST BE ROOT PRUNED APPROPRIATELY PRIOR TO REMOVAL.
   c. DURING AND FOLLOWING TRANSPLANTING THE ROOT BALL MUST BE KEPT MOIST AT ALL TIMES.
   d. TRANSPLANTED TREES SHALL BE BRACED AT LEAST ONE FULL YEAR.
   e. TRANSPLANTED TREES SHALL NOT BE FERTILIZED AT PLANTING TIME BUT SHALL BE WATERED SUFFICIENTLY UNTIL THE TREE GROWTH IS REESTABLISHED.
   f. RELOCATED TREES/PALMS WILL BE MOVED IN ACCORDANCE WITH MINIMUM STANDARDS SET FORTH IN ANSI A-300.
   g. ALL CROWN PRUNING SHALL BE DONE IN ACCORDANCE WITH NATIONAL ARBORIST ASSOCIATION STANDARDS OR PALM PRUNING IN ACCORDANCE WITH CITY STANDARDS.

23. LANDSCAPE CONTRACTOR SHALL REGRADE ALL AREAS DISTURBED BY PLANT REMOVAL, RELOCATION, AND/OR INSTALLATION WORK. LANDSCAPE CONTRACTOR SHALL REPLACE (BY EQUAL SIZE AND QUALITY) ANY AND ALL EXISTING PLANT MATERIAL DISTURBED OR DAMAGED BY PLANT REMOVAL, RELOCATION OR INSTALLATION.

24. CONTRACTOR SHALL BE RESPONSIBLE TO REPLACE ALL PORTIONS OF EXISTING LAWN AREAS DAMAGED WHILE COMPLETING PLANTING INSTALLATION WITH SAME GRASS SPECIES TO THE SATISFACTION OF THE LANDSCAPE ARCHITECT.

25. GENERAL GRADING TO APPROXIMATELY 1 INCH SHALL BE PROVIDED BY THE CONTRACTOR. ALL FINISHED SITE GRADING AND FINAL DECORATIVE BERM SHAPING SHALL BE PROVIDED BY THE LANDSCAPE CONTRACTOR.

26. ALL LANDSCAPE MATERIALS SHALL BE MAINTAINED TO PROVIDE CONTINUOUS CLEAR ZONES FOR SIGHT VISIBILITY FOR PEDESTRIANS AND VEHICULAR TRAFFIC AND LANDSCAPE MAINTENANCE SHALL CONFORM TO STANDARD INDEX 546 CRITERIA SET FORTH IN F.D.O.T. ROADWAY AND TRAFFIC DESIGN STANDARDS.

SOILS, FERTILIZER AND MULCH

1. ENSURE THAT ALL PLANTING SOIL IS FERTILE, FRIABLE, NATURAL LOAM SURFACE SOIL, REASONABLY FREE OF SUBSOIL, CLAY LUMPS, WEEDS AND OTHER LITTER, AND FREE OF ROOTS, STUMPS AND STONES LARGER THAN ONE INCH IN ANY DIMENSION, AND OTHER EXTRANEOUS OR TOXIC MATTER HARMFUL TO PLANT GROWTH. SHOULD ANY SOIL AMENDMENT BE NECESSARY, THE CONTRACTOR SHALL BRING THIS TO THE ATTENTION OF THE LANDSCAPE ARCHITECT.

2. APPLY APPROVED HERBICIDE - ACCORDING TO MANUFACTURERS RATE AND SPECS WITHIN LIMITS OF ALL AREAS TO BE PLANTED. PROTECT EXISTING PLANTS TO REMAIN FROM OVERSPRAY OR SPRAY WITHIN ROOT ZONE. CONTRACTOR TO ENSURE TOTAL WEED ERADICATION.

3. SCARIFY SUBSOIL TO A DEPTH OF 3 INCHES.

4. PLANTING MIX FOR TREES, SHRUBS, AND GROUNDCOVERS SHALL CONSIST OF A THOROUGHLY BLENDED MIXTURE OF:
   A. 20% TOPSOIL
   B. 30% PEAT OR COMPOST
   C. 50% SAND

5. PLANTING MIX FOR BACKFILL AROUND ROOT BALLS OF PALMS:
   A. 90% NATIVE SAND FROM ON SITE OR APPROVED SUBSTITUTE
   B. 10% TOPSOIL

6. TOPSOIL
   A. 50 PERCENT DECOMPOSED ORGANIC MATTER (MUCK)
   B. 25 PERCENT PEAT
   C. 25 PERCENT EXISTING SOIL (IF SOIL IS SUITABLE FOR PLANTING)

7. FERTILIZE ALL TREES, SHRUBS AND GROUNDCOVER WITH PLANTING TABLETS 20-20-5 FORMULA, 21 GRAM.

8. ALL SHRUB BEDS SHALL BE EXCAVATED TO A MINIMUM DEPTH OF 30" AND BACK FILLED WITH THE SPECIFIED MIXTURE.

9. SMOOTH ALL PREPARED TOPSOIL TO 3" EXCEPT WITHIN DRIP LINES OF EXISTING TREES AND 4" BELOW TOP OF SURROUNDING PAVING EDGES. REMOVE ALL ROCKS AND OTHER OBJECTS OVER 1" IN DIAMETER.

10. FINISH GRADE ALL PREPARED TOPSOIL AREAS TO A SMOOTH, EVEN SURFACE ASSURING POSITIVE DRAINAGE AWAY FROM THE STRUCTURES AND ELIMINATE ANY LOW AREAS WHICH MAY COLLECT WATER.

11. TOPSOIL SHALL NOT BE EXTREMELY ACIDIC OR ALKALINE, NOR CONTAIN ANY TOXIC SUBSTANCE WHICH MAY BE HARMFUL TO PLANT GROWTH. THE PH SHALL BE IN THE RANGE OF 5.5 6.5.

12. CONTRACTOR SHALL MULCH ALL PLANTING MATERIAL THROUGHOUT AND COMPLETELY TO A 3 INCH DEPTH WITH CLEAN, WEED FREE MALELEUCA 'FLORIMULCH' MULCH.

13. MINIMUM OF 2" TOPSOIL MUST BE ADDED UNDER ALL SODDED AREAS.

IRRIGATION NOTES:

1. XERISCAPE PRINCIPLES HAVE BEEN APPLIED TO THIS LANDSCAPE PLAN AS SPECIFIED IN SFWMD's XERISCAPE PLANT GUIDE II AND SHALL BE APPLIED ALL THROUGHOUT LANDSCAPE INSTALLATION AND MAINTENANCE.

2. THE CONTRACTOR SHALL MAINTAIN TEMPORARY IRRIGATION OR PROVIDE HAND WATERING FOR ALL RELOCATED TREES AND PALMS FROM NOTICE TO PROCEED UNTIL PERMANENT IRRIGATION SYSTEM IS OPERABLE.

3. THE IRRIGATION SYSTEM SHALL BE CONFIGURED TO ACCOMMODATE EXISTING TREES AND PALMS.

4. ALL LANDSCAPED AREAS MUST BE IRRIGATED IN ACCORDANCE WITH ALL LOCAL/COUNTY REQUIREMENTS.

5. REMOVE EXISTING IRRIGATION EQUIPMENT WHICH INTERFERES WITH ANY CONSTRUCTION. THIS INCLUDES, BUT IS NOT LIMITED TO, CONTROLLERS, SPRINKLER HEADS, PIPE, QUICK COUPLERS, BACKFLOW PREVENTERS, CONTROL WIRE AND CONDUITS. ADDITIONALLY THE CONTRACTOR IS RESPONSIBLE FOR MAINTAINING THE EXISTING SYSTEM THROUGHOUT THE CONSTRUCTION PROCESS.

6. LANDSCAPE CONTRACTOR SHALL COORDINATE ALL PLANTING WORK WITH IRRIGATION WORK. INSPECT IRRIGATION SYSTEM AND INSURE THAT ADEQUATE WATER IS AVAILABLE BEFORE BEGINNING PLANTING OPERATIONS. IRRIGATION SYSTEMS WILL NOT PROVIDE SUFFICIENT QUANTITIES OF WATER FOR NEWLY PLANTED MATERIALS. THE LANDSCAPE CONTRACTOR IS RESPONSIBLE FOR DEEP ROOT HAND WATERING.

7. SEE IRRIGATION PLANS FOR ADDITIONAL NOTES AND DETAILS.

CRAVEN • THOMPSON AND ASSOCIATES, INC.
ENGINEERS • PLANNERS • SURVEYORS
3563 N.W. 53RD STREET, FORT LAUDERDALE, FLORIDA 33309
FAX: (954) 739-6409 TEL.: (954) 739-6400
FLORIDA LICENSED ENGINEERING, SURVEYING & MAPPING BUSINESS No. 271
FLORIDA LICENSED LANDSCAPE ARCHITECTURE BUSINESS No. C000114

NO.	DATE	ISSUED FOR	BY
1	07/24/15	REQUEST FOR PROPOSAL	G.A.B.

DESIGNED DJS
DRAWN DJS
CHECKED JDH
PROJ. ENGR. DJS

Douglas J. Schultz LA
No. LA6666937

HAZEN AND SAWYER
Environmental Engineers & Scientists
4000 Hollywood Boulevard, Suite 750N
Hollywood, Florida 33021
Certificate of Authorization Number: 2771

SCALE: NONE

CLIENTS PROJECT: –
ENGINEERS PROJECT: 44238-004
CAD REFERENCE: 44238-004BP3-L2

NORTH MIAMI FLORIDA
CITY OF NORTH MIAMI
PUBLIC WORKS UTILITIES

WINSON WATER TREATMENT PLANT
RELIABILITY IMPROVEMENTS – VOLUME C: WTP REHAB
LANDSCAPE NOTES

DATE: JULY 2015
SHEET: 330 OF 335
DRAWING: L-2

REQUEST FOR PROPOSAL

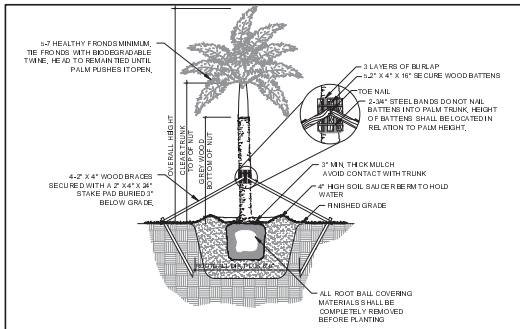

1 ROYAL PALM
SECTION NTS

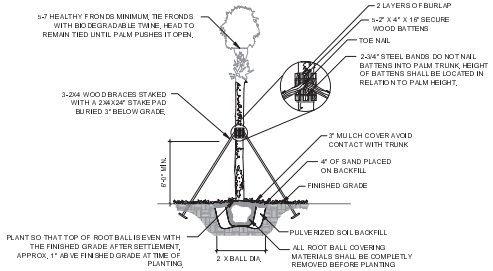

2 PALM
SECTION NTS

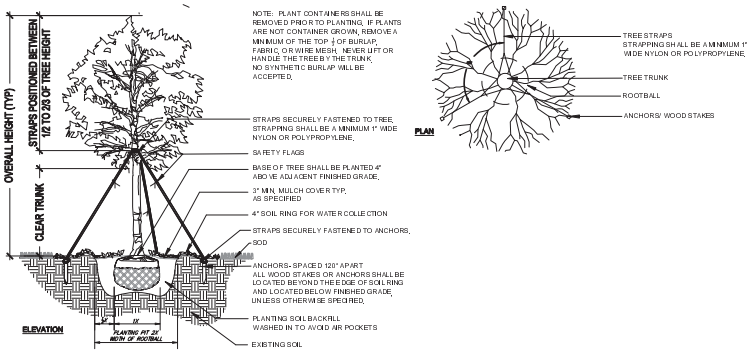

3 LARGE TREE
SECTION NTS

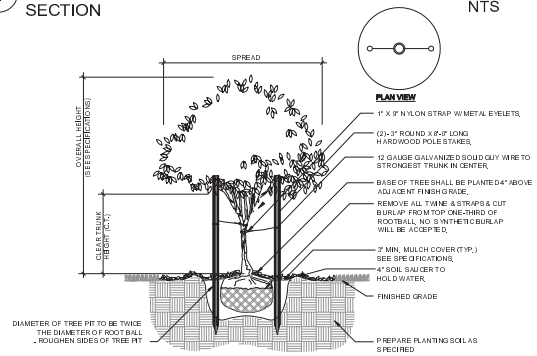

4 SMALL TREE
SECTION NTS

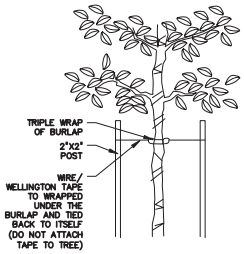

5 TREE STRAPPING FOR YOUNG TREES
SECTION NTS

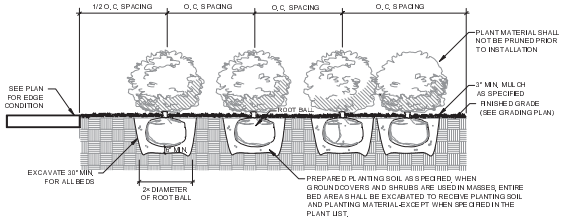

6 SHRUB PLANTING
SECTION NTS

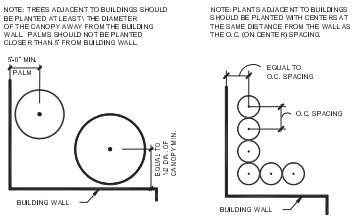

7 PLANTING ADJACENT TO BUILDING
PLAN NTS

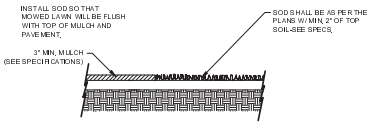

8 SOD INSTALLATION
SECTION NTS

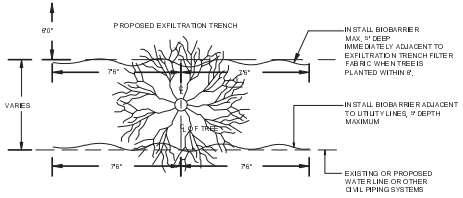

9 BIO-BARRIER
SECTION NTS

CRAVEN • THOMPSON AND ASSOCIATES, INC.
ENGINEERS • PLANNERS • SURVEYORS
3563 N.W. 53RD STREET, FORT LAUDERDALE, FLORIDA 33309
FAX: (954) 739-6409 TEL.: (954) 739-6400
FLORIDA LICENSED ENGINEERING, SURVEYING & MAPPING BUSINESS No. 271
FLORIDA LICENSED LANDSCAPE ARCHITECTURE BUSINESS No. C000114

NO.	DATE	ISSUED FOR	BY
1	07/24/15	REQUEST FOR PROPOSAL	G.A.B.

DESIGNED DJS
DRAWN DJS
CHECKED JDH
PROJ. ENGR. DJS

Douglas J. Schultz LA
No. LA6666937

HAZEN AND SAWYER
Environmental Engineers & Scientists
4000 Hollywood Boulevard, Suite 750N
Hollywood, Florida 33021
Certificate of Authorization Number: 2771

SCALE NONE

CLIENTS PROJECT: –
ENGINEERS PROJECT: 44238-004
CAD REFERENCE: 44238-004BP3-L3

NORTH MIAMI FLORIDA
CITY OF NORTH MIAMI
PUBLIC WORKS UTILITIES

WINSON WATER TREATMENT PLANT
RELIABILITY IMPROVEMENTS – VOLUME C: WTP REHAB
LANDSCAPE DETAILS

DATE: JULY 2015
SHEET: 331 OF 335
DRAWING: L-3

REQUEST FOR PROPOSAL

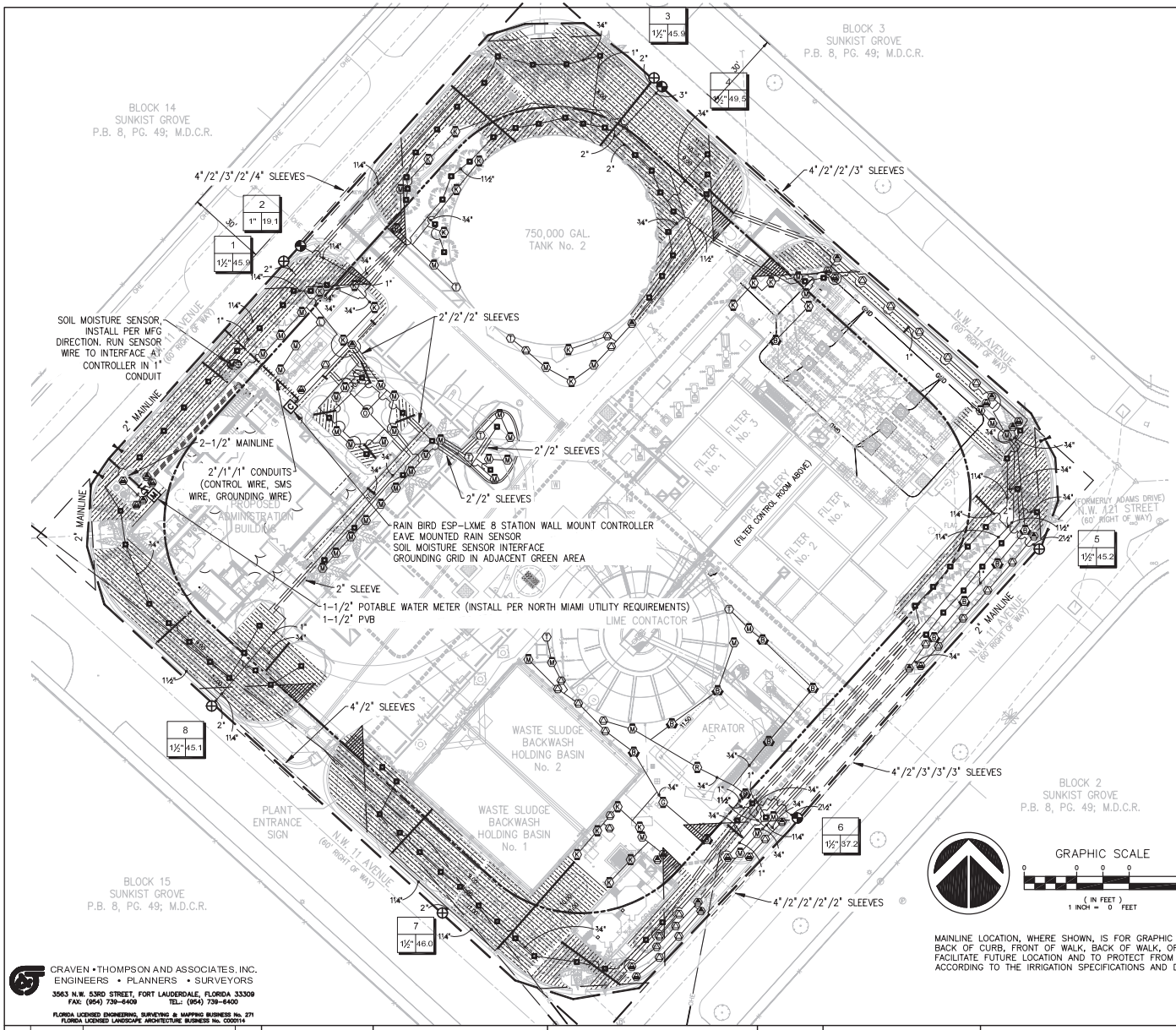

Masuen Consulting LLC
Water Resource Consultants
5079 North Dixie Highway, #323
Oakland Park, FL 33334
Telephone (866) 928-1533
Fax (800) 928-1534

IRRIGATION LEGEND

QTY	SYM	DESCRIPTION	DET.
	5 / 1½" 45.2	STATION NUMBER / MINUTE-CATALOG FLOW / VALVE SIZE — GALLONS PER	
1	M	LINE SIZE BY 2" TAP, MAXIMUM 10' OF 2" POLYETHYLENE SERVICE LINE AND A PROPOSED 1-1/2" POTABLE WATER METER (INSTALL PER NORTH MIAMI UTILITY REQUIREMENTS)	A
1		1-1/2" FEBCO 765 PRESSURE VACUUM BREAKER	A
3		RAIN BIRD PEB SERIES RCV (SIZED PER PLAN) WITH A NIBCO T-113 GATE VALVE IN A CARSON 1220 JUMBO VALVE BOX WITH BOLT DOWN LID.	B1
5		RAIN BIRD PEB SERIES REMOTE CONTROL VALVE WITH A NIBCO T-113 GATE VALVE & NETAFIM MANUAL DISC FILTER MODEL DF100/150/200 (PER PLANS)-140, EACH IN A SEPARATE CARSON 1220 JUMBO VALVE BOX W/ BOLD DOWN LID.	B1 B2
1	C	RAIN BIRD ESPLXME WALL MOUNT 8 STATION CONTROLLER, GROUNDING GRID, MINI CLIK RAIN SENSOR #502 AND BASELINE WATERTEC S100 SOIL MOISTURE SENSOR INTERFACE MOUNTED ADJACENT TO CONTROLLER	C1
1	MS	BASELINE WATERTEC S100 SOIL MOISTURE SENSOR biSENSOR INSTALLED ON SITE PER MANUFACTURER'S RECOMMENDATIONS. COMMUNICATION WIRE TO BE CONNECTED TO SMS INTERFACE AT CONTROLLER VIA 1" CONDUIT	C2
3		NIBCO T-113 BRASS MAINLINE ISOLATION VALVE (LINE SIZE) IN A CARSON 1419 VALVE BOX.	D
		CLASS 200 PVC LATERAL LINE W/ SCH 40 SOLVENT WELD PVC FITTINGS (SIZE PER PLAN, MINIMUM PIPE SIZE SHALL BE 3/4", NO 1/2" PIPES PERMITTED)	L
		SCHEDULE 40 SOLVENT-WELD PVC MAINLINE W/SCH 40 SOLVENT-WELD PVC FITTINGS (SIZE PER PLAN)	L
		SCH 40 GRAY PVC CONDUIT W/SCH 40 SOLVENT-WELD PVC FITTINGS, SHOWN WHERE NOT WITH MAINLINE (SIZE PER PLAN)	
		NETAFIM TECHLINE TLCV9-12 – 12" O.C TRIANGULAR SPACED GRID EMITTER PATTERN-SEE DETAILS	M,N
		CLASS 200 PVC HEADER W/SCH 40 SOLVENT-WELD PVC FITTINGS (SIZE PER PLAN)	M,N
		CLASS 200 PVC SLEEVES W/SCH 40 SOLVENT-WELD PVC FITTINGS (SIZE PER PLAN)	O

QUANTITIES GIVEN ARE FOR CONTRACTOR CONVENIENCE ONLY. THE ACCURACY IS NOT GUARANTEED. ALL QUANTITIES SHALL BE VERIFIED.

*DET (ON THE LEGEND) – THE LETTER IN THIS COLUMN DENOTES THE CORRESPONDING DETAIL SHOWN ON THE DETAIL SHEET.

IRRIGATION HEAD LEGEND

SYMBOL QUANTITY	SYMBOL	DESCRIPTION	DETAIL	DESIGN (P.S.I)	DESIGN GPM PER SYMBOL
99		EACH SYMBOL DENOTES TWO (2) RAIN BIRD 1804-SAM-1401 FLOOD BUBBLERS	Q	30	0.50
6	T	RAIN BIRD 1806-SAM-PRS-30 W/ HUNTER MPCORNERHT NOZZLE ADJ ARC 0-90	R	30	VAR
45	M	RAIN BIRD 1806-SAM-PRS-30 W/ HUNTER MP1000 NOZZLE MAROON ADJ ARC 90-210	R	30	VAR
1	O	RAIN BIRD 1806-SAM-PRS-30 W/ HUNTER MP1000 NOZZLE OLIVE ADJ ARC 360	R	30	0.65
21	K	RAIN BIRD 1806-SAM-PRS-30 W/ HUNTER MP2000 NOZZLE BLACK ADJ ARC 90-210	R	30	VAR
1	G	RAIN BIRD 1806-SAM-PRS-30 W/ HUNTER MP2000 NOZZLE GREEN ADJ ARC 210-270	R	30	VAR
1	R	RAIN BIRD 1806-SAM-PRS-30 W/ HUNTER MP2000 NOZZLE RED ARC 360	R	30	1.27
14	B	RAIN BIRD 1806-SAM-PRS-30 W/ HUNTER MP3000 NOZZLE BLUE ADJ ARC 90-210	R	30	VAR
14	RST	RAIN BIRD 1806-SAM-PRS-30 W/ HUNTER MPCORNER NOZZLE RST	R	30	VAR
13	LST	RAIN BIRD 1806-SAM-PRS-30 W/ HUNTER MPCORNER NOZZLE LST	R	30	VAR
28	SST	RAIN BIRD 1806-SAM-PRS-30 W/ HUNTER MPCORNER NOZZLE SST	R	30	VAR

GRAPHIC SCALE
0 0 0 0 0
(IN FEET)
1 INCH = 0 FEET

MAINLINE LOCATION, WHERE SHOWN, IS FOR GRAPHIC CLARITY PURPOSES ONLY. INSTALL AT THE BACK OF CURB, FRONT OF WALK, BACK OF WALK, OR ADJACENT TO OTHER HARDSCAPES TO FACILITATE FUTURE LOCATION AND TO PROTECT FROM DAMAGE. ENSURE MAINLINE IS INSTALLED ACCORDING TO THE IRRIGATION SPECIFICATIONS AND DETAILS.

811 KNOW WHAT'S BELOW ALWAYS CALL 811 BEFORE YOU DIG
It's fast, it's free, it's the law.
Call 811 two business days before digging

CRAVEN • THOMPSON AND ASSOCIATES, INC.
ENGINEERS • PLANNERS • SURVEYORS
3563 N.W. 53RD STREET, FORT LAUDERDALE, FLORIDA 33309
FAX: (954) 739-6409 TEL.: (954) 739-6400
FLORIDA LICENSED ENGINEERING, SURVEYING & MAPPING BUSINESS No. 271
FLORIDA LICENSED LANDSCAPE ARCHITECTURE BUSINESS No. C000114

NO.	DATE	ISSUED FOR	BY
1	07/24/15	REQUEST FOR PROPOSAL	G.A.B.

DESIGNED JMJ
DRAWN JMJ
CHECKED TKM
PROJ. ENGR. DJS

Douglas J. Schultz LA
No. LA6666937

HAZEN AND SAWYER
Environmental Engineers & Scientists
4000 Hollywood Boulevard, Suite 750N
Hollywood, Florida 33021
Certificate of Authorization Number: 2771

SCALE 1"=20'-0"

CLIENTS PROJECT: –
ENGINEERS PROJECT: 44238-004
CAD REFERENCE: 44238-004BP3-IR1

NORTH MIAMI FLORIDA
CITY OF NORTH MIAMI
PUBLIC WORKS UTILITIES

WINSON WATER TREATMENT PLANT
RELIABILITY IMPROVEMENTS – VOLUME C: WTP REHAB
IRRIGATION PLAN

DATE: JULY 2015
SHEET: 332 OF 335
DRAWING: IR-1

REQUEST FOR PROPOSAL

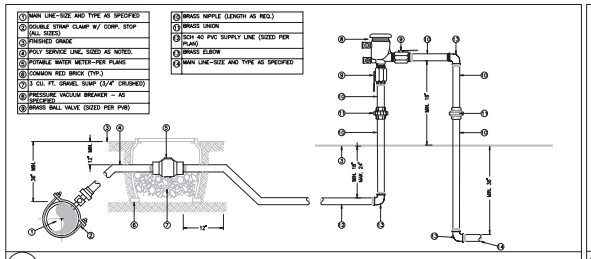

A METER WITH PRESSURE VACUUM BREAKER

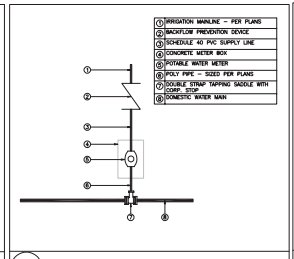

A METER W/BF DIAGRAMATIC

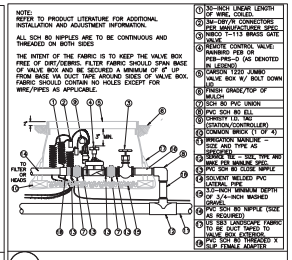

B1 RAIN BIRD RCV W/GATE VALVE

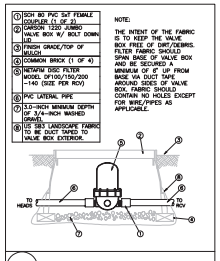

B2 NETAFIM FILTER

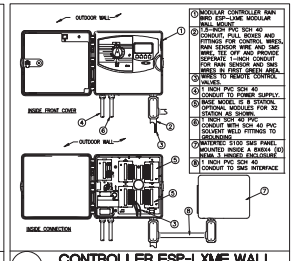

C1 CONTROLLER ESP-LXME WALL MOUNT

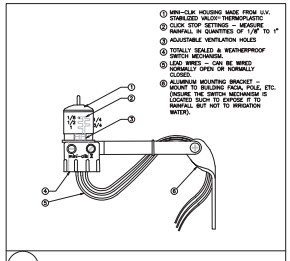

C MINI-CLICK II RAIN SENSOR

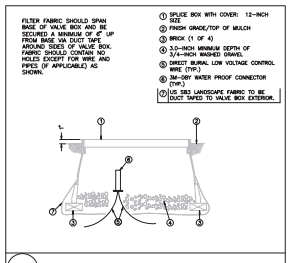

C WIRE SPLICE

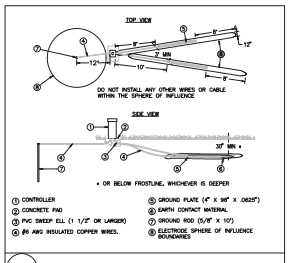

C GROUNDING DETAIL

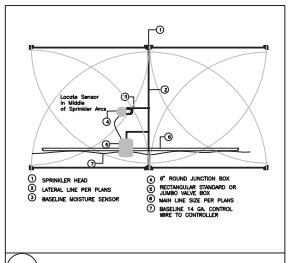

C2 SOIL MOISTURE SENSOR

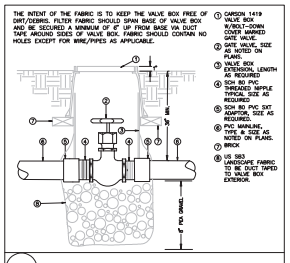

D T-113 GATE VALVE

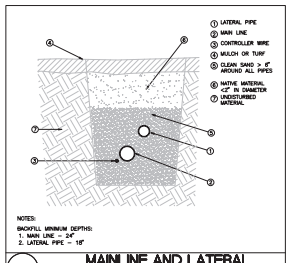

L MAINLINE AND LATERAL BACKFILL DETAIL

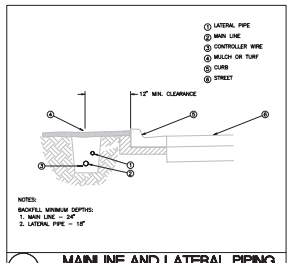

L MAINLINE AND LATERAL PIPING DETAIL

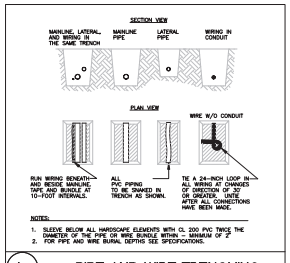

L PIPE AND WIRE TRENCHING

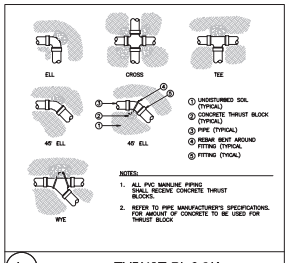

L THRUST BLOCK

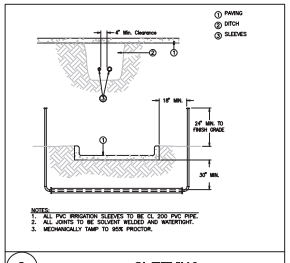

O SLEEVING

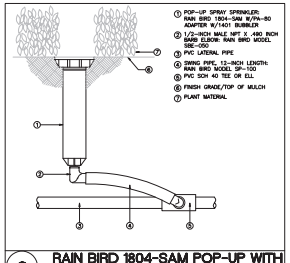

Q RAIN BIRD 1804-SAM POP-UP WITH 1401 BUBBLER

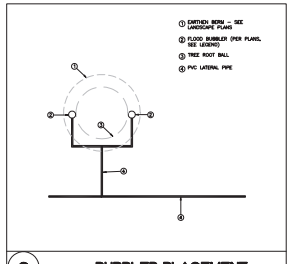

Q BUBBLER PLACEMENT

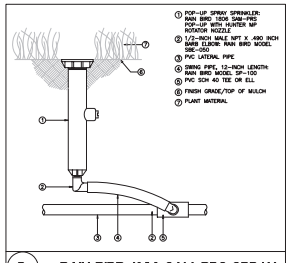

R RAIN BIRD 1806 SAM-PRS SPRAY

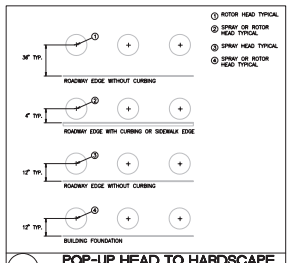

T POP-UP HEAD TO HARDSCAPE LOCATION DETAIL-A

Masuen Consulting LLC
Water Resource Consultants
5079 North Dixie Highway, #323
Oakland Park, FL 33334
Telephone (866) 928-1533
Fax (800) 928-1534

CRAVEN • THOMPSON AND ASSOCIATES, INC.
ENGINEERS • PLANNERS • SURVEYORS
3563 N.W. 53RD STREET, FORT LAUDERDALE, FLORIDA 33309
FAX: (954) 739-6409 TEL.: (954) 739-6400
FLORIDA LICENSED ENGINEERING, SURVEYING & MAPPING BUSINESS No. 271
FLORIDA LICENSED LANDSCAPE ARCHITECTURE BUSINESS No. C000114

NO.	DATE	ISSUED FOR	BY
1	07/24/15	REQUEST FOR PROPOSAL	G.A.B.

DESIGNED JMJ
DRAWN JMJ
CHECKED TKM
PROJ. ENGR. DJS

Douglas J. Schultz LA
No. LA6666937

HAZEN AND SAWYER
Environmental Engineers & Scientists
4000 Hollywood Boulevard, Suite 750N
Hollywood, Florida 33021
Certificate of Authorization Number: 2771

SCALE 1"=20'-0"

CLIENTS PROJECT: –
ENGINEERS PROJECT: 44238-004
CAD REFERENCE: 44238-004BP3-IR2

NORTH MIAMI FLORIDA
CITY OF NORTH MIAMI
PUBLIC WORKS UTILITIES

WINSON WATER TREATMENT PLANT
RELIABILITY IMPROVEMENTS – VOLUME C: WTP REHAB
IRRIGATION DETAILS

DATE: JULY 2015
SHEET: 333 OF 335
DRAWING: IR-2

REQUEST FOR PROPOSAL

NETAFIM™ IRRIGATION NOTES

PART 1 – SUBMITTALS

1.01 Submit (5) five copies of manufacturers catalog cut sheets of the following listed items:

1. Netafim dripper tubing specified with pressure compensating emitters
2. Netafim insert barbed fittings
3. Netafim in-line disc filter
4. Netafim pressure regulator
5. Stainless steel clamps
6. Metal ground stakes for tubing
7. PVC threaded and insert fittings

1.02 Spare parts – upon completion of the installation, turn over the following spare parts and specialty tool to the owner's authorized representative. Include with the following quantities of items a list of each part with appropriate part number (for ordering replacement products) and local supply store of where these parts can be purchased:

(10') Of dripper line for each dripper interval and discharge rate used on the project
(6) Barbed couplings
(6) Barbed 90 degree elbow fittings
(6) Barbed tee fittings
(6) 180 degree 2-way adapter tee fittings
(6) Male adapters with 3/4" fpt
(1) Spare filter element of the same mesh size used on the project

PART 2 – MATERIALS

2.10 Piping materials – dripper tubing (model #TLCV92-12) with pressure compensating emitters shall be of nominal sized one-half inch low density, ultraviolet resistant, linear polyethylene tubing with internal pressure-compensating, self-cleaning, integral drippers (each with a built in check valve) at a specified interval. The tubing shall be brown in color and shall conform to an outside diameter (O.D.) of .66" and an inside diameter (I.D.) of .57". The low volume tubing shall be capable of discharging .92 gallons per hour (G.P.H.) between operating pressures of 15 to 50 PSI for each dripper. The individual self-cleaning, pressure-compensating drippers shall be co-extruded to the inside of the tubing wall. The emitters are constructed of three individual pieces:

1. A black-colored dripper containing a filtration system on the inlet side, compensation cell, and recessed chamber with a water outlet.
2. A hard plastic diaphragm retainer, colored black (0.92 gpm) with chamfered edges and a recessed groove in the center, the full length of the diaphragm.
3. A flexible black rubber diaphragm that allows excessive pressure to build up within the chamber to purge sediment or other debris that may not have been captured by the disc filter.

2.20 Insert barbed fittings – shall be constructed of molded, ultraviolet resistant, brown colored plastic having a nominal inside dimension (I.D.) of .57". Each fitting shall have a minimum of two ridges or barbs per outlet. All fittings shall be of one manufacturer and shall be available in one of the following end configurations:

- Barbed insert fittings
- Male pipe threads (MPT) with barbed insert fittings
- Female pipe threads (FPT) with barbed insert fittings

2.30 Pressure regulation valves – N/A

2.40 Disc filter – the disc filter body shall be molded black plastic with male pipe threads (MPT) for both the inlet and the outlet ports. A threaded cap on one end of the body shall be capable of periodic servicing by unscrewing the cap from the main filter body. On the 3/4" model, a manual shutoff valve shall be co-molded to the opposing end of the removable cap as a part of the main body. This device shall be capable of closing off the inlet port so the disc element can be removed when the main line is still pressurized. The filter elements shall be either a disc-type or a canister screen filter. The disc-type shall be color coded in one of four colors denoting filtration of 80,120,140, and 200 mesh. The canister type screen shall be available in three levels of filtration, 80,120, and 140 mesh.

2.50 Stainless steel clamps – tubing clamps shall be constructed to 304 ANSI stainless steel and shall be one 'ear' type. The 'ear' shall be capable of being pinched with a pinching tool to secure the tubing around the insert barbed fitting. The interior clamp wall shall be smooth to prevent crimping or pinching of the tubing. Wall thickness of clamps shall be .0236" with an overall band width of 1/4". Properly secured clamps shall be capable of withstanding a maximum operating pressure of 441 psi.

PART 3 – EXECUTION

3.10 Staking for lateral dripper line layout – verify existing field dimensions of the area to be irrigated using the irrigation plans for reference/accuracy. Begin dripper tubing layout 4" away from both hardscape surfaces; i.e.., concrete sidewalks, curbs, asphalt, and/or undefined edges; i.e.., shovel-cut headers. Mark tubing intervals on the ground with flags, paint, or some other markings that can be maintained throughout the installation.

3.11 Installation of dripper tubing – tubing can be installed in one of three following methods:

1. Over excavation – In small areas, where it is feasible, over-excavate the entire area to a depth of 4" below finish grade. Plant all specimen trees and shrubs, then place tubing at the row spacing interval indicated on the plans.
2. Trenching – hand or mechanically trench to the pipe depth (4") and back fill flush with finish grade. Avoid mechanically trenching within the drip line of existing trees and shrubs. Hand trench around existing trees and shrubs when root sizes greater than 1" in diameter are encountered. Remove all rock 1-1/2" in diameter and larger when excavating and remove from site. Do not back fill trenches with rock that will come in direct contact with tubing or rigid PVC piping.

3.12 Cover – Install all underground piping horizontally and as level as possible. PVC piping should be installed to the depths and in the manner outlined in the general irrigation notes. Netafim tubing should be installed to a depth of 4" in shrub areas and 6" in turf areas. Netafim tubing should be installed with the water outlets in upward or downward facing position. Offset the outlets in adjacent rows to obtain a triangular pattern throughout the tubing layout. In irregular areas, some water outlets may end up too close to fixed improvements and may have to be capped off with a dripper plug ring.

3.13 Barbed fittings – Connect dripper tubing to barbed fittings by pushing on and over both barbs until the tubing has seated against another piece of tubing or has butted against another portion of the barbed fitting. For water pressures in excess of 40 psi, use stainless steel clamps as outlined in section 3.50 (pipe clamping).

3.14 Pipe clamping – When design operating pressure exceeds 40 psi, stainless steel pipe clamps shall be used. Slip clamps over tubing before slipping tubing over insert barbed fitting. Place clamp between the first and second ridge of the barbed fittings and crimp the 'ear' of the clamp tightly. Crimp the 'ear' a second time to ensure proper seating.

3.15 Pressure regulator – If a pressure regulator is specified, install it below grade, downstream, and in line with the remote control valve. Refer to the detail sheet. If a prv is specified it will be detailed with the remote control valve. Place the regulator with the arrow, that is molded into the side of the body, pointing in the direction of the flow of water. Provide straight piping on the outlet side of the regulator for a dimension not less than three lengths of the overall body dimension.

3.16 Remote control valve – Install the remote control valves level and below grade with a minimum of 4" of clearance to the top of the inside of the valve box cover. The arrow cast or molded into the side/bottom of the remote control valve should be pointing in the direction of the flow of water. Place a minimum of one cubic foot of 3/4" gravel in the bottom of the valve box. Support each corner of the valve box with a common red brick. At finish grade, the top of the valve box shall be two inches above surrounding grades.

3.17 Disc filter – Install the disc filter, horizontally level, below grade and after the remote control valve (refer to the detail and note sheets). The position of the disc filter in the valve box shall be off-center to allow for removal of the disc element for periodic servicing. Include a minimum of 3" deep of 3/4" gravel in the bottom of the valve box. Support the valve box using a common red brick under each corner of the valve box.

3.18 Flushing – Prior to back filling and before connection of the line flushing valves, flush the entire system to remove any dirt or sediment that may have entered the system during installation.

3.19 Testing – Prior to back filling, open the remote control valve and operate each zone. Check for leakage around barbed and threaded fittings. Make the necessary repairs to stop all leaks. After repairs, re-test to insure all leaks have been repaired. Continue this process until no more leaks are observed.

3.20 Back fill – After placement of tubing, connection to rigid PVC supply header, and initial system flushing, and testing, back filling can begin. Fill remainder of trenches, or where over-excavation and grade level installation was used, place shovel fulls of dirt on piping to keep them in place and maintain row spacing intervals as required. Bring soil up to finished grade and remove any rocks larger than 1" during final grading and contouring. Compact back fill by hand to a minimum of 90% relative compaction. Maintain adequate soil levels as needed to achieve the required compaction requirement.

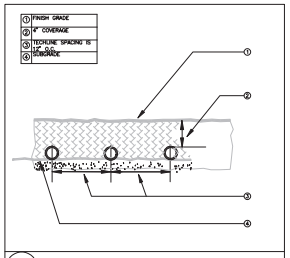

M TECHLINE SUB GRADE LAYOUT

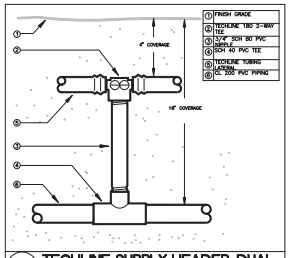

M TECHLINE SUPPLY HEADER-DUAL FEED

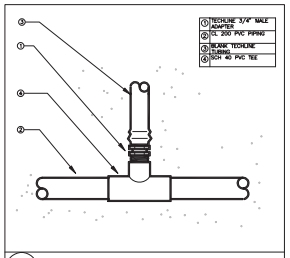

M TECHLINE TO PVC CONNECTION

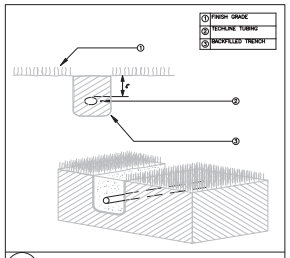

M TECHLINE TRENCHING DETAIL

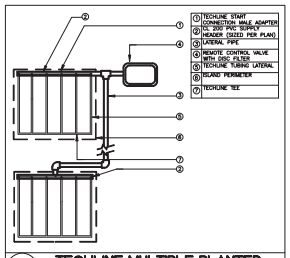

N TECHLINE MULTIPLE PLANTER LAYOUT

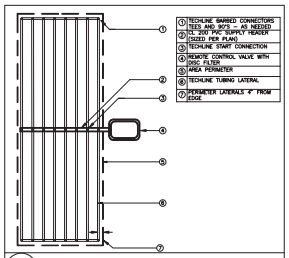

N TECHLINE DUAL FEED LAYOUT

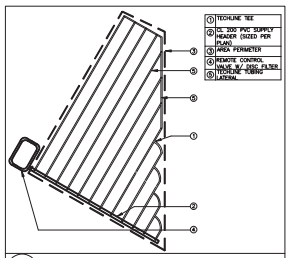

N TECHLINE ODD AREA LAYOUT

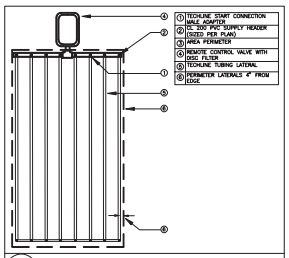

N TECHLINE SINGLE FEED LAYOUT

Masuen Consulting LLC
Water Resource Consultants
5079 North Dixie Highway, #323
Oakland Park, FL 33334
Telephone (866) 928-1533
Fax (800) 928-1534

CRAVEN • THOMPSON AND ASSOCIATES, INC.
ENGINEERS • PLANNERS • SURVEYORS
3563 N.W. 53RD STREET, FORT LAUDERDALE, FLORIDA 33309
FAX: (954) 739-6409 TEL.: (954) 739-6400
FLORIDA LICENSED ENGINEERING, SURVEYING & MAPPING BUSINESS No. 271
FLORIDA LICENSED LANDSCAPE ARCHITECTURE BUSINESS No. C000114

NO.	DATE	ISSUED FOR	BY
1	07/24/15	REQUEST FOR PROPOSAL	G.A.B.

DESIGNED JMJ
DRAWN JMJ
CHECKED TKM
PROJ. ENGR. DJS

Douglas J. Schultz LA
No. LA6666937

HAZEN AND SAWYER
Environmental Engineers & Scientists
4000 Hollywood Boulevard, Suite 750N
Hollywood, Florida 33021
Certificate of Authorization Number: 2771

SCALE 1"=20'-0"

CLIENTS PROJECT: –
ENGINEERS PROJECT: 44238-004
CAD REFERENCE: 44238-004BP3-IR3

NORTH MIAMI FLORIDA
CITY OF NORTH MIAMI
PUBLIC WORKS UTILITIES

WINSON WATER TREATMENT PLANT
RELIABILITY IMPROVEMENTS – VOLUME C: WTP REHAB

IRRIGATION DETAILS & NOTES

DATE: JULY 2015
SHEET: 334 OF 335
DRAWING: IR-3

REQUEST FOR PROPOSAL

IRRIGATION NOTES & SPECIFICATIONS

Irrigation design based on the Craven Thompson & Associates Landscape Plan dated June 2014. Contractor shall refer to these plans to coordinate sprinkler and pipe locations.

The system has been designed to conform with the requirements of all applicable codes, laws, ordinances, rules, regulations and conventions. Should any conflict exist, the requirements of the codes shall prevail. It is the responsibility of the owner/installation contractor to ensure the entire system is installed as designed. Irrigation contractor responsible for obtaining all required permits according to federal, state and local laws.

The scope of work is shown on the plans, notes and details. The Irrigation Contractor shall be certified as a CERTIFIED IRRIGATION CONTRACTOR by the Irrigation Association. The certification shall be current and in good standing.

THE WORK

The work specified in this section consists of furnishing all components necessary for the installation, testing, and delivery of a complete, fully functional automatic landscape irrigation system that complies with the irrigation plans, specifications, notes, and details. This work shall include, but not be limited to, the providing of all required material if applicable (pump(s), backflows, pipes, valves, fittings, controllers, wire, primer, glue, etc.), layout, protection to the public, excavation, assembly, installation, back filling, compacting, repair of road surfaces, controller and low voltage feeds to valves, cleanup, maintenance, guarantee and as-built plans.

All irrigated areas shall provide 100% head-to-head coverage from a fully automatic irrigation system with a rain (and freeze as appropriate) shut off device. If the rain shut off device is a rain sensor, it shall be installed to prevent activation by adjacent heads. Zones are prioritized first by public safety and then by hydraulic concerns. This sequencing will be a mandatory punch list item.

These plans have been designed to satisfy/exceed the Florida Building Code (FBC) Appendix F and the Florida Irrigation Society Standards and Specifications for Turf and Landscape Irrigation Systems, fourth edition. All products should be installed per manufacturer's recommendation. Contractor shall verify all underground utilities 72 hours prior to commencement of work.

It is the responsibility of the irrigation contractor to familiarize themselves with all grade differences, location of walls, retaining walls, structures and utilities. Do not willfully install the sprinkler system as shown on the drawings when it is obvious in the field that unknown obstruction, grade differences or differences in the area dimensions exist that might not have been considered in the engineering. Such obstructions, or differences, should be brought to the attention of the owner's authorized representative. In the event this notification is not performed, the irrigation contractor shall assume full responsibility for any revisions necessary.

Irrigation contractor shall repair or replace all items damaged by their work. Irrigation contractor shall coordinate their work with other contractors for the location and installation of pipe sleeves and laterals through walls, under roadways and paving, etc.

The contractor shall take immediate steps to repair, replace, or restore all services to any utilities which are disrupted due to their operations. All costs involved in disruption of service and repairs due to negligence on the part of the contractor shall be their responsibility.

POINT OF CONNECTION (P.O.C.)

The P.O.C. is a new line size X 2" tap, maximum of 10' of 2" polyethylene service line, a new 1-1/2" potable meter (install per North Miami Utility requirements) and a 1-1/2" pressure vacuum breaker. The P.O.C. must be capable of delivering a minimum of 50 GPM at 50 PSI downstream of the water meter.

Contractor to verify these minimum conditions can be met prior to ordering of materials and the beginning of installation. If the conditions can not be met, the contractor must notify the designer prior to proceeding with the work. If the contractor does not do so, the contractor proceeds at their own risk and becomes responsible for any future work required to make the system perform as required.

THE PIPE

Pipe locations shown on the plan are schematic and shall be adjusted in the field. When laying out mainlines place a maximum of 18" away from either the back of curb, front of walk, back of walk, or other hardscape to allow for ease in locating and protection from physical damage. Install all lateral pipe near edges of pavement or against buildings whenever possible to allow space for plant root balls. Always install piping inside project property's boundary.

All pipes are to be placed in planting beds. If it is necessary to have piping under hardscapes, such as roads, walks, and patios, the pipes must be sleeved using Class 200 PVC with the sleeve diameter being twice the size of the pipe it is carrying with a minimum sleeve size of 2".

Pipe sizes shall conform to those shown on the drawings. No substitutions of smaller pipe sizes shall be permitted, but substitutions of larger sizes may be approved. All damaged and rejected pipe shall be removed from the site at the time of said rejection.

Mainline shall be Sch 40 solvent-weld PVC with Sch 40 PVC solvent-weld fittings (size per plan).

Contractor to ensure all mainline piping is properly restrained using mechanical joint fittings, restraining collars, threaded rods, thrust blocks, etc... as and where required. Contractor shall refer to pipe manufacturers recommended installation practices for further direction.

PVC pipe joint compound and primer: The PVC cement shall be Weld-On 711 (grey, slow-drying, heavy duty) and the primer shall be Weld-On P70 (purple tinted, compatible with cement), or approved equals.

ELECTRICAL POWER SUPPLY

Electrical supply for irrigation controllers & sensors to be provided by irrigation contractor. Contractor to coordinate with local utilities for the installation of, and connection to, site available power supplies for required electrical components as set forth in the irrigation plans.

All electrical work is to comply with the National Electrical Code and any, and all, other applicable electrical codes, laws and regulations. A licensed electrician shall perform all electrical hook-ups. Power for each controller/CCU shall be a dedicated 120 volt, 20 amp circuit unless otherwise specified in the plans. Power for each pump to be according to pump specifications indicated in these plans.

WIRING

Irrigation control wire shall be thermoplastic solid copper, single conductor, low voltage irrigation controller wire; suitable for direct burial and continuous operation at rated voltages.

Tape and bundle control wires every 10' and run alongside the mainline. At all turns in direction make a 2' coil of wire. At all valve boxes coil wire around a 3/4" piece of PVC pipe to make a coil using 30 linear inches of wire. Make electrical connections with 3MDBY/R connectors.

Number all wires, using an electrical book of numbers, according to the plans. Number wires in all valve boxes, junction boxes and at the controller.

Wire sized, numbered and colored as follows:
#14 white for common
#14 spare black common
#14 individual color coded hot wire
#14 spare yellow hot wire

Spare wires
Leaving controller, run two spare wires in both directions (four spare wires total). Install as 2 common spares (4 total) and 2 hot wires (4 total). Loop these wires into each RCV along their path and terminate in the last valve box controlled by the wires respective controller. The loop into each valve box shall extend up into the valve box a minimum of 8" and be readily accessible by opening the valve box lid. These wires must be all numbered and color coded as required in these plans.

Controller and Pump station Control Panel grounding – Contractor to utilize 4"X8"X5/8" copper grounding plates, 5/8"X10' copper clad grounding rods, 'One Strike' CAD wells at all connection points, #6 insulated copper wire, and earth contact material. Install these and other required components as outlined in the detail. Contractor to verify that the earth to ground resistance does not exceed 10 ohms. Contractor shall provide a written certification, on a licensed electrical contractors letter head, showing the date of the test, controller/pump location, and test results. Each controller/pump shall be so grounded and tested. Each component must have its own separate grounding grid, unless they are sitting side by side, in which case up to two controllers can share a common grounding grid.

LAYOUT

Lay out irrigation system mainlines and lateral lines. Make the necessary adjustments as required to take into account all site obstructions and limitations prior to excavating trenches.

Stake all sprinkler head locations. Adjust location and make the necessary modifications to nozzle types, etc. required to ensure 100% head to head coverage. Refer to the Edge of Pavement Detail on the Irrigation Detail Sheet.

Spray heads shall be installed 4" from sidewalks or curbed roadways and 12" from uncurbed roadways and building foundations. Rotors shall be installed 4" from sidewalks or curbed roadways, 12" from building foundations, and 36" from uncurbed roadways.

Locate valves prior to excavation. Ensure that their location provides for easy access and that there is no interference with physical structures, plants, trees, poles, etc. Valve boxes must be placed a minimum of 12" and a maximum of 15" from the edge of pavement, curbs, etc. and the top of the box must be 2" above finish grade. No valve boxes shall be installed in turf areas without approval by the irrigation designer – only in shrub beds. Never install in sport field areas.

VALVES

Sequence all valves so that the farthest valve from the P.O.C. operates first and the closest to the P.O.C. operates last. The closest valve to the P.O.C. should be the last valve in the programmed sequence.

Adjust the flow control on each RCV to ensure shut off in 10 seconds after deactivation by the irrigation controller.

Using an electric branding iron, brand the valve I.D. letter/number on the lid of each valve box. This brand must be 2"-3" tall and easily legible.

EQUIPMENT

All pop-up heads and shrub risers shall be pressure compensating. All pop-up heads shall be mounted on flex-type swing joints. All rotors shall be installed with PVC triple swing joints unless otherwise detailed.

All sprinkler equipment, not otherwise detailed or specified on these plans, shall be installed as per manufacturer's recommendations and specifications, and according to local and state laws.

TRENCHING

Excavate straight and vertical trenches with smooth, flat or sloping bottoms. Trench width and depth should be sufficient to allow for the proper vertical and horizontal separation between piping as shown in the pipe installation detail on the detail sheet.

Protect existing landscaped areas. Remove and replant any damaged plant material upon job completion. The replacement material shall be of the same genus and species, and of the same size as the material it is replacing. The final determination as to what needs to be replaced and the acceptability of the replacement material shall be solely up to the owner or owner's representative.

INSTALLATION

Solvent Weld Pipe: Cut all pipe square and deburr. Clean pipe and fittings of foreign material; then apply a small amount of primer while ensuring that any excess is wiped off immediately. Primer should not puddle or drip from pipe or fittings. Next apply a thin coat of PVC cement; first apply a thin layer to the pipe, next a thin layer inside the fitting, and finally another very thin layer on the pipe. Insert the pipe into the fitting. Insure that the pipe is inserted to the bottom of the fitting, then turn the pipe a 1/4 turn and hold for 10 seconds. Make sure that the pipe doesn't recede from the fitting. If the pipe isn't at the bottom of the fitting upon completion, the glue joint is unacceptable and must be discarded.

Pipes must cure a minimum of 30 minutes prior to handling and placing into trenches. A longer curing time may be required; refer to the manufacturer's specifications. The pipe must cure a minimum of 24 hours prior to filling with water.

BACK FILL

The Back fill 6" below, 6" above, and around all piping shall be of clean sand and anything beyond that in the trench can be of native material but nothing larger than 2" in diameter.

Main line pipe depth measured to the top of pipe shall be:
24" minimum for 3/4"-2 1/2" PVC with a 30" minimum at vehicular crossings

Lateral line depths measured to top of pipe shall be:
18" minimum for 3/4"-3" PVC with a 30" minimum at vehicular crossings

Contractor shall backfill all piping, both mainline and laterals, prior to performing any pressure tests. The pipe shall be backfilled with the exception of 2' on each side of every joint (bell fittings, 90's, tees, 45's, etc.). These joints shall not be backfilled until all piping has satisfactorily passed its appropriate pressure test as outlined below.

FLUSHING

Prior to the placement of valves, flush all mainlines for a minimum of 10 minutes or until lines are completely clean of debris, whichever is longer.

Prior to the placement of heads, flush all lateral lines for a minimum of 10 minutes or until lines are completely clean of debris, whichever is longer.

Use screens in heads and adjust heads for proper coverage avoiding excess water on walls, walks and paving.

TESTING

Soil: At a minimum of 2 locations on the site, soil tests for infiltration and texture shall be performed according to the USDA Soil Quality Test Kit Guide. The tests shall be documented in a USDA Soil Worksheet. (All of the above is available at http://soils.usda.gov/sqi/assessment/ test_kit.html) The completed worksheet shall be submitted to the owners representative for review/approval. Do not proceed without written direction from the owner/owner's representative.

Schedule testing with Owner's Representative a minimum of three (3) days in advance of testing.

Mainline: Remove all remote control valves and cap using a threaded cap on SCH 80 nipple. Hose bibs and gate valves shall not be tested against during a pressure test unless authorized by written permission from the owner. Fill mainline with water and pressurize the system to 125 PSI. Monitor the system pressure at two gauge locations; the gauge locations must be at opposite ends of the mainline. With the same respective pressures, monitor the gauges for two hours. There can be no loss in pressure at either gauge for solvent-welded pipe.

If these parameters are exceeded, locate the problem; repair it; wait 24 hours and retry the test. This procedure must be followed until the mainline passes the test.

Lateral Lines: The lateral lines must be fully filled to operational pressure and visually checked for leaks. Any leaks detected must be repaired.

Operational Testing –Once the mainline and lateral lines have passed their respective tests, and the system is completely operational, a coverage test and demonstration of the system is required. The irrigation contractor must demonstrate to the owner, or his/her representative, that proper coverage is obtained and the system works automatically from the controller. This demonstration requires each zone to be turned on, in the proper sequence as shown on the plans, from the controller. Each zone will be inspected for proper coverage and function. The determination of proper coverage and function is at the sole discretion of the owner or owner's representative.

Upon completion of the operational test, run each zone until water begins to puddle or run off. This will allow you to determine the number of irrigation start times necessary to meet the weekly evapotranspiration requirements of the planting material in each zone. In fine sandy soils, it is possible no puddling will occur. If this is experienced, then theoretical calculations for run times will be required for controller programming.

SUBMITTALS

Pre-Construction: Deliver five (5) copies of submittals to Owner's Representative within ten (10) working days from date of Notice to Proceed. Furnish information in 3-ring binder with table of contents and index sheet. Index sections for different components and label with specification section number and name of component. Furnish submittals for components on material list. Indicate which items are being supplied on catalog cut sheets when multiple items are shown on one sheet. Incomplete submittals will be returned without review. In lieu of hardcopies, an electronic package in PDF format can be submitted.

After project completion:
As a condition of final acceptance, the irrigation contractor shall provide the owner with:

1. Irrigations As-builts – shall be provided utilizing a sub-foot Global Navigation Satellite System (GNSS) to accurately locate all mainlines, sleeves, remote control valves, gate valves, independent wire runs, wire splice boxes, controllers, high voltage supply sources/conduit path, control mechanisms, sensors, wells and water source connections in Florida East State Plane, NAD 83, and CORS 96 format. The data collected shall be in POINT format and include an ID for each data point with Manufacturer, Type, Size, and Depth. All mainline and independent runs of wire shall be located every 30' for straight runs and at every change of direction. Sleeves will be located at end points and every 20' of length. All underground items shall include depth in inch format. These POINTS once collected shall be imported into an AutoCAD DWG geo-referenced base file to be labeled accordingly. The completed AS-Built shall be a Geo-Referenced DWF file and delivered to the owner on a compact disk (CD).
2. Controller charts – Upon completion of "as-built" prepare controller charts; one per controller. Indicate on each chart the area controlled by a remote control valve (using a different color for each zone). This chart shall be reduced to a size that will fit inside of the controller door. The reduction shall be hermetically sealed inside two 2ml pieces of clear plastic.
3. Grounding Certification – Provide ground certification results for each controller and pump panel grounding grid installed. This must be on a licensed electrician letter head indicating location tested (using IR plan symbols), date, time, test method, and testing results.

INSPECTIONS AND COORDINATION MEETINGS REQUIRED – Contractor is required to schedule, perform, and attend the following, and demonstrate to the owner and/or owners representative to their satisfaction, as follows:

1. Pre-construction meeting – Designer and contractor to review entire install process and schedule with owner/general contractor.
2. Mainline installation inspection(s) – all mainline must be inspected for proper pipe, fittings, depth of coverage, backfill. and installation method
3. Mainline pressure test – All mainline shall be pressure tested according to this design's requirements
4. Flow Meter calibration – All flow meters must be calibrated, provide certified calibration report for all flow meters.
5. USDA Soil Quality Tests for infiltration/texture
6. Coverage and operational test
7. Final inspection
8. Punch list inspection

FINAL ACCEPTANCE

Final acceptance of the irrigation system will be given after the following documents and conditions have been completed and approved. Final payment will not be released until these conditions are satisfied.

1. All above inspections are completed, documented, and approved by owner.
2. Completion and acceptance of 'as-built' drawings.
3. Acceptance of required controller charts and placement inside of controllers.
4. All other submittals have be made to the satisfaction of the owner.

GUARANTEE: The irrigation system shall be guaranteed for a minimum of one calendar year from the time of final acceptance.

MINIMUM RECOMMENDED
IRRIGATION MAINTENANCE PROCEDURES

1. Every irrigation zone should be checked monthly and written reports generated describing the date(s) each zone was inspected, problems identified, date problems repaired, and a list of materials used in the repair. At minimum, these inspections should include the following tasks:

A. Turn on each zone from the controller to verify automatic operation.

B. Check schedules to ensure they are appropriate for the season, plant and soil type, and irrigation method. Consult an I.A. certified auditor for methods used in determining proper irrigation scheduling requirements.

C. Check remote control valve to ensure proper operation.

D. Check setting on pressure regulator to verify proper setting, if present.

E. Check flow control and adjust as needed; ensure valve closure within 10-15 seconds after deactivation by controller.

F. Check for leaks – mainline, lateral lines, valves, heads, etc.

G. Check all heads as follows:

1. Proper set height (top of sprinkler is 1" below mow height)
2. Verify head pop-up height – 6" in turf, 12" in ground cover, and pop-up on riser in shrub beds.
3. Check wiper seal for leaks – if leaking, clean head and re-inspect.
4. If still leaking, replace head with the appropriate head with pressure regulator and built-in check valve.
5. All nozzles checked for proper pattern, clogging, leaks, correct make & model, etc. – replace as needed
6. Check for proper alignment – perfectly vertical; coverage area is correct; minimize over spray onto hardscapes.
7. Riser height raised/lowered to accommodate plant growth patterns and ensure proper coverage.
8. Verify the pop-up riser retracts after operation. If not, repair/replace as needed.

H. Check controller/C.C.U. grounds for resistance (10 ohms or less) once per year. Submit written reports.

I. Check rain shut-off device monthly to ensure it functions properly.

J. Inspect all filters monthly and clean/repair/replace as needed.

K. Inspect backflow devices by utilizing a properly licensed backflow inspector. This should be done annually, at minimum.

L. Inspect all valve boxes to ensure they are in good condition, lids are in place and locked.

M. Check pump stations for proper operation, pressures, filtration, settings, etc. – refer to pump station operations manual.

N. Check and clean intake screens on all suction lines quarterly, at minimum. Clean and/or repair, as needed.

O. Winterize, if applicable, as weather in your area dictates. Follow manufacturer recommendations and blow out all lines and equipment using compressed air. Perform seasonal startup of system as per manufacturer recommendations.

P. Conduct additional inspections, maintenance tasks, etc. that are particular for your site.

Soil Moisture Sensor

1. Place all soil moisture sensor wiring in 1" SCH 40 PVC conduit
2. Soil moisture sensor should be placed in the middle of a spray or drip area as per manufacturer's recommendations.

CRAVEN • THOMPSON AND ASSOCIATES, INC.
ENGINEERS • PLANNERS • SURVEYORS
3563 N.W. 53RD STREET, FORT LAUDERDALE, FLORIDA 33309
FAX: (954) 739-6409 TEL.: (954) 739-6400
FLORIDA LICENSED ENGINEERING, SURVEYING & MAPPING BUSINESS No. 271
FLORIDA LICENSED LANDSCAPE ARCHITECTURE BUSINESS No. C000114

Masuen Consulting LLC
Water Resource Consultants
5079 North Dixie Highway, #323
Oakland Park, FL 33334
Telephone (866) 928-1533
Fax (800) 928-1534

NO.	DATE	ISSUED FOR	BY
1	07/24/15	REQUEST FOR PROPOSAL	G.A.B.

DESIGNED JMJ
DRAWN JMJ
CHECKED TKM
PROJ. ENGR. DJS

Douglas J. Schultz LA
No. LA6666937

HAZEN AND SAWYER
Environmental Engineers & Scientists
4000 Hollywood Boulevard, Suite 750N
Hollywood, Florida 33021
Certificate of Authorization Number: 2771

SCALE 1"=20'-0"

CLIENTS PROJECT: –
ENGINEERS PROJECT: 44238-004
CAD REFERENCE: 44238-004BP3-IR4

NORTH MIAMI FLORIDA
CITY OF NORTH MIAMI
PUBLIC WORKS UTILITIES

WINSON WATER TREATMENT PLANT
RELIABILITY IMPROVEMENTS – VOLUME C: WTP REHAB

IRRIGATION NOTES

DATE: JULY 2015
SHEET: 335 OF 335
DRAWING: IR-4

PERMITTING