CITY OF NORTH MIAMI

PUBLIC WORKS UTILITIES

WINSON WATER TREATMENT PLANT

RELIABILITY IMPROVEMENTS
VOLUME C: WTP REHAB

VOLUME C: ARCHITECTURAL, INSTRUMENTATION, ELECTRICAL, HVAC, PLUMBING, LANDSCAPING, AND IRRIGATION

NORTH MIAMI
FLORIDA

HAZEN AND SAWYER
Environmental Engineers & Scientists
4000 Hollywood Boulevard, Suite 750N
Hollywood, Florida 33021
Certificate of Authorization Number: 2771

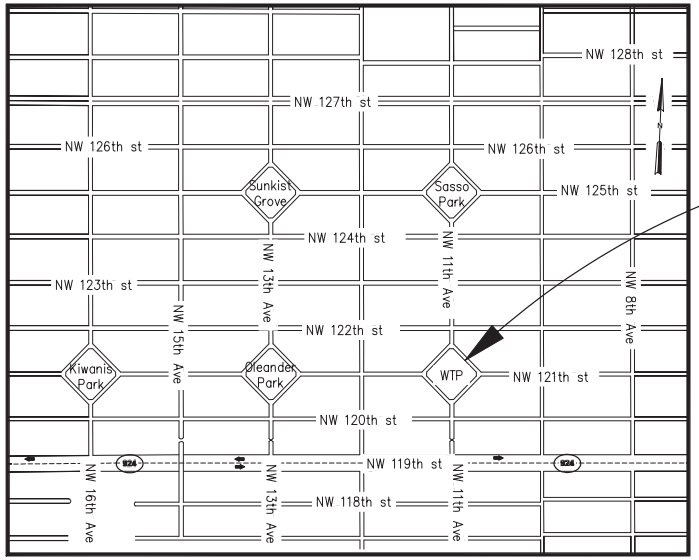

PROJECT LOCATION:
12098 NORTHWEST 11th AVE
NORTH MIAMI, FLORIDA 33168

LOCATION MAP
NOT TO SCALE

JULY 2015
REQUEST FOR PROPOSAL

TITLE SHEET AND LOCATION MAP
SHEET 1 OF 335
DRAWING No. G-01

H&S PROJECT No.44238-004 – VOLUME C – WTP REHAB
REQUEST FOR PROPOSAL

PLOT DATE: 7/29/2015 2:58 PM BY: TBOCAS
XREF= ..\..\Base\Location_Map
File = H:\44238-004\Drawings\design build package\volume c – wtp rehab\Bid Package 3 – WTP Rehab\General\44238-004BP3-001 Saved by tbocas Save date = 7/24/2015 8:47 AM

LIST OF DRAWINGS
VOLUME A : FILTER REHAB

SHEET NUMBER	SHEET TITLE	SHEET DESCRIPTION
		GENERAL
1	G-01	COVER SHEET
2	G-02	LIST OF DRAWINGS SHEET 1
3	G-03	LIST OF DRAWINGS SHEET 2
4	G-04	LIST OF DRAWINGS SHEET 3
5	G-05	ABBREVIATIONS, SYMBOLS AND LEGEND
		CIVIL
6	C-01	EXISTING SITE PLAN
7	C-02	STAGING PLAN AND PROJECT AREA LOCATION
8	C-03	CIVIL DETAILS
		MECHANICAL
9	M-01	EXISTING CONDITIONS LOWER PLAN
10	M-02	EXISTING CONDITIONS UPPER PLAN
11	M-03	EXISTING CONDITIONS PHOTOS – SHEET 1
12	M-04	EXISTING CONDITIONS PHOTOS – SHEET 2
13	M-05	EXISTING CONDITIONS PHOTOS – SHEET 3
14	M-06	EXISTING CONDITIONS PHOTOS – SHEET 4
15	M-07	FILTER DEMOLITION LOWER PLAN
16	M-08	FILTER POST-DEMOLITION LOWER PLAN
17	M-09	FILTER DEMOLITION UPPER PLAN
18	M-10	FILTER POST-DEMOLITION UPPER PLAN
19	M-11	FILTER DEMOLITION SECTION 1
20	M-12	FILTER POST-DEMOLITION SECTION 1
21	M-13	FILTER DEMOLITION SECTION 2
22	M-14	FILTER POST-DEMOLITION SECTION 2
23	M-15	FILTER DEMOLITION SECTION 3
24	M-16	FILTER POST-DEMOLITION SECTION 3
25	M-17	MECHANICAL PIPING SCHEMATIC
26	M-18	PROPOSED FILTERS LOWER PLAN AND LIFE SAFETY PLAN
27	M-19	PROPOSED FILTERS UPPER PLAN
28	M-20	PROPOSED FILTERS SECTION 1 AND HEAD ROOM CLEARANCE
29	M-21	PROPOSED FILTERS SECTION 2
30	M-22	PROPOSED FILTERS SECTION 3
31	M-23	PROPOSED FILTERS SECTION 4
32	M-24	DETAILS – SHEET 1
33	M-25	DETAILS – SHEET 2
		INSTRUMENTATION
34	I-01	SYMBOLS AND LEGEND
35	I-02	BLOCK DIAGRAM
36	I-03	PROCESS AND INSTRUMENTATION DIAGRAM FILTER NO. 1
37	I-04	PROCESS AND INSTRUMENTATION DIAGRAM FILTER NO. 2
38	I-05	PROCESS AND INSTRUMENTATION DIAGRAM FILTER NO. 3
39	I-06	PROCESS AND INSTRUMENTATION DIAGRAM FILTER NO. 4
40	I-07	INSTRUMENTATION DETAILS SHEET 1
41	I-08	INSTRUMENTATION DETAILS SHEET 2

SHEET NUMBER	SHEET TITLE	SHEET DESCRIPTION
		STRUCTURAL
42	S-01	GENERAL NOTES
43	S-02	EXISTING CONDITIONS LOWER PLAN
44	S-03	EXISTING CONDITIONS UPPER PLAN
45	S-04	EXISTING CONDITIONS PHOTOS
46	S-05	FILTER DEMOLITION LOWER PLAN
47	S-06	FILTER DEMOLITION UPPER PLAN
48	S-07	FILTER DEMOLITION SECTION 1
49	S-08	FILTER DEMOLITION SECTION 2
50	S-09	PROPOSED FILTERS LOWER PLAN
51	S-10	PROPOSED FILTERS UPPER PLAN
52	S-11	SECTIONS
53	S-12	DETAILS – SHEET 1
54	S-13	DETAILS – SHEET 2
55	S-14	DETAILS – SHEET 3
56	S-15	DETAILS – SHEET 4
		ELECTRICAL
57	E-01	ELECTRICAL LEGEND AND NOTES
58	E-02	GENERAL NOTES AND SPECIFICATIONS
59	E-03	ELECTRICAL SITE PLAN
60	E-04	ELECTRICAL DEMOLITION
61	E-05	ELECTRICAL PLAN PIPE GALLERY LOWER PLAN
62	E-06	ELECTRICAL PLAN PIPE GALLERY UPPER PLAN
63	E-07	ELECTRICAL PLAN SECOND FLOOR
64	E-08	EXISTING SINGLE LINE DIAGRAM
65	E-09	PROPOSED SINGLE LINE DIAGRAM
66	E-10	CONDUIT AND WIRE SCHEDULES
67	E-11	PANEL AND FIXTURE SCHEDULES
68	E-12	MISCELLANEOUS ELECTRICAL STANDARD DETAILS SHEET 1
69	E-13	MISCELLANEOUS ELECTRICAL STANDARD DETAILS SHEET 2

NO.	DATE	ISSUED FOR	BY
1	07/24/15	REQUEST FOR PROPOSAL	G.A.B.

DESIGNED G.A.B.
DRAWN L.M.S.
CHECKED G.N.C.
PROJ. ENGR. G.A.B.

GEORGE A. BROWN P.E.
No. 56076

HAZEN AND SAWYER
Environmental Engineers & Scientists
4000 Hollywood Boulevard, Suite 750N
Hollywood, Florida 33021
Certificate of Authorization Number: 2771

SCALE N.T.S.

CLIENTS PROJECT: –
ENGINEERS PROJECT: 44238-004
CAD REFERENCE:44238-004BP3-G02A

NORTH MIAMI FLORIDA
CITY OF NORTH MIAMI
PUBLIC WORKS UTILITIES

WINSON WATER TREATMENT PLANT
RELIABILITY IMPROVEMENTS – VOLUME C: WTP REHAB
LIST OF DRAWINGS
SHEET 1

DATE: JULY 2015
SHEET: 2A OF 335
DRAWING: G-2A

REQUEST FOR PROPOSAL

PLOT DATE: 7/29/2015 2:56 PM BY: TBOCAS
XREFs= ..\Tblock\44238-004-BP3-TB
File = H:\44238-004\Drawings\design build package\volume c - wtp rehab\Bid Package 3 - WTP Rehab\General\44238-004BP3-G02A Saved by tbocas Save date = 7/29/2015 2:56 PM

LIST OF DRAWINGS
VOLUME B : WTP REHAB

SHEET NUMBER	SHEET TITLE	SHEET DESCRIPTION
		GENERAL
1	G-01	COVER SHEET
2A	G-2A	LIST OF DRAWINGS SHEET 1
2	G-02	LIST OF DRAWINGS SHEET 2
3	G-03	LIST OF DRAWINGS SHEET 3
4	G-04	ABBREVIATIONS, SYMBOLS AND LEGEND
5	G-05	GENERAL NOTES
6	G-06	EXISTING SITE PLAN
7	G-07	EXISTING SITE AERIAL AND ZONING MAP
8	G-08	PROPOSED SITE PLAN
9	G-09	PROPOSED STAGING PLAN – PHASE I
10	G-10	PROPOSED STAGING PLAN DEMOLITION PLAN – PHASE I
11	G-11	PROPOSED STAGING PLAN CONSTRUCTION PLAN – PHASE I
12	G-12	PROPOSED STAGING PLAN PHASES II, III & IV
13	G-13	PROPOSED STAGING PLAN DEMOLITION AND CONSTRUCTION PLAN – PHASE II
14	G-14	PROPOSED STAGING PLAN DEMOLITION PLAN – PHASE III
15	G-15	PROPOSED STAGING PLAN CONSTRUCTION PLAN – PHASE III
16	G-16	PROPOSED STAGING PLAN DEMOLITION PLAN – PHASE IV
17	G-17	PROPOSED STAGING PLAN CONSTRUCTION PLAN – PHASE IV
		CIVIL
18	C-01	YARD PIPING – EXISTING PLAN
19	C-02	YARD PIPING – DEMOLITION PLAN SEQUENCING
20	C-03	YARD PIPING – PROPOSED PLAN
21	C-04	YARD PIPING – DETAILS SHEET 1
22	C-05	YARD PIPING – DETAILS SHEET 2
23	C-06	YARD PIPING – DETAILS SHEET 3
24	C-07	YARD PIPING – DETAILS SHEET 4
25	C-08	YARD PIPING – DETAILS SHEET 5
26	C-09	PAVING, GRADING & DRAINAGE EXISTING PLAN
27	C-10	PAVING, GRADING & DRAINAGE EXISTING CONDITION PHOTOS
28	C-11	PAVEMENT MARKING AND SIGNAGE PLAN
29	C-12	SITE PLAN DETAILS
30	C-13	SETBACK PLAN
31	C-14	PAVING, GRADING & DRAINAGE PROPOSED PLAN
32	C-15	SWALES DRAINAGE PROPOSED PLAN
33	C-16	GATE NO. 1
34	C-17	GATE NO. 2
35	C-18	GATE NO. 3
36	C-19	GATE NO. 5
37	C-20	GATE NO. 6
38	C-21	PAVING, GRADING & DRAINAGE SECTIONS – SHEET 1
39	C-22	PAVING, GRADING & DRAINAGE SECTIONS – SHEET 2
40	C-23	PAVING, GRADING & DRAINAGE SECTIONS – SHEET 3
41	C-24	PAVING, GRADING & DRAINAGE SECTIONS – SHEET 4
42	C-25	PAVING, GRADING & DRAINAGE SECTIONS – SHEET 5
43	C-26	PAVING, GRADING & DRAINAGE SECTIONS – SHEET 6
44	C-27	BREEZEWAY PLANS AND DETAILS
45	C-28	CIVIL DETAILS SHEET 1
46	C-29	CIVIL DETAILS SHEET 2
47	C-30	CIVIL DETAILS SHEET 3
48	C-31	CIVIL DETAILS SHEET 4
49	C-32	CIVIL DETAILS SHEET 5
50	C-33	CIVIL DETAILS SHEET 6
51	C-34	CIVIL DETAILS SHEET 7
52	C-35	CIVIL DETAILS SHEET 8
53	C-36	CIVIL DETAILS SHEET 9
54	C-37	CIVIL DETAILS SHEET 10
55	C-38	CIVIL DETAILS SHEET 11
56	C-39	CIVIL DETAILS SHEET 12
57	C-40	CIVIL DETAILS SHEET 13
58	C-41	CIVIL DETAILS SHEET 14
59	C-42	CIVIL DETAILS SHEET 15
60	C-43	CIVIL DETAILS SHEET 16
61	C-44	CIVIL DETAILS SHEET 17
		MECHANICAL
62	M-01	EXISTING PROCESS FLOW DIAGRAM
63	M-02	PROPOSED PROCESS FLOW DIAGRAM
64	M-03	DEMOLITION AERIAL PLAN KEY PLAN
65	M-04	RAW WATER WELL NO. 1 DEMOLITION PLAN AND PHOTOS
66	M-05	RAW WATER WELL NO. 2 DEMOLITION PLAN AND PHOTOS
67	M-06	LIME CONTACTOR REHABILITATION DEMOLITION PLAN
68	M-07	LIME CONTACTOR REHABILITATION DEMOLITION PHOTOS – SHEET 1
69	M-08	LIME CONTACTOR REHABILITATION DEMOLITION PHOTOS – SHEET 2
70	M-09	LIME CONTACTOR REHABILITATION DEMOLITION PHOTOS – SHEET 3
71	M-10	LIME CONTACTOR REHABILITATION DEMOLITION PHOTOS – SHEET 4
72	M-11	LIME CONTACTOR REHABILITATION DEMOLITION PHOTOS – SHEET 5
73	M-12	LIME SLAKER AND SILO MODIFICATIONS DEMOLITION PLAN
74	M-13	LIME SLAKER AND SILO MODIFICATIONS DEMOLITION PHOTOS
75	M-14	HIGH SERVICE PUMP STATION DEMOLITION PLAN
76	M-15	HIGH SERVICE PUMP STATION DEMOLITION PHOTOS – SHEET 1
77	M-16	HIGH SERVICE PUMP STATION DEMOLITION PHOTOS – SHEET 2
78	M-17	HIGH SERVICE PUMP STATION DEMOLITION PHOTOS – SHEET 3
79	M-18	HIGH SERVICE PUMP STATION DEMOLITION PHOTOS – SHEET 4
80	M-19	BACKWASH & WASTE SLUDGE HOLDING BASIN DEMOLITION PLAN
81	M-20	BACKWASH & WASTE SLUDGE HOLDING BASIN DEMOLITION PHOTOS – SHEET 1
82	M-21	BACKWASH & WASTE SLUDGE HOLDING BASIN DEMOLITION PHOTOS – SHEET 2
83	M-22	BACKWASH & WASTE SLUDGE HOLDING BASIN DEMOLITION PHOTOS – SHEET 3
84	M-23	WATER STORAGE TANK 0.75 MG EXISTING PLAN
85	M-24	WATER STORAGE TANK 0.75 MG AND LP TANK PHOTOS
86	M-25	WATER STORAGE TANK 1.5 MG DEMOLITION PLAN
87	M-26	WATER STORAGE TANK 1.5 MG DEMOLITION PHOTOS
88	M-27	SODIUM HYPOCHLORITE FACILITY DEMOLITION PLAN
89	M-28	SODIUM HYPOCHLORITE FACILITY DEMOLITION PHOTOS
90	M-29	COAGULANT FEED SYSTEM DEMOLITION PLAN AND PHOTOS
91	M-30	FLUORIDE FEED SYSTEM DEMOLITION PLAN AND PHOTOS
92	M-31	AMMONIA FEED SYSTEM DEMOLITION PLAN AND PHOTOS
93	M-32	RAW WATER WELL NO. 1 PROPOSED PLAN, SECTIONS AND DETAILS
94	M-33	RAW WATER WELL NO. 2 PROPOSED PLAN, SECTIONS AND DETAILS
95	M-34	RAW WATER WELL DETAILS
96	M-35	LIME CONTACTOR REHABILITATION PROPOSED PLAN
97	M-36	LIME CONTACTOR REHABILITATION SECTIONS AND DETAILS
98	M-37	LIME CONTACTOR REHABILITATION SECTIONS AND DETAILS
99	M-38	LIME CONTACTOR REHABILITATION DETAILS
100	M-39	LIME CONTACTOR REHABILITATION SECTIONS AND DETAILS
101	M-40	LIME SLAKER AND SILO MODIFICATIONS PLAN
102	M-41	LIME SLAKER AND SILO MODIFICATIONS PLANS
103	M-42	LIME SLAKER AND SILO MODIFICATIONS SECTION AND DETAILS
104	M-43	LIME SLAKER AND SILO MODIFICATIONS DIAGRAMS
105	M-44	MASTER PUMP STATION KEY PLAN
106	M-45	HIGH SERVICE PUMPS PLAN
107	M-46	BACKWASH AND TRANSFER PUMPS PLAN
108	M-47	MASTER PUMP STATION SECTIONS AND DETAILS
109	M-48	MASTER PUMP STATION SECTIONS
110	M-49	MASTER PUMP STATION SECTIONS AND DETAILS
111	M-50	INTERIM CHEMICAL STORAGE AND FEED SYSTEMS
112	M-51	CHEMICAL HANDLING FACILITY KEY PLAN AND SIGNAGE
113	M-52	CHEMICAL HANDLING FACILITY ANTI-COAGULANT AND COAGULANT AID
114	M-53	CHEMICAL HANDLING FACILITY FLUORIDE AND AQUEOUS AMMONIA
115	M-54	CHEMICAL HANDLING FACILITY SECTIONS
116	M-55	CHEMICAL HANDLING FACILITY SECTIONS AND DETAILS
117	M-56	BACKWASH HOLDING BASIN PROPOSED PLAN
118	M-57	BACKWASH HOLDING BASIN SECTIONS AND DETAILS
119	M-58	BACKWASH BASIN SLUDGE PUMP PLAN AND SECTIONS
120	M-59	BACKWASH BASIN DECANT PUMP PLAN AND SECTIONS
121	M-60	WASTE LIME SLUDGE PUMP STATION PLAN AND DETAILS
122	M-61	WASTE LIME SLUDGE PUMP STATION SECTIONS
123	M-62	SODIUM HYPOCHLORITE FACILITIES PROPOSED PLAN
124	M-63	SODIUM HYPOCHLORITE FACILITIES SECTIONS – SHEET 1
125	M-64	SODIUM HYPOCHLORITE FACILITIES SECTIONS – SHEET 2
126	M-65	SODIUM HYPOCHLORITE FACILITIES SECTIONS – SHEET 3
127	M-66	SODIUM HYPOCHLORITE FACILITIES DETAILS
128	M-67	SAMPLE PUMP DETAILS
129	M-68	EXISTING FILTER CONTROL ROOM WATER QUALITY ANALYZERS
130	M-69	EXISTING FILTER CONTROL ROOM WATER QUALITY ANALYZERS – SECTION
131	M-70	EXISTING FILTERS HYPOCHLORITE INJECTION
132	M-71	MECHANICAL DETAILS – SHEET 1
133	M-72	MECHANICAL DETAILS – SHEET 2
134	M-73	MECHANICAL DETAILS – SHEET 3
135	M-74	MECHANICAL DETAILS – SHEET 4
136	M-75	MECHANICAL DETAILS – SHEET 5
137	M-76	MECHANICAL DETAILS – SHEET 6
138	M-77	MECHANICAL DETAILS – SHEET 7
139	M-78	MECHANICAL DETAILS – SHEET 8
140	M-79	MECHANICAL DETAILS SHEET 9
		STRUCTURAL
141	S-01	GENERAL STRUCTURAL NOTES
142	S-02	NEW ADMINISTRATION BUILDING FOUNDATION PLAN
143	S-03	NEW ADMINISTRATION BUILDING FIRST FLOOR PLAN
144	S-04	NEW ADMINISTRATION BUILDING SECOND FLOOR PLAN
145	S-05	NEW ADMINISTRATION BUILDING ROOF PLAN
146	S-06	NEW ADMINISTRATION BUILDING ROOF TRUSS PLANS
147	S-07	NEW ADMINISTRATION BUILDING ACCESS AND SIDEWALK
148	S-08	NEW ADMINISTRATION BUILDING SECTIONS SHEET 1
149	S-09	NEW ADMINISTRATION BUILDING SECTIONS SHEET 2
150	S-10	NEW ADMINISTRATION BUILDING DETAILS SHEET 1
151	S-11	NEW ADMINISTRATION BUILDING DETAILS SHEET 2
152	S-12	NEW ADMINISTRATION BUILDING BEAM AND COLUMN SCHEDULES
153	S-13	AERATOR EXISTING PLAN AND PHOTOS
154	S-14	AERATOR SUPPORT STRUCTURE IMPROVEMENTS PLAN AND SECTIONS
155	S-15	AERATOR MIST PANEL IMPROVEMENTS SECTIONS AND DETAILS
156	S-16	AERATOR/LIME CONTACTOR ACCESS STAIRS SECTIONS AND DETAILS –SHEET 1
157	S-17	AERATOR/LIME CONTACTOR ACCESS STAIRS SECTIONS AND DETAILS –SHEET 2
158	S-18	AERATOR/LIME CONTACTOR ACCESS STAIRS SECTIONS AND DETAILS –SHEET 3
159	S-19	LIME SLAKER AND SILO MODIFICATIONS PLANS
160	S-20	LIME SLAKER AND SILO MODIFICATIONS SECTIONS AND DETAILS
161	S-21	WASTE LIME SLUDGE PUMP STATION PROPOSED PLAN, SECTIONS AND DETAILS
162	S-22	EXISTING FILTER CONTROL ROOM STAIRS PLAN
163	S-23	FILTER/OPS BUILDINGS STAIRS ELEVATIONS AND DETAILS
164	S-24	HIGH SERVICE PUMP STATION AND ELECTRICAL ROOM 1 STRUCTURAL MODIFICATIONS – SHEET 1
165	S-25	HIGH SERVICE PUMP STATION AND ELECTRICAL ROOM 1 STRUCTURAL MODIFICATIONS – SHEET 2
166	S-26	HIGH SERVICE PUMP STATION AND ELECTRICAL ROOM 1 STRUCTURAL MODIFICATIONS – SHEET 3
167	S-27	MASTER PUMP STATION PROPOSED PLAN
168	S-28	MASTER PUMP STATION SECTIONS AND DETAILS
169	S-29	MASTER PUMP STATION SECTIONS
170	S-30	CHEMICAL HANDLING FACILITY PROPOSED PLAN
171	S-31	CHEMICAL HANDLING FACILITY SECTIONS AND DETAILS SHEET 1
172	S-32	CHEMICAL HANDLING FACILITY SECTIONS AND DETAILS SHEET 2
173	S-33	CHEMICAL HANDLING FACILITY SECTIONS AND DETAILS SHEET 3
174	S-34	BACKWASH HOLDING BASIN DEMOLITION PLAN
175	S-35	BACKWASH HOLDING BASIN REHABILITATION PLANS AND DETAILS
176	S-36	BACKWASH HOLDING BASIN REHABILITATION DETAILS
177	S-37	SODIUM HYPOCHLORITE FACILITIES LIFE SAFETY AND PROPOSED PLANS
178	S-38	SODIUM HYPOCHLORITE FACILITIES SECTIONS AND DETAILS
179	S-39	SODIUM HYPOCHLORITE FACILITIES GRATING PLAN AND DETAILS
180	S-40	CHEMICAL INJECTION VAULT PLAN AND SECTION
181	S-41	CLEARWELL EXTENSION PLAN AND SECTION
182	S-42	STRUCTURAL DETAILS SHEET 1
183	S-43	STRUCTURAL DETAILS SHEET 2
184	S-44	STRUCTURAL DETAILS SHEET 3
185	S-45	STRUCTURAL DETAILS SHEET 4
186	S-46	STRUCTURAL DETAILS SHEET 5
187	S-47	STRUCTURAL DETAILS SHEET 6
188	S-48	STRUCTURAL DETAILS SHEET 7
189	S-49	STRUCTURAL DETAILS SHEET 8

NO.	DATE	ISSUED FOR	BY
1	07/24/15	REQUEST FOR PROPOSAL	G.A.B.

DESIGNED G.A.B.
DRAWN G.P.B.
CHECKED J.N.M.
PROJ. ENGR. G.A.B.

GEORGE A. BROWN P.E.
No. 56076

HAZEN AND SAWYER
Environmental Engineers & Scientists
4000 Hollywood Boulevard, Suite 750N
Hollywood, Florida 33021
Certificate of Authorization Number: 2771

SCALE NTS

CLIENTS PROJECT: –
ENGINEERS PROJECT: 44238-004
CAD REFERENCE: 44238-004BP3-G02

NORTH MIAMI FLORIDA
CITY OF NORTH MIAMI
PUBLIC WORKS UTILITIES

WINSON WATER TREATMENT PLANT
RELIABILITY IMPROVEMENTS – VOLUME C: WTP REHAB
LIST OF DRAWINGS
SHEET 2

DATE: JULY 2015
SHEET: 2 OF 335
DRAWING: G-02

REQUEST FOR PROPOSAL

PLOT DATE: 7/29/2015 2:56 PM BY: TBOCAS

XREFs= ..\Tblock\44238-004-BP3-TB

File = H:\44238-004\Drawings\design build package\volume c - wtp rehab\Bid Package 3 - WTP Rehab\General\44238-004BP3-G02 Saved by tbocas Save date = 7/29/2015 2:21 PM

LIST OF DRAWINGS
VOLUME C : WTP REHAB

SHEET NUMBER	SHEET TITLE	SHEET DESCRIPTION
		GENERAL
1	G-01	COVER SHEET
2A	G-2A	LIST OF DRAWINGS SHEET 1
2	G-02	LIST OF DRAWINGS SHEET 2
3	G-03	LIST OF DRAWINGS SHEET 3
		ARCHITECTURAL
190	A-01	NEW ADMINISTRATION BUILDING SCHEDULES
191	A-02	NEW ADMINISTRATION BUILDING LIFE SAFETY PLANS
192	A-03	NEW ADMINISTRATION BUILDING FIRST FLOOR PLAN
193	A-04	NEW ADMINISTRATION BUILDING SECOND FLOOR PLAN
194	A-05	NEW ADMINISTRATION BUILDING ROOF PLAN
195	A-06	NEW ADMINISTRATION BUILDING FIRST FLOOR REFLECTED CEILING PLAN
196	A-07	NEW ADMINISTRATION BUILDING SECOND FLOOR REFLECTED CEILING PLAN
197	A-08	NEW ADMINISTRATION BUILDING SOUTH AND EAST ELEVATIONS
198	A-09	NEW ADMINISTRATION BUILDING NORTH AND WEST ELEVATIONS
199	A-10	NEW ADMINISTRATION BUILDING WALL SECTIONS - SHEET 1
200	A-11	NEW ADMINISTRATION BUILDING WALL SECTIONS - SHEET 2
201	A-12	NEW ADMINISTRATION BUILDING ENLARGED FLOOR PLAN AND ELEVATIONS SHEET 1
202	A-13	NEW ADMINISTRATION BUILDING ENLARGED FLOOR PLAN AND ELEVATIONS SHEET 2
203	A-14	NEW ADMISTRATION BUILDING DETAILS
204	A-15	NEW ADMINISTRATION BUILDING FIRST FLOOR FURNITURE PLAN
205	A-16	NEW ADMINISTRATION BUILDING SECOND FLOOR FURNITURE PLAN
206	A-17	CHEMICAL HANDLING FACILITY LIFE SAFETY PLAN
207	A-18	CHEMICAL HANDLING FACILITY PROPOSED PLAN
208	A-19	CHEMICAL HANDLING FACILITY SECTIONS AND DETAILS
209	A-20	CHEMICAL HANDLING FACILITY SCHEDULES AND DETAILS
210	A-21	EXISTING WTP EXTERIOR PAINTING
211	A-22	STANDARD ARCHITECTURAL DETAILS SHEET 1
212	A-23	STANDARD ARCHITECTURAL DETAILS SHEET 2
213	A-24	STANDARD ARCHITECTURAL DETAILS SHEET 3
214	A-25	STANDARD ARCHITECTURAL DETAILS SHEET 4
215	A-26	FIRESTOPPING DETAILS
		INSTRUMENTATION
216	I-1	SYMBOLS AND LEGEND
217	I-2	SYSTEM BLOCK DIAGRAM
218	I-3	NEW ADMINISTRATION BUILDING CONTROL ROOM LAYOUT
219	I-4	ON-SITE PRODUCTION WELLS AND AERATOR
220	I-5	LIME CONTACTOR AND WASTE SLUDGE BLOWDOWN
221	I-6	LIME SLAKING SYSTEM NO. 1
222	I-7	LIME SLAKING SYSTEM NO. 2
223	I-8	FILTERS (FROM BP 1)
224	I-9	MASTER PUMP STATION BACKWASH AND TRANSFER PUMPS
225	I-10	MASTER PUMP STATION HIGH SERVICE PUMPS
226	I-11	CHEMICAL HANDLING FACILITY AMMONIA FEED SYSTEMS
227	I-12	CHEMICAL HANDLING FACILITY - FLUORIDE FEED SYSTEMS
228	I-13	CHEMICAL HANDLING FACILITY COAGULANT FEED SYSTEM
229	I-14	CHEMICAL HANDLING FACILITY - ANTI-COAGULANT FEED SYSTEM
230	I-15	BACKWASH HOLDING BASINS
231	I-16	WASTE LIME SLUDGE PUMP STATION
232	I-17	HYPOCHLORITE STORAGE AND FEED FACILITY
233	I-18	MASTER PUMP STATION ANALYZERS
234	I-19	ENCLOSURE DETAILS
235	I-20	SITE SECURITY AND TELEMETRY MODIFICATIONS
236	I-21	ELECTRICAL MONITORING SYSTEM AND SCHEMATICS
237	I-22	INSTALLATION AND MISCELLANEOUS DETAILS SHEET 1
238	I-23	INSTALLATION AND MISCELLANEOUS DETAILS SHEET 2
239	I-24	INSTALLATION AND MISCELLANEOUS DETAILS SHEET 3
		ELECTRICAL
240	E-01	ELECTRICAL LEGEND AND SYMBOLS
241	E-02	ELECTRICAL NOTES
242	E-03	ELECTRICAL SITE PLAN EXISTING
243	E-04	ELECTRICAL SITE PLAN PROPOSED
244	E-05	EXISTING FACILITY SINGLE LINE DIAGRAM
245	E-06	PROPOSED FACILITY SINGLE LINE DIAGRAM SHEET 1 OF 2
246	E-07	PROPOSED FACILITY SINGLE LINE DIAGRAM SHEET 2 OF 2
247	E-08	EXISTING FILTER BUILDING FIRST FLOOR ELECTRICAL PLAN
248	E-09	EXISTING FILTER CONTROL ROOM ELECTRICAL PLAN
249	E-10	NEW ADMINISTRATION BUILDING FIRST FLOOR PLAN
250	E-11	NEW ADMINISTRATION BUILDING ELECTRICAL ROOM PLAN
251	E-12	NEW ADMINISTRATION BUILDING SECOND FLOOR PLAN
252	E-13	NEW ADMINISTRATION BUILDING ROOF POWER
253	E-14	NEW ADMINISTRATION BUILDING FIRST FLOOR LIGHTING
254	E-15	NEW ADMINISTRATION BUILDING SECOND FLOOR LIGHTING
255	E-16	NEW ADMINISTRATION BUILDING FIRST FLOOR FIRE ALARM PLAN
256	E-17	NEW ADMINISTRATION BUILDING SECOND FLOOR FIRE ALARM PLAN
257	E-18	NEW ADMINISTRATION BUILDING FIRE ALARM RISER AND CALCULATIONS
258	E-19	NEW ADMINISTRATION BUILDING FIRE ALARM NOTES AND LEGENDS
259	E-20	SECURITY ACCESS ELECTRICAL DETAILS SHEET 1
260	E-21	SECURITY ACCESS ELECTRICAL DETAILS SHEET 2
261	E-22	SECURITY ACCESS ELECTRICAL DETAILS SHEET 3
262	E-23	ELECTRICAL ROOM 1 DEMOLITION AND PROPOSED PLAN
263	E-24	ELECTRICAL ROOM 2 EQUIPMENT MODIFICATIONS
264	E-25	RAW WATER WELL NOS. 1 AND 2 POWER AND LIGHTING PLAN
265	E-26	AERATOR / LIME CONTACTOR ACCESS STAIRS POWER AND LIGHTING PLAN
266	E-27	LIME CONTACTOR POWER AND LIGHTING PLAN
267	E-28	LIME SLAKER AND SILO MODIFICATIONS POWER AND LIGHTING PLAN
268	E-29	MASTER PUMP STATION POWER AND LIGHTING PLAN
269	E-30	HIGH SERVICE PUMPS SECTION
270	E-31	BACKWASH AND TRANSFER PUMPS SECTION
271	E-32	INTERIM CHEMICAL STORAGE AND FEED SYSTEM POWER AND LIGHTING PLAN
272	E-33	CHEMICAL HANDLING FACILITY POWER AND LIGHTING PLAN
273	E-34	BACKWASH HOLDING BASINS POWER PLAN
274	E-35	WASTE LIME SLUDGE PUMP STATION POWER PLAN
275	E-36	SODIUM HYPOCHLORITE FACILITIES POWER AND LIGHTING
276	E-37	LIGHTNING PROTECTION SYSTEM
277	E-38	SITE LIGHTING PLAN
278	E-39	SITE SECURITY PLAN
279	E-40	SECURITY SCHEDULES
280	E-41	PANEL SCHEDULES ADMINISTRATION BUILDING
281	E-42	PANEL SCHEDULES PROCESS AREA SHEET 1
282	E-43	PANEL SCHEDULES PROCESS AREA SHEET 2
283	E-44	PANEL SCHEDULES PROCESS AREA SHEET 3
284	E-45	PANEL SCHEDULES PROCESS AREA SHEET 4
285	E-46	SCHEMATICS SHEET 1
286	E-47	SCHEMATICS SHEET 2
287	E-48	SCHEMATICS SHEET 3
288	E-49	ELECTRICAL CONTROL AND SIGNAL RISER DIAGRAMS 1
289	E-50	ELECTRICAL CONTROL AND SIGNAL RISER DIAGRAMS 2
290	E-51	ELECTRICAL CONTROL AND SIGNAL RISER DIAGRAMS 3
291	E-52	ELECTRICAL CONTROL AND SIGNAL RISER DIAGRAMS 4
292	E-53	ELECTRICAL CONTROL AND SIGNAL RISER DIAGRAMS 5
293	E-54	ELECTRICAL CONTROL AN SIGNAL RISER DIAGRAMS 6
294	E-55	ELECTRICAL CONTROL AN SIGNAL RISER DIAGRAMS 7
295	E-56	ELECTRICAL CONTROL AN SIGNAL RISER DIAGRAMS 8
296	E-57	DUCT BANK SECTIONS
297	E-58	DUCT BANK SCHEDULES
298	E-59	MANHOLES - E1 AND C1 CONDUIT RISERS
299	E-60	MANHOLES - E2 AND C2 CONDUIT RISERS
300	E-61	MANHOLES - E3 AND E4 CONDUIT RISERS
301	E-62	MANHOLES - C3 AND C4 CONDUIT RISERS
302	E-63	ELECTRICAL DETAILS SHEET 1
303	E-64	ELECTRICAL DETAILS SHEET 2
304	E-65	ELECTRICAL DETAILS SHEET 3
305	E-66	ELECTRICAL DETAILS SHEET 4
306	E-67	ELECTRICAL DETAILS SHEET 5
307	E-68	ELECTRICAL DETAILS SHEET 6
308	E-69	ELECTRICAL DETAILS SHEET 7
309	E-70	ELECTRICAL DETAILS SHEET 8
		HVAC
310	H-01	HVAC SYMBOLS, ABBREVIATIONS AND NOTES
311	H-02	NEW ADMINISTRATION BUILDING FIRST FLOOR - HVAC PLAN
312	H-03	NEW ADMINISTRATION BUILDING SECOND FLOOR - HVAC PLAN
313	H-04	NEW ADMINISTRATION BUILDING ROOF - HVACPLAN
314	H-05	CHEMICAL HANDLING FACILITY HVAC PLAN
315	H-06	HVAC SCHEDULES
316	H-07	HVAC DETAILS SHEET 1
317	H-08	HVAC DETAILS SHEET 2
		PLUMBING
318	P-01	PLUMBING SYMBOLS, ABBREVIATIONS, AND NOTES
319	P-02	NEW ADMINISTRATION BUILDING FIRST FLOOR SANITARY PLAN
320	P-03	NEW ADMINISTRATION BUILDING SECOND FLOOR SANITARY PLAN
321	P-04	NEW ADMINISTRATION BUILDING FIRST FLOOR POTABLE WATER PLAN
322	P-05	NEW ADMINISTRATION BUILDING SECOND FLOOR POTABLE WATER PLAN
323	P-06	NEW ADMINISTRATION BUILDING ROOF DRAINAGE PLAN
324	P-07	NEW ADMINISTRATION BUILDING SANITARY ISOMETRIC
325	P-08	NEW ADMINISTRATION BUILDING FIRST FLOOR POTABLE WATER ISOMETRIC
326	P-09	NEW ADMINISTRATION BUILDING SECOND FLOOR POTABLE WATER ISOMETRIC
327	P-10	PLUMBING DETAILS SHEET 1
328	P-11	LANDSCAPE ELEVATIONS - CODE MINIMUM
		LANDSCAPING
329	L-1	LANDSCAPE PLAN
330	L-2	LANDSCAPE NOTES
331	L-3	LANDSCAPE DETAILS
		IRRIGATION
332	IR-1	IRRIGATION PLAN
333	IR-2	IRRIGATION DETAILS
334	IR-3	IRRIGATION DETAILS & NOTES
335	IR-4	IRRIGATION NOTES

NO.	DATE	ISSUED FOR	BY
1	07/24/15	REQUEST FOR PROPOSAL	G.A.B.

DESIGNED G.A.B.
DRAWN H.F.M.
CHECKED J.N.M.
PROJ. ENGR. G.A.B.

GEORGE A. BROWN P.E.
No. 56076

HAZEN AND SAWYER
Environmental Engineers & Scientists
4000 Hollywood Boulevard, Suite 750N
Hollywood, Florida 33021
Certificate of Authorization Number: 2771

SCALE NTS

CLIENTS PROJECT: –
ENGINEERS PROJECT: 44238-004
CAD REFERENCE: 44238-004BP3-G03

NORTH MIAMI FLORIDA
CITY OF NORTH MIAMI
PUBLIC WORKS UTILITIES

WINSON WATER TREATMENT PLANT
RELIABILITY IMPROVEMENTS – VOLUME C: WTP REHAB
LIST OF DRAWINGS
SHEET 3

DATE: JULY 2015
SHEET: 3 OF 335
DRAWING: G-03

REQUEST FOR PROPOSAL

PLOT DATE: 7/29/2015 2:56 PM BY: TBOCAS
XREFs= ..\Tblock\44238-004-BP3-TB
File = H:\44238-004\Drawings\design build package\volume c - wtp rehab\Bid Package 3 - WTP Rehab\General\44238-004BP3-G03 Saved by tbocas Save date = 7/29/2015 2:31 PM

ROOM FINISH SCHEDULE

NO.	DESCRIPTION	FLOOR		BASE		WALL-NORTH		WALL-EAST		WALL-SOUTH		WALL-WEST		CEILING			REMARKS
		SUBSTRATE	FINISH	SUBSTRATE	FINISH	SUBSTRATE	FINISH	SUBSTRATE	FINISH	SUBSTRATE	FINISH	SUBSTRATE	FINISH	SUBSTRATE	FINISH	HEIGHT	
NEW ADMINSTRATION BUILDING – FIRST FLOOR – SEE DRAWING A-03																	
100	MEN	CONC	CT	GWB-MR/TB	CT	GWB-MR/TB	PT	GWB-MR/TB	PT/CT	GWB-MR/TB	PT/CT	GWB-MR/TB	PT/CT	ACT/GWB-MR	MFR/PT	10'-0"	NOTES 2,3
101	JAN	CONC	CT	GWB-MR/TB	CT	CMU	PT	CMU	PT/CT	GWB-MR/TB	PT/CT	GWB-MR	PT	ACT	MFR	10'-0"	NOTE 2
102	CORRIDOR	CONC	VCT	GWB	RUB	GWB	PT	GWB	PT	GWB	PT	GWB	PT	ACT	MFR	10'-0"	NOTE 1
103	WOMEN	CONC	CT	GWB-MR/TB	CT	GWB-MR/TB	PT/CT	GWB-MR/TB	PT/CT	GWB-MR/TB	PT/CT	GWB-MR/TB	PT/CT	ACT/GWB-MR	MFR/PT	10'-0"	NOTES 2,3
104	STAIR 1	CONC	RUB	CMU	RUB	CMU	PT	CMU	PT	CMU	PT	CMU	PT	EXP	--	27'-4"	NOTE 4
105	ELEV MACHINE	CONC	VCT	CMU	RUB	CMU	PT	CMU	PT	CMU	PT	CMU	PT	EXP	--	13'-4"	
106	LOBBY	CONC	VCT	GWB	RUB	GWB	PT	GWB	PT	GWB	PT	GWB	PT	ACT	MFR	10'-0"	
107	VESTIBULE	CONC	VCT	GWB	RUB	GWB	PT	GWB	PT	GWB	PT	GWB	PT	ACT	MFR	10'-0"	
108	EOC OFFICE	CONC	VCT	GWB	RUB	GWB	PT	GWB	PT	GWB	PT	GWB	PT	ACT	MFR	10'-0"	
109	CONF/EOC ROOM	CONC	VCT	GWB	RUB	GWB	PT	GWB	PT	GWB	PT	GWB	PT	ACT	MFR	10'-0"	
110	CLOSET	CONC	VCT	GWB	RUB	GWB	PT	GWB	PT	GWB	PT	GWB	PT	GWB	PT	VARIES	
111	STAIR 2	CONC	RUB	CMU	RUB	CMU	PT	CMU	PT	GWB/CMU	PT	CMU	PT	EXP	PT	27'-4"	NOTE 4
112	MECH/ELEC ROOM	CONC	SEALER	CMU	PT	CMU	PT	CMU	PT	CMU	PT	CMU	PT	EXP	--	12'-0"	
113	ELEV	CONC	--	CMU	--	CMU	--	CMU	--	CMU	--	CMU	--	EXP	--	27'-4"	
NEW ADMINSTRATION BUILDING – SECOND FLOOR – SEE DRAWING A-04																	
200	BREAK ROOM	CONC	VCT	GWB	RUB	GWB	PT	GWB	PT	GWB	PT	GWB	PT	ACT	MFR	10'-0"	
201	OFFICE	CONC	VCT	GWB	RUB	GWB	PT	GWB	PT	GWB	PT	GWB	PT	ACT	MFR	10'-0"	
202	CLOSET	CONC	VCT	GWB	RUB	GWB	PT	GWB	PT	GWB	PT	GWB	PT	ACT	MFR	10'-0"	
203	LAB	CONC	VCT	GWB	RUB	GWB	PT	GWB	PT	GWB	PT	GWB	PT	ACT	MFR	10'-0"	
204	CORRIDOR	CONC	VCT	GWB	RUB	GWB	PT	GWB	PT	GWB	PT	GWB	PT	ACT	MFR	10'-0"	
205	WOMEN	CONC	CT	GWB	CT	GWB/TB	PT/CT	GWB/TB	PT/CT	GWB	PT	GWB/TB	PT/CT	ACT	MFR	10'-0"	NOTES 2 & 3
206	MEN	CONC	CT	GWB	CT	GWB	PT	GWB/TB	PT/CT	GWB/TB	PT/CT	GWB/TB	PT/CT	ACT	MFR	10'-0"	NOTES 2 & 3
207	CLOSET	CONC	VCT	GWB	RUB	CMU	PT	GWB	PT	GWB	PT	GWB	PT	ACT	MFR	10'-0"	
208	OFFICE	CONC	VCT	GWB	RUB	GWB	PT	GWB	PT	GWB	PT	GWB	PT	ACT	MFR	10'-0"	NOTE 1
209	OFFICE	CONC	VCT	GWB	RUB	GWB	PT	GWB	PT	GWB	PT	GWB	PT	ACT	MFR	10'-0"	NOTE 1
210	CONTROL ROOM	CONC	VCT	GWB	RUB	GWB	PT	GWB	PT	GWB	PT	GWB	PT	ACT	MFR	10'-0"	

FINISH LEGEND

ACT	ACOUSTICAL CEILING TILE	GWB-MR	GYPSUM WALLBOARD-MOISTURE RESISTANT
CMU	CONCRETE MASONRY UNIT	MFR	MANUFACTURER'S SPECIFIED FINISH
CONC	CONCRETE	PT	PAINT
CT	CERAMIC TILE	RUB	RUBBER
EXP	EXPOSED STRUCTURE	TB	TILE BACKER BOARD
GWB	GYPSUM WALLBOARD	VCT	VINYL COMPOSITION TILE

ROOM FINISH SCHEDULE NOTES

1. PAINTED GWB CEILING AT 10'-0" IN ALCOVE. WALLS & FLOORING SHALL EXTEND INTO CLOSET.
2. CERAMIC TILE FULL HT AT SHOWER, AND AS SHOWN ON DWG A-13. PROVIDE TILE BACKER BOARD BEHIND CT. PAINT WALL ABOVE CERAMIC TILE.
3. GWB-MR CEILING @ 8'-0" AT SHOWER.
4. FLOOR, LANDING, TREADS AND RISERS TO BE COVERED WITH RUBBER RESILIENT FLOORING. PAINT OTHER EXPOSED CONCRETE AND STEEL.

DOOR SCHEDULE

NO.	FRAME		DOOR					DETAILS			GLAZING	LOUVER	FIRE LABEL	FINISH	HDWR NO	THRSHLD	WIND PRESSURE		REMARKS
	TYPE	MATL	TYPE	MATL	WIDTH	HEIGHT	THICKNESS	HEAD	JAMB	SILL							NEG.	POS.	
NEW ADMINSTRATION BUILDING – FIRST FLOOR – SEE DRAWING A-03																			
100	F-1	HM	A	WD	3'-0"	7'-10"	1 3/4"	4/A-22	4/A-22	4/A-22	--	--	--	MFR	5	MARBLE	--	--	NOTE 2
101	F-1	HM	A	WD	3'-0"	7'-10"	1 3/4"	4/A-22	4/A-22	4/A-22	--	--	--	MFR	7	MARBLE	--	--	NOTE 2
102	F-1	HM	C	HM	3'-0"	7'-10"	1 3/4"	1/A-22	1/A-22	1/A-22	IG	--	--	PT	1	AL	68 PSF	63 PSF	
102A	F-2	HM	A	HM	2'-6"	2'-6"	1 3/4"	1/A-22	1/A-22	1/A-22	--	--	--	PT	7	--	72 PSF	66 PSF	NOTE 1
103	F-1	HM	A	WD	3'-0"	7'-10"	1 3/4"	4/A-22	4/A-22	4/A-22	--	--	--	MFR	5	MARBLE	--	--	NOTE 2
104	F-1	HM	B	HM	3'-0"	7'-10"	1 3/4"	1/A-22	1/A-22	1/A-22	FG	--	45 MIN	PT	1	AL	68 PSF	63 PSF	
104A	F-1	HM	B	WD	3'-0"	7'-10"	1 3/4"	3/A-22	3/A-22	3/A-22	FG	--	45 MIN	MFR	9	--	--	--	NOTE 2
105	F-1	HM	A	WD	3'-6"	7'-10"	1 3/4"	1/A-22	1/A-22	1/A-22	--	--	45 MIN	MFR	7	REDUCER	--	--	NOTE 2
107	F-1	AL	D	AL	(2) 2'-10"	7'-10"	1 3/4"	1/A-22	1/A-22	1/A-22	IG	--	--	MFR	2	AL	66 PSF	60 PSF	
107A	SF-1	AL	D	AL	(2) 3'-0"	7'-10"	1 3/4"	5/A-22	5/A-22	5/A-22	TG	--	--	MFR	10	--	--	--	
108	SF-2	AL	C	WD	3'-0"	7'-10"	1 3/4"	5/A-22	5/A-22	5/A-22	TG	--	--	MFR	6	--	--	--	NOTE 2
108A	MFR	HM	F	WD	(2) 3'-0"	7'-10"	1 3/4"	6/A-22	6/A-22	6/A-22	--	--	--	MFR	11	--	--	--	NOTES 2, 3
109	F-1	HM	B	WD	3'-0"	7'-10"	1 3/4"	4/A-22	4/A-22	4/A-22	TG	--	--	MFR	1	--	--	--	NOTE 2
109A	F-1	HM	B	WD	3'-0"	7'-10"	1 3/4"	4/A-22	4/A-22	4/A-22	TG	--	--	MFR	1	--	--	--	NOTE 2
110	MFR	HM	F	WD	(2) 4'-0"	7'-10"	1 3/4"	6/A-22	6/A-22	6/A-22	--	--	--	MFR	11	--	--	--	NOTE 2
111	F-1	HM	B	WD	3'-0"	7'-10"	1 3/4"	4/A-22	4/A-22	4/A-22	TG	--	45 MIN	MFR	9	--	--	--	NOTE 2
112	F-1	HM	A	HM	3'-0"	7'-10"	1 3/4"	1/A-22	1/A-22	1/A-22	--	--	90 MIN	PT	1	AL	68 PSF	63 PSF	
112A	F-1	HM	A	HM	(2) 2'-10"	9'-2"	1 3/4"	2/A-22	2/A-22	2/A-22	--	--	90 MIN	PT	2	AL	65 PSF	59 PSF	

DOOR SCHEDULE

NO.	FRAME		DOOR					DETAILS			GLAZING	LOUVER	FIRE LABEL	FINISH	HDWR NO	THRSHLD	WIND PRESSURE		REMARKS
	TYPE	MATL	TYPE	MATL	WIDTH	HEIGHT	THICKNESS	HEAD	JAMB	SILL							NEG.	POS.	
NEW ADMINSTRATION BUILDING – SECOND FLOOR – SEE DRAWING A-04																			
104B	F-1	HM	B	WD	3'-0"	7'-10"	1 3/4"	3/A-22	3/A-22	3/A-22	FG	--	45 MIN	MFR	9	--	--	--	NOTE 2
111A	F-1	HM	C	HM	3'-0"	7'-10"	1 3/4"	1/A-22	1/A-22	1/A-22	IG	--	--	PT	3	AL	68 PSF	63 PSF	NOTE 2
200	F-1	HM	C	WD	3'-0"	7'-10"	1 3/4"	4/A-22	4/A-22	4/A-22	TG	--	--	MFR	5	--	--	--	NOTE 2
201	F-1	HM	B	WD	3'-0"	7'-10"	1 3/4"	4/A-22	4/A-22	4/A-22	TG	--	--	MFR	6	--	--	--	NOTE 2
202	F-1	HM	A	WD	3'-0"	7'-10"	1 3/4"	4/A-22	4/A-22	4/A-22	--	--	--	MFR	5	--	--	--	NOTE 2
203	F-3	HM	D	WD	3'-0"	7'-10"	1 3/4"	4/A-22	4/A-22	4/A-22	TG	--	--	MFR	5	--	--	--	DOOR WITH SIDELIGHT, NOTE 2
204	F-1	HM	C	HM	3'-0"	7'-10"	1 3/4"	1/A-22	1/A-22	1/A-22	IC	--	--	PT	1	AL	68 PSF	63 PSF	
205	F-1	HM	A	WD	3'-0"	7'-10"	1 3/4"	4/A-22	4/A-22	4/A-22	--	--	--	MFR	8	MARBLE	--	--	NOTE 2
206	F-1	HM	A	WD	3'-0"	7'-10"	1 3/4"	4/A-22	4/A-22	4/A-22	--	--	--	MFR	8	MARBLE	--	--	NOTE 2
207	F-1	HM	A	WD	3'-0"	7'-10"	1 3/4"	4/A-22	4/A-22	4/A-22	--	--	--	MFR	7	--	--	--	NOTE 2
208	F-1	HM	B	WD	3'-0"	7'-10"	1 3/4"	4/A-22	4/A-22	4/A-22	TG	--	--	MFR	6	--	--	--	NOTE 2
208A	MFR	HM	F	WD	(2) 3'-0"	7'-10"	1 3/4"	6/A-22	6/A-22	6/A-22	--	--	--	MFR	11	--	--	--	BI-FOLD DOORS, NOTE 2
209	F-1	HM	B	WD	3'-0"	7'-10"	1 3/4"	4/A-22	4/A-22	4/A-22	TG	--	--	MFR	6	--	--	--	NOTE 2
209A	MFR	HM	F	WD	3'-8"	7'-10"	1 3/4"	6/A-22	6/A-22	6/A-22	--	--	--	MFR	11	--	--	--	BI-FOLD DOOR, NOTE 2
210	F-1	HM	C	HM	3'-0"	7'-10"	1 3/4"	1/A-22	1/A-22	1/A-22	IG	--	--	PT	3	AL	68 PSF	63 PSF	
210A	F-1	HM	A	WD	3'-0"	7'-10"	1 3/4"	4/A-22	4/A-22	4/A-22	--	--	--	MFR	5	--	--	--	NOTE 2

DOOR LEGEND

AL	ALUMINUM	PT	PAINT
FG	FIRE RATED GLASS	STL	STEEL
HM	HOLLOW METAL	TG	TEMPERED GLASS
IG	INSULATING GLASS	WD	WOOD
MFR	MANUFACTURER'S STANDARD		

DOOR SCHEDULE NOTES

1. FIRE ACCESS DOOR W/ SIGN "NO STORAGE".
2. PAINT HM FRAME IN FIELD, STAIN WD DOORS IN FACTORY.
3. CENTER DOOR IN CLOSET WALL.

WINDOW SCHEDULE

TYPE	FRAME MATERIAL	WIDTH	HEIGHT	DETAILS			GLAZING	WINDOW TREATMENT	WIND PRESSURE		REMARKS
				HEAD	JAMB	SILL			NEG.	POS.	
NEW ADMINSTRATION BUILDING – SEE DRAWINGS A-08 & A-09											
W-1	MFR	3'-4"	5'-4"	7/A-22	7/A-22	7/A-22	IG	--	69 PSF	64 PSF	
W-2	MFR	4'-0"	5'-4"	7/A-22	7/A-22	7/A-22	IG	--	69 PSF	63 PSF	
W-3	MFR	2'-0"	5'-4"	7/A-22	7/A-22	7/A-22	IG	--	71 PSF	66 PSF	
W-4	MFR	5'-4"	4'-4"	7/A-22	7/A-22	7/A-22	IG	--	68 PSF	63 PSF	
W-5	MFR	4'-4"	5'-4"	7/A-22	7/A-22	7/A-22	IG	--	63 PSF	63 PSF	
W-6	MFR	4'-0"	6'-0"	7/A-22	7/A-22	7/A-22	IG	--	68 PSF	63 PSF	
W-7	MFR	4'-8"	5'-4"	7/A-22	7/A-22	7/A-22	IG	--	68 PSF	62 PSF	
W-8	MFR	5'-4"	4'-8"	7/A-22	7/A-22	7/A-22	IG	--	68 PSF	62 PSF	

WINDOW LEGEND

AL	ALUMINUM
IG	INSULATED GLASS
MFR	MANUFACTURER

WINDOW NOTES

WINDOW TYPES 1/4" = 1'-0"

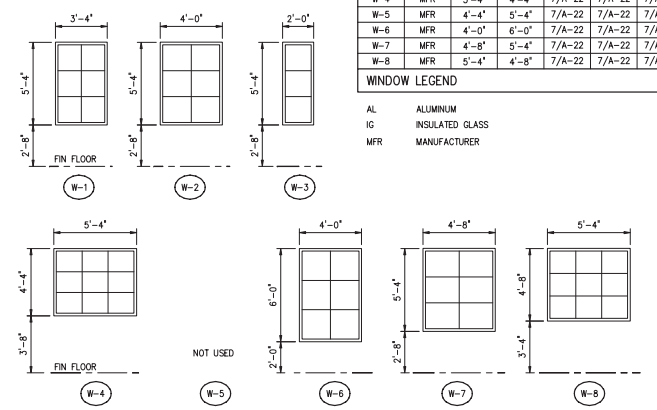

STOREFRONT FRAME TYPES 1/4" = 1'-0"

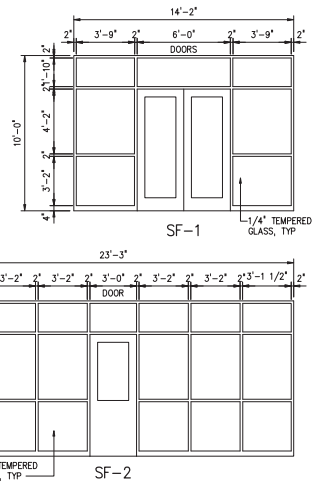

FRAME TYPES 1/4" = 1'-0"

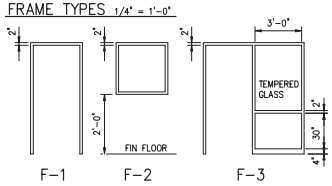

DOOR TYPES 1/4" = 1'-0"

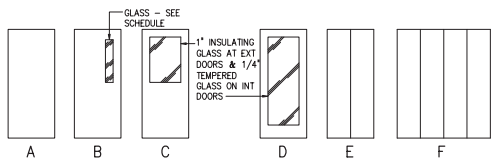

FRAME PROFILES 3" = 1'-0"

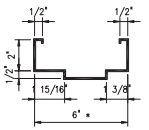

FP-1 * COORDINATE W/ WALL THICKNESS

THRESHOLD TYPES 3" = 1'-0"

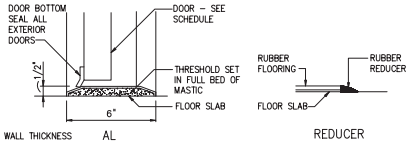

AL REDUCER

NO.	DATE	ISSUED FOR	BY
1	07/24/15	REQUEST FOR PROPOSAL	G.A.B.

DESIGNED W.H.R.
DRAWN A.L.B.
CHECKED W.H.R.
PROJ. ENGR. G.A.B.

DEAN AVERY WALDROP R.A.
No. 93380

HAZEN AND SAWYER
Environmental Engineers & Scientists
4000 Hollywood Boulevard, Suite 750N
Hollywood, Florida 33021
Certificate of Authorization Number: 2771

SCALE –

CLIENTS PROJECT: –
ENGINEERS PROJECT: 44238-004
CAD REFERENCE: 44238-004BP3-A01

CITY OF NORTH MIAMI
PUBLIC WORKS UTILITIES

WINSON WATER TREATMENT PLANT
RELIABILITY IMPROVEMENTS – VOLUME C: WTP REHAB

NEW ADMINISTRATION BUILDING SCHEDULES

DATE: JULY 2015
SHEET: 190 OF 335
DRAWING: A-01

REQUEST FOR PROPOSAL

PLOT DATE: 7/24/2015 4:31 PM BY: TBOCAS

XREFs= ..\Tblock\44238-004-BP3-TB,..\Base-BP3\A-BP3-Admin-Elev,..\Arch Details\Storefront Glazing

File = H:\44238-004\Drawings\design build package\volume c - wtp rehab\Bid Package 3 - WTP Rehab\Arch\44238-004BP3-A01 Saved by tbocas Save date = 5/18/2015 11:08 AM

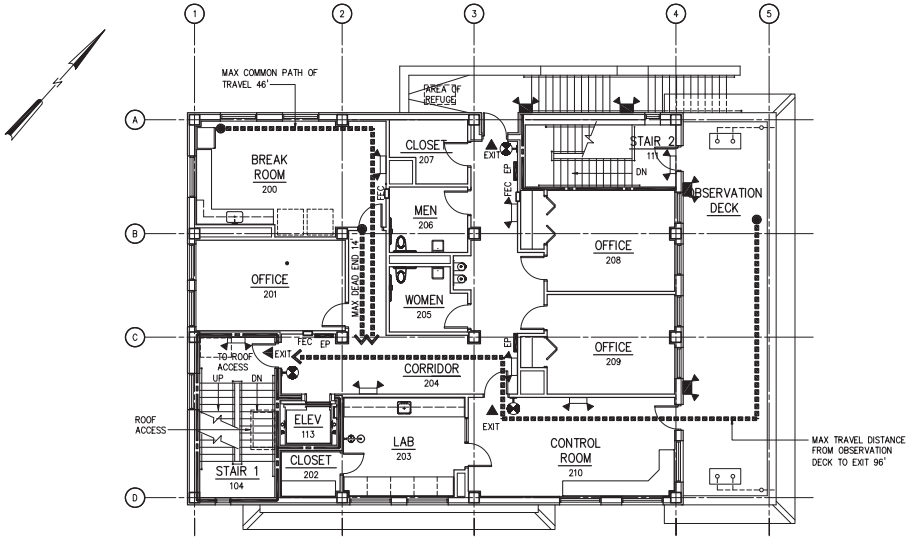

SECOND FLOOR LIFE SAFETY PLAN
1/8" = 1'-0"

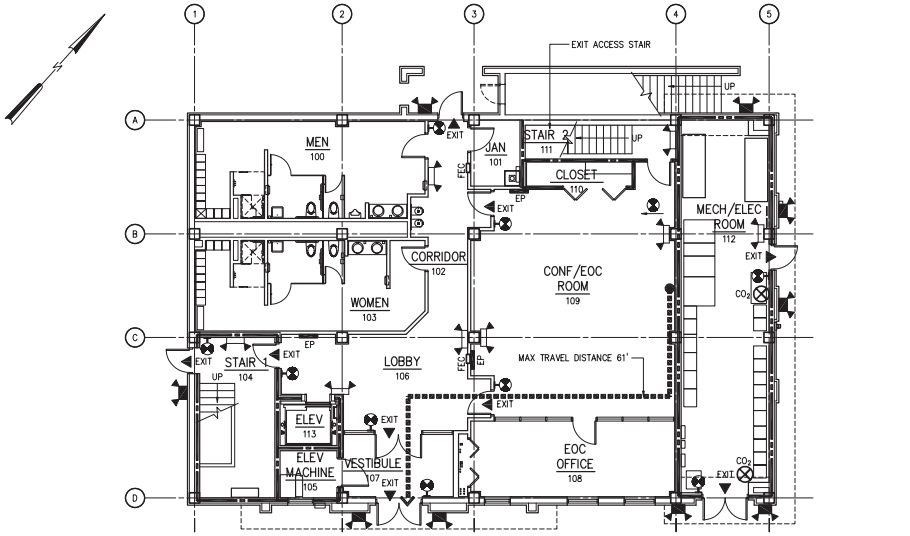

FIRST FLOOR LIFE SAFETY PLAN
1/8" = 1'-0"

LIFE SAFETY ANALYSIS

APPLICABLE CODES:

2010 FLORIDA BUILDING CODE: FUEL GAS (FIRST PRINTING)
2010 FLORIDA BUILDING CODE: MECHANICAL (FIRST PRINTING)
2010 FLORIDA BUILDING CODE: TEST PROTOCOLS (FIRST PRINTING)
2010 FLORIDA BUILDING CODE: ENERGY CONSERVATION (FIRST PRINTING)
2010 FLORIDA BUILDING CODE: ACCESSIBILITY (FIRST PRINTING)
2010 FLORIDA BUILDING CODE: BUILDING (FIRST PRINTING)
2010 FLORIDA BUILDING CODE: EXISTING BUILDING (FIRST PRINTING)
2010 FLORIDA BUILDING CODE: PLUMBING (FIRST PRINTING)
NFPA 101: 2009 EDITION
NATIONAL ELECTRIC CODE, 2008 EDITION

OCCUPANCY CLASSIFICATION:

GROUP B, BUSINESS

CONSTRUCTION TYPE:

TYPE II-B
UNPROTECTED (UNSPRINKLERED) (PER FBC 602.2)
MAXIMUM NUMBER OF STORIES = 3 (PER FBC TABLE 503)
ACTUAL NUMBER OF STORIES = 2
MAXIMUM AREA (PER FLOOR) = 23,000 SF (PER FBC TABLE 503)
ACTUAL AREA = 1ST FLOOR 3830 SF < 23,000 SF
ACTUAL AREA = 2ND FLOOR 3830 SF < 23,000 SF
MAXIMUM BUILDING HEIGHT =55' (PER FBC TABLE 503)
ACTUAL BUILDING HEIGHT = 31'< 55'

OCCUPANT LOAD:

TOTAL OCCUPANT LOAD = 83 FIRST FLOOR
= 69 SECOND FLOOR
FIRST FLOOR CONFERENCE – 780/15 = 52
FIRST FLOOR BUSINESS – 3050/100 = 31
SECOND FLOOR BUSINESS – 3165/100 = 32
SECOND FLOOR OBSERVATION DECK – 600/15 = 40

EGRESS CAPACITY:

EGRESS CAPACITY EXCEEDS OCCUPANT LOAD.

0.2 INCHES PER OCCUPANT (FBC TABLE 1005.1) AT DOORS

0.3 INCHES PER OCCUPANT (FBC TABLE 1005.1) AT STAIRS

MINIMUM CORRIDOR WIDTH = 44 INCHES (FBC 1016.2)

MINIMUM STAIR WIDTH = 44 INCHES (FBC 1009.1)

MINIMUM CLEAR OPENING OF EXIT DOORS = 32 INCHES (FBC 1008.1.1)

1.) STAIRWAYS
69 OCCUPANTS x 0.3 = 20.7" < 44"

2.) OTHER COMPONENTS
BUILDING – 84 OCCUPANTS x 0.2 = 16.8" < 36"

EGRESS NOTE:

EGRESS FROM THE SECOND FLOOR BY STAIR 1 AND EXTERIOR STAIR. STAIR 2 IS CONVENIENCE STAIR TO PROVIDE ACCESS TO OBSERVATION DECK.

EXIT ACCESS TRAVEL DISTANCE:

BUSINESS GROUP "B" WITHOUT SPRINKLER SYSTEM
MAXIMUM TRAVEL DISTANCE TO EXIT = 200 FT. (PER FBC TABLE 1016.1)

EXIT ACCESS COMMON PATH OF TRAVEL:

BUSINESS GROUP "B" WITHOUT SPRINKLER SYSTEM
COMMON PATH OF TRAVEL = 75 FT. (PER FBC 1014.3)

EXIT ACCESS DEAD END CORRIDORS:

BUSINESS GROUP "B" WITHOUT SPRINKLER SYSTEM
20' MAXIMUM LENGTH (FBC 1018.4)

OBSERVATION DECK – OUTSIDE AREA (1004.8)

AREA – 600 SQUARE FEET
MAXIMUM OCCUPANT LOAD – 84
EXIT THROUGH INTERVENING SPACES (1014.2)
MAXIMUM TRAVEL DISTANCE – 96 FT

FIRE PROTECTION REQUIREMENTS:

(PER FBC, 2010, TABLE 601)	
STRUCTURAL FRAME	"0 HRS"
BEARING WALLS (INT)	"0 HRS"
(EXT)	"0 HRS"
EXTERIOR WALLS > 10 FEET	
NON-BEARING WALLS (INT)	"0 HR"
FLOOR CONSTRUCTION	"0 HR"
ROOF CONSTRUCTION	"0 HR"

ORDINARY HAZARD FIRE EXTINGUISHER REQUIREMENTS:

GROUP "B" BLDG. (BUSINESS) (CLASS A) PER FPC SECTION 3.3.102.3)
FLORIDA FIRE PROTECTION CODE (BASED ON NFPA 1, FIRE CODE, 2009 EDITION AND NFPA 101, LIFE SAFETY CODE, 2009 EDITION)

FIRE EXTINGUISHER: 40A:60BC – DRY CHEMICAL DESIGN CRITERIA: FLOOR AREA = 1500 – TRAVEL DISTANCE = 75 FT.

TACTILE EXIT SIGNS SHALL BE PROVIDED AT EACH EXIT DOOR.

LIFE SAFETY LEGEND

▲	ENTRANCE/EXIT		1-HOUR FIRE RATED CMU WALL
	DIRECTION OF TRAVEL		2-HOUR FIRE RATED CMU WALL
●	MOST REMOTE POINT		EXIT SIGN
FEC	FIRE EXTINGUISHER CABINET		EXIT SIGN WALLMOUNT
	EMERGENCY LIGHT FIXTURE	EP	EVACUATION PLAN SIGN
	DECORATIVE EMERGENCY LIGHT FIXTURE		
FE	FIRE EXTINGUISHER – DRY CHEMICAL		
CO_2	FIRE EXTINGUISHER – CARBON DIOXIDE		

NO.	DATE	ISSUED FOR	BY
1	03/24/15	REVISED FOR PROPOSAL	G.A.B.

DESIGNED W.H.R.
DRAWN A.L.B.
CHECKED W.H.R.
PROJ. ENGR. G.A.B.

DEAN AVERY WALDROP R.A.
No. 93380

HAZEN AND SAWYER
Environmental Engineers & Scientists
4000 Hollywood Boulevard, Suite 750N
Hollywood, Florida 33021
Certificate of Authorization Number: 2771

SCALE –

CLIENTS PROJECT: –
ENGINEERS PROJECT: 44238-004
CAD REFERENCE: 44238-004BP3-A02

CITY OF NORTH MIAMI
PUBLIC WORKS UTILITIES

WINSON WATER TREATMENT PLANT
RELIABILITY IMPROVEMENTS – VOLUME C: WTP REHAB

NEW ADMINISTRATION BUILDING
LIFE SAFETY PLANS

DATE: JULY 2015
SHEET: 191 OF 335
DRAWING: A-02

REQUEST FOR PROPOSAL

PLOT DATE: 7/24/2015 4:31 PM BY: TBLOCK

XREFs= ..\Tblock\44238-004-BP3-TB,..\Base-BP3\A-BP3-Admin-Plan-Bottom,..\Base-BP3\A-BP3-Admin-Plan-Top,..\Base-BP3\A-BP3-Admin-Plan-Col-Grid,..\Base-BP3\E-BP3-Admin-Plan-Bottom

File = H:\44238-004\Drawings\design build package\volume c - wtp rehab\Bid Package 3 - WTP Rehab\Arch\44238-004BP3-A02 Saved by ablaha Save date = 5/27/2015 6:16 PM

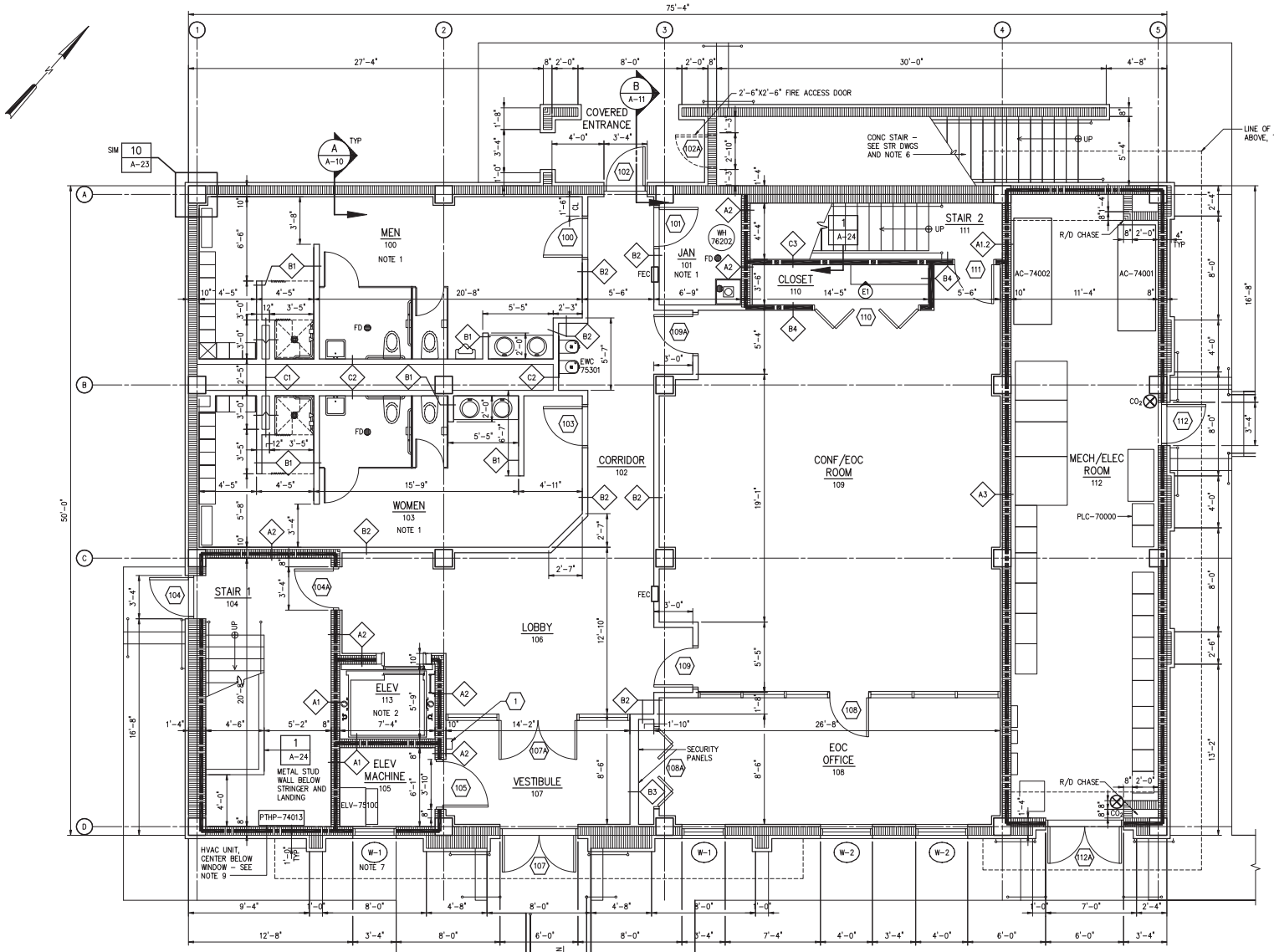

FIRST FLOOR PLAN
1/4" = 1'-0"

NOTES:

1. SEE DRAWING A-13 FOR ENLARGED TOILET PLAN.
2. SEE DRAWING A-24 FOR ENLARGED ELEVATOR PLAN
3. SEE DRAWING A-15 FOR FURNITURE PLAN.
4. DIMENSIONS ARE TO FACE OF STUD OR NOMINAL FACE OF MASONRY.
5. CLEAR (CL) DIMENSIONS ARE MINIMUM DIMENSION FROM FACE OF FINISH TO FACE OF FINISH.
6. SURFACE OF CONCRETE STAIR (TREAD, RISER AND LANDING) SHALL RECEIVE SLIP RESISTANT COATING.
7. SEE DETAIL 7/A-22 (SIM).
8. ALL WALLS OF LOBBY, CORRIDOR AND VESTIBULE SHALL BE FULL HEIGHT, WITH 5/8" GYP BD TO UNDERSIDE OF FLOOR SLAB ABOVE.
9. COORDINATE MASONRY OPENING WITH HVAC UNIT. PROVIDE MASONRY LINTEL WITH (2) #5 BARS, EXTEND 8" BEYOND OPENING EA SIDE.

KEYED NOTES:

1. WALL MOUNTED SECURE KEY BOX TO HOLD KEY FOR ELEVATOR MACHINE ROOM . KEY BOX SHALL BE SUPRA MAX BY UNITED TECHNOLOGIES CORPORATION, OR EQUAL.

LEGEND:

- 1-HR FIRE RATED PARTITION – SEE DRAWING NO. A-24
- 2-HR FIRE RATED PARTITION – SEE DRAWING NO. A-24
- CONCRETE MASONRY
- 100 DOOR NUMBER – SEE DRAWING NO. A-01
- FE FIRE EXTINGUISHER – DRY CHEMICAL
- FEC FIRE EXTINGUISHER CABINET – DRY CHEMICAL
- CO_2 FIRE EXTINGUISHER – CARBON DIOXIDE
- W-1 WINDOW NUMBER – SEE DRAWING NO. A-01
- P1 PARTITION TYPE – SEE DRAWING NO. A-24
- D1 CASEWORK ELEVATION – SEE DRAWING NO. A-12
- R/D ROOF DRAIN

NO.	DATE	ISSUED FOR	BY
1	07/24/15	REQUEST FOR PROPOSAL	G.A.B.

DESIGNED W.H.R.
DRAWN A.L.B.
CHECKED W.H.R.
PROJ. ENGR. G.A.B.

DEAN AVERY WALDROP R.A. No. 93380

HAZEN AND SAWYER
Environmental Engineers & Scientists
4000 Hollywood Boulevard, Suite 750N
Hollywood, Florida 33021
Certificate of Authorization Number: 2771

SCALE –

CLIENTS PROJECT: –
ENGINEERS PROJECT: 44238-004
CAD REFERENCE: 44238-004BP3-A03

CITY OF NORTH MIAMI
PUBLIC WORKS UTILITIES

WINSON WATER TREATMENT PLANT
RELIABILITY IMPROVEMENTS – VOLUME C: WTP REHAB

NEW ADMINISTRATION BUILDING
FIRST FLOOR PLAN

DATE: JULY 2015
SHEET: 192 OF 335
DRAWING: A-03

REQUEST FOR PROPOSAL

PLOT DATE: 7/24/2015 4:31 PM BY: TBOCAS

XREFs= ..\Tblock\44238-004-BP3-TB,..\Base-BP3\A-BP3-Admin-Plan-Bottom,..\Base-BP3\A-BP3-Admin-Plan-Col-Grid,..\Base-BP3\P-BP3-Admin-Plan-Bottom,..\Base-BP3\E-BP3-Admin-Plan-Bottom,..\Base-BP3\S-BP3-Admin-Plan-Bottom

File = H:\44238-004\Drawings\design build package\volume c - wtp rehab\Bid Package 3 - WTP Rehab\Arch\44238-004BP3-A03 Saved by tbocas Save date = 5/18/2015 11:08 AM

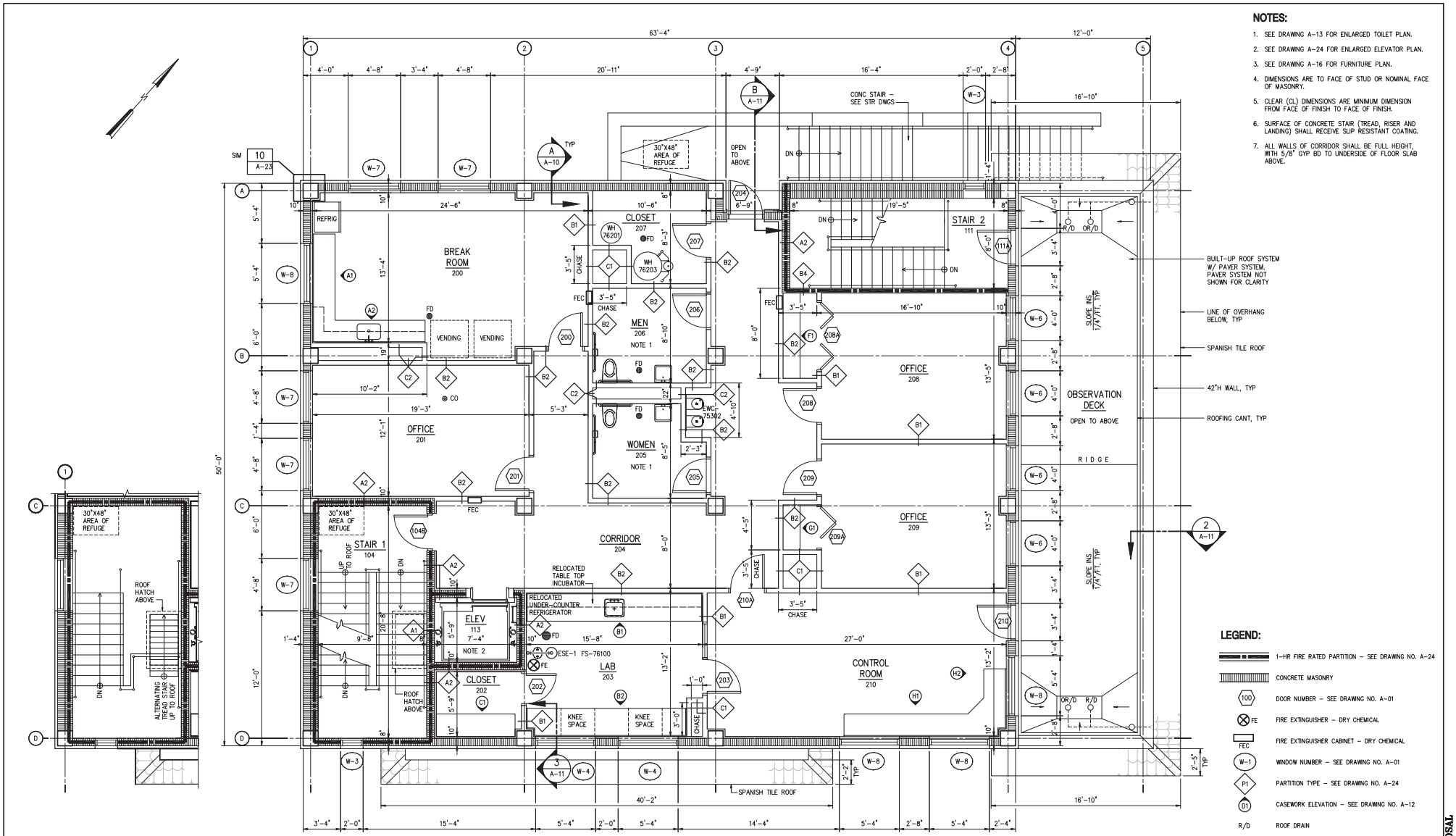

STAIR TO ROOF
1/4" = 1'-0"

SECOND FLOOR PLAN
1/4" = 1'-0"

NOTES:

1. SEE DRAWING A-13 FOR ENLARGED TOILET PLAN.
2. SEE DRAWING A-24 FOR ENLARGED ELEVATOR PLAN.
3. SEE DRAWING A-16 FOR FURNITURE PLAN.
4. DIMENSIONS ARE TO FACE OF STUD OR NOMINAL FACE OF MASONRY.
5. CLEAR (CL) DIMENSIONS ARE MINIMUM DIMENSION FROM FACE OF FINISH TO FACE OF FINISH.
6. SURFACE OF CONCRETE STAIR (TREAD, RISER AND LANDING) SHALL RECEIVE SLIP RESISTANT COATING.
7. ALL WALLS OF CORRIDOR SHALL BE FULL HEIGHT, WITH 5/8" GYP BD TO UNDERSIDE OF FLOOR SLAB ABOVE.

LEGEND:

- 1-HR FIRE RATED PARTITION – SEE DRAWING NO. A-24
- CONCRETE MASONRY
- 100 DOOR NUMBER – SEE DRAWING NO. A-01
- FE FIRE EXTINGUISHER – DRY CHEMICAL
- FEC FIRE EXTINGUISHER CABINET – DRY CHEMICAL
- W-1 WINDOW NUMBER – SEE DRAWING NO. A-01
- P1 PARTITION TYPE – SEE DRAWING NO. A-24
- D1 CASEWORK ELEVATION – SEE DRAWING NO. A-12
- R/D ROOF DRAIN
- OR/D OVERFLOW ROOF DRAIN

NO.	DATE	ISSUED FOR	BY
1	07/24/15	REQUEST FOR PROPOSAL	G.A.B.

DESIGNED W.H.R.
DRAWN A.L.B.
CHECKED W.H.R.
PROJ. ENGR. G.A.B.

DEAN AVERY WALDROP R.A.
No. 93380

HAZEN AND SAWYER
Environmental Engineers & Scientists
4000 Hollywood Boulevard, Suite 750N
Hollywood, Florida 33021
Certificate of Authorization Number: 2771

SCALE –

CLIENTS PROJECT: –
ENGINEERS PROJECT: 44238-004
CAD REFERENCE: 44238-004BP3-A04

CITY OF NORTH MIAMI
PUBLIC WORKS UTILITIES

WINSON WATER TREATMENT PLANT
RELIABILITY IMPROVEMENTS – VOLUME C: WTP REHAB

NEW ADMINISTRATION BUILDING
SECOND FLOOR PLAN

DATE: JULY 2015
SHEET: 193 OF 335
DRAWING: A-04

REQUEST FOR PROPOSAL

PLOT DATE: 7/24/2015 4:31 PM BY: TBOCAS

XREFs= ..\Tblock\44238-004-BP3-TB,..\Base-BP3\A-BP3-Admin-Plan-Top,..\Base-BP3\A-BP3-Admin-Plan-Col-Grid,..\Base-BP3\P-BP3-Admin-Plan-Top,..\Base-BP3\A-BP3-Admin-Plan-Stair-to-Roof

File = H:\44238-004\Drawings\design build package\volume c - wtp rehab\Bid Package 3 - WTP Rehab\Arch\44238-004BP3-A04 Saved by tbocas Save date = 5/18/2015 11:08 AM

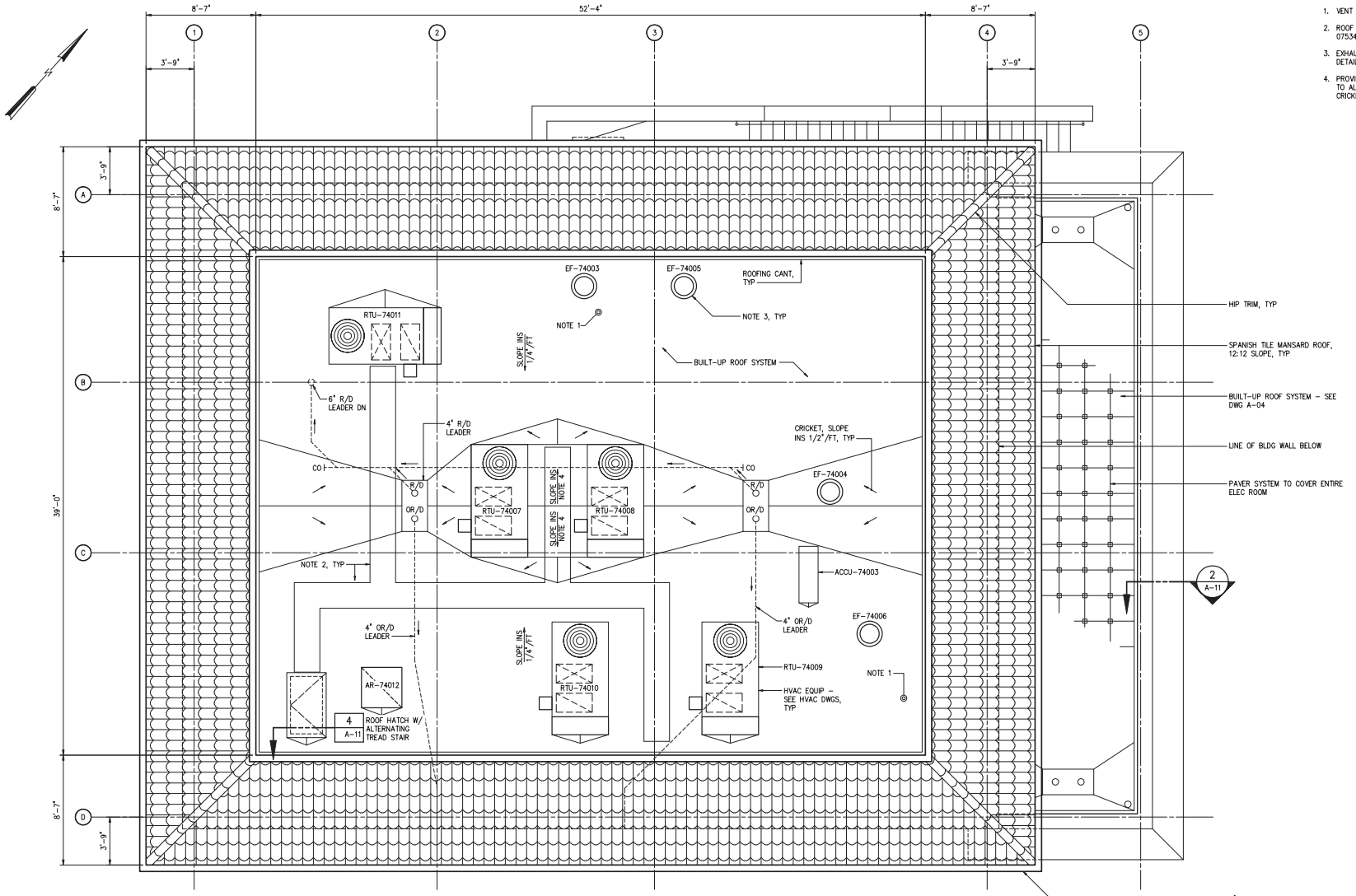

ROOF PLAN
1/4" = 1'-0"

NOTES:

1. VENT PIPE - SEE DETAIL 4/A-23.
2. ROOF WALKWAY PADS - SEE DETAIL 0753411.
3. EXHAUST FAN - SEE HVAC DRAWINGS AND DETAIL 5/A-23.
4. PROVIDE ADDITIONAL INSULATION THICKNESS TO ALL CENTER AREA TO DRAIN OVER CRICKETS.

NO.	DATE	ISSUED FOR	BY
1	07/24/15	REQUEST FOR PROPOSAL	G.A.B.

DESIGNED W.H.R.
DRAWN A.L.B.
CHECKED W.H.R.
PROJ. ENGR. G.A.B.

DEAN AVERY WALDROP R.A.
No. 93380

HAZEN AND SAWYER
Environmental Engineers & Scientists
4000 Hollywood Boulevard, Suite 750N
Hollywood, Florida 33021
Certificate of Authorization Number: 2771

SCALE -

CLIENTS PROJECT: -
ENGINEERS PROJECT: 44238-004
CAD REFERENCE: 44238-004BP3-A05

NORTH MIAMI FLORIDA
CITY OF NORTH MIAMI
PUBLIC WORKS UTILITIES

WINSON WATER TREATMENT PLANT
RELIABILITY IMPROVEMENTS - VOLUME C: WTP REHAB

NEW ADMINISTRATION BUILDING
ROOF PLAN

DATE: JULY 2015
SHEET: 194 OF 335
DRAWING: A-05

REQUEST FOR PROPOSAL

PLOT DATE: 7/24/2015 4:31 PM BY: TBOCAS

XREFs= ..\Tblock\44238-004-BP3-TB,..\Base-BP3\A-BP3-Admin-Plan-Col-Grid,..\Base-BP3\A-BP3-Admin-Plan-Top,..\Base-BP3\H-BP3-Admin-Plan-Roof

File = H:\44238-004\Drawings\design build package\volume c - wtp rehab\Bid Package 3 - WTP Rehab\Arch\44238-004BP3-A05 Saved by tbocas Save date = 5/18/2015 11:08 AM

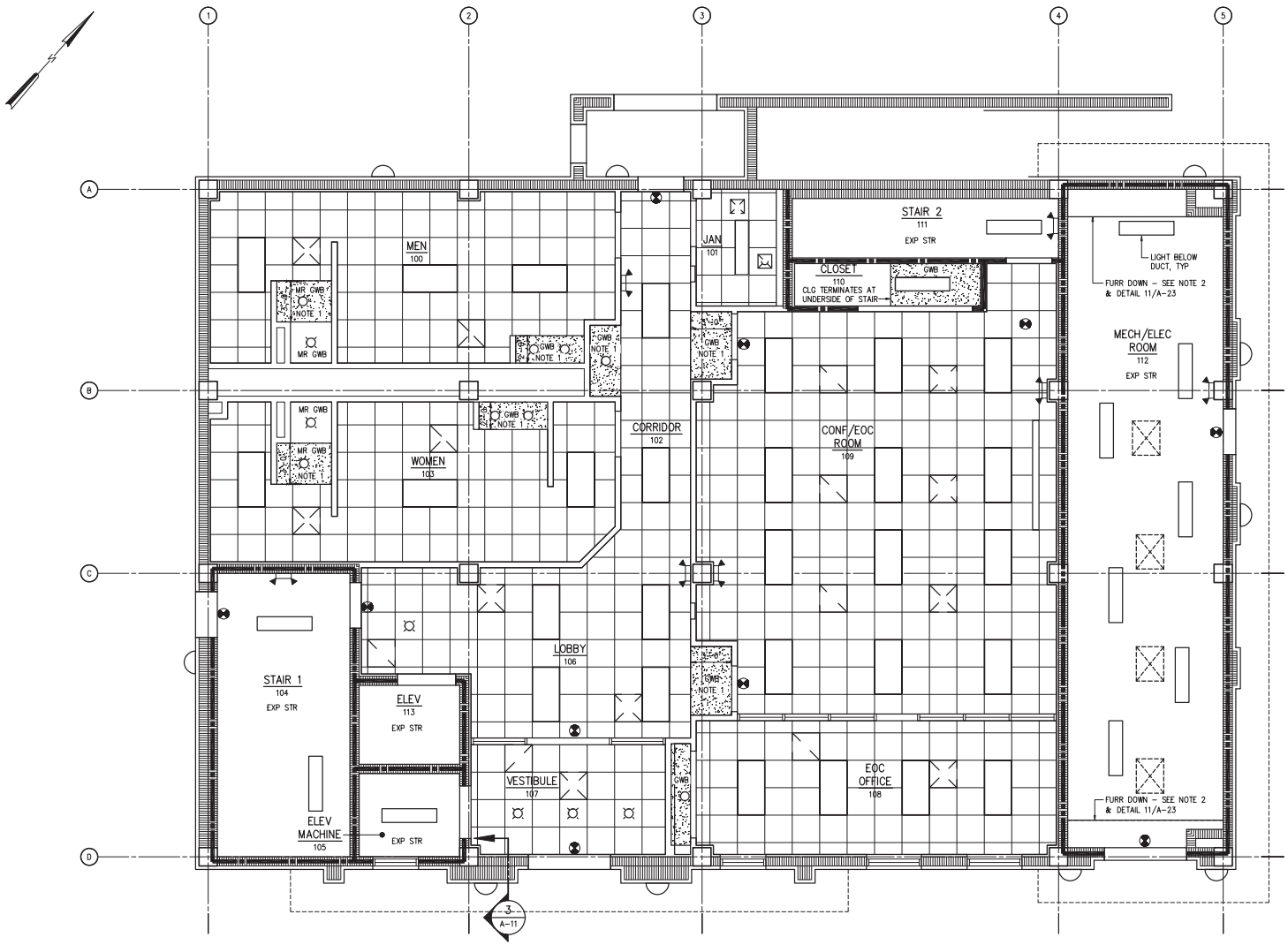

BOTTOM REFLECTED CEILING PLAN
1/4" = 1'-0"

NOTES:

1. GWB SOFFIT – SEE DETAIL 7/A-23.
2. SIZE OF FURR DOWN SHALL BE COORDINATED WITH ROOF DRAIN PIPING. FURR DOWN SHALL COMPLETELY ENCASE ROOF DRAIN PIPING.

LEGEND:

	DENOTES 2' X 2' LAY-IN ACOUSTICAL CEILING
GWB	DENOTES 1/2" GYPSUM WALLBOARD CEILING
EXP STR	DENOTES EXPOSED STRUCTURE ABOVE
	DENOTES DIFFUSER – SEE HVAC DWGS
	DENOTES FLOURESCENT LIGHT FIXTURE – SEE ELEC DWGS
	DENOTES INCANDESCENT LIGHT FIXTURE – SEE ELEC DWGS

NO.	DATE	ISSUED FOR	BY
1	07/24/15	REQUEST FOR PROPOSAL	G.A.B.

DESIGNED W.H.R.
DRAWN A.L.B.
CHECKED W.H.R.
PROJ. ENGR. G.A.B.

DEAN AVERY WALDROP R.A.
No. 93380

HAZEN AND SAWYER
Environmental Engineers & Scientists
4000 Hollywood Boulevard, Suite 750N
Hollywood, Florida 33021
Certificate of Authorization Number: 2771

SCALE –

CLIENTS PROJECT: –
ENGINEERS PROJECT: 44238-004
CAD REFERENCE: 44238-004BP3-A06

NORTH MIAMI FLORIDA
CITY OF NORTH MIAMI
PUBLIC WORKS UTILITIES

WINSON WATER TREATMENT PLANT
RELIABILITY IMPROVEMENTS – VOLUME C: WTP REHAB
NEW ADMINISTRATION BUILDING
FIRST FLOOR REFLECTED
CEILING PLAN

DATE: JULY 2015
SHEET: 195 OF 335
DRAWING: A-06

REQUEST FOR PROPOSAL

PLOT DATE: 7/24/2015 4:31 PM BY: TBOCAS

XREFs= ..\Tblock\44238-004-BP3-TB,..\Base-BP3\A-BP3-Admin-Plan-Bottom-Reflected-Ceiling,..\Base-BP3\A-BP3-Admin-Plan-Bottom,..\Base-BP3\A-BP3-Admin-Plan-Col-Grid,..\Base-BP3\H-BP3-Admin-Plan-Bottom

File = H:\44238-004\Drawings\design build package\volume c - wtp rehab\Bid Package 3 - WTP Rehab\Arch\44238-004BP3-A06 Saved by ablaha Save date = 6/6/2014 5:23 PM

NOTES:

1. GWB BULKHEAD – SEE DETAIL 6/A-23.
2. GWB SOFFIT – SEE DETAIL 7/A-23.

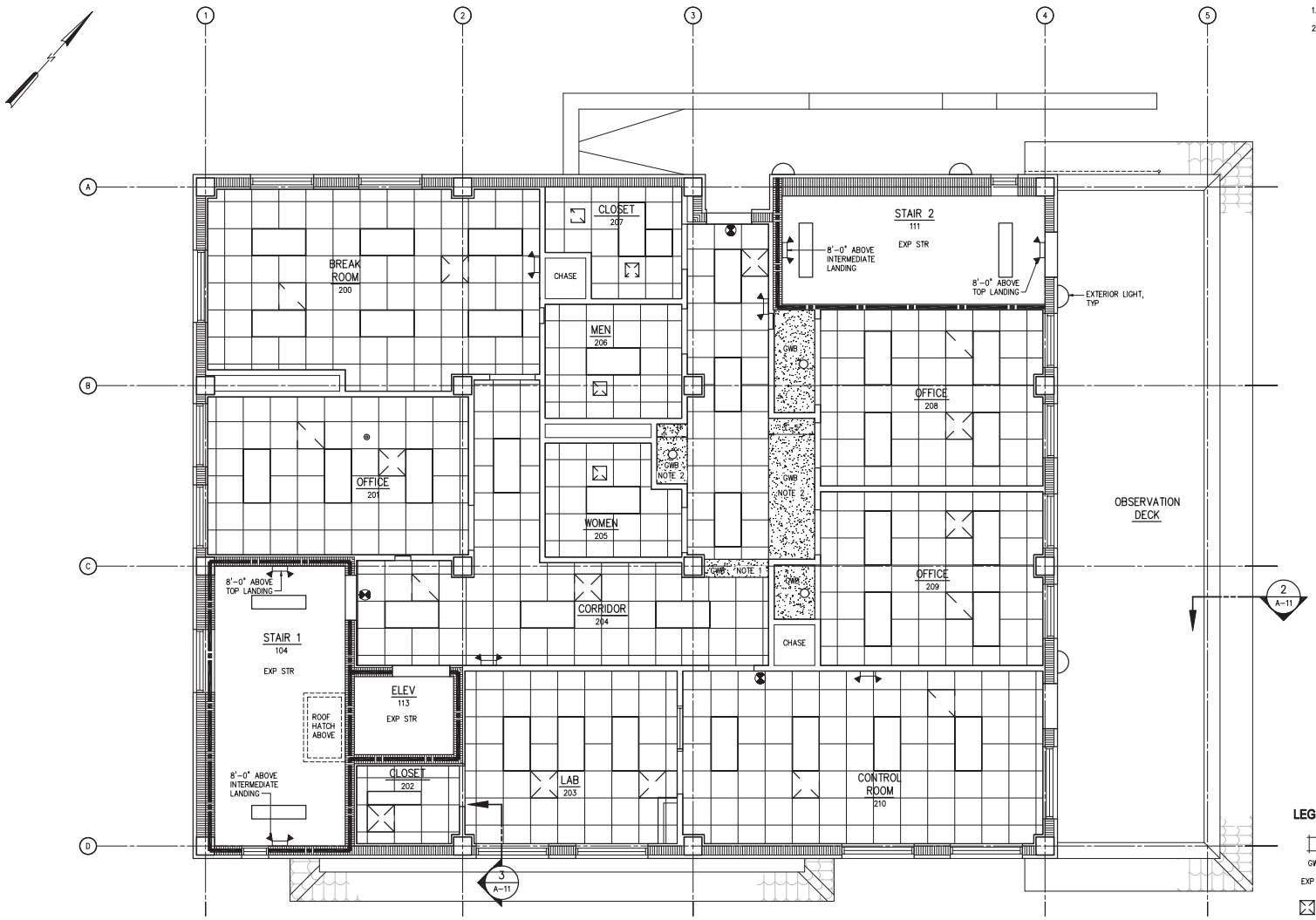

TOP REFLECTED CEILING PLAN
1/4" = 1'-0"

LEGEND:

- DENOTES 2' X 2' LAY-IN ACOUSTICAL CEILING
- GWB — DENOTES 1/2" GYPSUM WALLBOARD CEILING
- EXP STR — DENOTES EXPOSED STRUCTURE ABOVE
- DENOTES DIFFUSER – SEE HVAC DWGS
- DENOTES FLOURESCENT LIGHT FIXTURE – SEE ELEC DWGS
- DENOTES INCANDESCENT LIGHT FIXTURE – SEE ELEC DWGS

NO.	DATE	ISSUED FOR	BY
1	07/24/15	REQUEST FOR PROPOSAL	G.A.B.

DESIGNED W.H.R.
DRAWN A.L.B.
CHECKED W.H.R.
PROJ. ENGR. G.A.B.

DEAN AVERY WALDROP R.A.
No. 93380

HAZEN AND SAWYER
Environmental Engineers & Scientists
4000 Hollywood Boulevard, Suite 750N
Hollywood, Florida 33021
Certificate of Authorization Number: 2771

SCALE –

CLIENTS PROJECT: –
ENGINEERS PROJECT: 44238-004
CAD REFERENCE: 44238-004BP3-A07

NORTH MIAMI FLORIDA
CITY OF NORTH MIAMI
PUBLIC WORKS UTILITIES

WINSON WATER TREATMENT PLANT
RELIABILITY IMPROVEMENTS – VOLUME C: WTP REHAB
NEW ADMINISTRATION BUILDING
SECOND FLOOR REFLECTED
CEILING PLAN

DATE: JULY 2015
SHEET: 196 OF 335
DRAWING: A-07

REQUEST FOR PROPOSAL

PLOT DATE: 7/24/2015 4:31 PM BY: TBOCAS

XREFs= ..\Tblock\44238-004-BP3-TB,..\Base-BP3\A-BP3-Admin-Plan-Top-Reflected-Ceiling,..\Base-BP3\A-BP3-Admin-Plan-Top,..\Base-BP3\A-BP3-Admin-Plan-Col-Grid,..\Base-BP3\H-BP3-Admin-Plan-Top

File = H:\44238-004\Drawings\design build package\volume c - wtp rehab\Bid Package 3 - WTP Rehab\Arch\44238-004BP3-A07 Saved by ablaha Save date = 6/6/2014 5:23 PM

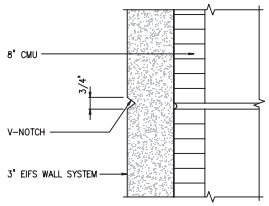

EIFS REVEAL JOINT

DETAIL 1 / A-08
3" = 1'-0"

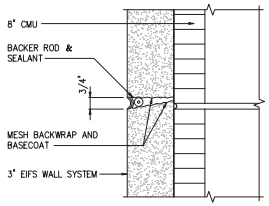

EIFS HORIZONTAL CONTROL JOINT

DETAIL 2 / A-08
3" = 1'-0"

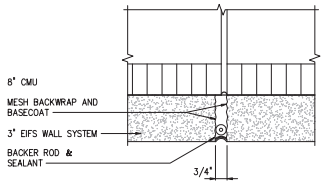

EIFS VERTICAL CONTROL JOINT

DETAIL 3 / A-08
3" = 1'-0"

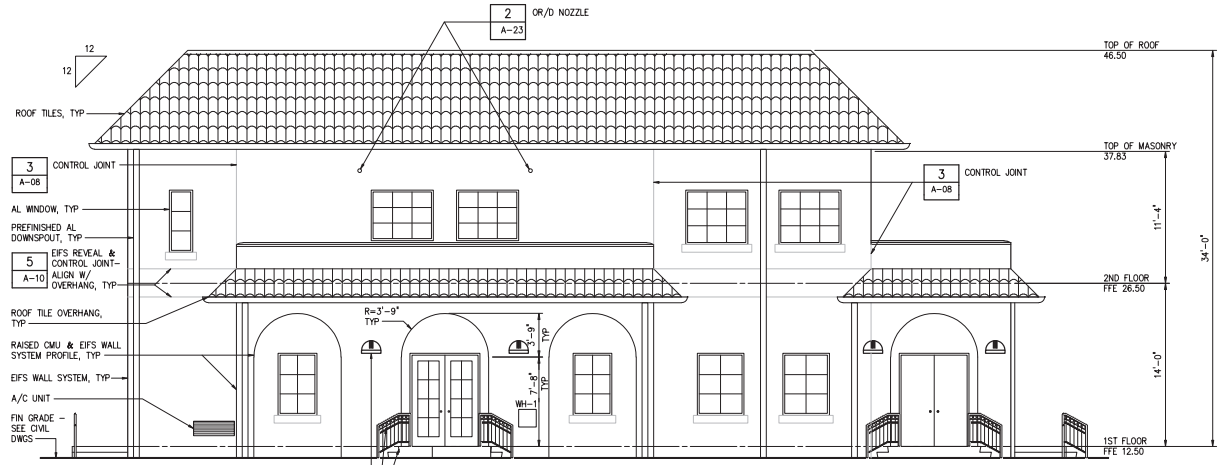

SOUTH ELEVATION
3/16" = 1'-0"

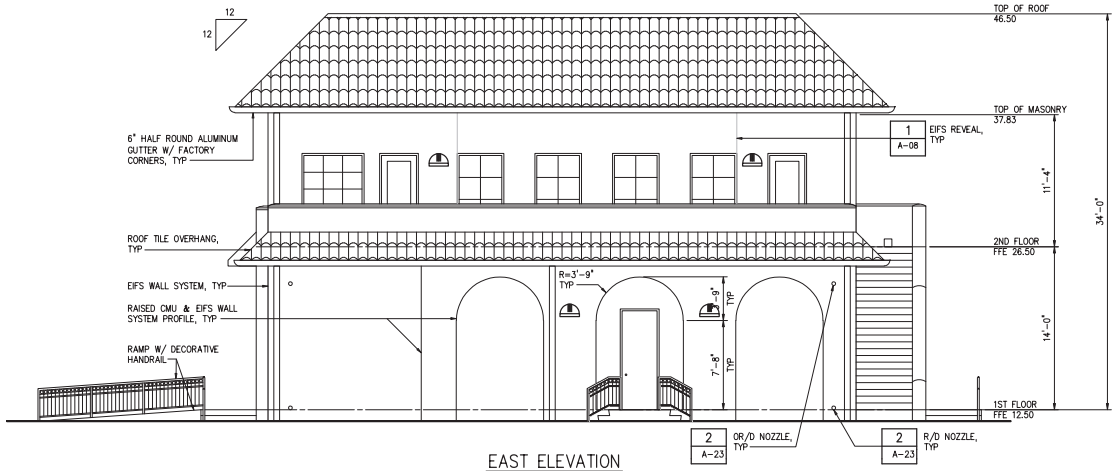

EAST ELEVATION
3/16" = 1'-0"

NO.	DATE	ISSUED FOR	BY
1	07/24/15	REQUEST FOR PROPOSAL	G.A.B.

DESIGNED W.H.R.
DRAWN A.L.B.
CHECKED W.H.R.
PROJ. ENGR. G.A.B.

DEAN AVERY WALDROP R.A.
No. 93380

HAZEN AND SAWYER
Environmental Engineers & Scientists
4000 Hollywood Boulevard, Suite 750N
Hollywood, Florida 33021
Certificate of Authorization Number: 2771

SCALE –

CLIENTS PROJECT: –
ENGINEERS PROJECT: 44238-004
CAD REFERENCE: 44238-004BP3-A08

NORTH MIAMI FLORIDA
CITY OF NORTH MIAMI
PUBLIC WORKS UTILITIES

WINSON WATER TREATMENT PLANT
RELIABILITY IMPROVEMENTS – VOLUME C: WTP REHAB

NEW ADMINISTRATION BUILDING
SOUTH AND EAST ELEVATIONS

DATE: JULY 2015
SHEET: 197 OF 335
DRAWING: A-08

REQUEST FOR PROPOSAL

PLOT DATE: 7/24/2015 4:31 PM BY: TBOCAS

XREFs= ..\Tblock\44238-004-BP3-TB,..\Base-BP3\A-BP3-Admin-Elev,..\Arch Details\A-SD-07 Stucco Reveal

File = H:\44238-004\Drawings\design build package\volume c - wtp rehab\Bid Package 3 - WTP Rehab\Arch\44238-004BP3-A08 Saved by tbocas Save date = 5/18/2015 11:08 AM

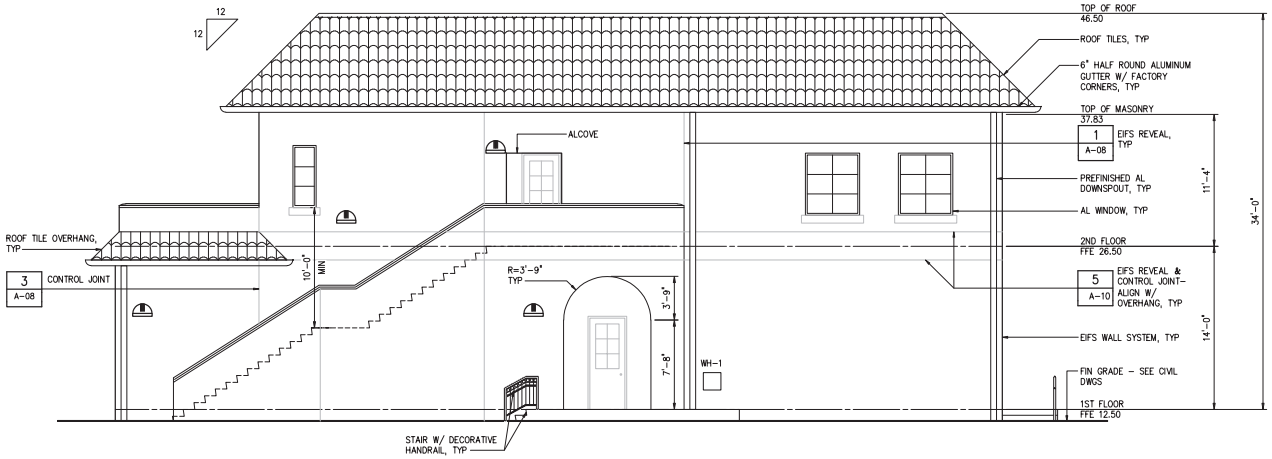

NORTH ELEVATION
3/16" = 1'-0"

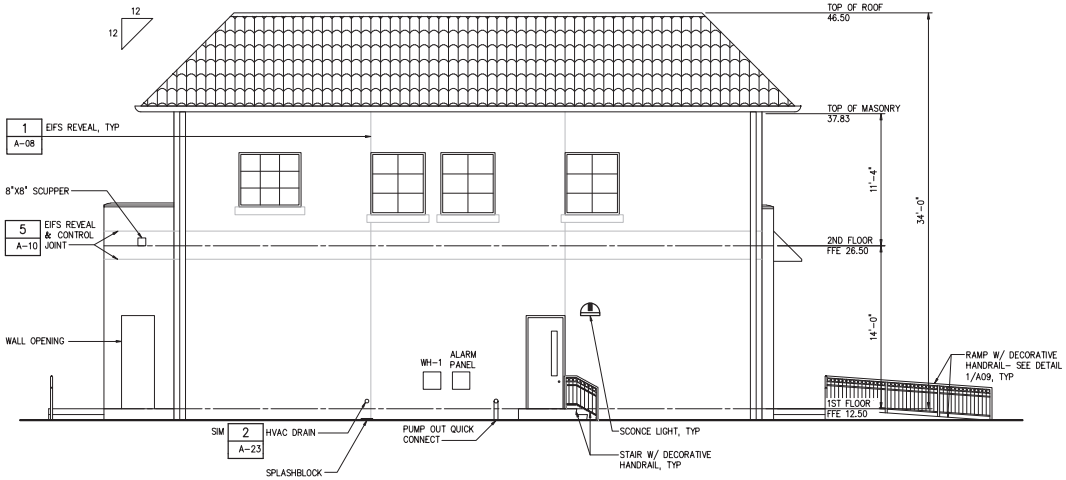

WEST ELEVATION
3/16" = 1'-0"

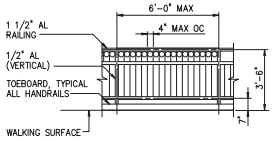

ELEVATION

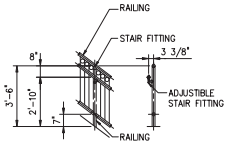

SECTION

DECORATIVE HANDRAIL
DETAIL 1 / A09
NTS

NO.	DATE	ISSUED FOR	BY
2	4/1/14	100% QA COMMENTS	H.J.V.
1	08/12/2013	REQUEST FOR PROPOSAL	G.A.B.

DESIGNED W.H.R.
DRAWN A.L.B.
CHECKED W.H.R.
PROJ. ENGR. G.A.B.

DEAN AVERY WALDROP R.A.
No. 93380

HAZEN AND SAWYER
Environmental Engineers & Scientists
4000 Hollywood Boulevard, Suite 750N
Hollywood, Florida 33021
Certificate of Authorization Number: 2771

SCALE –

CLIENTS PROJECT: –
ENGINEERS PROJECT: 44238-004
CAD REFERENCE: 44238-004BP3-A09

NORTH MIAMI FLORIDA
CITY OF NORTH MIAMI
PUBLIC WORKS UTILITIES

WINSON WATER TREATMENT PLANT
RELIABILITY IMPROVEMENTS – VOLUME C: WTP REHAB
NEW ADMINISTRATION BUILDING
NORTH AND WEST ELEVATIONS

DATE: JULY 2015
SHEET: 198 OF 335
DRAWING: A-09

REQUEST FOR PROPOSAL

PLOT DATE: 7/24/2015 4:31 PM BY: TBOCAS
XREFs= ..\Tblock\44238-004-BP3-TB,..\Base-BP3\A-BP3-Admin-Elev
File = H:\44238-004\Drawings\design build package\volume c - wtp rehab\Bid Package 3 - WTP Rehab\Arch\44238-004BP3-A09 Saved by abldha Save date = 5/27/2015 6:16 PM

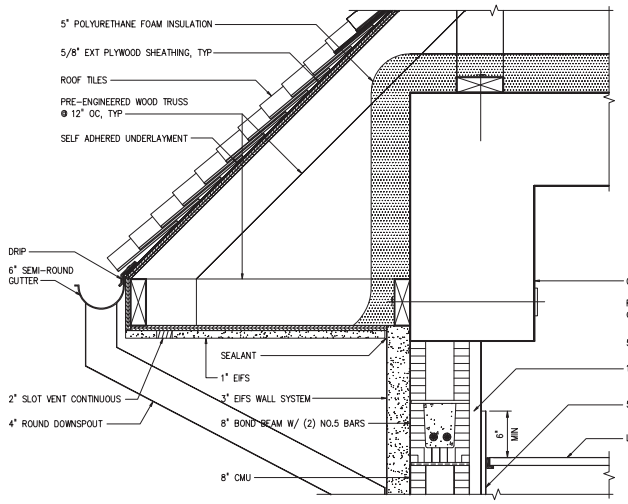

EAVE

DETAIL 1 (A-10) — 1 1/2" = 1'-0"

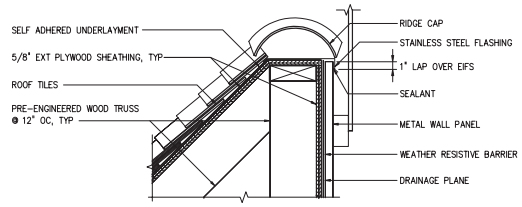

MANSARD TOP

DETAIL 3 (A-10) — 1 1/2" = 1'-0"

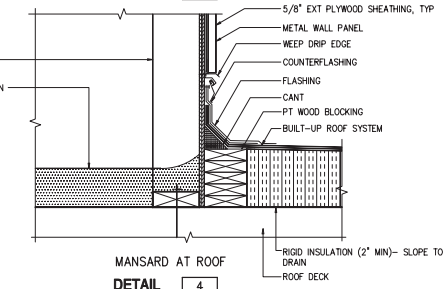

MANSARD AT ROOF

DETAIL 4 (A-10) — 1 1/2" = 1'-0"

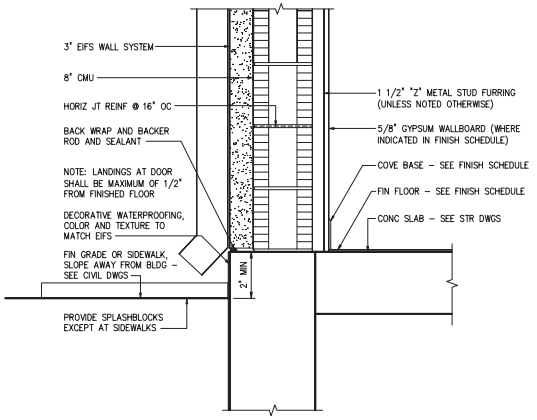

EXTERIOR WALL BOTTOM

DETAIL 2 (A-10) — 1 1/2" = 1'-0"

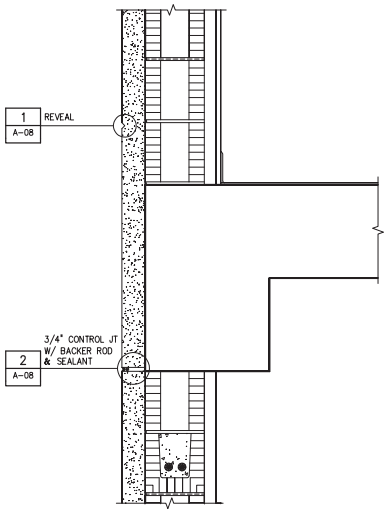

INTERMEDIATE LEVEL

DETAIL 5 (A-10) — 1 1/2" = 1'-0"

NOTES:

1. SEE STRU DWGS FOR REINFORCEMENT, TYP.

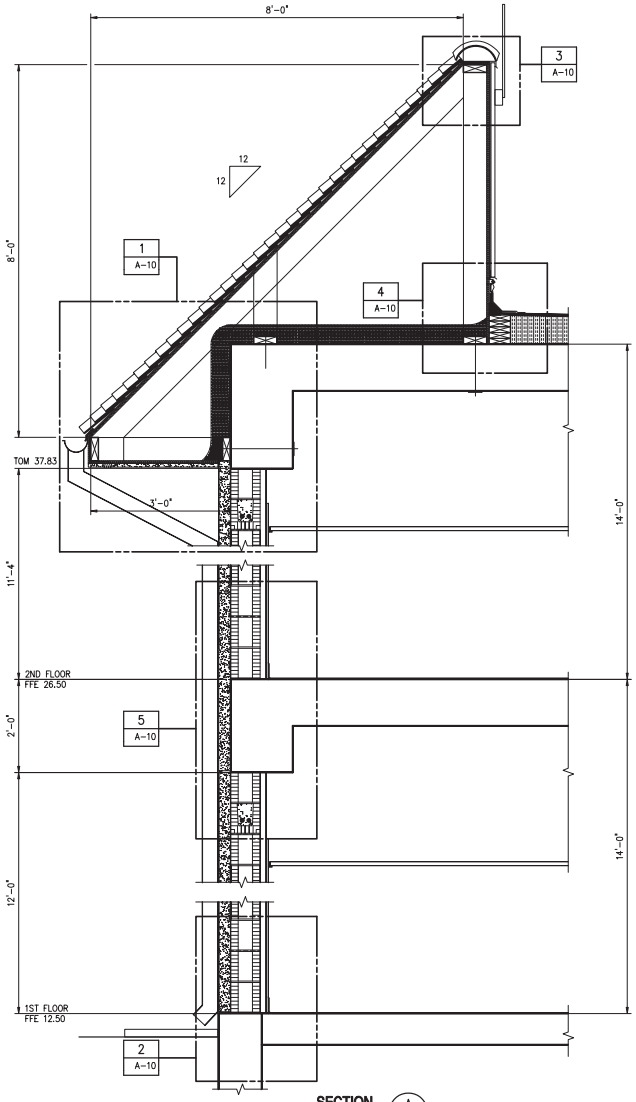

SECTION A (A-03) — 3/4" = 1'-0"

NO.	DATE	ISSUED FOR	BY
1	07/24/15	REQUEST FOR PROPOSAL	G.A.B.

DESIGNED W.H.R.
DRAWN A.L.B.
CHECKED W.H.R.
PROJ. ENGR. G.A.B.

DEAN AVERY WALDROP R.A.
No. 93380

HAZEN AND SAWYER
Environmental Engineers & Scientists
4000 Hollywood Boulevard, Suite 750N
Hollywood, Florida 33021
Certificate of Authorization Number: 2771

SCALE –

CLIENTS PROJECT: –
ENGINEERS PROJECT: 44238-004
CAD REFERENCE: 44238-004BP3-A10

NORTH MIAMI FLORIDA
CITY OF NORTH MIAMI
PUBLIC WORKS UTILITIES

WINSON WATER TREATMENT PLANT
RELIABILITY IMPROVEMENTS – VOLUME C: WTP REHAB

NEW ADMINISTRATION BUILDING
WALL SECTIONS – SHEET 1

DATE: JULY 2015
SHEET: 199 OF 335
DRAWING: A-10

REQUEST FOR PROPOSAL

PLOT DATE: 7/24/2015 4:32 PM BY: TBOCAS

XREFs= ..\Tblock\44238-004-BP3-TB,..\Base-BP3\A-BP3-Admin-Section-A

File = H:\44238-004\Drawings\design build package\volume c - wtp rehab\Bid Package 3 - WTP Rehab\Arch\44238-004BP3-A10 Saved by tbocas Save date = 5/18/2015 11:08 AM

NOTES:

1. SEE STRU DWGS FOR REINFORCEMENT, TYP.

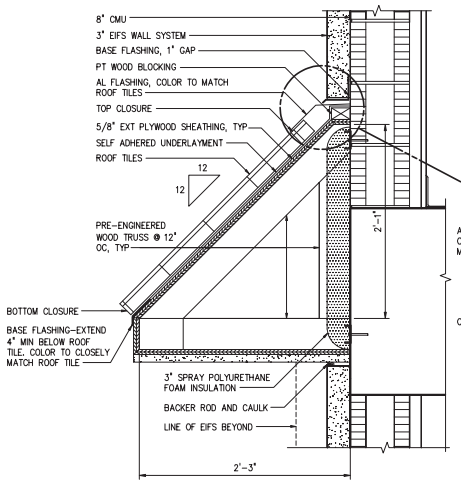

TYPICAL OVERHANG

DETAIL 1 / A-11
1 1/2" = 1'-0"

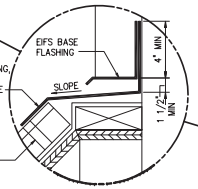

FLASHING

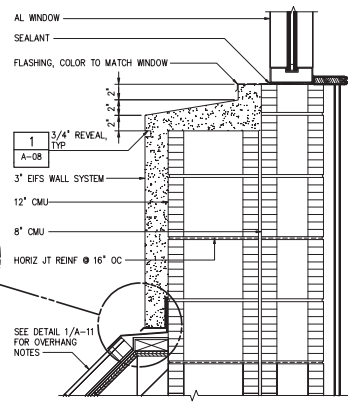

WINDOW SILL AT FACADE

DETAIL 3 / A-11
1 1/2" = 1'-0"

EIFS AT STAIR LANDING

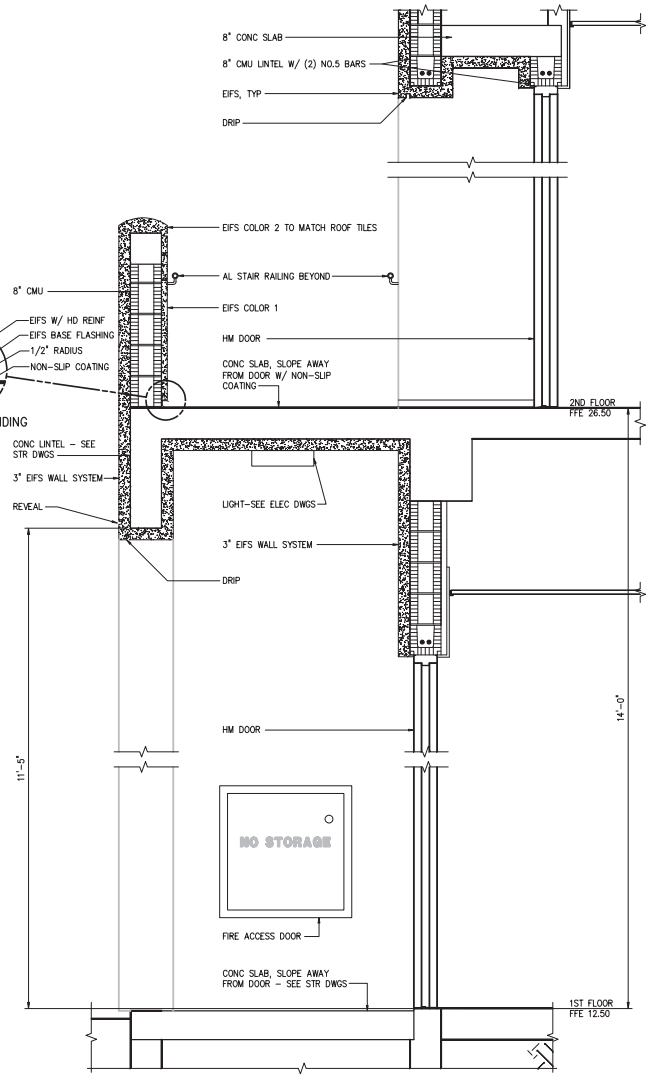

SECTION B / A-03
3/4" = 1'-0"

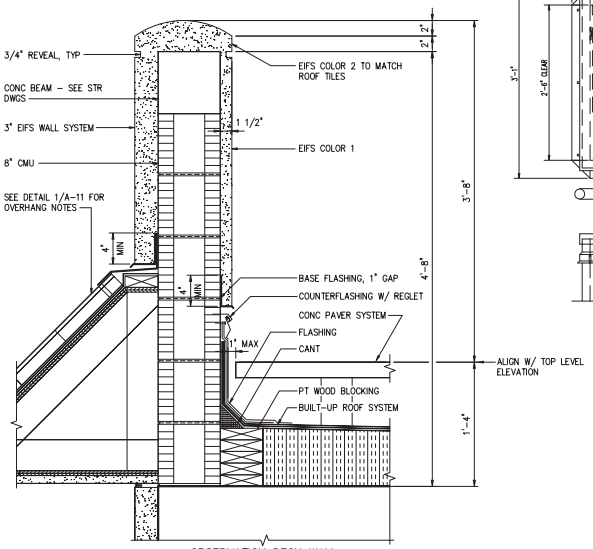

OBSERVATION DECK WALL

DETAIL 2 / A-11
1 1/2" = 1'-0"

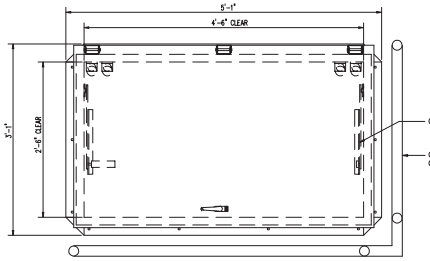

PLAN

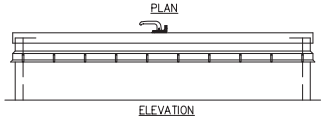

ELEVATION

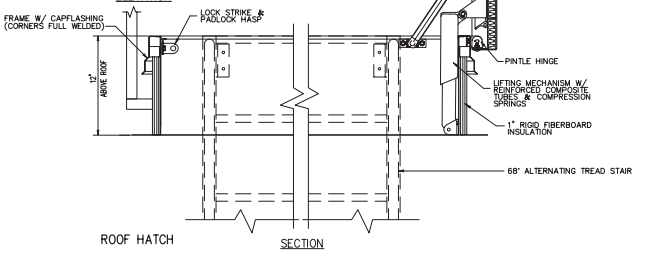

SECTION

ROOF HATCH

DETAIL 4 / A-05
1" = 1'-0"

NO.	DATE	ISSUED FOR	BY
1	07/24/15	REQUEST FOR PROPOSAL	G.A.B.

DESIGNED W.H.R.
DRAWN A.L.B.
CHECKED W.H.R.
PROJ. ENGR. G.A.B.

DEAN AVERY WALDROP R.A.
No. 93380

HAZEN AND SAWYER
Environmental Engineers & Scientists
4000 Hollywood Boulevard, Suite 750N
Hollywood, Florida 33021
Certificate of Authorization Number: 2771

SCALE –

CLIENTS PROJECT: –
ENGINEERS PROJECT: 44238-004
CAD REFERENCE: 44238-004BP3-A11

NORTH MIAMI FLORIDA
CITY OF NORTH MIAMI
PUBLIC WORKS UTILITIES

WINSON WATER TREATMENT PLANT
RELIABILITY IMPROVEMENTS – VOLUME C: WTP REHAB

NEW ADMINISTRATION BUILDING
WALL SECTIONS – SHEET 2

DATE: JULY 2015
SHEET: 200 OF 335
DRAWING: A-11

REQUEST FOR PROPOSAL

PLOT DATE: 7/24/2015 4:32 PM BY: TBOCAS

XREFs= ..\Tblock\44238-004-BP3-TB,..\Base-BP3\A-BP3-Admin-Section-B,..\Base-BP3\A-BP3-Admin-Section-C,.\Arch Details\Bilco Roof Hatch

File = H:\44238-004\Drawings\design build package\volume c - wtp rehab\Bid Package 3 - WTP Rehab\Arch\44238-004BP3-A11 Saved by tbocas Save date = 5/18/2015 11:08 AM

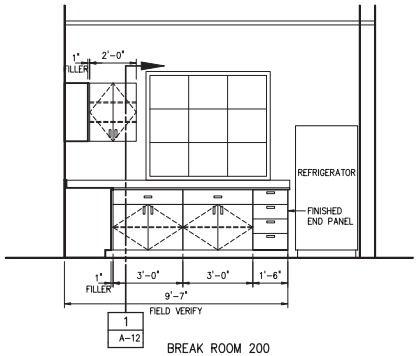

BREAK ROOM 200 CASEWORK
A1 3/8" = 1'-0"

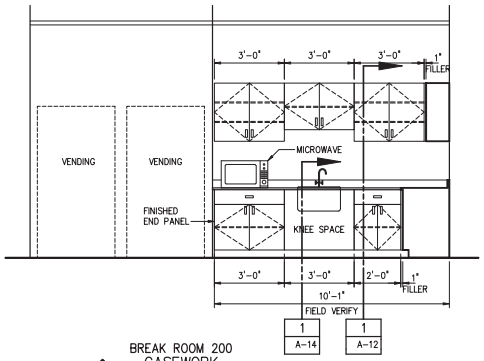

BREAK ROOM 200 CASEWORK
A2 3/8" = 1'-0"

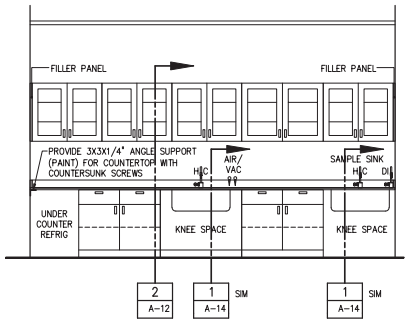

LAB 203 CASEWORK
B1 3/8" = 1'-0"

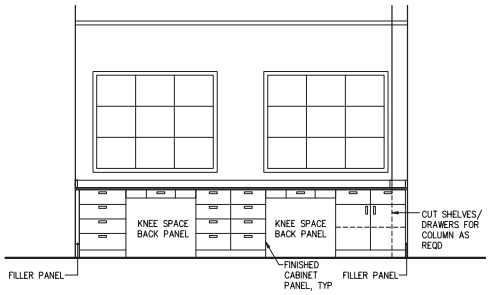

LAB 203 CASEWORK
B2 3/8" = 1'-0"

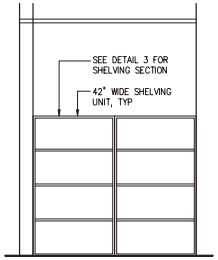

CLOSET 202 CASEWORK
C1 3/8" = 1'-0"

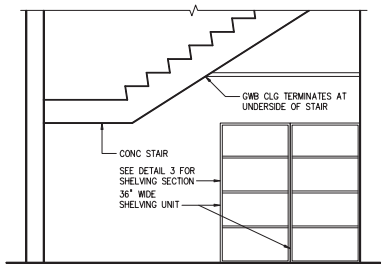

CLOSET 110 CASEWORK
E1 3/8" = 1'-0"

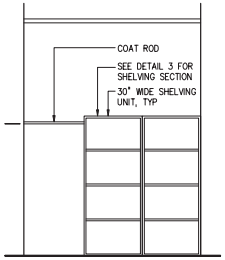

OFFICE 208 CASEWORK
F1 3/8" = 1'-0"

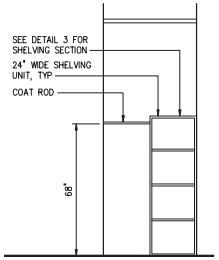

OFFICE 209 CASEWORK
G1 3/8" = 1'-0"

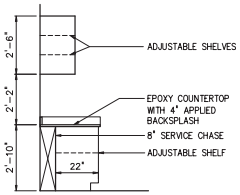

STANDING HEIGHT CASEWORK
DETAIL 2 / A-12
3/8" = 1'-0"

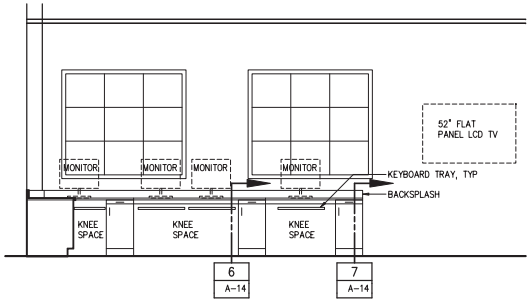

CONTROL ROOM 210 CASEWORK
H1 3/8" = 1'-0"

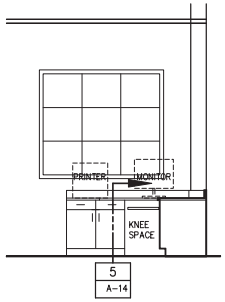

CONTROL ROOM 210 CASEWORK
H2 3/8" = 1'-0"

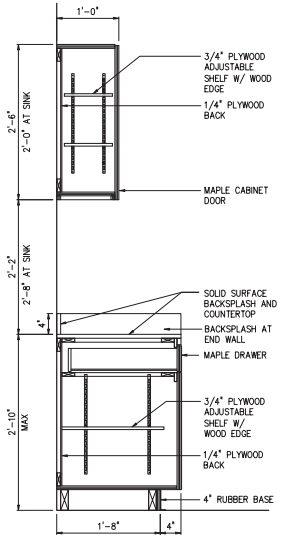

CABINET SECTION TYPICAL
DETAIL 1 / A-12
1" = 1'-0"

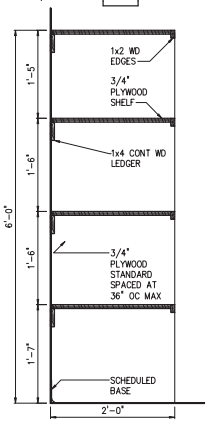

SHELF SECTION
DETAIL 3 / A-12
1" = 1'-0"

NO.	DATE	ISSUED FOR	BY
1	07/24/15	REQUEST FOR PROPOSAL	G.A.B.

DESIGNED W.H.R.
DRAWN A.L.B.
CHECKED W.H.R.
PROJ. ENGR. G.A.B.

DEAN AVERY WALDROP R.A.
No. 93380

HAZEN AND SAWYER
Environmental Engineers & Scientists
4000 Hollywood Boulevard, Suite 750N
Hollywood, Florida 33021
Certificate of Authorization Number: 2771

SCALE –

CLIENTS PROJECT: –
ENGINEERS PROJECT: 44238-004
CAD REFERENCE: 44238-004BP3-A12

NORTH MIAMI FLORIDA
CITY OF NORTH MIAMI
PUBLIC WORKS UTILITIES

WINSON WATER TREATMENT PLANT
RELIABILITY IMPROVEMENTS – VOLUME C: WTP REHAB
NEW ADMINISTRATION BUILDING
ENLARGED FLOOR PLAN AND ELEVATIONS
SHEET 1

DATE: JULY 2015
SHEET: 201 OF 335
DRAWING: A-12

REQUEST FOR PROPOSAL

PLOT DATE: 7/24/2015 4:32 PM BY: TBOCAS

XREFs= ..\Tblock\44238-004-BP3-TB,..\Arch Details\ADM-A-DA,..\Arch Details\A-SD-19-CABINET-DETLS,..\Arch Details\A-LAB-SECTION

File = H:\44238-004\Drawings\design build package\volume c - wtp rehab\Bid Package 3 - WTP Rehab\Arch\44238-004BP3-A12 Saved by tbocas Save date = 5/18/2015 11:08 AM

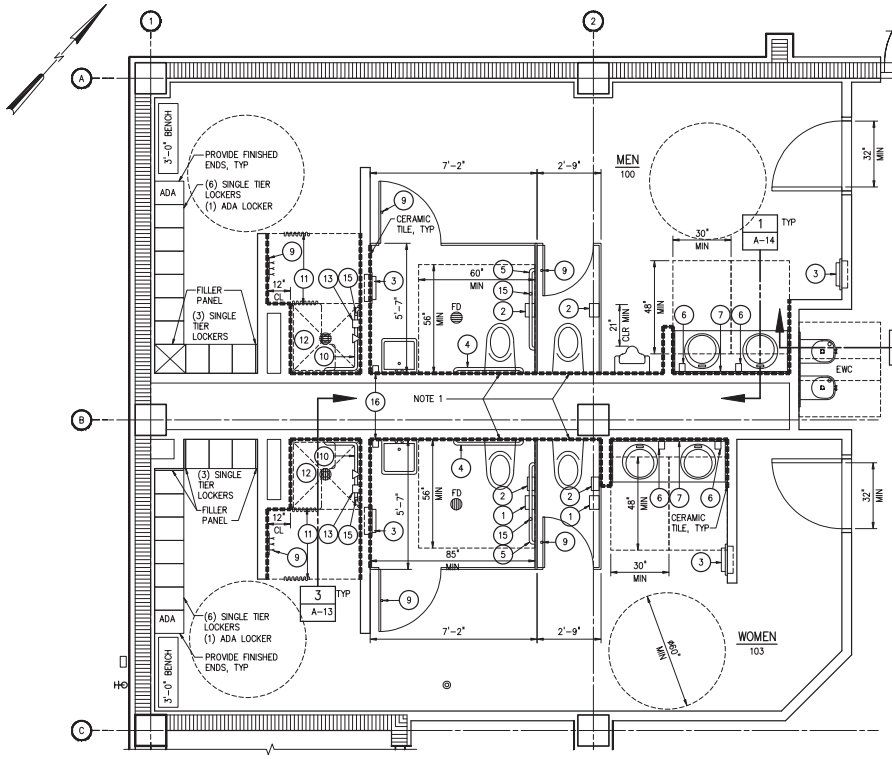

FIRST FLOOR TOILET PLAN

3/8" = 1'-0"

NOTES:

1. COORDINATE STUD PLACEMENT AND TRACK CUT OUT WITH OFFSET TOILET CARRIER LOCATION TO ENSURE CLEARANCES.
2. FLOOR DRAIN IS DISHED – SEE DETAIL 2/S-03.

LEGEND:

CERAMIC TILE – FULL HT UNO

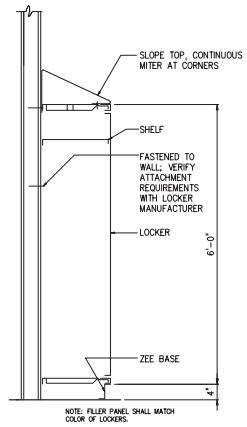

NOTE: FILLER PANEL SHALL MATCH COLOR OF LOCKERS.

LOCKER SECTION

DETAIL 1 / A-13

3/4" = 1'-0"

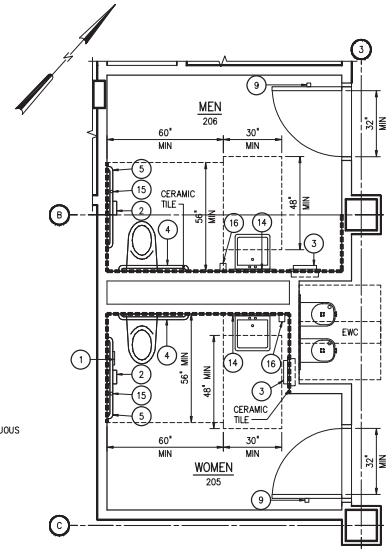

SECOND FLOOR TOILET PLAN

3/8" = 1'-0"

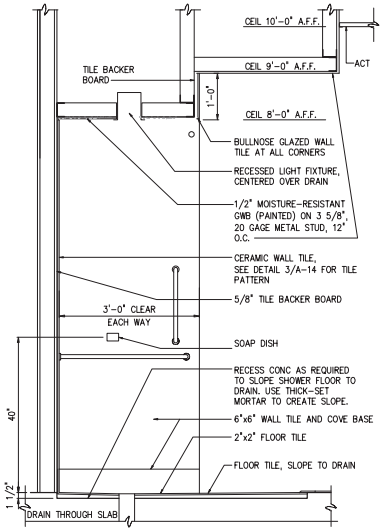

SHOWER SECTION

DETAIL 3 / A-13

3/4" = 1'-0"

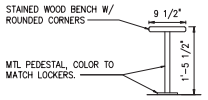

BENCH

DETAIL 2 / A-13

3/4" = 1'-0"

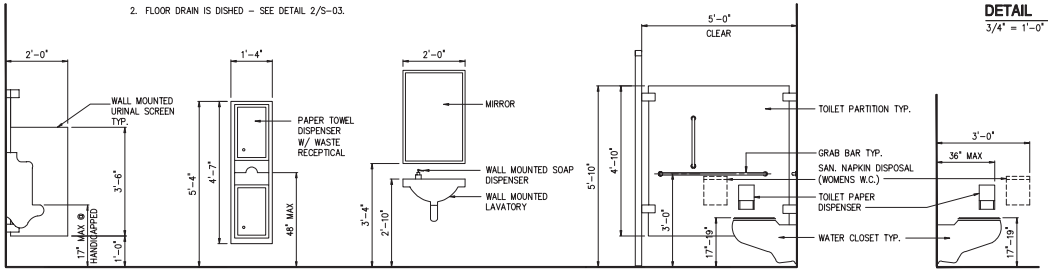

FIXTURE HEIGHTS

DETAIL 4 / A-13

1/2" = 1'-0"

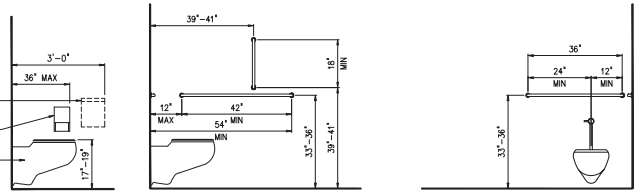

SIDE WALL GRAB BAR FOR WATER CLOSET

REAR WALL GRAB BAR FOR WATER CLOSET

GRAB BAR MOUNTING LOCATIONS

DETAIL 5 / A-13

1/2" = 1'-0"

TOILET ACCESSORY SCHEDULE

(NO)	ITEM	MOUNTING HT. AFF
1	SANITARY NAPKIN DISPOSAL	18" TO BOTTOM
2	TOILET TISSUE DISPENSER	19"
3	PAPER TOWEL DISPENSER AND DISPOSAL	40" TO BOTTOM
4	36" GRAB BAR	33"-36"
5	42" GRAB BAR	33"-36"
6	COUNTER MOUNTED SOAP DISPENSER	--
7	MIRROR: WIDTH OF COUNTER, TO CEILING UNO	38" TO BOTTOM
8	SHELF W/ MOP AND BROOM HOLDER	66" TO SHELF
9	HOOK	54"
10	SHOWER GRAB BAR	33"-36"
11	SHOWER CURTAIN AND ROD	78"
12	FOLDING SHOWER SEAT	18" TO TOP
13	SOAP DISH	40"
14	24" x 36" MIRROR	40" TO BOTTOM
15	18" VERTICAL GRAB BAR	40" TO BOTTOM
16	WALL MOUNTED SOAP DISPENSER	40" TO BOTTOM

NO.	DATE	ISSUED FOR	BY
1	07/24/15	REQUEST FOR PROPOSAL	G.A.B.

DESIGNED W.H.R.
DRAWN A.L.B.
CHECKED W.H.R.
PROJ. ENGR. G.A.B.

DEAN AVERY WALDROP R.A. No. 93380

HAZEN AND SAWYER
Environmental Engineers & Scientists
4000 Hollywood Boulevard, Suite 750N
Hollywood, Florida 33021
Certificate of Authorization Number: 2771

SCALE –

CLIENTS PROJECT: –
ENGINEERS PROJECT: 44238-004
CAD REFERENCE: 44238-004BP3-A13

NORTH MIAMI FLORIDA
CITY OF NORTH MIAMI
PUBLIC WORKS UTILITIES

WINSON WATER TREATMENT PLANT
RELIABILITY IMPROVEMENTS – VOLUME C: WTP REHAB
NEW ADMINISTRATION BUILDING
ENLARGED FLOOR PLAN AND ELEVATIONS
SHEET 2

DATE: JULY 2015
SHEET: 202 OF 335
DRAWING: A-13

REQUEST FOR PROPOSAL

PLOT DATE: 7/24/2015 4:32 PM BY: TBOCAS

XREFs= ..\Tblock\44238-004-BP3-TB,..\Base-BP3\A-BP3-Admin-Plan-Bottom,..\Base-BP3\A-BP3-Admin-Plan-Top,..\Base-BP3\A-BP3-Admin-Plan-Col-Grid,..\Base-BP3\P-BP3-Admin-Plan-Bottom,..\Base-BP3\P-BP3-Admin-Plan-Top,..\Arch Details\A-SD-18-LOCKER ROOM-DETLS,..\Arch Details\A-SD-20-FIXTURE-ELEV

File = H:\44238-004\Drawings\design build package\volume c - wtp rehab\Bid Package 3 - WTP Rehab\Arch\44238-004BP3-A13 Saved by tbocas Save date = 5/18/2015 11:08 AM

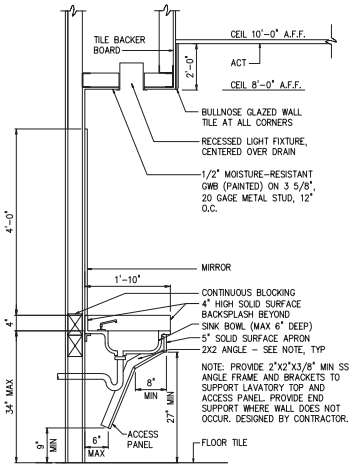

SINK SECTION

DETAIL 1 / A-14
3/4" = 1'-0"

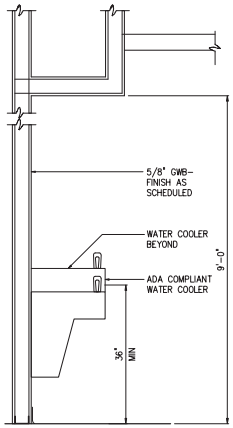

EWC DETAIL

DETAIL 2 / A-14
3/4" = 1'-0"

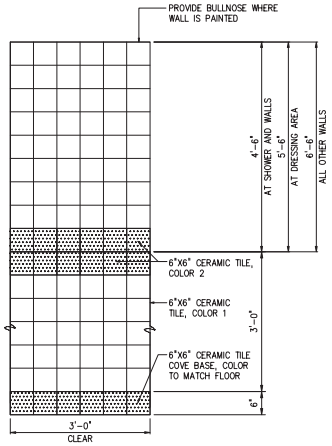

CERAMIC TILE PATTERN

DETAIL 3 / A-14
3/4" = 1'-0"

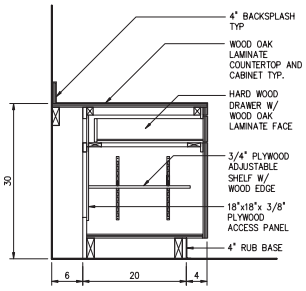

WORKSTATION DRAWER

DETAIL 5 / A-12
1" = 1'-0"

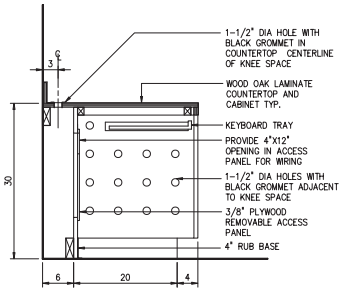

WORKSTATION KEYBOARD TRAY

DETAIL 6 / A-12
1" = 1'-0"

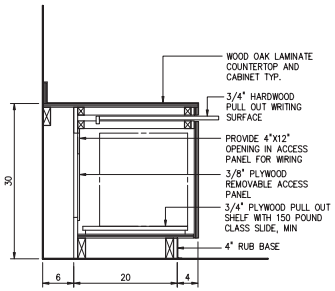

WORKSTATION WRITING TRAY

DETAIL 7 / A-12
1" = 1'-0"

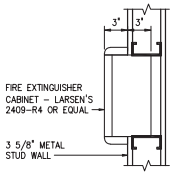

FIRE EXTINGUISHER CABINET

DETAIL 4 / A-14
1 1/2" = 1'-0"

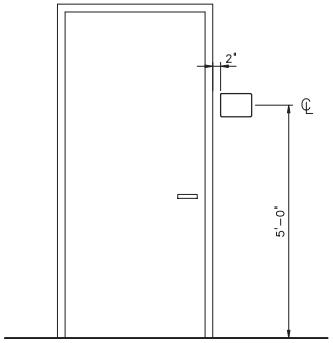

SIGN LOCATOR

DETAIL 12 / A-14
NTS

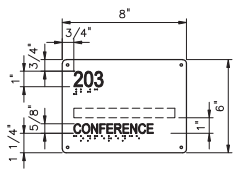

ROOM NAME AND NUMBER

DETAIL 8 / A-14
NTS

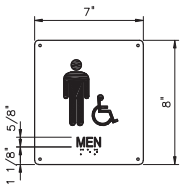

ACCESSIBLE AREAS

DETAIL 9 / A-14
NTS

NO SMOKING SIGN

DETAIL 10 / A-14
NTS

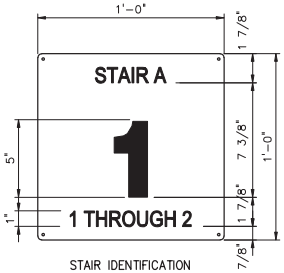

STAIR IDENTIFICATION

DETAIL 11 / A-14
NTS

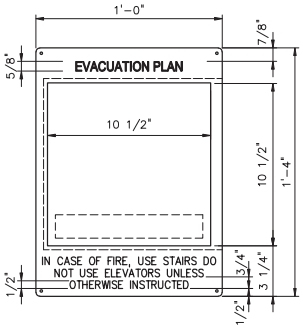

FLOOR DIAGRAM EXIT SIGN

DETAIL 17 / A-14
NTS

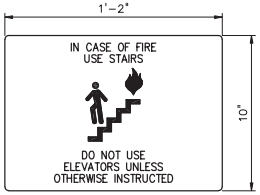

EXIT AND FIRE PREVENTION SIGN

DETAIL 13 / A-14
NTS

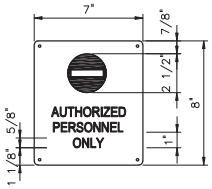

RESTRICTION SIGN

DETAIL 14 / A-14
NTS

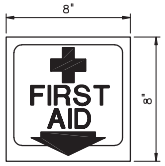

FIRST AID 3-WAY SIGN

DETAIL 15 / A-14
NTS

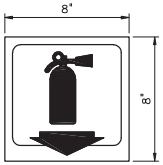

FIRE EQUIPMENT 3-WAY SIGN

DETAIL 16 / A-14
NTS

NO.	DATE	ISSUED FOR	BY
1	08/24/15	REISSUED FOR PROPOSAL	B.A.B.

DESIGNED W.H.R.
DRAWN A.L.B.
CHECKED W.H.R.
PROJ. ENGR. G.A.B.

DEAN AVERY WALDROP R.A.
No. 93380

HAZEN AND SAWYER
Environmental Engineers & Scientists
4000 Hollywood Boulevard, Suite 750N
Hollywood, Florida 33021
Certificate of Authorization Number: 2771

SCALE –

CLIENTS PROJECT: –
ENGINEERS PROJECT: 44238-004
CAD REFERENCE: 44238-004BP3-A14

NORTH MIAMI FLORIDA
CITY OF NORTH MIAMI
PUBLIC WORKS UTILITIES

WINSON WATER TREATMENT PLANT
RELIABILITY IMPROVEMENTS – VOLUME C: WTP REHAB

NEW ADMISTRATION BUILDING
DETAILS

DATE: JULY 2015
SHEET: 203 OF 335
DRAWING: A-14

REQUEST FOR PROPOSAL

PLOT DATE: 7/24/2015 4:32 PM BY: TBLOCAS

XREFs= ..\Tblock\44238-004-BP3-TB,..\Arch Details\A-SD-18-LOCKER ROOM-DETLS,..\Arch Details\A-SD-05-Fire Extinguisher-Cabinet,..\Arch Details\Control Room Cabinets,..\Arch Details\A-SD-66-Signs

File = H:\44238-004\Drawings\design build package\volume c - wtp rehab\Bid Package 3 - WTP Rehab\Arch\44238-004BP3-A14 Saved by ablaha Save date = 5/27/2015 6:16 PM

NOTES:

1. FURNITURE TO BE PROVIDED UNDER ALLOWANCE

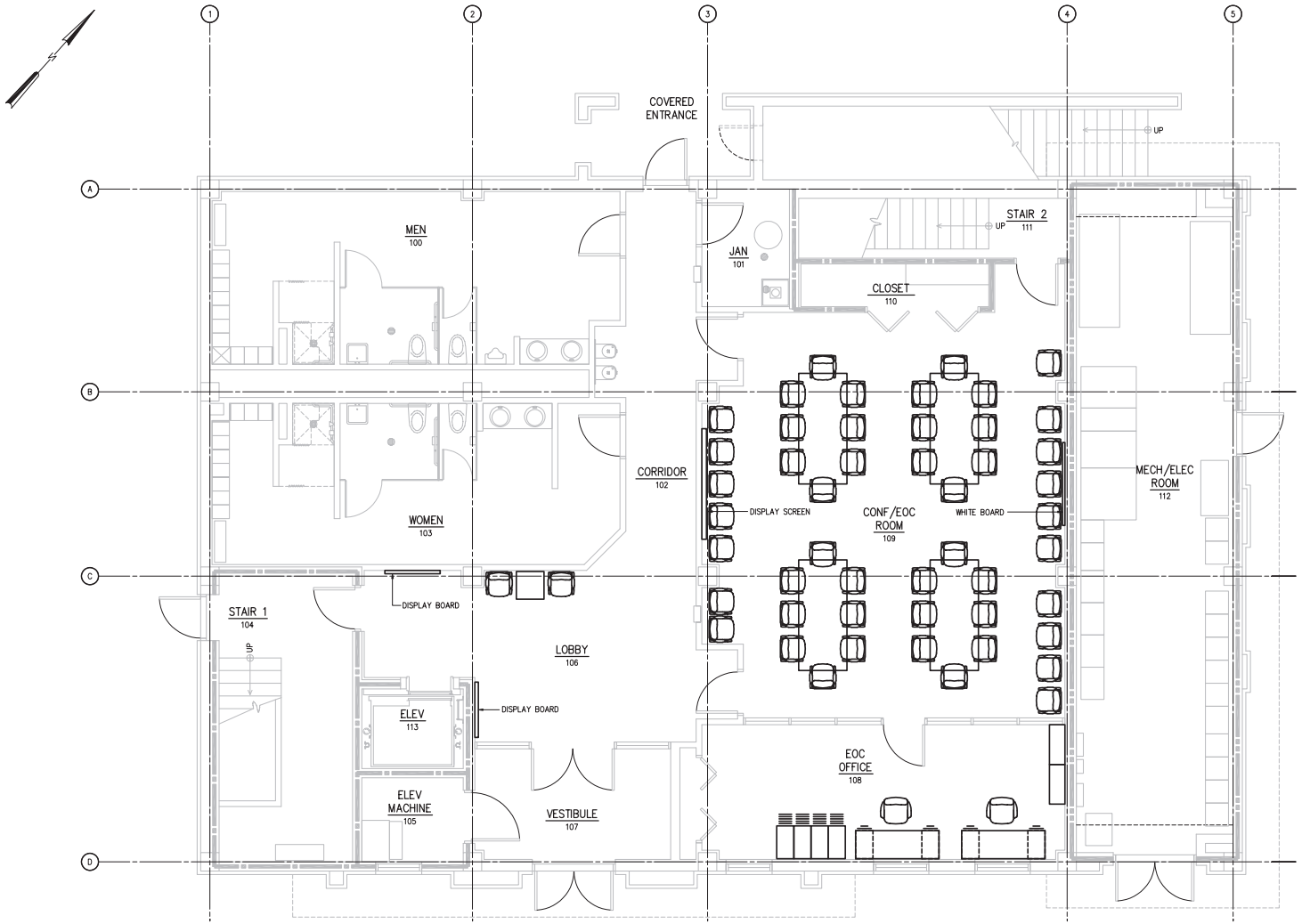

FIRST FLOOR FURNITURE PLAN
1/4" = 1'-0"

NO.	DATE	ISSUED FOR	BY
1	07/24/15	REQUEST FOR PROPOSAL	G.A.B.

DESIGNED W.H.R.
DRAWN A.L.B.
CHECKED W.H.R.
PROJ. ENGR. G.A.B.

DEAN AVERY WALDROP R.A.
No. 93380

HAZEN AND SAWYER
Environmental Engineers & Scientists
4000 Hollywood Boulevard, Suite 750N
Hollywood, Florida 33021
Certificate of Authorization Number: 2771

SCALE –

CLIENTS PROJECT: –
ENGINEERS PROJECT: 44238-004
CAD REFERENCE: 44238-004BP3-A15

NORTH MIAMI FLORIDA
CITY OF NORTH MIAMI
PUBLIC WORKS UTILITIES

WINSON WATER TREATMENT PLANT
RELIABILITY IMPROVEMENTS – VOLUME C: WTP REHAB
NEW ADMINISTRATION BUILDING
FIRST FLOOR FURNITURE PLAN

DATE: JULY 2015
SHEET: 204 OF 335
DRAWING: A-15

REQUEST FOR PROPOSAL

PLOT DATE: 7/24/2015 4:32 PM BY: TBOCAS

XREFs= ..\Tblock\44238-004-BP3-TB,..\Base-BP3\A-BP3-Admin-Plan-Bottom,..\Base-BP3\A-BP3-Admin-Plan-Col-Grid,..\Base-BP3\P-BP3-Admin-Plan-Bottom,..\Base-BP3\E-BP3-Admin-Plan-Bottom,..\Base-BP3\A-BP3-Admin-Plan-Bottom-Furniture

File = H:\44238-004\Drawings\design build package\volume c - wtp rehab\Bid Package 3 - WTP Rehab\Arch\44238-004BP3-A15 Saved by ablaha Save date = 6/6/2014 5:23 PM

NOTES:

1. FURNITURE TO BE PROVIDED UNDER ALLOWANCE

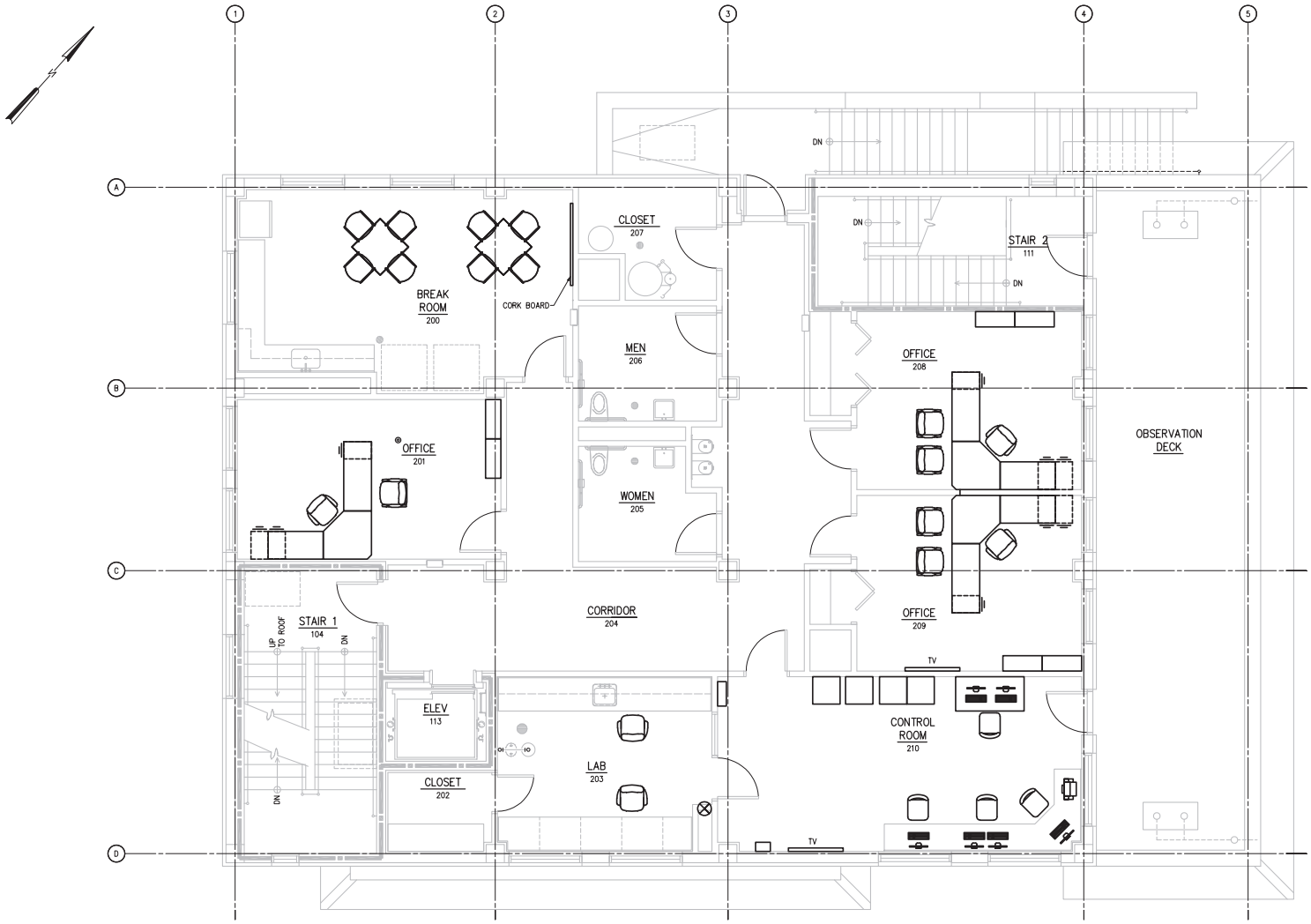

SECOND FLOOR FURNITURE PLAN
1/4" = 1'-0"

NO.	DATE	ISSUED FOR	BY
1	07/24/15	REQUEST FOR PROPOSAL	G.A.B.

DESIGNED W.H.R.
DRAWN A.L.B.
CHECKED W.H.R.
PROJ. ENGR. G.A.B.

DEAN AVERY WALDROP R.A.
No. 93380

HAZEN AND SAWYER
Environmental Engineers & Scientists
4000 Hollywood Boulevard, Suite 750N
Hollywood, Florida 33021
Certificate of Authorization Number: 2771

SCALE –

CLIENTS PROJECT: –
ENGINEERS PROJECT: 44238-004
CAD REFERENCE: 44238-004BP3-A16

NORTH MIAMI FLORIDA
CITY OF NORTH MIAMI
PUBLIC WORKS UTILITIES

WINSON WATER TREATMENT PLANT
RELIABILITY IMPROVEMENTS – VOLUME C: WTP REHAB
NEW ADMINISTRATION BUILDING
SECOND FLOOR FURNITURE PLAN

DATE: JULY 2015
SHEET: 205 OF 335
DRAWING: A-16

REQUEST FOR PROPOSAL

PLOT DATE: 7/24/2015 4:32 PM BY: TBOCAS

XREFs= ...\Tblock\44238-004-BP3-TB,...\Base-BP3\A-BP3-Admin-Plan-Top,...\Base-BP3\A-BP3-Admin-Plan-Col-Grid,...\Base-BP3\P-BP3-Admin-Plan-Top,...\Base-BP3\A-BP3-Admin-Plan-Top-Furniture

File = H:\44238-004\Drawings\design build package\volume c - wtp rehab\Bid Package 3 - WTP Rehab\Arch\44238-004BP3-A16 Saved by ablaha Save date = 6/6/2014 5:23 PM

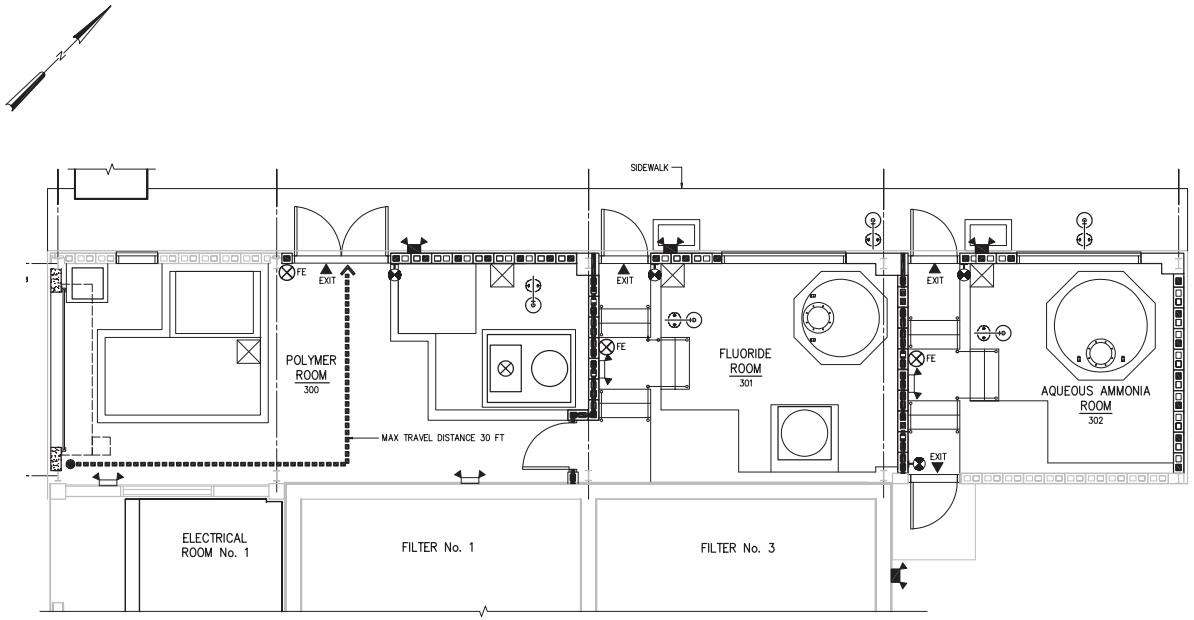

LIFE SAFETY PLAN
1/4" = 1'-0"

LIFE SAFETY ANALYSIS

APPLICABLE CODES:

2010 FLORIDA BUILDING CODE: FUEL GAS (FIRST PRINTING)
2010 FLORIDA BUILDING CODE: MECHANICAL (FIRST PRINTING)
2010 FLORIDA BUILDING CODE: TEST PROTOCOLS (FIRST PRINTING)
2010 FLORIDA BUILDING CODE: ENERGY CONSERVATION (FIRST PRINTING)
2010 FLORIDA BUILDING CODE: ACCESSIBILITY (FIRST PRINTING)
2010 FLORIDA BUILDING CODE: BUILDING (FIRST PRINTING)
2010 FLORIDA BUILDING CODE: EXISTING BUILDING (FIRST PRINTING)
2010 FLORIDA BUILDING CODE: PLUMBING (FIRST PRINTING)
NFPA 101: 2009 EDITION
NATIONAL ELECTRIC CODE, 2008 EDITION

OCCUPANCY CLASSIFICATION:

ORIGINAL CONSTRUCTION 1963 – NO OCCUPANCY
USE WILL BE CLASSIFIED AS F-3 FACTORY
INDUSTRIAL SPECIAL PURPOSE WITH A
SECONDARY STORAGE S-1 OCCUPANCY (SHOWN)

AQUEOUS AMMONIA – CORROSIVE – 1000 GALLONS
MAX QUANTITY PER CONTROL ROOM 1000
GALLONS PER FLORIDA FIRE PREVENTION
CODE TABLE 60.1.26.3.1(b)

FLUORIDE – CORROSIVE/WATER REACTIVE CLASS 1, 750 GALLONS
MAX QUANTITY PER CONTROL ROOM 1000
GALLONS PER FLORIDA FIRE PREVENTION
CODE TABLE 60.1.26.3.1(b)

COAGULANT AID – NOT CLASSIFIED

ANTICOAGULENT COMBUSTIBLE LIQUID IIIB.
MAX QUANTITY PER CONTROL AREA 13,200 GALLONS PER
FLORIDA FIRE PREVENTION CODE TABLE 60.1.26.1

CONSTRUCTION TYPE:

TYPE II-B
UNPROTECTED (UNSPRINKLERED) (PER FBC 602.2)
MAXIMUM NUMBER OF STORIES = 3 (PER FBC TABLE 503)
ACTUAL NUMBER OF STORIES = 1
MAXIMUM AREA (PER FLOOR) = 23,000 SF (PER FBC TABLE 503)
ACTUAL AREA = 1ST FLOOR 1100 SF < 23,000 SF
MAXIMUM BUILDING HEIGHT =55' (PER FBC TABLE 503)
ACTUAL BUILDING HEIGHT = 31'< 55'

OCCUPANT LOAD:

TOTAL OCCUPANT LOAD = 4 (300 PER SF)
CHEMICAL STORAGE FACILITY

EGRESS CAPACITY:

EGRESS CAPACITY EXCEEDS OCCUPANT LOAD.

0.2 INCHES PER OCCUPANT (FBC TABLE 1005.1) AT DOORS

MINIMUM CLEAR OPENING OF EXIT DOORS = 32 INCHES
(FBC 1008.1.1)

1.) OTHER COMPONENTS
BUILDING – 4 OCCUPANTS x 0.2 = 0.8" < 36"

EXIT ACCESS TRAVEL DISTANCE:

STORAGE GROUP "S-1" WITHOUT SPRINKLER SYSTEM
MAXIMUM TRAVEL DISTANCE TO EXIT = 300 FT. (PER FBC TABLE 1015.1)

EXIT ACCESS COMMON PATH OF TRAVEL:

STORAGE GROUP "S-1" WITHOUT SPRINKLER SYSTEM
COMMON PATH OF TRAVEL = 50 FT. (PER FBC 1028.3)

EXIT ACCESS SPACES W/ ONE MEANS OF EGRESS:

STORAGE GROUP "S-1" WITHOUT SPRINKLER SYSTEM
OCCUPANCY GROUP "F" = 50 PERSONS (PER FBC 1014.1)

FIRE PROTECTION REQUIREMENTS:

(PER FBC, 2010, TABLE 601)	
STRUCTURAL FRAME	"0 HRS"
BEARING WALLS (INT)	"0 HRS"
(EXT)	"0 HRS"
BEARING WALLS (EXT)	(SEPARATION >30')
NON-BEARING WALLS (EXT)	NA
CONTROL ROOM	"2 HR"
FLOOR CONSTRUCTION	"0 HR"
ROOF CONSTRUCTION	"0 HR"

FIRE EXTINGUISHER REQUIREMENTS:

GROUP F-3 BLDG. STORAGE, SPECIAL PURPOSE (LOW HAZARD) CLASS A,B,C PER NFPA 10
FLORIDA FIRE PROTECTION CODE (BASED ON NFPA 1, FIRE CODE, 2009 EDITION AND NFPA 101, LIFE SAFETY CODE, 2009 EDITION)
FIRE EXTINGUISHER: 20lb/ 20A-120BC – DRY CHEMICAL DESIGN
CRITERIA: FLOOR AREA = N/A – TRAVEL DISTANCE = 50 FT.

CONTROL ROOMS:

(2) PROVIDED, ONE FOR AQUEOUS AMMONIA AND ONE FOR FLUORIDE ROOM

TACTILE EXIT SIGNS SHALL BE PROVIDED AT EACH EXIT DOOR.

LIFE SAFETY LEGEND

- ENTRANCE/EXIT
- DIRECTION OF TRAVEL
- MOST REMOTE POINT
- FE FIRE EXTINGUISHER
- EMERGENCY LIGHT FIXTURE
- DECORATIVE EMERGENCY LIGHT FIXTURE
- 2-HOUR FIRE RATED CMU WALL
- EXIT SIGN
- EXIT SIGN WALLMOUNT

NO.	DATE	ISSUED FOR	BY
1	07/24/15	REQUEST FOR PROPOSAL	G.A.B.

DESIGNED W.H.R.
DRAWN A.L.B.
CHECKED W.H.R.
PROJ. ENGR. G.A.B.

DEAN AVERY WALDROP R.A.
No. 93380

HAZEN AND SAWYER
Environmental Engineers & Scientists
4000 Hollywood Boulevard, Suite 750N
Hollywood, Florida 33021
Certificate of Authorization Number: 2771

SCALE –

CLIENTS PROJECT: –
ENGINEERS PROJECT: 44238-004
CAD REFERENCE: 44238-004BP3-A17

CITY OF NORTH MIAMI
PUBLIC WORKS UTILITIES

WINSON WATER TREATMENT PLANT
RELIABILITY IMPROVEMENTS – VOLUME C: WTP REHAB
CHEMICAL HANDLING FACILITY
LIFE SAFETY PLAN

DATE: JULY 2015
SHEET: 206 OF 335
DRAWING: A-17

REQUEST FOR PROPOSAL

PLOT DATE: 7/24/2015 4:32 PM BY: TBLOCAS

XREFs= ..\Tblock\44238-004-BP3-TB,..\Base-BP3\S-BP3-ChemHand-Plan,..\Base-BP3\M-BP3-ChemHand-Plan

File = H:\44238-004\Drawings\design build package\volume c - wtp rehab\Bid Package 3 - WTP Rehab\Arch\44238-004BP3-A17 Saved by ablaha Save date = 5/27/2015 6:16 PM

NOTES:

1. SEE DRAWING #### FOR WALL, WALL OPENING AND STAIR DIMENSIONS.
2. NEW MASONRY FACES SHALL RECEIVE A STUCCO FINISH TO MATCH SURFACE TEXTURE AND LINES OF ADJACENT SURFACES.
3. EXTERIOR CHATTAHOOCHIE FINISH SHALL BE SEALED AFTER MASONRY JOINTS ARE REPOINTED. SEALER SHALL BE WET-LOOK BY SEALKRETE OR APPROVED EQUAL.

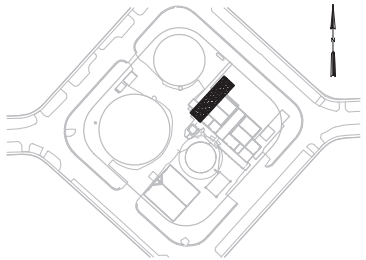

LOCATION MAP

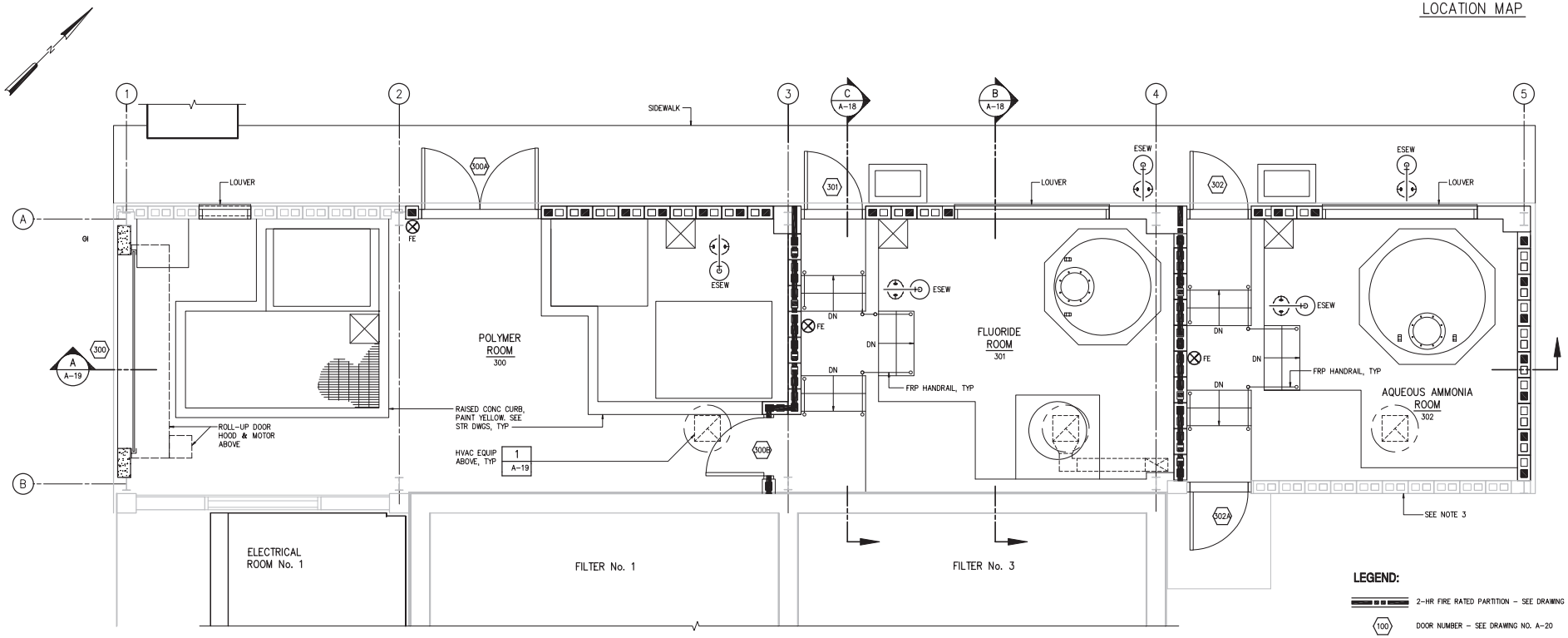

FLOOR PLAN
3/8" = 1'-0"

LEGEND:

- 2-HR FIRE RATED PARTITION – SEE DRAWING NO. A-26
- 100 DOOR NUMBER – SEE DRAWING NO. A-20
- FE FIRE EXTINGUISHER – DRY CHEMICAL
- W-1 FIRE EXTINGUISHER CABINET – DRY CHEMICAL
- P1 PARTITION TYPE – SEE DRAWING NO. A-24

NO.	DATE	ISSUED FOR	BY
1	07/24/15	REQUEST FOR PROPOSAL	G.A.B.

DESIGNED W.H.R.
DRAWN A.L.B.
CHECKED W.H.R.
PROJ. ENGR. G.A.B.

DEAN AVERY WALDROP R.A. No. 93380

HAZEN AND SAWYER
Environmental Engineers & Scientists
4000 Hollywood Boulevard, Suite 750N
Hollywood, Florida 33021
Certificate of Authorization Number: 2771

SCALE –

CLIENTS PROJECT: –
ENGINEERS PROJECT: 44238-004
CAD REFERENCE: 44238-004BP3-A18

NORTH MIAMI FLORIDA
CITY OF NORTH MIAMI
PUBLIC WORKS UTILITIES

WINSON WATER TREATMENT PLANT
RELIABILITY IMPROVEMENTS – VOLUME C: WTP REHAB

CHEMICAL HANDLING FACILITY
PROPOSED PLAN

DATE: JULY 2015
SHEET: 207 OF 335
DRAWING: A-18

REQUEST FOR PROPOSAL

PLOT DATE: 7/24/2015 4:32 PM BY: TBOCAS

XREFs= ..\Tblock\44238-004-BP3-TB,..\Base-BP3\S-BP3-ChemHand-Plan,..\Base-BP3\M-BP3-ChemHand-Plan,..\Base-BP3\H-BP3-ChemHand-Plan

File = H:\44238-004\Drawings\design build package\volume c - wtp rehab\Bid Package 3 - WTP Rehab\Arch\44238-004BP3-A18 Saved by ablaha Save date = 6/6/2014 5:23 PM

NOTES:

1. NOT ALL OBJECTS BEYOND ARE SHOWN.

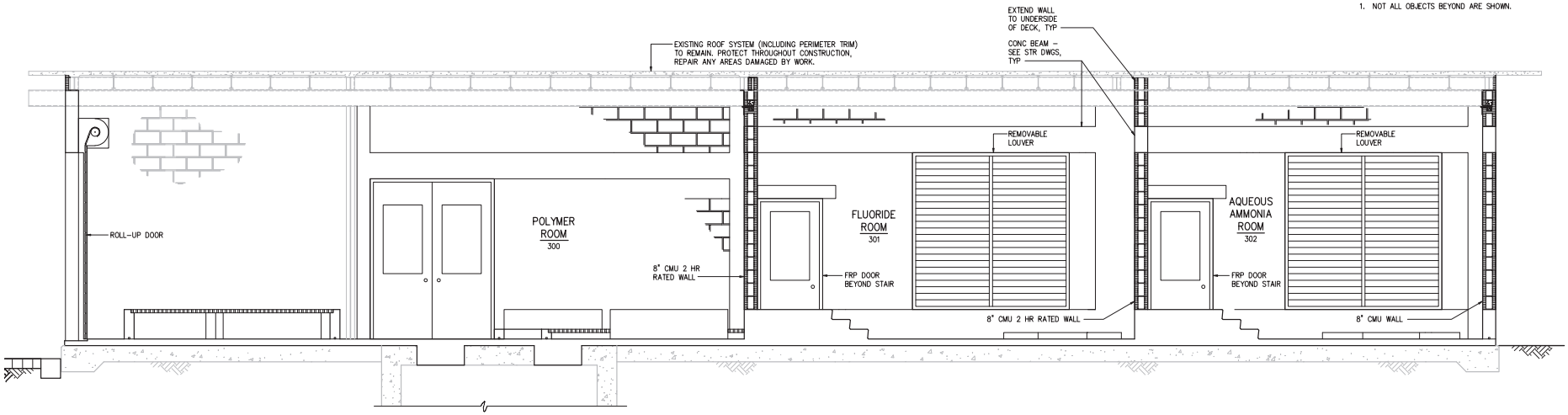

NOTE: FRP HANDRAIL NOT SHOWN FOR CLARITY

SECTION A / A-18
3/8" = 1'-0"

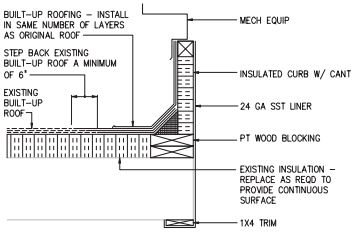

ROOF EQUIPMENT CURB

DETAIL 1 / A-18
1 1/2" = 1'-0"

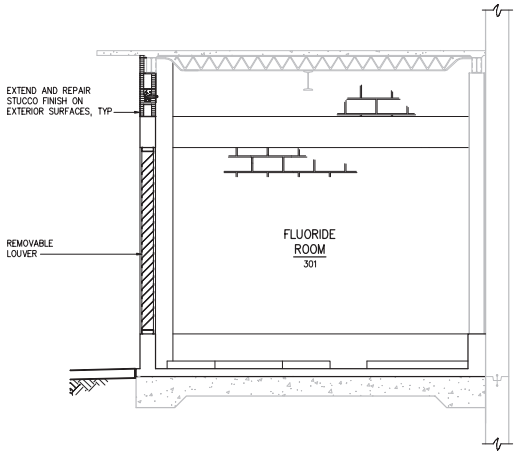

SECTION B / A-18
3/8" = 1'-0"

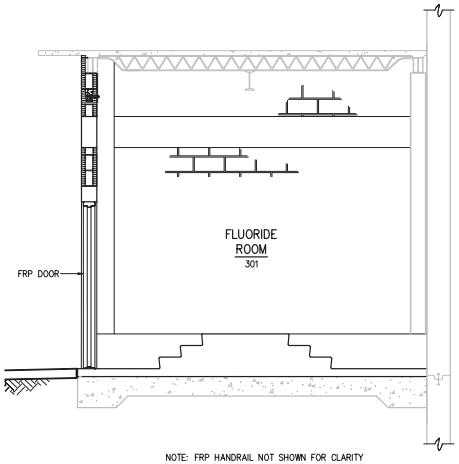

NOTE: FRP HANDRAIL NOT SHOWN FOR CLARITY

SECTION C / A-18
3/8" = 1'-0"

NO.	DATE	ISSUED FOR	BY
1	07/24/15	REQUEST FOR PROPOSAL	G.A.B.

DESIGNED W.H.R.
DRAWN A.L.B.
CHECKED W.H.R.
PROJ. ENGR. G.A.B.

DEAN AVERY WALDROP R.A.
No. 93380

HAZEN AND SAWYER
Environmental Engineers & Scientists
4000 Hollywood Boulevard, Suite 750N
Hollywood, Florida 33021
Certificate of Authorization Number: 2771

SCALE –

CLIENTS PROJECT: –
ENGINEERS PROJECT: 44238-004
CAD REFERENCE: 44238-004BP3-A19

NORTH MIAMI FLORIDA
CITY OF NORTH MIAMI
PUBLIC WORKS UTILITIES

WINSON WATER TREATMENT PLANT
RELIABILITY IMPROVEMENTS – VOLUME C: WTP REHAB

CHEMICAL HANDLING FACILITY
SECTIONS AND DETAILS

DATE: JULY 2015
SHEET: 208 OF 335
DRAWING: A-19

REQUEST FOR PROPOSAL

PLOT DATE: 7/24/2015 4:32 PM BY: TBOCAS

XREFs= ..\Tblock\44238-004-BP3-TB,..\Base-BP3\S-BP3-ChemHand-Sections,.\Arch Details\A-SD-35-Roof Curb

File = H:\44238-004\Drawings\design build package\volume c - wtp rehab\Bid Package 3 - WTP Rehab\Arch\44238-004BP3-A19 Saved by ablaha Save date = 6/6/2014 5:23 PM

ROOM FINISH SCHEDULE

NO.	DESCRIPTION	FLOOR		BASE		WALL-NORTH		WALL-EAST		WALL-SOUTH		WALL-WEST		CEILING			REMARKS
		SUBSTRATE	FINISH	SUBSTRATE	FINISH	SUBSTRATE	FINISH	SUBSTRATE	FINISH	SUBSTRATE	FINISH	SUBSTRATE	FINISH	SUBSTRATE	FINISH	HEIGHT	
CHEMICAL HANDLING FACILITY – SEE DRAWING A-18																	
300	POLYMER ROOM	CONC	SEALER	CONC/CMU	PT	CONC/CMU	PT	CONC/CMU	PT	EX CONC	PT	CONC/CMU	PT	EXP	PT	12'-8"	NOTE 1
301	FLUORIDE ROOM	CONC	SEALER	CONC/CMU	PT	CONC/CMU	PT	CONC/CMU	PT	EX CONC	PT	CONC/CMU	PT	EXP	PT	12'-8"	NOTE 1
302	AQUEOUS AMMONIA RM	CONC	SEALER	CONC/CMU	PT	CONC/CMU	PT	CONC/CMU	PT	EX CMU	PT	CONC/CMU	PT	EXP	PT	12'-8"	NOTE 1

FINISH LEGEND

CL	CONTAINMENT LINER	EXP	EXPOSED STRUCTURE
CMU	CONCRETE MASONRY UNIT	MFR	MANUFACTURER'S SPECIFIED FINISH
CONC	CONCRETE	PT	PAINT

ROOM FINISH SCHEDULE NOTES

1. CONTAINMENT LINER IN CHEMICAL CONTAINMENT AREAS.

DOOR SCHEDULE

NO.	FRAME		DOOR					DETAILS			GLAZING	LOUVER	FIRE LABEL	FINISH	HDWR NO	THRSHLD	WIND PRESSURE		REMARKS
	TYPE	MATL	TYPE	MATL	WIDTH	HEIGHT	THICKNESS	HEAD	JAMB	SILL							NEG.	POS.	
CHEMICAL HANDLING FACILITY – SEE DRAWING A-18																			
300	MFR	STEEL	C	AL	10'-0"	9'-7"	3/4"	3/A-20	3/A-20	3/A-20	MFR	--	--	MFR	MFR	--	38 PSF	34 PSF	NOTES 1,2
300A	F-1	FRP	B	FRP	(2) 3'-0"	8'-0"	1 3/4"	2/A-20	2/A-20	2/A-20	IG	--	--	MFR	4	AL	40 PSF	36 PSF	
300B	F-1	FRP	A	FRP	3'-0"	7'-0"	1 3/4"	1/A-20	1/A-20	1/A-20	FG	--	90 MIN	MFR	3	--	--	--	
301	F-1	FRP	B	FRP	3'-0"	7'-0"	1 3/4"	1/A-20	1/A-20	1/A-20	IG	--	--	MFR	3	AL	41 PSF	38 PSF	
302	F-1	FRP	B	FRP	3'-0"	7'-0"	1 3/4"	1/A-20	1/A-20	1/A-20	IG	--	--	MFR	3	AL	41 PSF	38 PSF	
302A	F-1	FRP	B	FRP	3'-0"	7'-0"	1 3/4"	1/A-20	1/A-20	1/A-20	IG	--	--	MFR	3	AL	41 PSF	38 PSF	

DOOR LEGEND

AL	ALUMINUM	PT	PAINT
FG	FIRE GLASS	STL	STEEL
FRP	FIBERGLASS REINFORCED PLASTIC	TG	TEMPERED GLASS
IG	INSULATING GLASS		
MFR	MANUFACTURER'S STANDARD		

DOOR SCHEDULE NOTES

1. PROVIDE MOTORIZED DOOR OPERATOR. SEE ELEC DRAWINGS.
2. PAINT FRAME.

FRAME TYPES 1/4" = 1'-0"

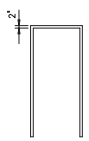

F-1

DOOR TYPES 1/4" = 1'-0"

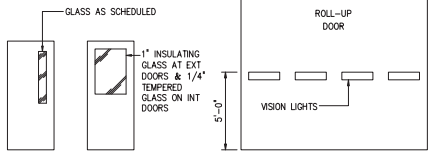

A B C

FRAME PROFILES 3" = 1'-0"

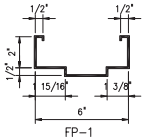

FP-1

THRESHOLD TYPES 3" = 1'-0"

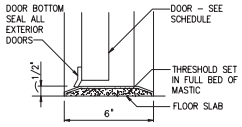

AL

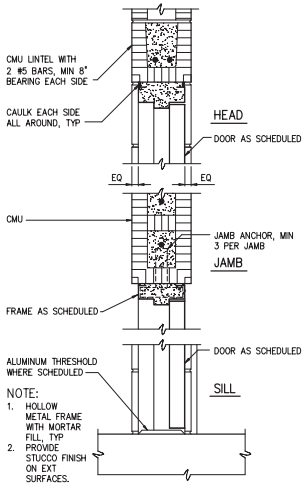

SINGLE DOOR

DETAIL 1 (A-20) 1 1/2" = 1'-0"

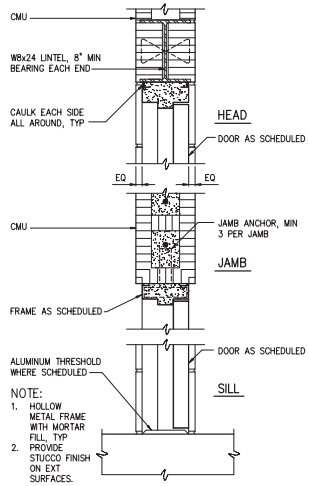

DOUBLE DOOR

DETAIL 2 (A-20) 1 1/2" = 1'-0"

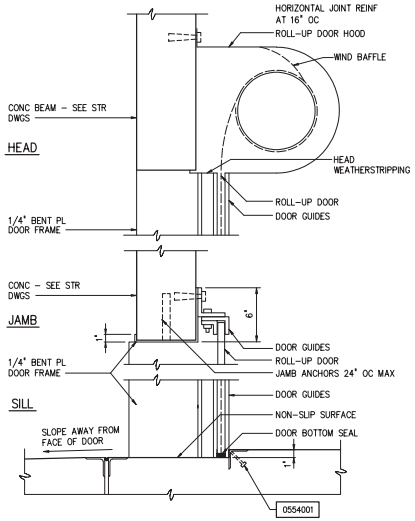

ROLL-UP DOOR

DETAIL 3 (A-20) 1 1/2" = 1'-0"

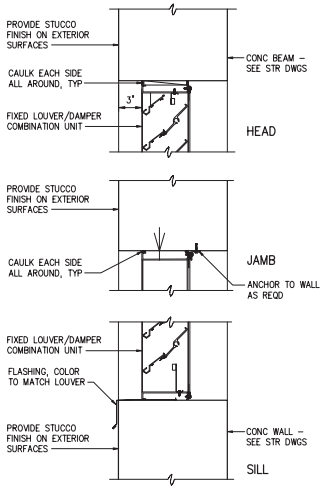

LOUVER

DETAIL 4 (A-20) 1 1/2" = 1'-0"

NO.	DATE	ISSUED FOR	BY
1	07/24/15	REQUEST FOR PROPOSAL	G.A.B.

DESIGNED W.H.R.
DRAWN A.L.B.
CHECKED W.H.R.
PROJ. ENGR. G.A.B.

DEAN AVERY WALDROP R.A.
No. 93380

HAZEN AND SAWYER
Environmental Engineers & Scientists
4000 Hollywood Boulevard, Suite 750N
Hollywood, Florida 33021
Certificate of Authorization Number: 2771

SCALE –

CLIENTS PROJECT: –
ENGINEERS PROJECT: 44238-004
CAD REFERENCE: 44238-004BP3-A20

NORTH MIAMI FLORIDA
CITY OF NORTH MIAMI
PUBLIC WORKS UTILITIES

WINSON WATER TREATMENT PLANT
RELIABILITY IMPROVEMENTS – VOLUME C: WTP REHAB

CHEMICAL HANDLING FACILITY
SCHEDULES AND DETAILS

DATE: JULY 2015
SHEET: 209 OF 335
DRAWING: A-20

REQUEST FOR PROPOSAL

PLOT DATE: 7/24/2015 4:33 PM BY: TBOCAS

XREFs= ..\Tblock\44238-004-BP3-TB,..\Arch Details\A-SD-01-Door Details,..\Arch Details\A-SD-02-WINDOW&LOUVER-DETAILS

File = H:\44238-004\Drawings\design build package\volume c - wtp rehab\Bid Package 3 - WTP Rehab\Arch\44238-004BP3-A20 Saved by tbocas Save date = 5/18/2015 11:08 AM

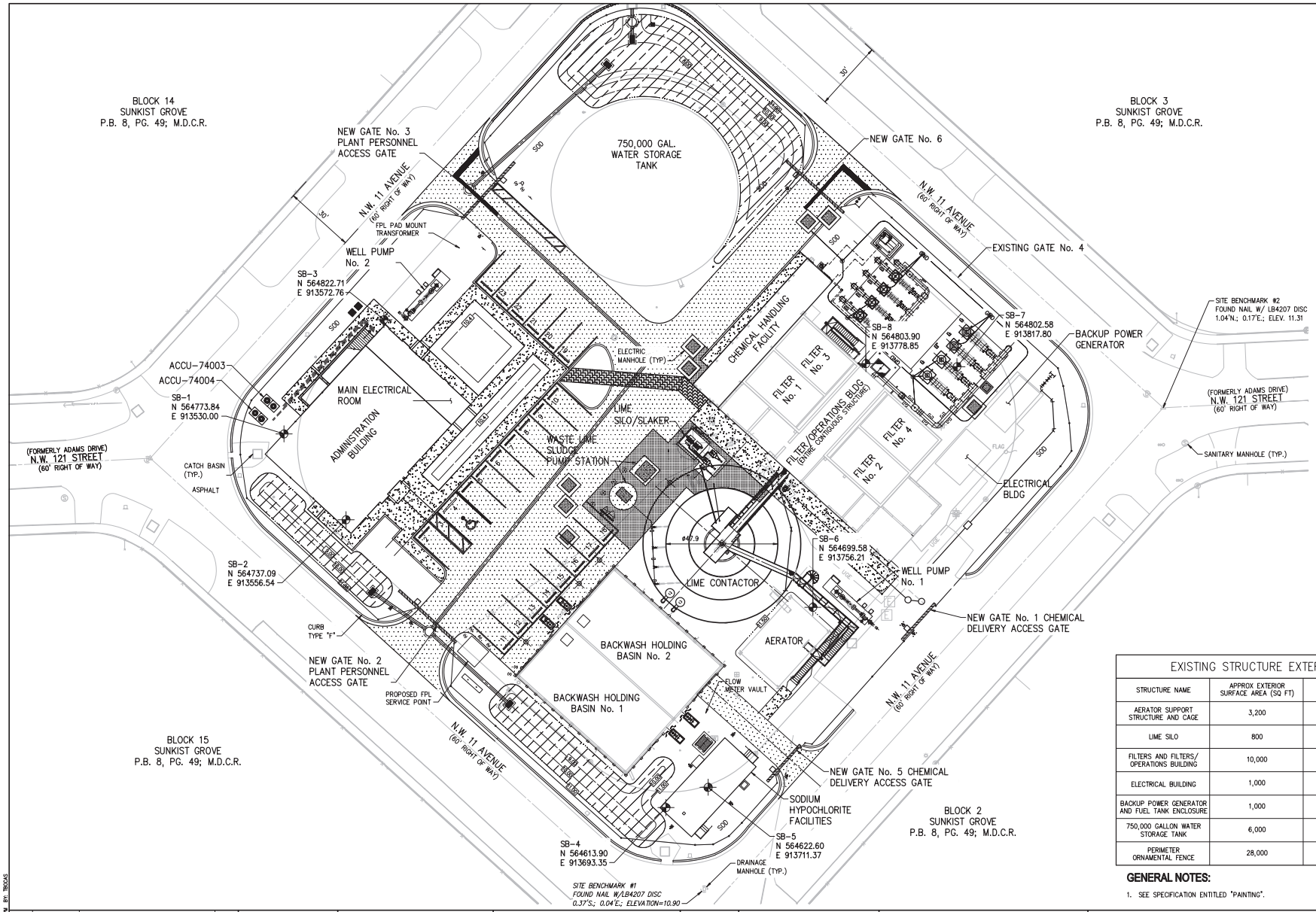

EXISTING STRUCTURE EXTERIOR PAINT SCHEDULE			
STRUCTURE NAME	APPROX EXTERIOR SURFACE AREA (SQ FT)	DOOR, WINDOWS & LOUVERS (SQ FT)	APPROX MAXIMUM HEIGHT OF STRUCTURE (FEET)
AERATOR SUPPORT STRUCTURE AND CAGE	3,200	--	35
LIME SILO	800	--	40
FILTERS AND FILTERS/ OPERATIONS BUILDING	10,000	750	35
ELECTRICAL BUILDING	1,000	100	15
BACKUP POWER GENERATOR AND FUEL TANK ENCLOSURE	1,000	100	15
750,000 GALLON WATER STORAGE TANK	6,000	--	25
PERIMETER ORNAMENTAL FENCE	28,000	--	12

GENERAL NOTES:

1. SEE SPECIFICATION ENTITLED "PAINTING".

NO.	DATE	ISSUED FOR	BY
1	07/24/15	REQUEST FOR PROPOSAL	G.A.B.

DESIGNED W.H.R.
DRAWN A.L.B.
CHECKED W.H.R.
PROJ. ENGR. G.A.B.

DEAN AVERY WALDROP P.E.
No. 93380

HAZEN AND SAWYER
Environmental Engineers & Scientists
4000 Hollywood Boulevard, Suite 750N
Hollywood, Florida 33021
Certificate of Authorization Number: 2771

SCALE –

CLIENTS PROJECT: –
ENGINEERS PROJECT: 44238-004
CAD REFERENCE: 44238-004BP3-A21

NORTH MIAMI FLORIDA
CITY OF NORTH MIAMI
PUBLIC WORKS UTILITIES

WINSON WATER TREATMENT PLANT
RELIABILITY IMPROVEMENTS – VOLUME C: WTP REHAB

EXISTING WTP EXTERIOR PAINTING

DATE: JULY 2015
SHEET: 210 OF 335
DRAWING: A-21

REQUEST FOR PROPOSAL

PLOT DATE: 7/24/2015 4:33 PM BY: TBOCAS

File = H:\44238-004\Drawings\design build package\volume c - wtp rehab\Bid Package 3 - WTP Rehab\Arch\44238-004BP3-A21 Saved by HScalll Save date = 6/6/2014 5:23 PM

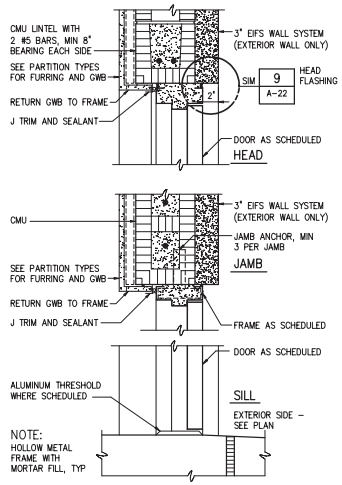

EXTERIOR SINGLE DOOR

DETAIL 1 (A-01) 1 1/2" = 1'-0"

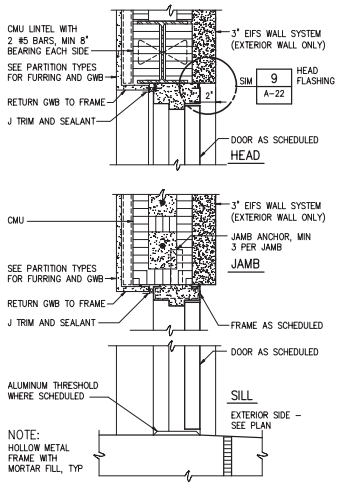

EXTERIOR DOUBLE DOOR

DETAIL 2 (A-01) 1 1/2" = 1'-0"

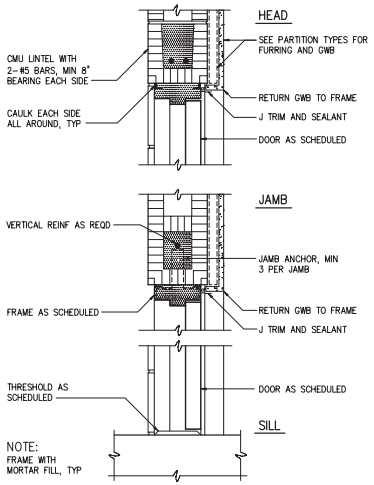

INTERIOR SINGLE DOOR

DETAIL 3 (A-01) 1 1/2" = 1'-0"

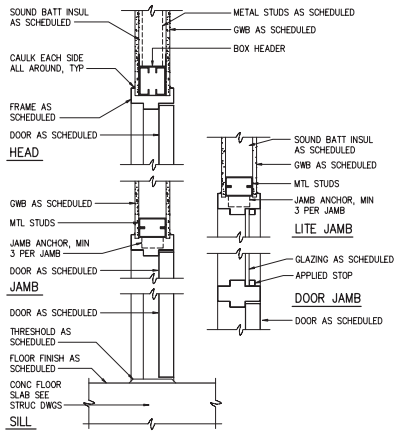

INTERIOR DOOR IN METAL STUD

DETAIL 4 (A-01) 1 1/2" = 1'-0"

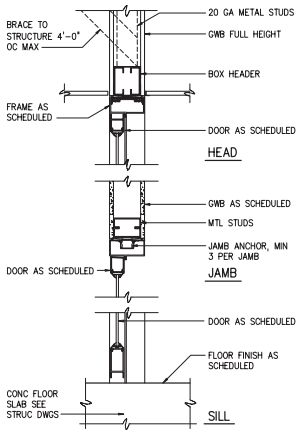

INTERIOR DOOR IN STOREFRONT

DETAIL 5 (A-01) 1 1/2" = 1'-0"

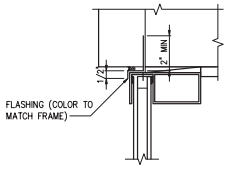

HEAD FLASHING

DETAIL 9 (A-22) NTS

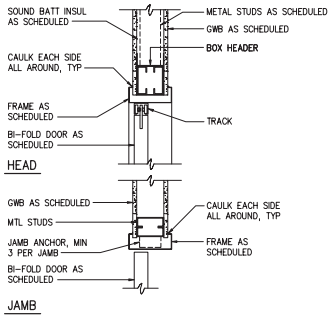

INTERIOR BI-FOLD DOOR

DETAIL 6 (A-01) 1 1/2" = 1'-0"

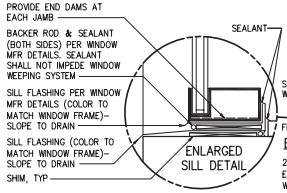

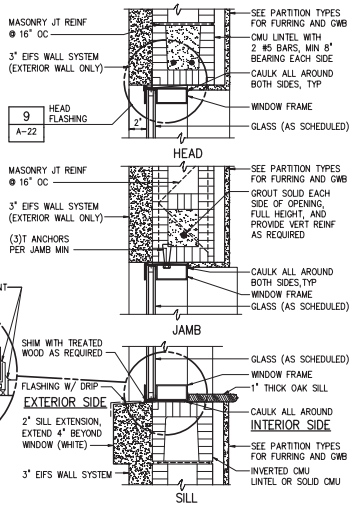

EXTERIOR WINDOW

DETAIL 7 (A-22) 1 1/2" = 1'-0"

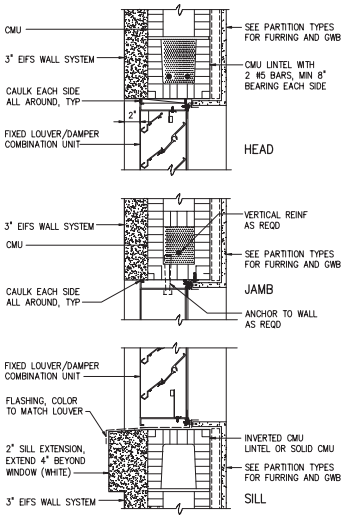

LOUVER

DETAIL 8 (A-22) 1 1/2" = 1'-0"

NO.	DATE	ISSUED FOR	BY
1	07/24/15	REQUEST FOR PROPOSAL	G.A.B.

DESIGNED W.H.R.
DRAWN A.L.B.
CHECKED W.H.R.
PROJ. ENGR. G.A.B.

DEAN AVERY WALDROP R.A.
No. 93380

HAZEN AND SAWYER
Environmental Engineers & Scientists
4000 Hollywood Boulevard, Suite 750N
Hollywood, Florida 33021
Certificate of Authorization Number: 2771

SCALE –

CLIENTS PROJECT: –
ENGINEERS PROJECT: 44238-004
CAD REFERENCE: 44238-004BP3-A22

NORTH MIAMI FLORIDA
CITY OF NORTH MIAMI
PUBLIC WORKS UTILITIES

WINSON WATER TREATMENT PLANT
RELIABILITY IMPROVEMENTS – VOLUME C: WTP REHAB

STANDARD ARCHITECTURAL DETAILS
SHEET 1

DATE: JULY 2015
SHEET: 211 OF 335
DRAWING: A-22

REQUEST FOR PROPOSAL

PLOT DATE: 7/24/2015 4:33 PM BY: TBOCAS

XREFs= ..\Tblock\44238-004-BP3-TB,..\Arch Details\A-SD-01-Door Details,..\Arch Details\D418000

File = H:\44238-004\Drawings\design build package\volume c - wtp rehab\Bid Package 3 - WTP Rehab\Arch\44238-004BP3-A22 Saved by tbocas Save date = 5/18/2015 11:08 AM

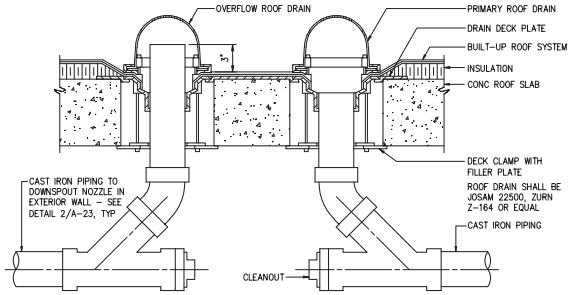

ALL ROOFING DETAILS SHALL BE IN ACCORDANCE WITH MANUFACTURER'S RECOMMENDATIONS AND MIAMI DADE COUNTY NOA

ROOF DRAIN

DETAIL 1 / A-23
NTS

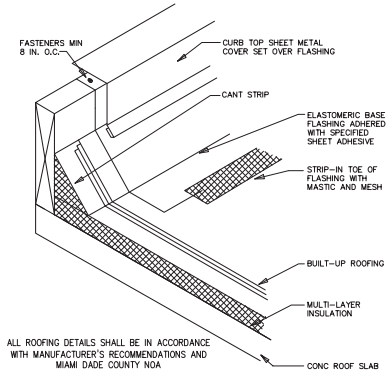

ALL ROOFING DETAILS SHALL BE IN ACCORDANCE WITH MANUFACTURER'S RECOMMENDATIONS AND MIAMI DADE COUNTY NOA

CURB FLASHING

DETAIL 5 / A-23
NTS

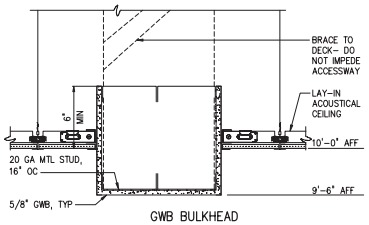

GWB BULKHEAD

DETAIL 6 / A-07
1 1/2" = 1'-0"

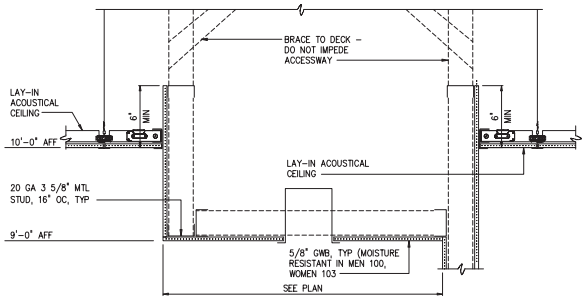

GWB SOFFIT

DETAIL 7 / A-06
1 1/2" = 1'-0"

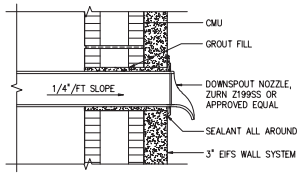

OVERFLOW NOZZLE

DETAIL 2 / A-23
1 1/2" = 1'-0"

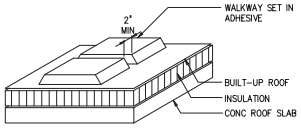

PAVER WALKWAY PROTECTION
BUILT-UP ROOFING

0753411
NTS

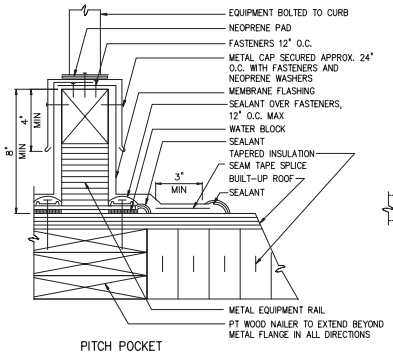

PITCH POCKET
BUILT-UP ROOFING

0753214
3"=1'-0"

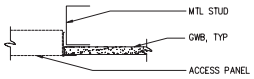

ACCESS PANEL IN GWB WALL

DETAIL 8 / A-23
3" = 1'-0"

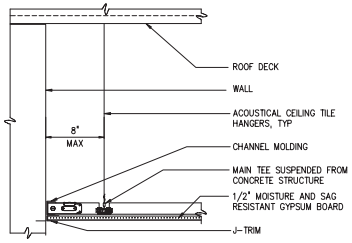

GWB CEILING AT WALL

DETAIL 9 / A-23
1 1/2" = 1'-0"

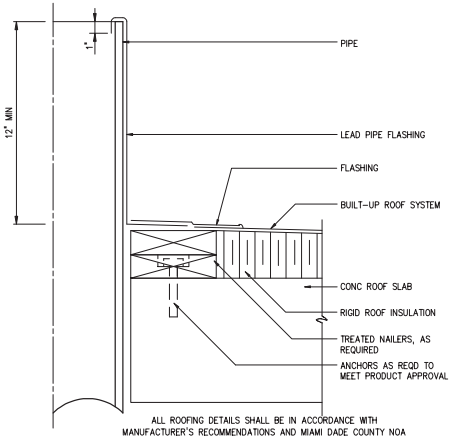

ALL ROOFING DETAILS SHALL BE IN ACCORDANCE WITH MANUFACTURER'S RECOMMENDATIONS AND MIAMI DADE COUNTY NOA

PIPE THRU ROOF

DETAIL 4 / A-23
NTS

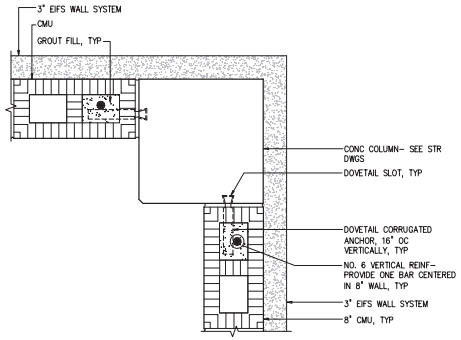

TYPICAL COLUMN

DETAIL 10 / A-03
1 1/2" = 1'-0"

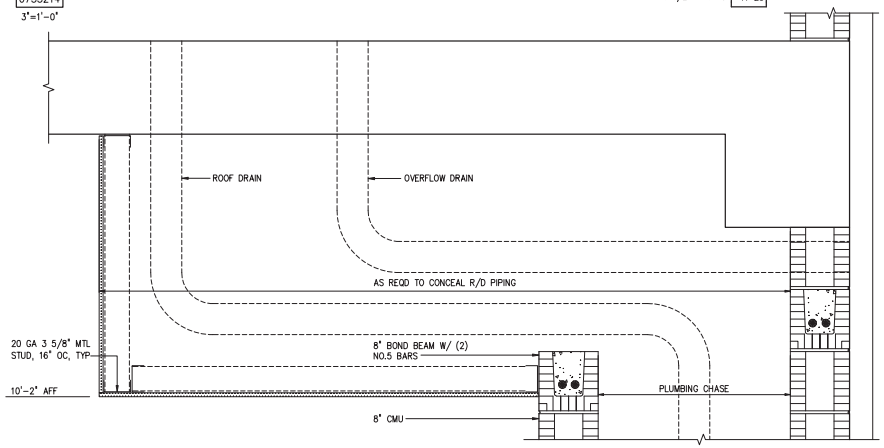

ROOF DRAIN FURR DOWN AND CHASE

DETAIL 11 / A-23
1 1/2" = 1'-0"

NO.	DATE	ISSUED FOR	BY
1	07/24/15	REQUEST FOR PROPOSAL	G.A.B.

DESIGNED W.H.R.
DRAWN A.L.B.
CHECKED W.H.R.
PROJ. ENGR. G.A.B.

DEAN AVERY WALDROP R.A.
No. 93380

HAZEN AND SAWYER
Environmental Engineers & Scientists
4000 Hollywood Boulevard, Suite 750N
Hollywood, Florida 33021
Certificate of Authorization Number: 2771

SCALE –

CLIENTS PROJECT: –
ENGINEERS PROJECT: 44238-004
CAD REFERENCE: 44238-004BP3-A23

NORTH MIAMI FLORIDA
CITY OF NORTH MIAMI
PUBLIC WORKS UTILITIES

WINSON WATER TREATMENT PLANT
RELIABILITY IMPROVEMENTS – VOLUME C: WTP REHAB

STANDARD ARCHITECTURAL DETAILS
SHEET 2

DATE: JULY 2015
SHEET: 212 OF 335
DRAWING: A-23

REQUEST FOR PROPOSAL

PLOT DATE: 7/24/2015 4:33 PM BY: TBOCAS

XREFs= ..\Tblock\44238-004-BP3-TB,.\Arch Details\A-SD-02-ROOF DRAIN,.\Arch Details\0753411R,.\Arch Details\A-SD-03-OVERFLOW,.\Arch Details\0750006R,.\Arch Details\A-SD-07 Stucco Revsd,.\Arch Details\SD-A-R1-CURB FLASHING,.\Arch Details\A-SD-24-Ceiling Details,.\Arch Details\A-SD-23-Ceiling-Bulkheads,.\Arch Details\A-SD-08 Column Detail,..\Base-BP3\A-BP3-Admin-Section-A,.\Arch Details\SD-A-R1Be-Fitdt-R4238-004\Drawings\design build package\volume c - wtp rehab\Bid Package 3 - WTP Rehab\Arch\44238-004BP3-A23 Saved by tbocas Save date = 5/18/2015 11:08 AM

PARTITION TYPES (NOTE: SEE DRAWING A-26 FOR FIRESTOPPING DETAILS)

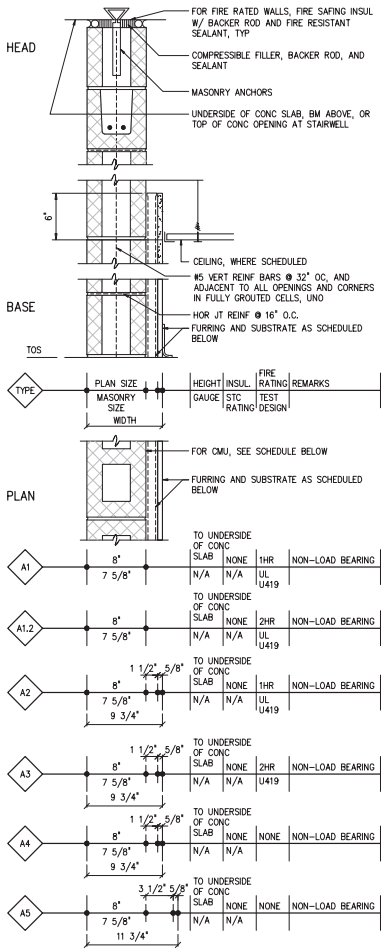

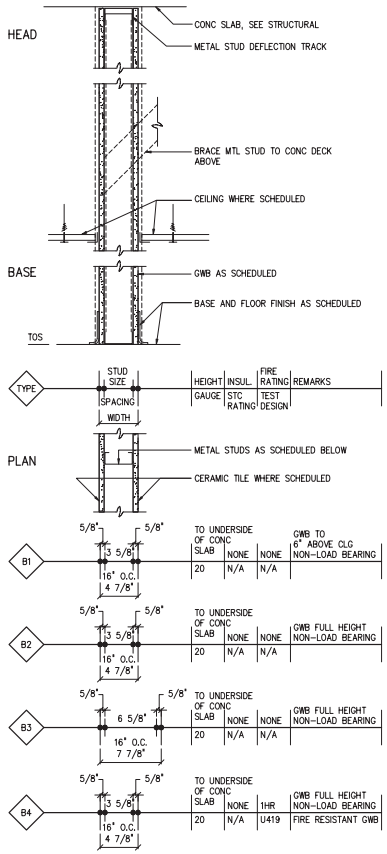

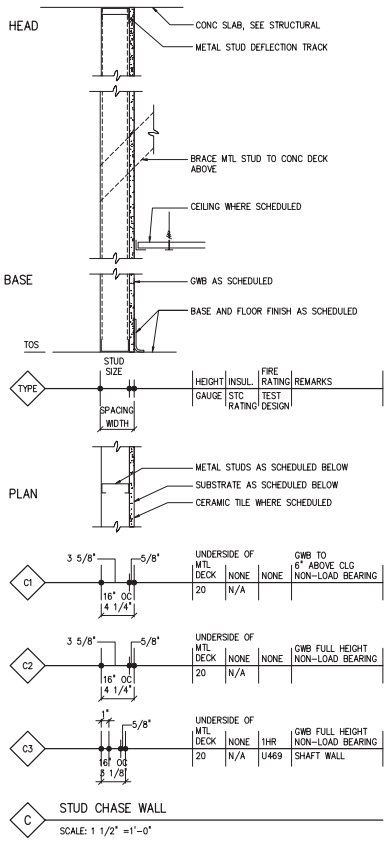

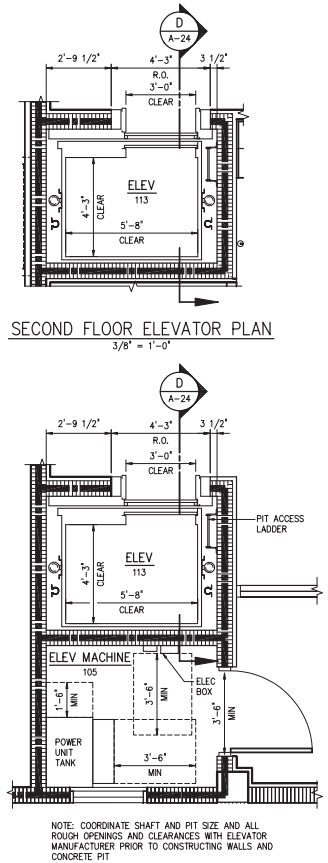

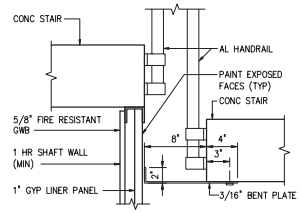

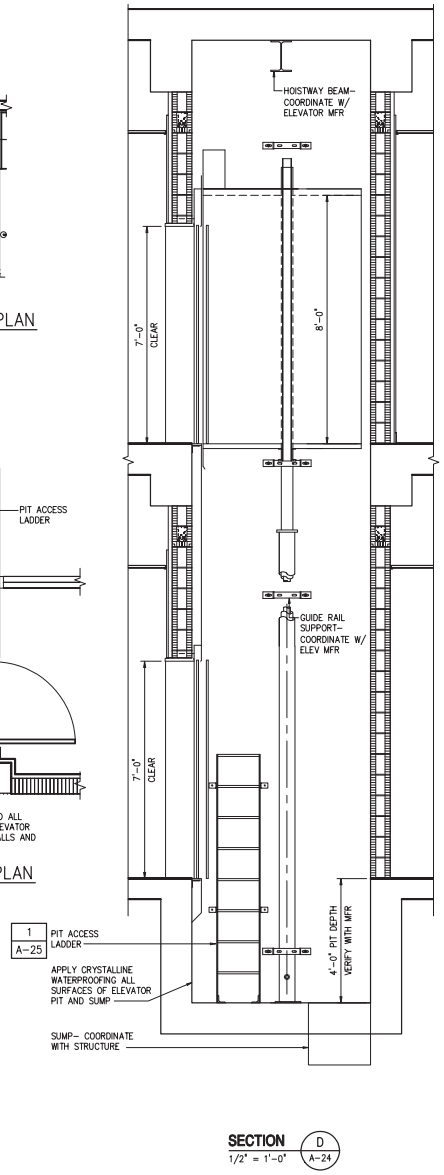

NO.	DATE	ISSUED FOR	BY
1	07/24/15	REQUEST FOR PROPOSAL	G.A.B.

DESIGNED W.H.R.
DRAWN A.L.B.
CHECKED W.H.R.
PROJ. ENGR. G.A.B.

DEAN AVERY WALDROP R.A.
No. 93380

HAZEN AND SAWYER
Environmental Engineers & Scientists
4000 Hollywood Boulevard, Suite 750N
Hollywood, Florida 33021
Certificate of Authorization Number: 2771

SCALE –

CLIENTS PROJECT: –
ENGINEERS PROJECT: 44238-004
CAD REFERENCE: 44238-004BP3-A24

NORTH MIAMI FLORIDA
CITY OF NORTH MIAMI
PUBLIC WORKS UTILITIES

WINSON WATER TREATMENT PLANT
RELIABILITY IMPROVEMENTS – VOLUME C: WTP REHAB

STANDARD ARCHITECTURAL DETAILS SHEET 3

DATE: JULY 2015
SHEET: 213 OF 335
DRAWING: A-24

REQUEST FOR PROPOSAL

PLOT DATE: 7/24/2015 4:33 PM BY: TBOCAS

XREFs= ..\Tblock\44238-004-BP3-TB,..\Base-BP3\A-BP3-Admin-Section-D,..\Base-BP3\A-BP3-Admin-Plan-Bottom,..\Base-BP3\A-BP3-Admin-Plan-Top,..\Arch Details\A-SD-09-Partition-Types,..\Base-BP3\E-BP3-Admin-Plan-Bottom,..\Arch Details\A-SD-04-Stair-Wall

File = H:\44238-004\Drawings\design build package\volume c - wtp rehab\Bid Package 3 - WTP Rehab\Arch\44238-004BP3-A24 Saved by tbocas Save date = 5/18/2015 11:08 AM

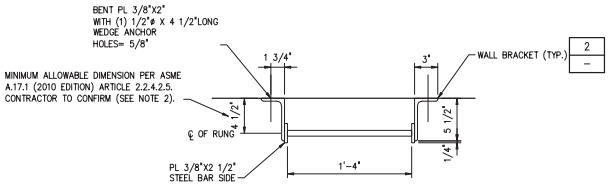

PLAN

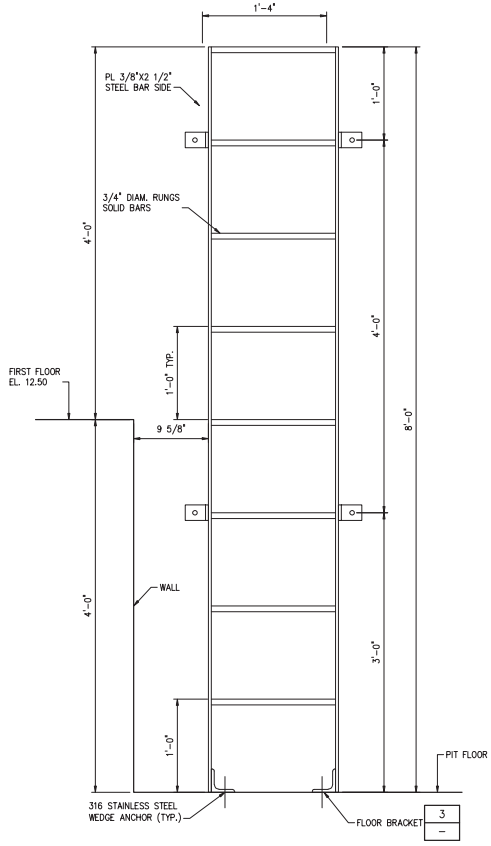

FRONT VIEW

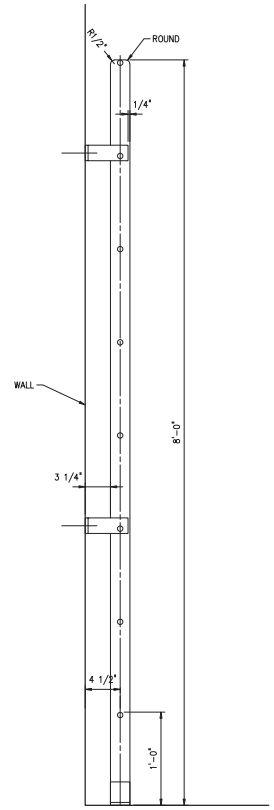

SIDE VIEW

ELEVATOR PIT ACCESS LADDER

DETAIL 1 / A-24

1 1/2"=1'-0"

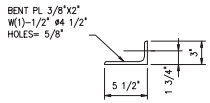

WALL BRACKET

DETAIL 2 / –

NTS

SIDE VIEW

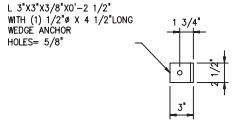

TOP PLAN

FLOOR BRACKET

DETAIL 3 / –

NTS

NOTES:

1. ELEVATOR PIT LADDER SHALL COMPLY WITH ASME A17.1 (LATEST EDITION).
2. PRIOR TO SUBMITTAL OF SHOP DRAWING TO THE ENGINEER, THE CONTRACTOR SHALL MEET WITH AGENCY RESPONSIBLE FOR PERMITTINGS THE ELEVATOR PIT ACCESS LADDER AND CONFIRM THAT THE LADDER PROPOSED FOR CONSTRUCTION MEETS ALL REQUIRMENTS OF THE PERMITTING AGENCY AND ASME A17.1. THE CONTRACTOR SHALL DOCUMENT THE FINDINGS OF THIS WEETING IN WRITTEN MEETING MINUTES AND INCLUDE THE MINUTES WITH THE SHOP DRAWING SUBMITTED TO THE ENGINEER.
3. MATERIAL: 316L STAINLESS STEEL.

REQUEST FOR PROPOSAL

NO.	DATE	ISSUED FOR	BY
1	07/24/15	REQUEST FOR PROPOSAL	G.A.B.

DESIGNED W.H.R.
DRAWN A.L.B.
CHECKED W.H.R.
PROJ. ENGR. G.A.B.

DEAN AVERY WALDROP R.A.
No. 93380

HAZEN AND SAWYER
Environmental Engineers & Scientists
4000 Hollywood Boulevard, Suite 750N
Hollywood, Florida 33021
Certificate of Authorization Number: 2771

SCALE 1 1/2"=1'-0"

CLIENTS PROJECT: –
ENGINEERS PROJECT: 44238-004
CAD REFERENCE: 44238-004BP3-A25

CITY OF NORTH MIAMI
PUBLIC WORKS UTILITIES

WINSON WATER TREATMENT PLANT
RELIABILITY IMPROVEMENTS – VOLUME C: WTP REHAB
STANDARD ARCHITECTURAL DETAILS SHEET 4

DATE: JULY 2015
SHEET: 214 OF 335
DRAWING: A-25

PLOT DATE: 7/24/2015 4:33 PM BY: TBOCAS
XREFs= ..\Tblock\44238-004-BP3-TB
File = H:\44238-004\Drawings\design build package\volume c - wtp rehab\Bid Package 3 - WTP Rehab\Arch\44238-004BP3-A25 Saved by ablaha Save date = 6/6/2014 5:23 PM

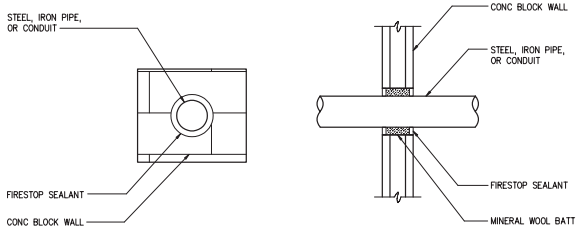

2-HR METALLIC PIPE THROUGH CMU WALL
UL DESIGN C-AJ-1079

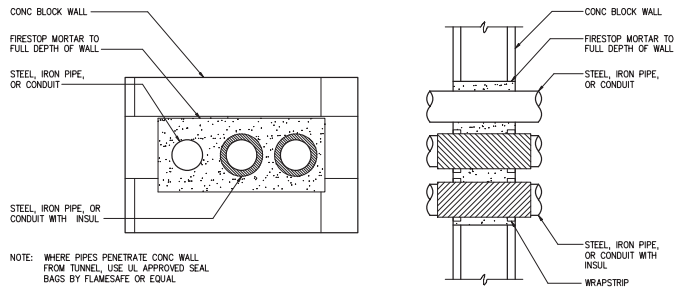

NOTE: WHERE PIPES PENETRATE CONC WALL FROM TUNNEL, USE UL APPROVED SEAL BAGS BY FLAMESAFE OR EQUAL

2-HR MULTIPLE PIPES THROUGH CMU OR CONC WALL
UL DESIGN C-AJ-8033

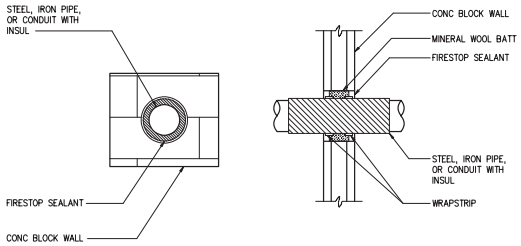

2-HR INSULATED METALLIC PIPE THROUGH CMU WALL UL DESIGN C-AJ-5051 OR C-AJ-5042

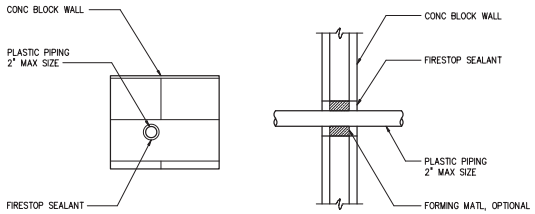

2-HR PLASTIC PIPE THROUGH CMU WALL
UL DESIGN C-AJ-2031

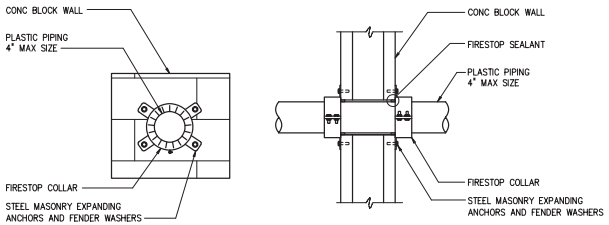

2-HR PLASTIC PIPE THROUGH CMU WALL
UL DESIGN C-AJ-2063

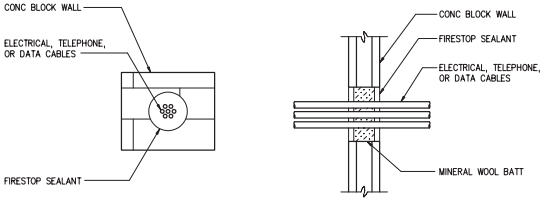

2-HR ELECTRICAL CABLE THROUGH CMU WALL
UL DESIGN C-AJ-3042

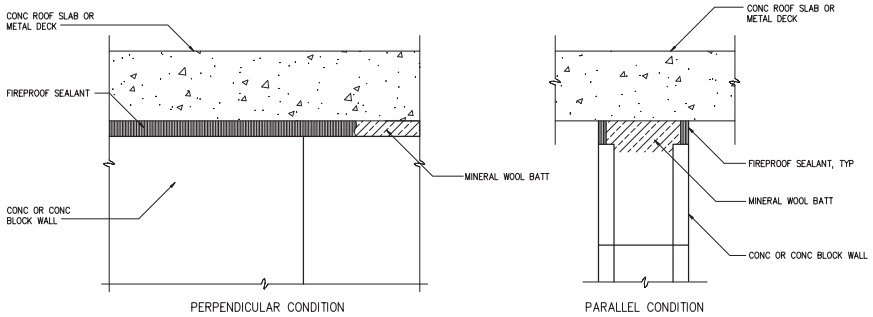

PERPENDICULAR CONDITION

PARALLEL CONDITION

2-HR TOP OF WALL
UL DESIGN HW-D-0027

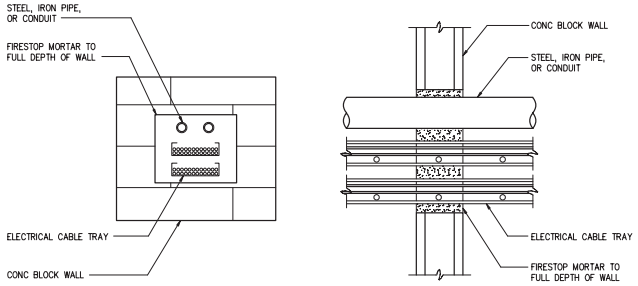

2-HR MULTIPLE PIPE/CABLE TRAY THROUGH CMU WALL
UL DESIGN C-AJ-8016

NO.	DATE	ISSUED FOR	BY
1	07/24/15	REQUEST FOR PROPOSAL	G.A.B.

DESIGNED W.H.R.
DRAWN A.L.B.
CHECKED W.H.R.
PROJ. ENGR. G.A.B.

DEAN AVERY WALDROP R.A.
No. 93380

HAZEN AND SAWYER
Environmental Engineers & Scientists
4000 Hollywood Boulevard, Suite 750N
Hollywood, Florida 33021
Certificate of Authorization Number: 2771

SCALE –

CLIENTS PROJECT: –
ENGINEERS PROJECT: 44238-004
CAD REFERENCE: 44238-004BP3-A26

NORTH MIAMI FLORIDA
CITY OF NORTH MIAMI
PUBLIC WORKS UTILITIES

WINSON WATER TREATMENT PLANT
RELIABILITY IMPROVEMENTS – VOLUME C: WTP REHAB

FIRESTOPPING DETAILS

DATE: JULY 2015
SHEET: 215 OF 335
DRAWING: A-26

REQUEST FOR PROPOSAL

PLOT DATE: 7/24/2015 4:33 PM BY: TBOAS
XREFs= ..\Tblock\44238-004-BP3-TB,..\Arch Details\A-SD-34 Firestopping Details
File = H:\44238-004\Drawings\design build package\volume c - wtp rehab\Bid Package 3 - WTP Rehab\Arch\44238-004BP3-A26 Saved by ablaha Save date = 6/6/2014 5:23 PM

INSTRUMENT AND FUNCTION SYMBOLS

	PRIMARY LOCATION NORMALLY ACCESSIBLE TO OPERATOR	FIELD MOUNTED	AUXILLARY LOCATION NORMALLY ACCESSIBLE TO OPERATOR	NORMALLY INACCESSIBLE OR BEHIND THE PANEL DEVICES OR FUNCTIONS
FIELD/PANEL EQUIPMENT	XXX 000	XXX 000	XXX 000	XXX 000
SHARED DISPLAY, SHARED CONTROL	XXX 000	XXX 000	XXX 000	XXX 000
PROGRAMMABLE LOGIC CONTROLLER	XXX 000 — PLC I/O		PLC LOGIC — XXX 000	
SUPERVISORY COMPUTER FUNCTION (OIT/HMI)	ABC 12345	ABC 12345	ABC 12345	ABC 12345

SINGLE INSTRUMENT OR OTHER DEVICE HAVING MULTIPLE FUNCTIONS OR SHARING A COMMON HOUSING

XXXX YYY SOFTWARE LOGIC OR CONTROL MODULE XXXX AND SUB-MODULE YYY RESIDENT IN DISTRIBUTED CONTROL SYSTEM (DCS) OR PROGRAMMABLE LOGIC CONTROLLER (PLC) REFER TO CONTRACT DOCUMENTS FOR CONTROL AND MODULE DESCRIPTIONS.

ZZZ DESIGNATIONS OF CONTROL FUNCTIONS (ZZZ) ASSOCIATED WITH INSTRUMENT OR OTHER DEVICES.

AHC – AUTO/HOLD/CLOSE
AM – AUTO/MANUAL
DEV – DEVIATION
HOA – HAND/OFF/AUTO
MOA – MANUAL/OFF/AUTO
HOR – HAND/OFF/REMOTE
LOS – LOCKOUT STOP
LR – LOCAL/REMOTE
LOR – LOCAL/OFF/REMOTE
OO – ON/OFF
OC – OPEN/CLOSE
OSC – OPEN/STOP/CLOSED
POT – POTENTIOMETER
RL – RAISE/LOWER
RSL – RAISE/STOP/LOWER
SD – SHUTDOWN
SEL – SELECT
SP – SET POINT
SR – START/RESET
SS – START/STOP

* INSTRUMENT PANEL MOUNTED WITH COMPUTING OR CONVERTING FUNCTION

CONVERT +/-

E – VOLTAGE
I – CURRENT
P – PNEUMATIC
A – ANALOG
B – BINARY
H – HYDRAULIC
O – ELECTROMAGNETIC, SONIC
R – RESISTANCE (ELECT.)
D – DIGITAL

COMPUTE *

Σ SUMMING
△ SUBTRACTOR
X MULTIPLYING
÷ DIVIDING
√ ROOT EXTRACTION
K PROPORTIONAL
d/dt DERIVATIVE
x^n EXPONENTIAL
Σ/n AVERAGING
: RATIO
> HIGH SELECTING
< LOW SELECTING
∫ INTEGRAL
PID PID

XXX 000 PANEL MOUNTED PILOT LIGHT

AIT 000 XXXX ANALYZER, XXXX = TYPE

ALK – ALKALINITY
CL_2 – CHLORINE CONCENTRATION
COMB – COMBUSTIBLE GAS
COND – CONDUCTIVITY
DO – DISSOLVED OXYGEN
H_2S – HYDROGEN SULFIDE
LEL – LOWER EXPLOSIVE LIMIT
O_2 – OXYGEN CONCENTRATION
O_3 – OZONE
ORP – OXIDATION/REDUCTION POTENTIAL
pH – HYDROGEN ION CONCENTRATION
T – TURBIDITY
TH – TOTAL HARDNESS
UV – ULTRAVIOLET

* ASTERISK IDENTIFIES FIELD INSTRUMENTS OR PANELS FURNISHED UNDER SPECIFICATIONS OTHER THAN DIVISION 17.

* OPERATIONAL INTERLOCK

! COMPLEX INTERLOCK
= 1, 2, 3, etc. INTERLOCK NUMBER DESCRIPTION ON ON SAME SHEET
AND AND LOGIC
OR OR LOGIC

VALVE AND ACTUATOR SYMBOLS

GENERIC VALVE
PLUG VALVE
GLOBE VALVE
BALL VALVE
BALL VALVE (3-WAY)
3-WAY VALVE (GENERAL)
PINCH VALVE
COMBINATION VACUUM AND PRESSURE RELIEF VALVE
BUTTERFLY VALVE
CHECK VALVE
BALL CHECK VALVE
DIAPHRAGM VALVE
NEEDLE VALVE
ANGLE VALVE
ROTARY VALVE
THROUGH PLUG VALVE
PRESSURE RELEIF OR SAFETY VALVE
VACUUM RELIEF VALVE
PRESSURE-REDUCING REGULATOR
BACKPRESSURE REGULATOR
BACKFLOW PREVENTER
SLUICE GATE
STOP/SLIDE GATE
STRAINER
AIR RELIEF VALVE
ELECTRIC ACTUATOR
SOLENOID ACTUATOR
PNEUMATIC ACTUATOR
ELECTROPNEUMATIC ACTUATOR
ELECTROHYDRAULIC ACTUATOR
HAND WHEEL

INSTRUMENT SYMBOLS

MAGNETIC FLOW METER
VENTURI FLOW TUBE
TURBINE FLOW METER
ROTAMETER
ULTRASONIC FLOW METER
PADDLE WHEEL FLOW METER
VORTEX FLOW METER
POSITIVE DISPLACEMENT FLOW METER
PITOT TUBE
PARSHALL FLUME
WEIR
ORIFICE PLATE
STRAIGHTENING VANES
ULTRASONIC LEVEL SENSOR
SUBMERSIBLE LEVEL SENSOR
FLOAT TYPE LEVEL SWITCH
TAPPED RING SEAL
DIAPHRAGM SEAL
FULL LINE RING SEAL
VALVED TAP
RTD AND THERMOWELL
RADAR LEVEL SENSOR (UNGUIDED)
RADAR LEVEL SENSOR (GUIDED)
CAPACITANCE LEVEL SENSOR

NOTES:

1. LIGHT LINES AND SYMBOLS INDICATE EXISTING ITEMS (OR FUTURE ITEMS WHERE NOTED). DARK LINES AND SYMBOLS INDICATE PROPOSED ITEMS.

2. SYMBOLS AND NOMENCLATURE ARE BASED ON ISA STANDARDS S5.1, S5.2, AND S5.4. SEE ASSOCIATED ELECTRICAL AND MECHANICAL SYMBOL SHEETS FOR ADDITIONAL SYMBOLS AND ABBREVIATIONS.

PUMP AND EQUIPMENT SYMBOLS

CENTRIFUGAL PUMP
CENTRIFUGAL WET PIT PUMP (SUBMERSIBLE)
BLOWER (CENTRIFUGAL)
GEAR PUMP OR BLOWER (POSITIVE DISPLACEMENT)
PROGRESSIVE CAVITY PUMP
SCREW PUMP
PISTON PUMP
DIAPHRAGM PUMP
VERTICAL PUMP
SUBMERSIBLE VERTICAL PUMP
CHEMICAL FEED PUMP
COMPRESSOR
MIXER
TURBINE

MISCELLANEOUS SYMBOLS

I-XXX DRAWING REFERENCE
XXX_YYYY LOOP/CONTROL STRATEGY TAG
XXX_YYYY EQUIPMENT TAG
PLC OR DCS ANALOG INPUT
PLC OR DCS ANALOG OUTPUT
PLC OR DCS DISCRETE INPUT
PLC OR DCS DISCRETE OUTPUT
M MOTOR
V VENT
D DRAIN
FILTER
AIR FILTER
STATIC MIXER
INJECTOR
PULSATION DAMPENER
CALIBRATION CYLINDER
HORN
HORN/STROBE
RUPTURE DISK
REDUCER
PIPE MATERIAL CHANGE
QUICK CONNECT
BLIND FLANGE
EXPANSION TANK

INSTRUMENT/DEVICE IDENTIFICATION LETTERS

	FIRST-LETTER		SUCCEEDING-LETTERS		
	MEASURED OR INITIATING VARIABLE	MODIFIER	READOUT OR PASSIVE FUNCTION	OUTPUT FUNCTION	MODIFIER
A	ANALYSIS		ALARM		
B	BURNER, COMBUSTION				
C				CONTROL	CLOSE/CLOSED
D		DIFFERENTIAL			
E	VOLTAGE		SENSOR (PRIMARY ELEMENT)		
F	FLOW RATE	RATIO (FRACTION)			
G	GAUGE		GLASS, VIEWING DEVICE		
H	HAND				HIGH
I	CURRENT (ELECTRICAL)		INDICATE		
J	POWER	SCAN			
K	TIME, TIME SCHEDULE	TIME RATE OF CHANGE		CONTROL STATION	
L	LEVEL		LIGHT		LOW
M		MOMENTARY			MIDDLE, INTERMEDIATE
N	TORQUE				
O			ORIFICE, RESTRICTION		OPEN/OPENED
P	PRESSURE, VACUUM		POINT (TEST) CONNECTION		
Q	QUANTITY	INTEGRATE, TOTALIZE			
R	RUN		RECORD & STORE	REPORT	
S	SPEED, FREQUENCY	SAFETY		SWITCH	
T	TEMPERATURE			TRANSMIT	
U	MULTIVARIABLE		MULTIFUNCTION	MULTIFUNCTION	MULTIFUNCTION
V	VIBRATION, VOLUME MECHANICAL ANALYSIS			VALVE, DAMPER, LOUVER	
W	WEIGHT, FORCE		WELL		
X	FAILURE OR TROUBLE	X AXIS			
Y	EVENT, STATE OR PRESENCE	Y AXIS		COMPUTE, CONVERT, RELAY	
Z	POSITION, DIMENSION	Z AXIS		DRIVER, ACTUATOR, FINAL CONTROL ELEMENT	

LINETYPE LEGEND

MAJOR PROCESS PIPES OR CHANNELS
SECONDARY PROCESS OR MECHANICAL CONNECTIONS
CAPILLARY OR IMPULSE TUBING
AIR SUPPLY OR SIGNAL
HYDRAULIC SUPPLY OR SIGNAL
ELECTRICAL SIGNAL
CATEGORY 6 CABLE
FIBER OPTIC CABLE
DATA LINK OR INTERNAL SOFTWARE LINK

SAMPLE LOOP DIAGRAM ISA EXPANDED FORMAT

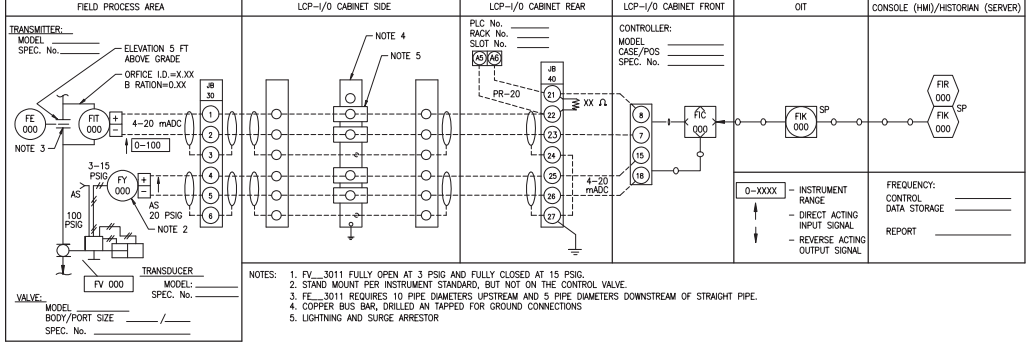

NOTES:
1. FV__3011 FULLY OPEN AT 3 PSIG AND FULLY CLOSED AT 15 PSIG.
2. STAND MOUNT PER INSTRUMENT STANDARD, BUT NOT ON THE CONTROL VALVE.
3. FE__3011 REQUIRES 10 PIPE DIAMETERS UPSTREAM AND 5 PIPE DIAMETERS DOWNSTREAM OF STRAIGHT PIPE.
4. COPPER BUS BAR, DRILLED AN TAPPED FOR GROUND CONNECTIONS
5. LIGHTNING AND SURGE ARRESTOR

NO.	DATE	ISSUED FOR	BY
1	07/24/15	REQUEST FOR PROPOSAL	G.A.B.

DESIGNED L.P.A.
DRAWN R.D.A.
CHECKED G.A.B.
PROJ. ENGR. G.A.B.

LUIS P. AMARAL P.E.
No. 47573

HAZEN AND SAWYER
Environmental Engineers & Scientists
4000 Hollywood Boulevard, Suite 750N
Hollywood, Florida 33021
Certificate of Authorization Number: 2771

SCALE N/A

CLIENTS PROJECT: –
ENGINEERS PROJECT: 44238-004
CAD REFERENCE: 44238-004BP3-I01

NORTH MIAMI FLORIDA
CITY OF NORTH MIAMI
PUBLIC WORKS UTILITIES

WINSON WATER TREATMENT PLANT
RELIABILITY IMPROVEMENTS – VOLUME C: WTP REHAB

SYMBOLS AND LEGEND

DATE: JULY 2015
SHEET: 216 OF 335
DRAWING: I-1

REQUEST FOR PROPOSAL

PLOT DATE: 7/24/2015 4:33 PM BY: TBOCAS
XREFs= ..\,..\,..\Tblock\44238-004-BP3-TB
File = H:\44238-004\Drawings\design build package\volume c - wtp rehab\Bid Package 3 - WTP Rehab\Instrumentation\Bid Package 3 - WTP Rehab\PID DWG\44238-004BP3-I01 Saved by lamaral Save date = 6/6/2014 5:39 PM

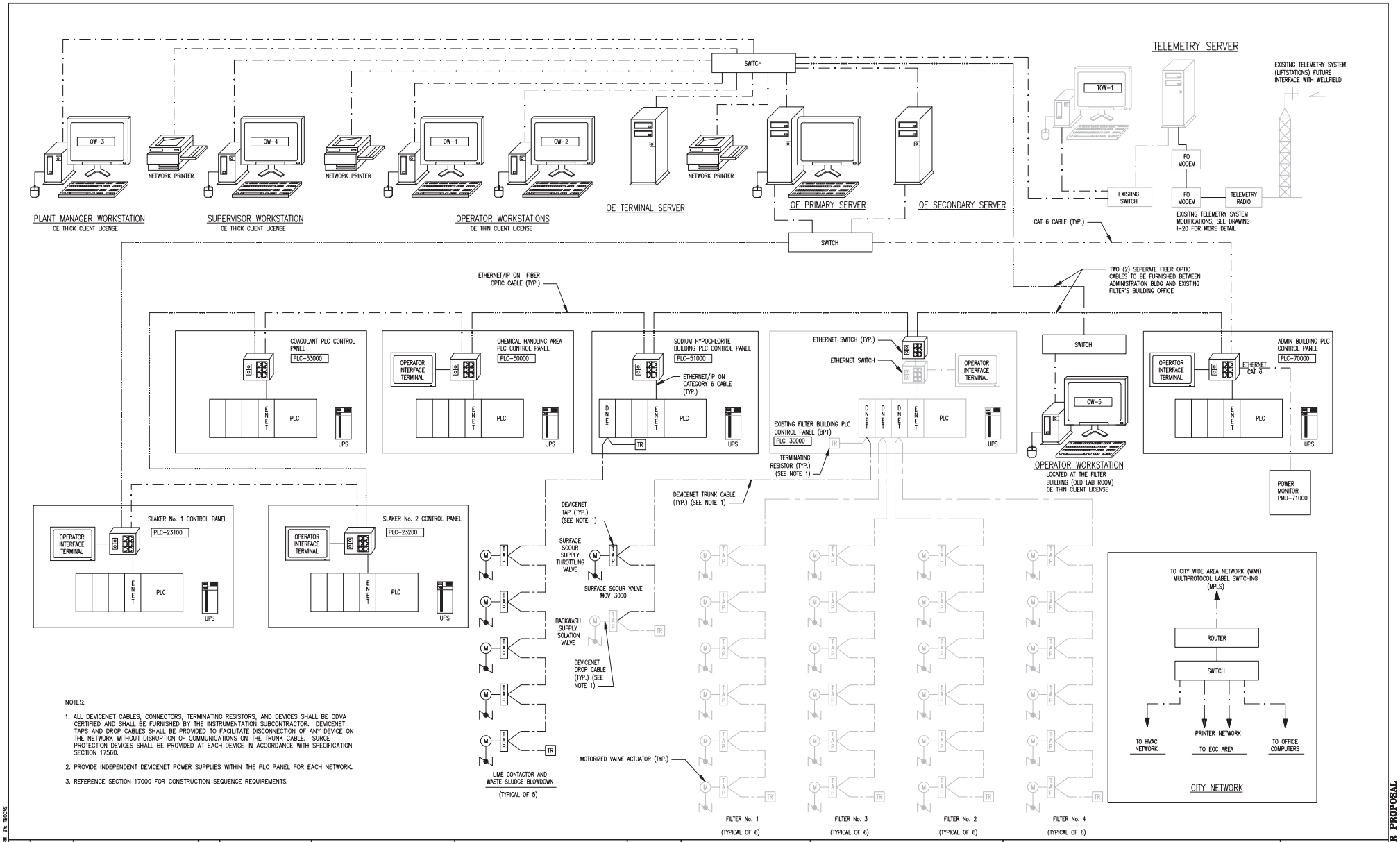

NOTES:

1. ALL DEVICENET CABLES, CONNECTORS, TERMINATING RESISTORS, AND DEVICES SHALL BE ODVA CERTIFIED AND SHALL BE FURNISHED BY THE INSTRUMENTATION SUBCONTRACTOR. DEVICENET TAPS AND DROP CABLES SHALL BE PROVIDED TO FACILITATE DISCONNECTION OF ANY DEVICE ON THE NETWORK WITHOUT DISRUPTION OF COMMUNICATIONS ON THE TRUNK CABLE. SURGE PROTECTION DEVICES SHALL BE PROVIDED AT EACH DEVICE IN ACCORDANCE WITH SPECIFICATION SECTION 17560.
2. PROVIDE INDEPENDENT DEVICENET POWER SUPPLIES WITHIN THE PLC PANEL FOR EACH NETWORK.
3. REFERENCE SECTION 17000 FOR CONSTRUCTION SEQUENCE REQUIREMENTS.

NO.	DATE	ISSUED FOR	BY
1	07/24/15	REQUEST FOR PROPOSAL	G.A.B.

DESIGNED L.P.A.
DRAWN R.D.A.
CHECKED G.A.B.
PROJ. ENGR. G.A.B.

LUIS P. AMARAL P.E.
No. 47573

HAZEN AND SAWYER
Environmental Engineers & Scientists
4000 Hollywood Boulevard, Suite 750N
Hollywood, Florida 33021
Certificate of Authorization Number: 2771

SCALE N/A

CLIENTS PROJECT: –
ENGINEERS PROJECT: 44238-004
CAD REFERENCE: 44238-004BP3-I02

CITY OF NORTH MIAMI
PUBLIC WORKS UTILITIES

WINSON WATER TREATMENT PLANT
RELIABILITY IMPROVEMENTS – VOLUME C: WTP REHAB

SYSTEM BLOCK DIAGRAM

DATE: JULY 2015
SHEET: 217 OF 335
DRAWING: I-2

REQUEST FOR PROPOSAL

PLOT DATE: 7/24/2015 4:33 PM BY: TBOCAS

XREFs= ..\,\,\,\tblock\44238-004-BP3-TB

File = H:\44238-004\Drawings\design build package\volume c - wtp rehab\Bid Package 3 - WTP Rehab\Instrumentation\Bid Package 3 - WTP Rehab\PID DWG\44238-004BP3-I02 Saved by tbocas Save date = 5/21/2015 9:32 AM

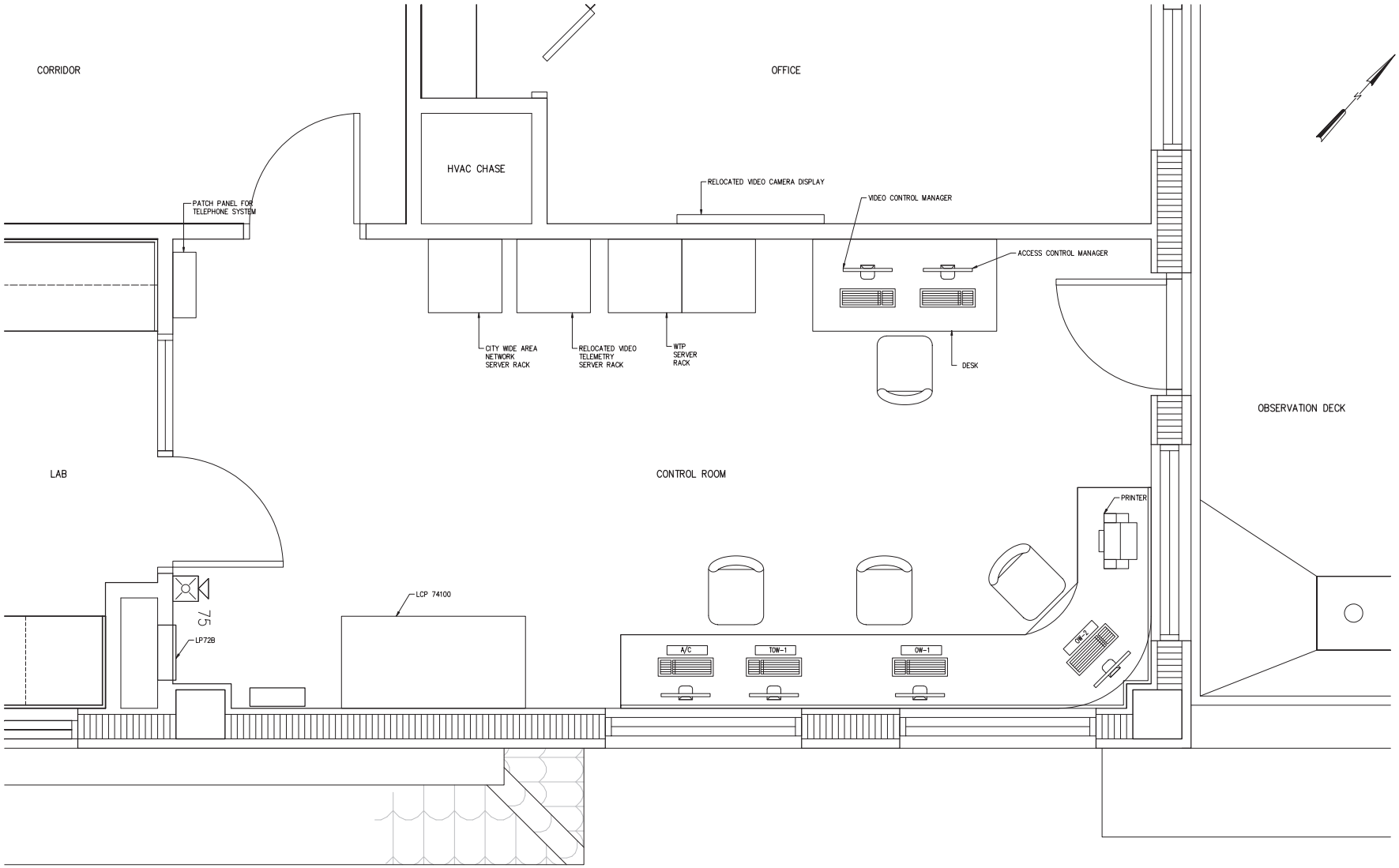

3/4"=1'-0"

6" 0 1 2'

NO.	DATE	ISSUED FOR	BY
1	07/24/15	REQUEST FOR PROPOSAL	G.A.B.

DESIGNED L.P.A.
DRAWN R.D.A.
CHECKED G.A.B.
PROJ. ENGR. G.A.B.

LUIS P. AMARAL P.E.
No. 47573

HAZEN AND SAWYER
Environmental Engineers & Scientists
4000 Hollywood Boulevard, Suite 750N
Hollywood, Florida 33021
Certificate of Authorization Number: 2771

SCALE 3/4"=1'-0"

CLIENTS PROJECT: –
ENGINEERS PROJECT: 44238-004
CAD REFERENCE: 44238-004BP3-I03

NORTH MIAMI FLORIDA
CITY OF NORTH MIAMI
PUBLIC WORKS UTILITIES

WINSON WATER TREATMENT PLANT
RELIABILITY IMPROVEMENTS – VOLUME C: WTP REHAB

NEW ADMINISTRATION BUILDING
CONTROL ROOM LAYOUT

DATE: JULY 2015
SHEET: 218 OF 335
DRAWING: I-3

REQUEST FOR PROPOSAL

PLOT DATE: 7/24/2015 4:34 PM BY: TBOCAS

XREFs= ..\,\,\,\Tblock\44238-004-BP3-TB,..\,\,\,\Base-BP3\A-BP3-Admin-Plan-Top,..\,\,\Base-BP3\A-BP3-Admin-Plan-Col-Grid,..\,\,\,\Base-BP3\P-BP3-Admin-Plan-Top

File = H:\44238-004\Drawings\design build package\volume c - wtp rehab\Bid Package 3 - WTP Rehab\Instrumentation\Bid Package 3 - WTP Rehab\PID DWG\44238-004BP3-I03 Saved by tbocas Save date = 5/18/2015 11:17 AM

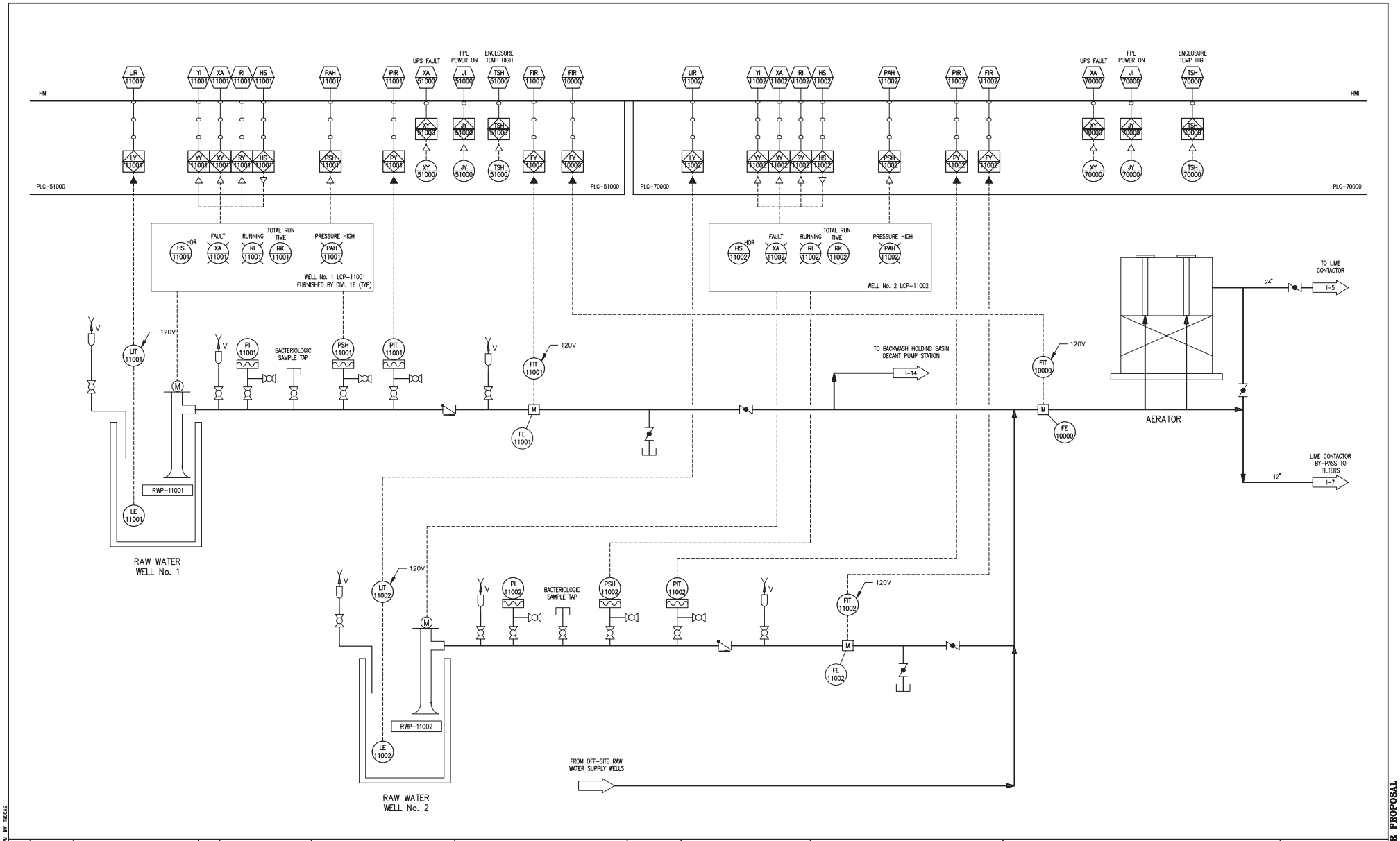

NO.	DATE	ISSUED FOR	BY
1	07/24/15	REQUEST FOR PROPOSAL	G.A.B.

DESIGNED L.P.A.
DRAWN R.D.A.
CHECKED G.A.B.
PROJ. ENGR. G.A.B.

LUIS P. AMARAL P.E.
No. 47573

HAZEN AND SAWYER
Environmental Engineers & Scientists
4000 Hollywood Boulevard, Suite 750N
Hollywood, Florida 33021
Certificate of Authorization Number: 2771

SCALE N/A

CLIENTS PROJECT: –
ENGINEERS PROJECT: 44238-004
CAD REFERENCE: 44238-004BP3-I04

NORTH MIAMI FLORIDA
CITY OF NORTH MIAMI
PUBLIC WORKS UTILITIES

WINSON WATER TREATMENT PLANT
RELIABILITY IMPROVEMENTS – VOLUME C: WTP REHAB
ON-SITE PRODUCTION WELLS AND AERATOR

DATE: JULY 2015
SHEET: 219 OF 335
DRAWING: I-4

REQUEST FOR PROPOSAL

PLOT DATE: 7/24/2015 4:34 PM BY: TBOCAS
XREFs= ..\,\,\Tblock\44238-004-BP3-TB
File = H:\44238-004\Drawings\design build package\volume c - wtp rehab\Bid Package 3 - WTP Rehab\Instrumentation\Bid Package 3 - WTP Rehab\PID DWG\44238-004BP3-I04 Saved by lamaral Save date = 6/6/2014 5:39 PM

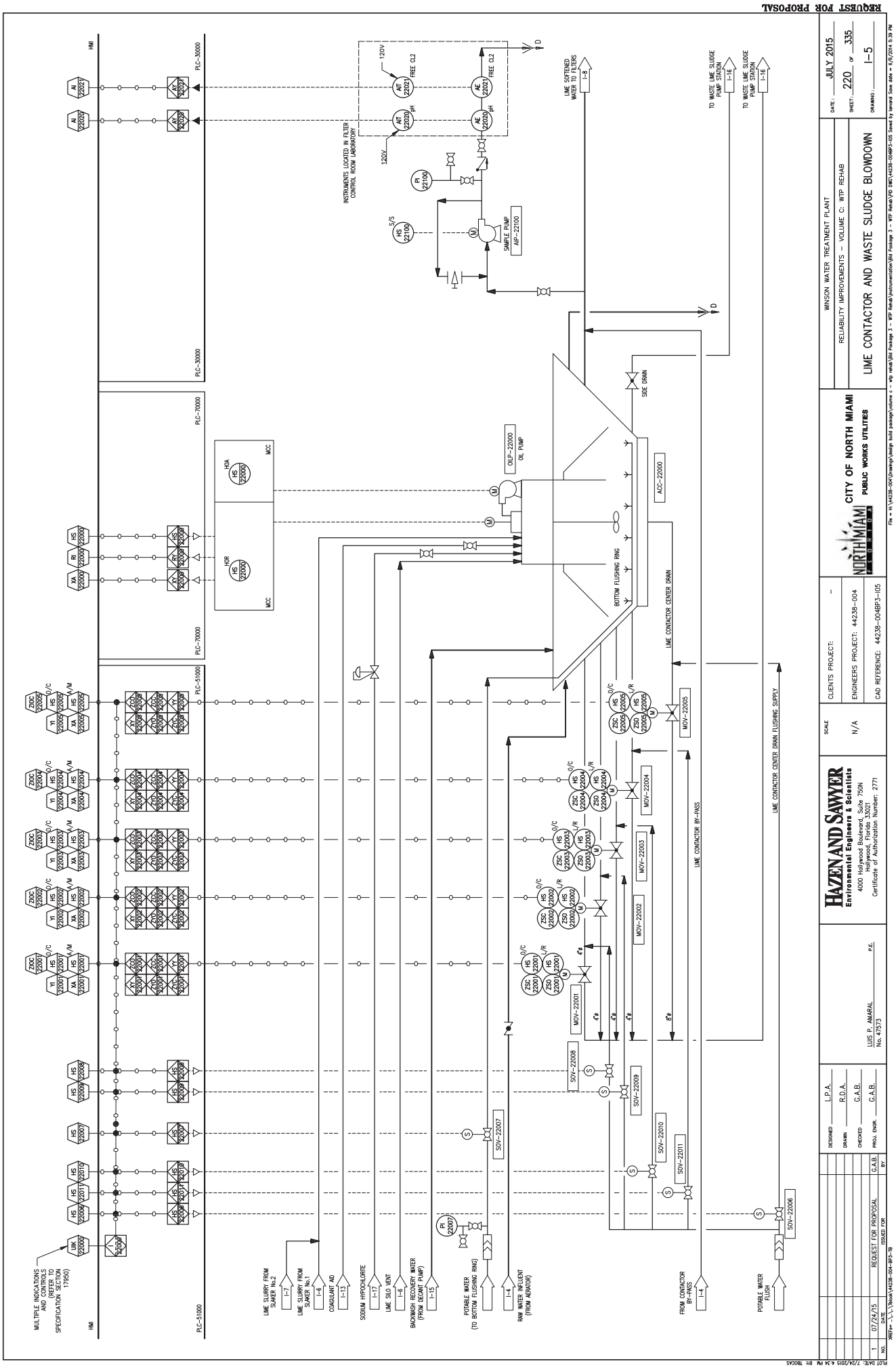
REQUEST FOR PROPOSAL
WINSON WATER TREATMENT PLANT
RELIABILITY IMPROVEMENTS – VOLUME C: WTP REHAB
LIME CONTACTOR AND WASTE SLUDGE BLOWDOWN
DATE: JULY 2015
SHEET: 220 OF 335
DRAWING: I-5
CITY OF NORTH MIAMI
PUBLIC WORKS UTILITIES
NORTH MIAMI
CLIENTS PROJECT: –
ENGINEERS PROJECT: 44238-004
CAD REFERENCE: 44238-004BP3-105
SCALE N/A
HAZEN AND SAWYER
Environmental Engineers & Scientists
4000 Hollywood Boulevard, Suite 750N
Hollywood, Florida 33021
Certificate of Authorization Number: 2771
LUIS P. AMARAL
No. 47573
DESIGNED L.P.A.
DRAWN R.D.A.
CHECKED G.A.B.
PROJ. ENGR. G.A.B.
1 07/24/15 REQUEST FOR PROPOSAL G.A.B.
NO. DATE ISSUED FOR BY
PLOT DATE: 7/24/2015 4:34 PM BY: TBOCAS
MULTIPLE INDICATIONS AND CONTROLS (REFER TO SPECIFICATION SECTION 17950)
LIME SLURRY FROM SLAKER No.2
LIME SLURRY FROM SLAKER No.1
COAGULANT AID
SODIUM HYPOCHLORITE
LIME SILO VENT
BACKWASH RECOVERY WATER (FROM DECANT PUMP)
POTABLE WATER (TO BOTTOM FLUSHING RING)
RAW WATER INFLUENT (FROM AERATOR)
FROM CONTACTOR BY-PASS
POTABLE WATER FLUSH
LIME CONTACTOR CENTER DRAIN FLUSHING SUPPLY
LIME CONTACTOR BY-PASS
LIME CONTACTOR CENTER DRAIN
BOTTOM FLUSHING RING
SIDE DRAIN
OILP-22000 OIL PUMP
ACC-22000
MOV-22001
MOV-22002
MOV-22003
MOV-22004
MOV-22005
SOV-22006
SOV-22007
SOV-22008
SOV-22009
SOV-22010
SOV-22011
SAMPLE PUMP AIP-22100
INSTRUMENTS LOCATED IN FILTER CONTROL ROOM LABORATORY
LIME SOFTENED WATER TO FILTERS I-8
TO WASTE LIME SLUDGE PUMP STATION I-16
TO WASTE LIME SLUDGE PUMP STATION I-16
PLC-30000
PLC-70000
PLC-51000
HMI
MCC
120V
FREE CL2
pH

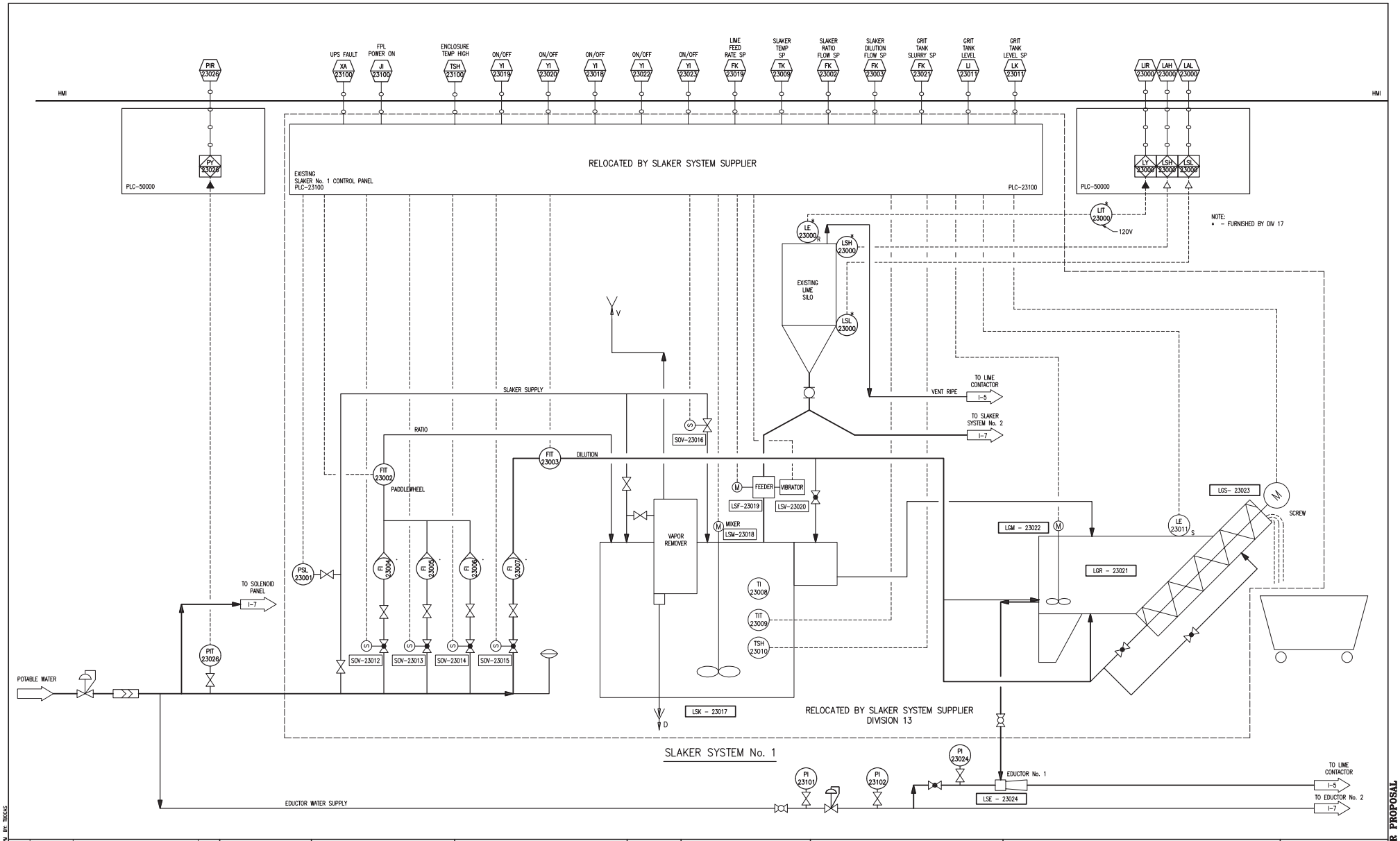

NO.	DATE	ISSUED FOR	BY
1	07/24/15	REQUEST FOR PROPOSAL	G.A.B.

DESIGNED L.P.A.
DRAWN R.D.A.
CHECKED G.A.B.
PROJ. ENGR. G.A.B.

LUIS P. AMARAL P.E.
No. 47573

HAZEN AND SAWYER
Environmental Engineers & Scientists
4000 Hollywood Boulevard, Suite 750N
Hollywood, Florida 33021
Certificate of Authorization Number: 2771

SCALE N/A

CLIENTS PROJECT: –
ENGINEERS PROJECT: 44238-004
CAD REFERENCE: 44238-004BP3-I06

NORTH MIAMI FLORIDA
CITY OF NORTH MIAMI
PUBLIC WORKS UTILITIES

WINSON WATER TREATMENT PLANT
RELIABILITY IMPROVEMENTS – VOLUME C: WTP REHAB

LIME SLAKING SYSTEM NO. 1

DATE: JULY 2015
SHEET: 221 OF 335
DRAWING: I-6

REQUEST FOR PROPOSAL

PLOT DATE: 7/24/2015 4:34 PM BY: TBOCAS
XREFs= ..\,\,\,\Tblock\44238-004-BP3-TB
File = H:\44238-004\Drawings\design build package\volume c - wtp rehab\Bid Package 3 - WTP Rehab\Instrumentation\Bid Package 3 - WTP Rehab\PID DWG\44238-004BP3-I06 Saved by tbocas Save date = 5/18/2015 11:17 AM

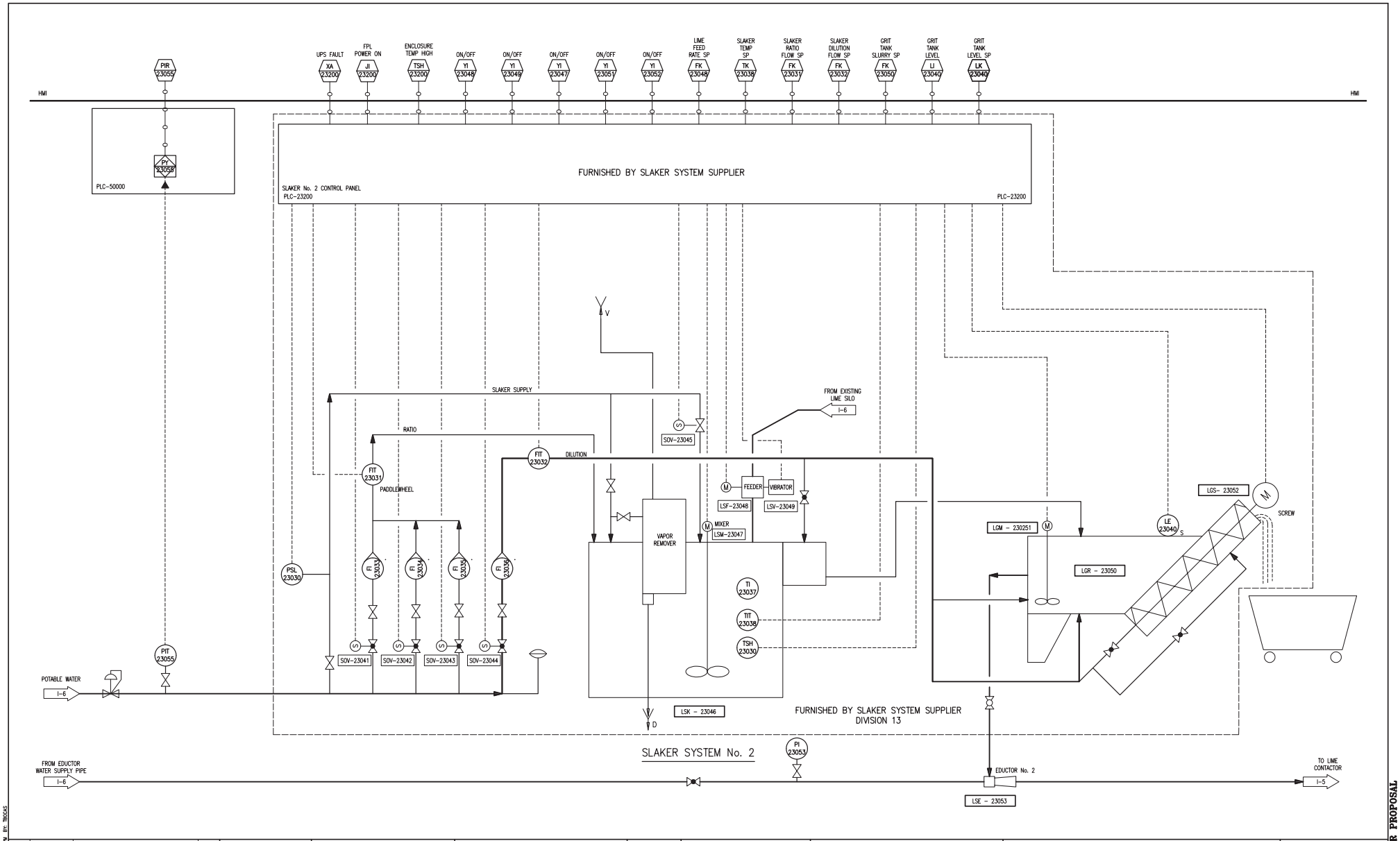

NO.	DATE	ISSUED FOR	BY
1	07/24/15	REQUEST FOR PROPOSAL	G.A.B.

DESIGNED L.P.A.
DRAWN R.D.A.
CHECKED G.A.B.
PROJ. ENGR. G.A.B.

LUIS P. AMARAL P.E.
No. 47573

HAZEN AND SAWYER
Environmental Engineers & Scientists
4000 Hollywood Boulevard, Suite 750N
Hollywood, Florida 33021
Certificate of Authorization Number: 2771

SCALE N/A

CLIENTS PROJECT: –
ENGINEERS PROJECT: 44238-004
CAD REFERENCE: 44238-004BP3-I07

NORTH MIAMI FLORIDA
CITY OF NORTH MIAMI
PUBLIC WORKS UTILITIES

WINSON WATER TREATMENT PLANT
RELIABILITY IMPROVEMENTS – VOLUME C: WTP REHAB

LIME SLAKING SYSTEM NO. 2

DATE: JULY 2015
SHEET: 222 OF 335
DRAWING: I-7

REQUEST FOR PROPOSAL

PLOT DATE: 7/24/2015 4:34 PM BY: TBOCAS

XREFs= ..\,\,\Tblock\44238-004-BP3-TB

File = H:\44238-004\Drawings\design build package\volume c - wtp rehab\Bid Package 3 - WTP Rehab\Instrumentation\Bid Package 3 - WTP Rehab\PID DWG\44238-004BP3-I07 Saved by tbocas Save date = 5/18/2015 11:17 AM

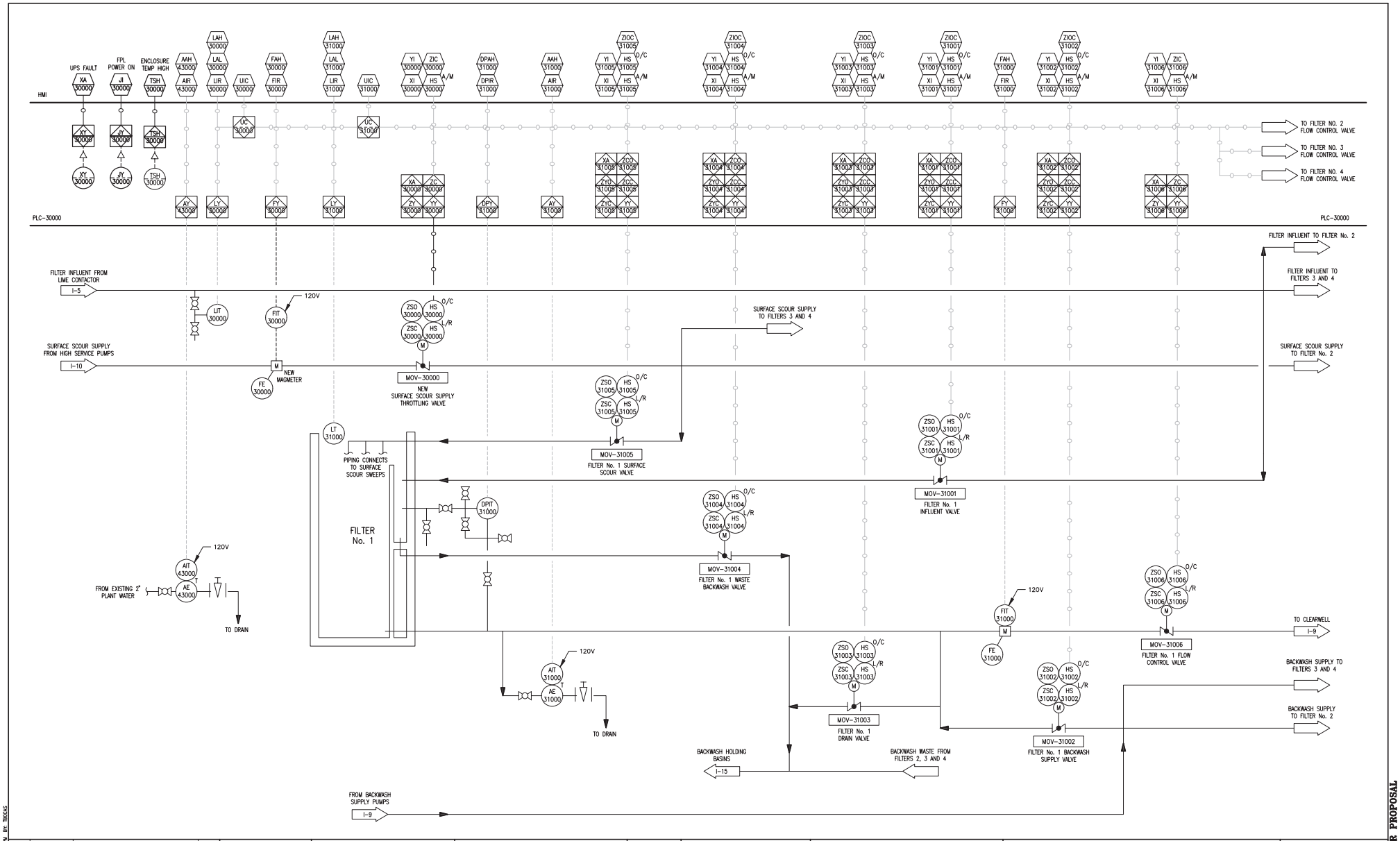

NO.	DATE	ISSUED FOR	BY
1	07/24/15	REQUEST FOR PROPOSAL	G.A.B.

DESIGNED L.P.A.
DRAWN R.D.A.
CHECKED G.A.B.
PROJ. ENGR. G.A.B.

LUIS P. AMARAL P.E.
No. 47573

HAZEN AND SAWYER
Environmental Engineers & Scientists
4000 Hollywood Boulevard, Suite 750N
Hollywood, Florida 33021
Certificate of Authorization Number: 2771

SCALE N/A

CLIENTS PROJECT: –
ENGINEERS PROJECT: 44238-004
CAD REFERENCE: 44238-004BP3-I08

CITY OF NORTH MIAMI
PUBLIC WORKS UTILITIES

WINSON WATER TREATMENT PLANT
RELIABILITY IMPROVEMENTS – VOLUME C: WTP REHAB

FILTERS (FROM BP 1)

DATE: JULY 2015
SHEET: 223 OF 335
DRAWING: I-8

REQUEST FOR PROPOSAL

PLOT DATE: 7/24/2015 4:34 PM BY: TBOCAS
XREFs= ..\,..\,..\Tblock\44238-004-BP3-TB
File = H:\44238-004\Drawings\design build package\volume c - wtp rehab\Bid Package 3 - WTP Rehab\Instrumentation\Bid Package 3 - WTP Rehab\PID DWG\44238-004BP3-I08 Saved by lamaral Save date = 6/8/2014 5:39 PM

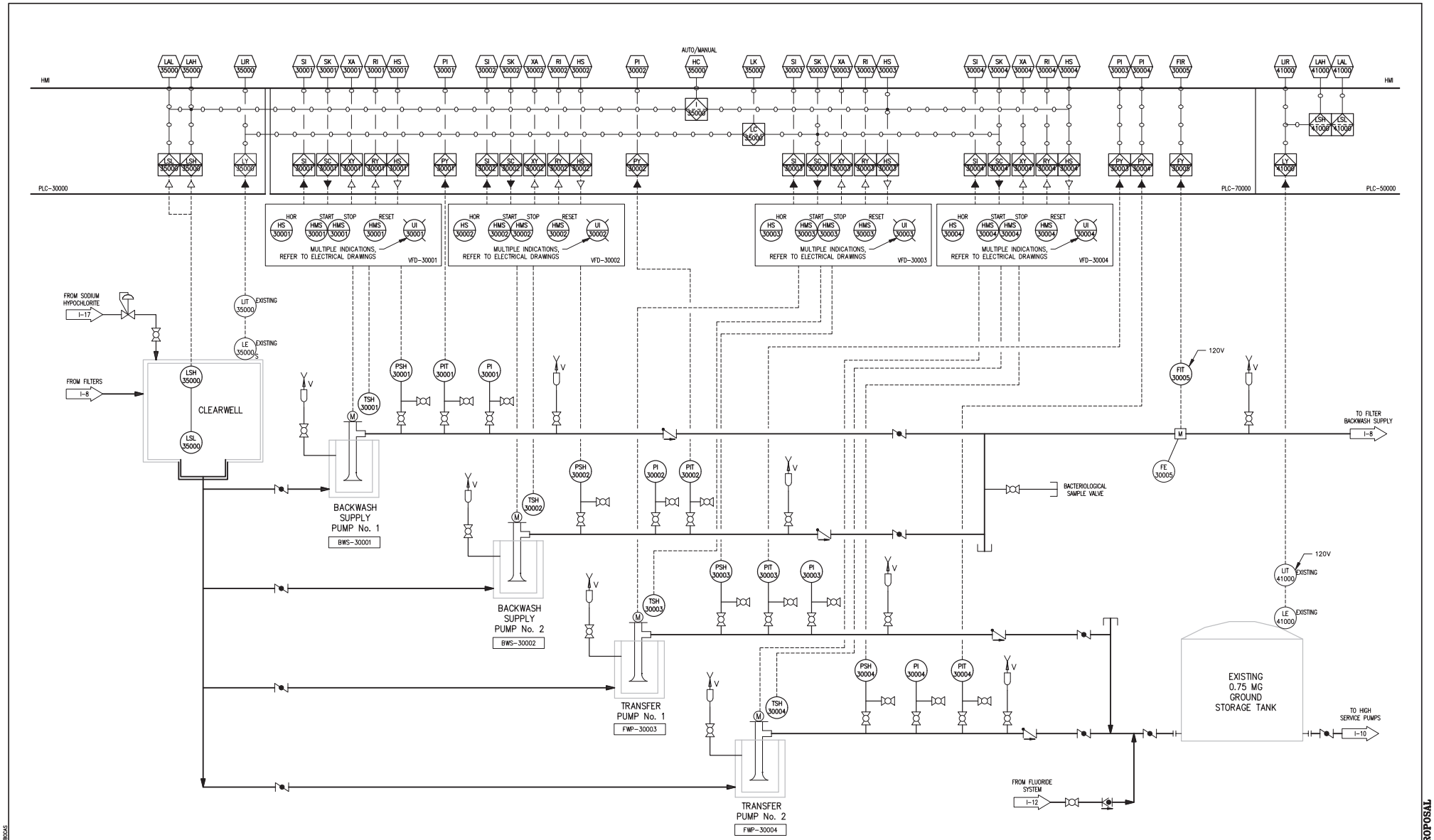

NO.	DATE	ISSUED FOR	BY
1	07/24/15	REQUEST FOR PROPOSAL	G.A.B.

DESIGNED L.P.A.
DRAWN R.D.A.
CHECKED G.A.B.
PROJ. ENGR. G.A.B.

LUIS P. AMARAL P.E.
No. 47573

HAZEN AND SAWYER
Environmental Engineers & Scientists
4000 Hollywood Boulevard, Suite 750N
Hollywood, Florida 33021
Certificate of Authorization Number: 2771

SCALE N/A

CLIENTS PROJECT: –
ENGINEERS PROJECT: 44238-004
CAD REFERENCE: 44238-004BP3-I09

NORTH MIAMI FLORIDA
CITY OF NORTH MIAMI
PUBLIC WORKS UTILITIES

WINSON WATER TREATMENT PLANT
RELIABILITY IMPROVEMENTS – VOLUME C: WTP REHAB
MASTER PUMP STATION BACKWASH AND TRANSFER PUMPS

DATE: JULY 2015
SHEET: 224 OF 335
DRAWING: I-9

REQUEST FOR PROPOSAL

PLOT DATE: 7/24/2015 4:34 PM BY: TBOAS
XREFs= ..\,\,\Tblock\44238-004-BP3-TB
File = H:\44238-004\Drawings\design build package\volume c - wtp rehab\Bid Package 3 - WTP Rehab\Instrumentation\Bid Package 3 - WTP Rehab\PID DWG\44238-004BP3-I09 Saved by lamaral Save date = 6/6/2014 5:39 PM

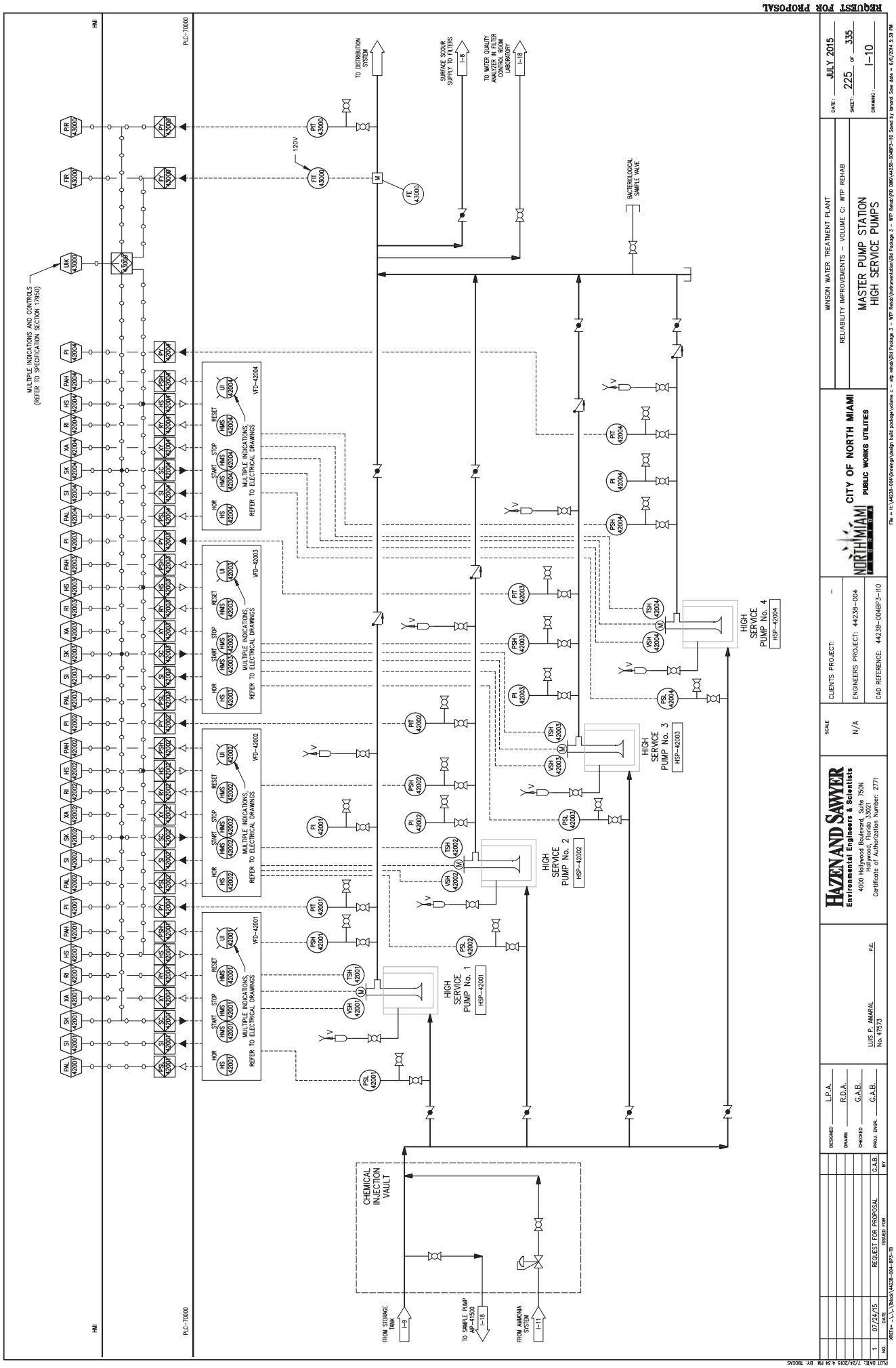
REQUEST FOR PROPOSAL
HIGH SERVICE PUMP No. 1
HSP-42001
HIGH SERVICE PUMP No. 2
HSP-42002
HIGH SERVICE PUMP No. 3
HSP-42003
HIGH SERVICE PUMP No. 4
HSP-42004
CHEMICAL INJECTION VAULT
MULTIPLE INDICATIONS AND CONTROLS (REFER TO SPECIFICATION SECTION 17950)
MULTIPLE INDICATIONS, REFER TO ELECTRICAL DRAWINGS
VFD-42001
VFD-42002
VFD-42003
VFD-42004
TO DISTRIBUTION SYSTEM
SURFACE SCOUR SUPPLY TO FILTERS
TO WATER QUALITY ANALYZER IN FILTER CONTROL ROOM LABORATORY
BACTEROLOGICAL SAMPLE VALVE
FROM STORAGE TANK
TO SAMPLE PUMP AP-41500
FROM AMMONIA SYSTEM
PLC-70000
HMI
WINSON WATER TREATMENT PLANT
RELIABILITY IMPROVEMENTS – VOLUME C: WTP REHAB
MASTER PUMP STATION
HIGH SERVICE PUMPS
CITY OF NORTH MIAMI
PUBLIC WORKS UTILITIES
NORTH MIAMI
CLIENTS PROJECT: –
ENGINEERS PROJECT: 44238-004
CAD REFERENCE: 44238-004BP3-I10
SCALE N/A
HAZEN AND SAWYER
Environmental Engineers & Scientists
4000 Hollywood Boulevard, Suite 750N
Hollywood, Florida 33021
Certificate of Authorization Number: 2771
LUIS P. AMARAL
No. 47573
DESIGNED L.P.A.
DRAWN R.D.A.
CHECKED G.A.B.
PROJ. ENGR. G.A.B.
1 07/24/15 REQUEST FOR PROPOSAL G.A.B.
NO. DATE ISSUED FOR BY
DATE: JULY 2015
SHEET: 225 OF 335
DRAWING: I-10
PLOT DATE: 7/24/2015 4:34 PM BY: TBOCAS

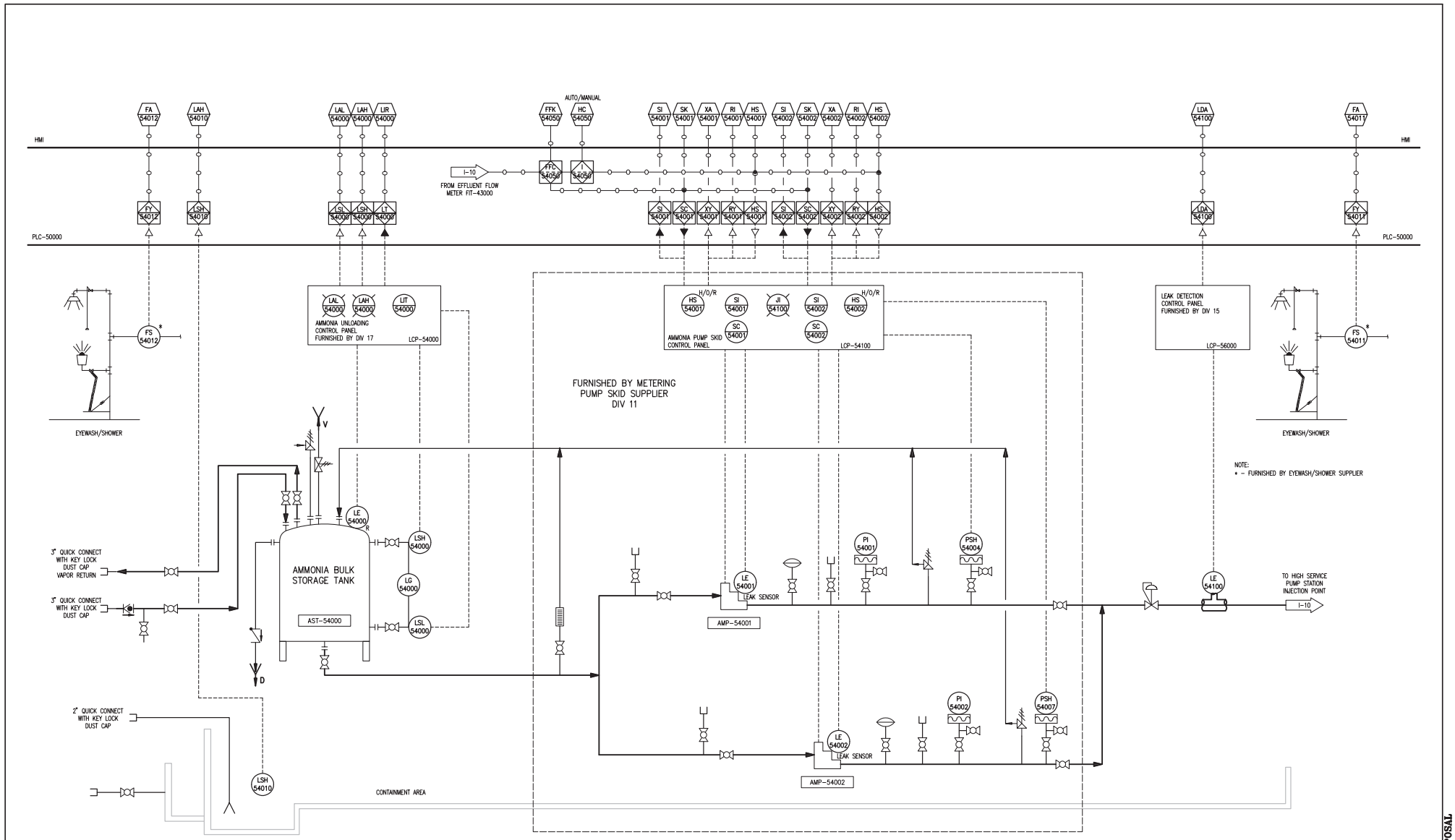

NO.	DATE	ISSUED FOR	BY
1	07/24/15	REQUEST FOR PROPOSAL	G.A.B.

DESIGNED L.P.A.
DRAWN R.D.A.
CHECKED G.A.B.
PROJ. ENGR. G.A.B.

LUIS P. AMARAL P.E.
No. 47573

HAZEN AND SAWYER
Environmental Engineers & Scientists
4000 Hollywood Boulevard, Suite 750N
Hollywood, Florida 33021
Certificate of Authorization Number: 2771

SCALE N/A

CLIENTS PROJECT: –
ENGINEERS PROJECT: 44238-004
CAD REFERENCE: 44238-004BP3-I11

NORTH MIAMI FLORIDA
CITY OF NORTH MIAMI
PUBLIC WORKS UTILITIES

WINSON WATER TREATMENT PLANT
RELIABILITY IMPROVEMENTS – VOLUME C: WTP REHAB
CHEMICAL HANDLING FACILITY AMMONIA FEED SYSTEMS

DATE: JULY 2015
SHEET: 226 OF 335
DRAWING: I-11

REQUEST FOR PROPOSAL

PLOT DATE: 7/24/2015 4:34 PM BY: TBOCAS
XREFs= ..\,\,\Tblock\44238-004-BP3-TB
File = H:\44238-004\Drawings\design build package\volume c - wtp rehab\Bid Package 3 - WTP Rehab\instrumentation\Bid Package 3 - WTP Rehab\PID DWG\44238-004BP3-I11 Saved by lamaral Save date = 6/6/2014 5:39 PM

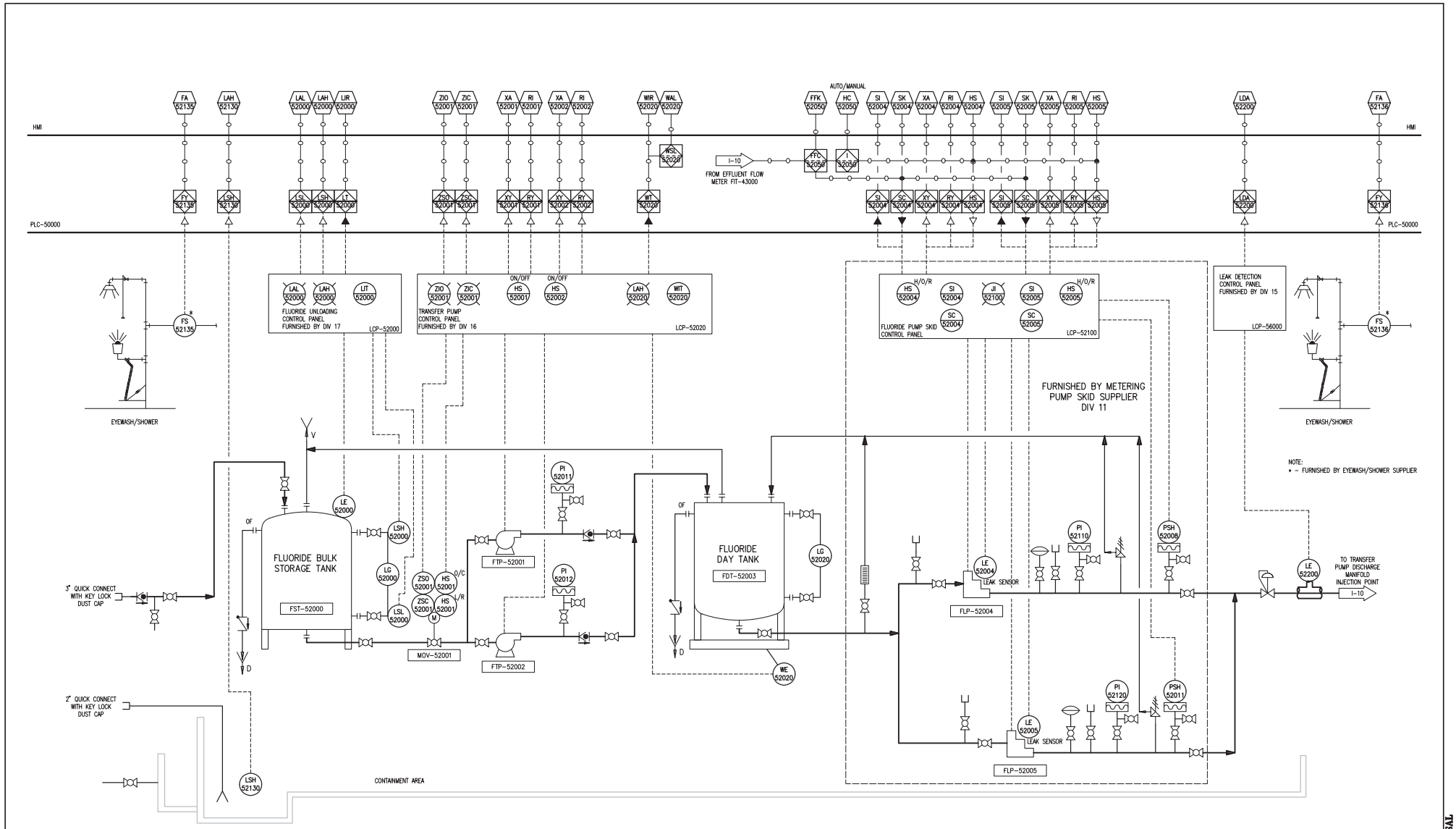

NO.	DATE	ISSUED FOR	BY
1	07/24/15	REQUEST FOR PROPOSAL	G.A.B.

DESIGNED L.P.A.
DRAWN R.D.A.
CHECKED G.A.B.
PROJ. ENGR. G.A.B.

LUIS P. AMARAL P.E.
No. 47573

HAZEN AND SAWYER
Environmental Engineers & Scientists
4000 Hollywood Boulevard, Suite 750N
Hollywood, Florida 33021
Certificate of Authorization Number: 2771

SCALE N/A

CLIENTS PROJECT: –
ENGINEERS PROJECT: 44238-004
CAD REFERENCE: 44238-004BP3-I12

NORTH MIAMI FLORIDA
CITY OF NORTH MIAMI
PUBLIC WORKS UTILITIES

WINSON WATER TREATMENT PLANT
RELIABILITY IMPROVEMENTS – VOLUME C: WTP REHAB

CHEMICAL HANDLING FACILITY – FLUORIDE FEED SYSTEMS

DATE: JULY 2015
SHEET: 227 OF 335
DRAWING: I-12

REQUEST FOR PROPOSAL

PLOT DATE: 7/24/2015 4:34 PM BY: TBOCAS
XREFs= ..\,\,\Tblock\44238-004-BP3-TB
File = H:\44238-004\Drawings\design build package\volume c - wtp rehab\Bid Package 3 - WTP Rehab\instrumentation\Bid Package 3 - WTP Rehab\PID DWG\44238-004BP3-I12 Saved by lamaral Save date = 6/6/2014 5:39 PM

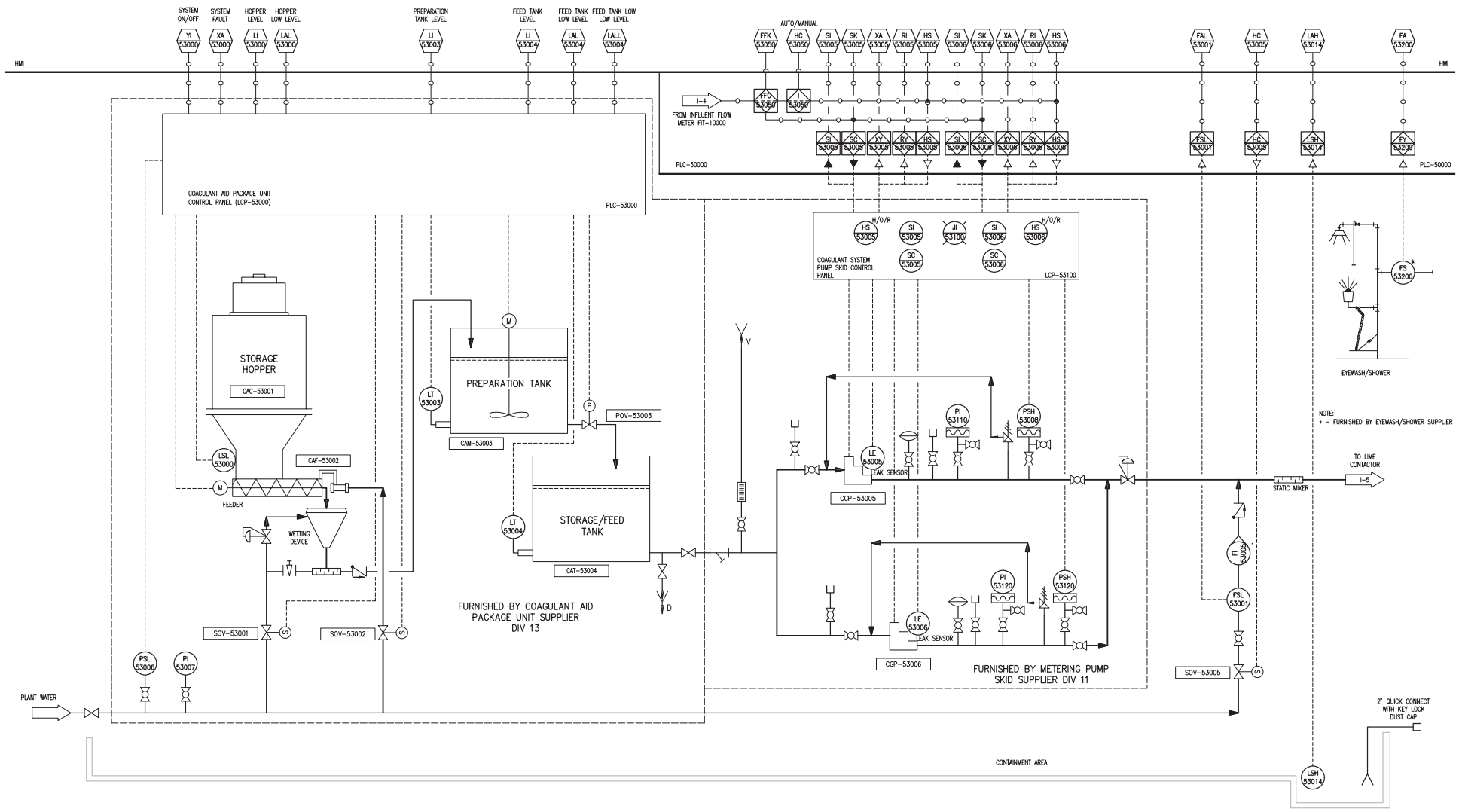

NO.	DATE	ISSUED FOR	BY
1	07/24/15	REQUEST FOR PROPOSAL	G.A.B.

DESIGNED L.P.A.
DRAWN R.D.A.
CHECKED G.A.B.
PROJ. ENGR. G.A.B.

LUIS P. AMARAL P.E.
No. 47573

HAZEN AND SAWYER
Environmental Engineers & Scientists
4000 Hollywood Boulevard, Suite 750N
Hollywood, Florida 33021
Certificate of Authorization Number: 2771

SCALE N/A

CLIENTS PROJECT: –
ENGINEERS PROJECT: 44238-004
CAD REFERENCE: 44238-004BP3-I13

NORTH MIAMI FLORIDA
CITY OF NORTH MIAMI
PUBLIC WORKS UTILITIES

WINSON WATER TREATMENT PLANT
RELIABILITY IMPROVEMENTS – VOLUME C: WTP REHAB

CHEMICAL HANDLING FACILITY COAGULANT FEED SYSTEM

DATE: JULY 2015
SHEET: 228 OF 335
DRAWING: I-13

REQUEST FOR PROPOSAL

PLOT DATE: 7/24/2015 4:34 PM BY: TBOCAS

XREFs= ..\,\,\,\Tblock\44238-004-BP3-TB

File = H:\44238-004\Drawings\design build package\volume c - wtp rehab\Bid Package 3 - WTP Rehab\instrumentation\Bid Package 3 - WTP Rehab\PID DWG\44238-004BP3-I13 Saved by lamaral Save date = 6/6/2014 5:40 PM

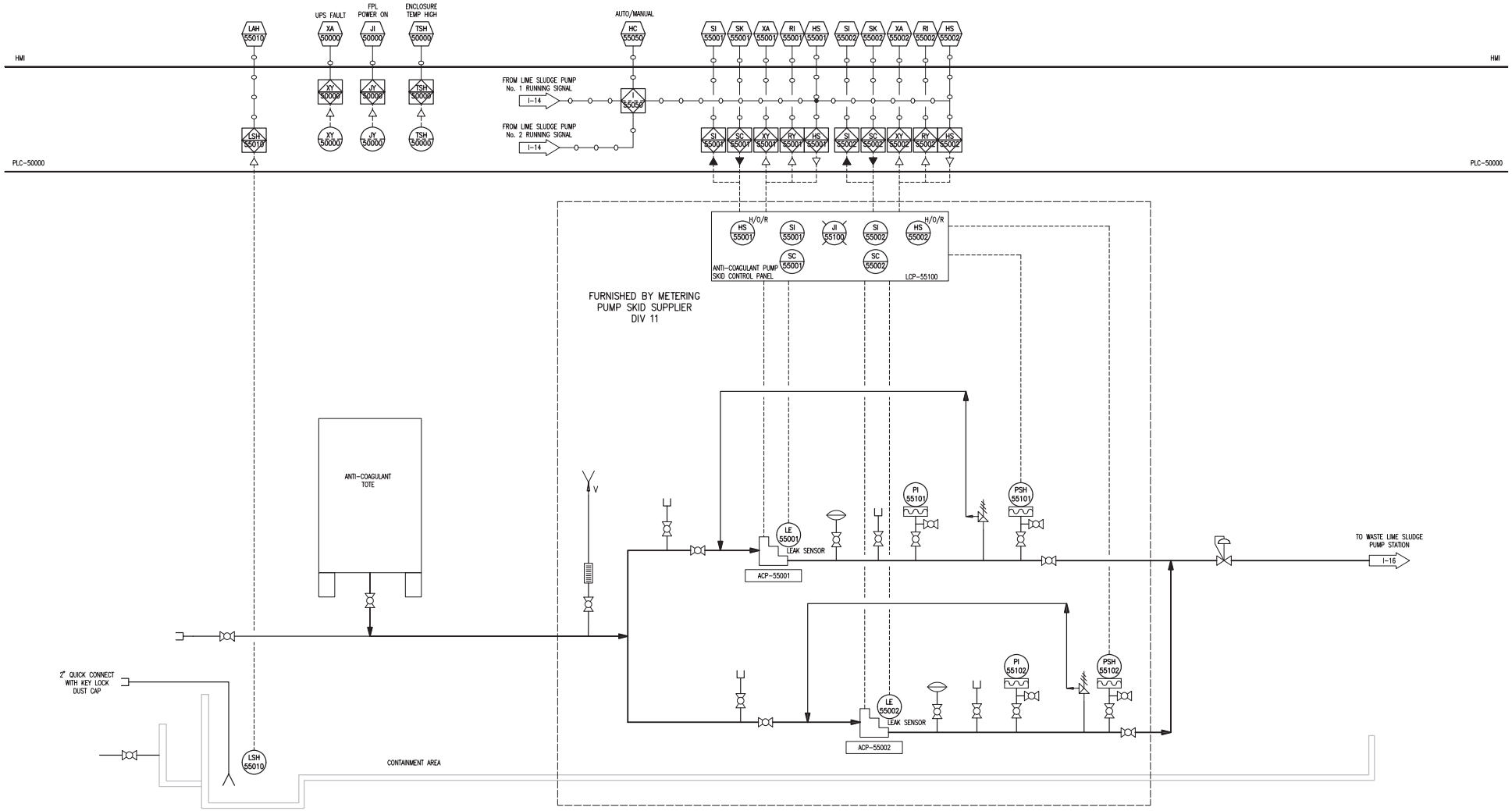

NO.	DATE	ISSUED FOR	BY
1	07/24/15	REQUEST FOR PROPOSAL	G.A.B.

DESIGNED L.P.A.
DRAWN R.D.A.
CHECKED G.A.B.
PROJ. ENGR. G.A.B.

LUIS P. AMARAL P.E.
No. 47573

HAZEN AND SAWYER
Environmental Engineers & Scientists
4000 Hollywood Boulevard, Suite 750N
Hollywood, Florida 33021
Certificate of Authorization Number: 2771

SCALE N/A

CLIENTS PROJECT: –
ENGINEERS PROJECT: 44238-004
CAD REFERENCE: 44238-004BP3-I14

NORTH MIAMI FLORIDA
CITY OF NORTH MIAMI
PUBLIC WORKS UTILITIES

WINSON WATER TREATMENT PLANT
RELIABILITY IMPROVEMENTS – VOLUME C: WTP REHAB

CHEMICAL HANDLING FACILITY –
ANTI-COAGULANT FEED SYSTEM

DATE: JULY 2015
SHEET: 229 OF 335
DRAWING: I-14

REQUEST FOR PROPOSAL

PLOT DATE: 7/24/2015 4:34 PM BY: TBOCAS
XREFs= ..\,\,\Tblock\44238-004-BP3-TB
File = H:\44238-004\Drawings\design build package\volume c - wtp rehab\Bid Package 3 - WTP Rehab\instrumentation\Bid Package 3 - WTP Rehab\PID DWG\44238-004BP3-I14 Saved by lamaral Save date = 6/6/2014 5:40 PM

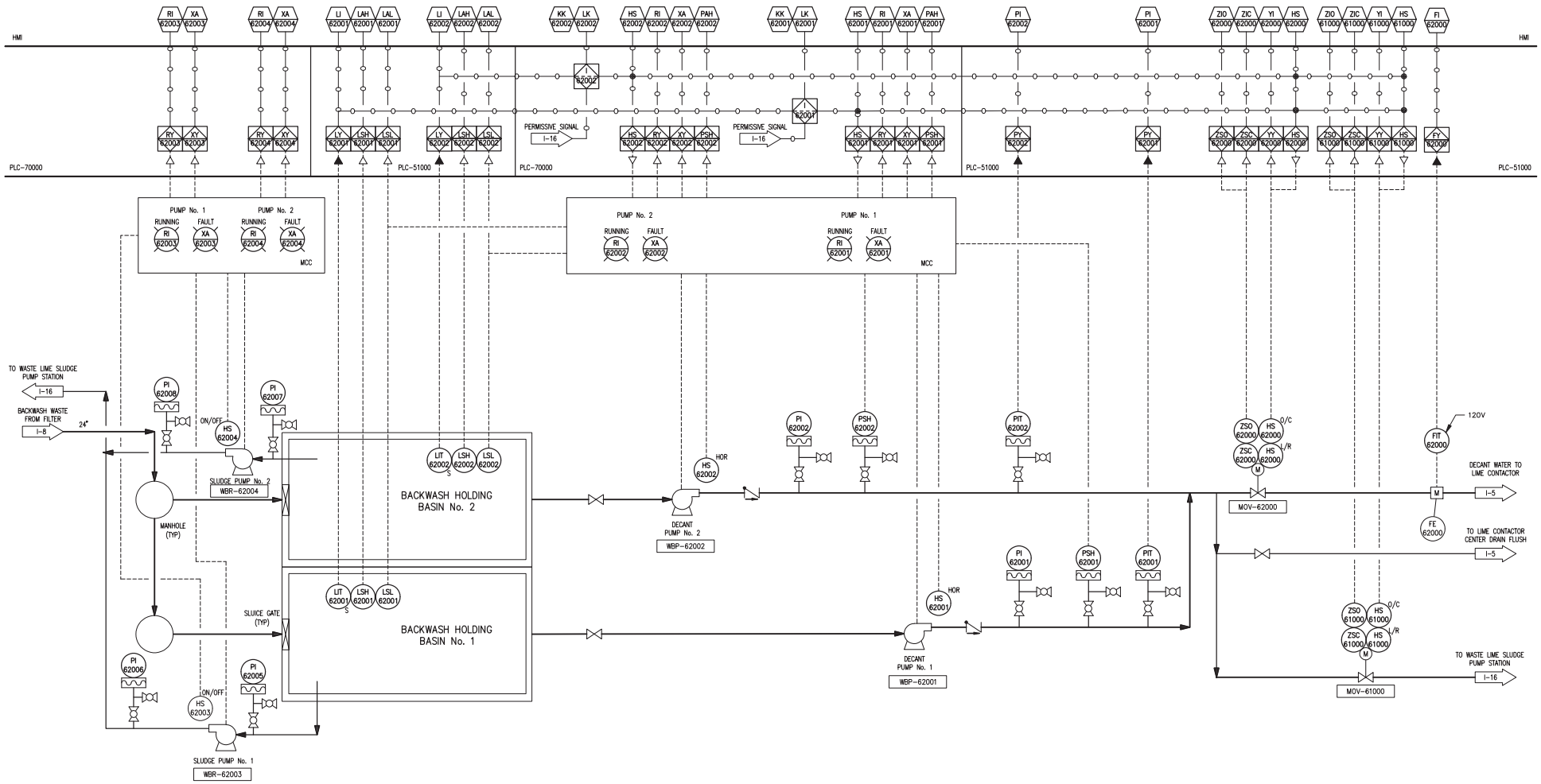

NO.	DATE	ISSUED FOR	BY
1	07/24/15	REQUEST FOR PROPOSAL	G.A.B.

DESIGNED L.P.A.
DRAWN R.D.A.
CHECKED G.A.B.
PROJ. ENGR. G.A.B.

LUIS P. AMARAL P.E.
No. 47573

HAZEN AND SAWYER
Environmental Engineers & Scientists
4000 Hollywood Boulevard, Suite 750N
Hollywood, Florida 33021
Certificate of Authorization Number: 2771

SCALE N/A

CLIENTS PROJECT: –
ENGINEERS PROJECT: 44238-004
CAD REFERENCE: 44238-004BP3-I15

NORTH MIAMI FLORIDA
CITY OF NORTH MIAMI
PUBLIC WORKS UTILITIES

WINSON WATER TREATMENT PLANT
RELIABILITY IMPROVEMENTS – VOLUME C: WTP REHAB

BACKWASH HOLDING BASINS

DATE: JULY 2015
SHEET: 230 OF 335
DRAWING: I-15

REQUEST FOR PROPOSAL

PLOT DATE: 7/24/2015 4:34 PM BY: TBOCAS

XREFs= ..\..\..\Tblock\44238-004-BP3-TB

File = H:\44238-004\Drawings\design build package\volume c - wtp rehab\Bid Package 3 - WTP Rehab\Instrumentation\Bid Package 3 - WTP Rehab\PID DWG\44238-004BP3-I15 Saved by lamaral Save date = 6/6/2014 5:40 PM

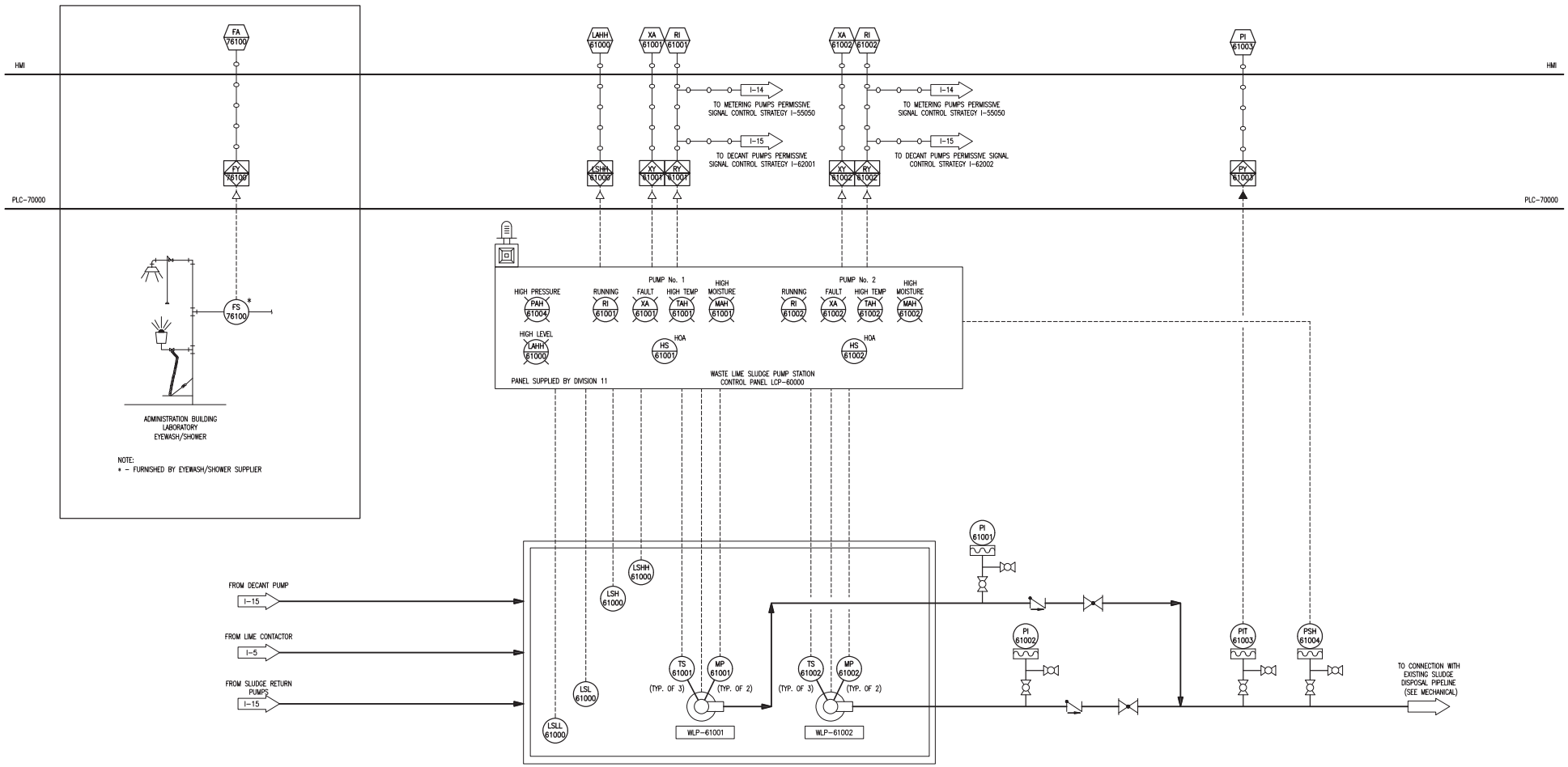

WASTE LIME SLUDGE PUMP STATION

NO.	DATE	ISSUED FOR	BY
1	07/24/15	REQUEST FOR PROPOSAL	G.A.B.

DESIGNED L.P.A.
DRAWN R.D.A.
CHECKED G.A.B.
PROJ. ENGR. G.A.B.

LUIS P. AMARAL P.E.
No. 47573

HAZEN AND SAWYER
Environmental Engineers & Scientists
4000 Hollywood Boulevard, Suite 750N
Hollywood, Florida 33021
Certificate of Authorization Number: 2771

SCALE N/A

CLIENTS PROJECT: –
ENGINEERS PROJECT: 44238-004
CAD REFERENCE: 44238-004BP3-I16

NORTH MIAMI FLORIDA
CITY OF NORTH MIAMI
PUBLIC WORKS UTILITIES

WINSON WATER TREATMENT PLANT
RELIABILITY IMPROVEMENTS – VOLUME C: WTP REHAB
WASTE LIME SLUDGE PUMP STATION

DATE: JULY 2015
SHEET: 231 OF 335
DRAWING: I-16

REQUEST FOR PROPOSAL

PLOT DATE: 7/24/2015 4:34 PM BY: TBOCAS

XREFs= ..\,\,\Tblock\44238-004-BP3-TB

File = H:\44238-004\Drawings\design build package\volume c - wtp rehab\Bid Package 3 - WTP Rehab\Instrumentation\Bid Package 3 - WTP Rehab\PID DWG\44238-004BP3-I16 Saved by lamaral Save date = 6/6/2014 5:40 PM

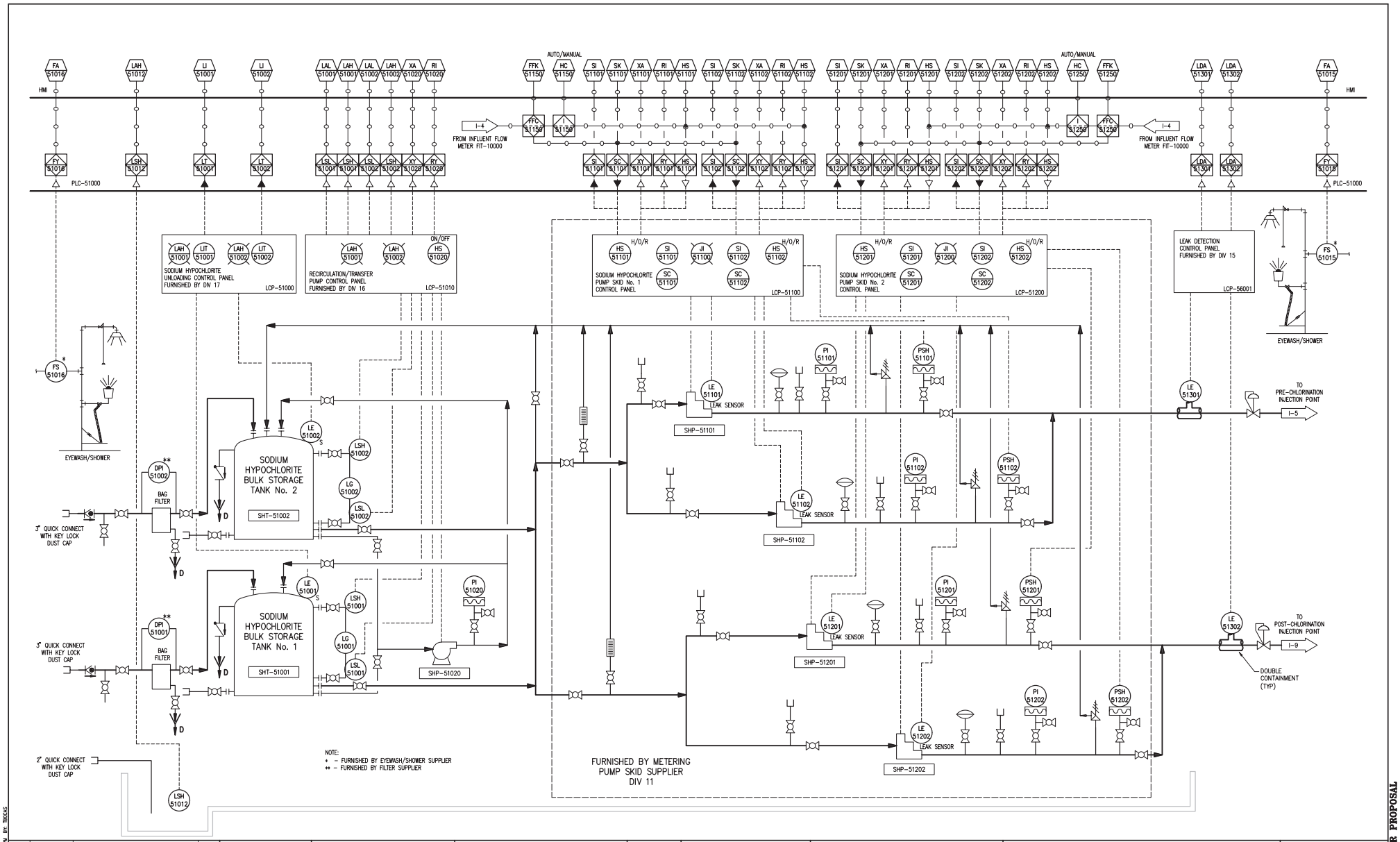

NO.	DATE	ISSUED FOR	BY
1	07/24/15	REQUEST FOR PROPOSAL	G.A.B.

DESIGNED L.P.A.
DRAWN R.D.A.
CHECKED G.A.B.
PROJ. ENGR. G.A.B.

LUIS P. AMARAL P.E.
No. 47573

HAZEN AND SAWYER
Environmental Engineers & Scientists
4000 Hollywood Boulevard, Suite 750N
Hollywood, Florida 33021
Certificate of Authorization Number: 2771

SCALE N/A

CLIENTS PROJECT: –
ENGINEERS PROJECT: 44238-004
CAD REFERENCE: 44238-004BP3-I17

NORTH MIAMI FLORIDA
CITY OF NORTH MIAMI
PUBLIC WORKS UTILITIES

WINSON WATER TREATMENT PLANT
RELIABILITY IMPROVEMENTS – VOLUME C: WTP REHAB

HYPOCHLORITE STORAGE AND FEED FACILITY

DATE: JULY 2015
SHEET: 232 OF 335
DRAWING: I-17

REQUEST FOR PROPOSAL

PLOT DATE: 7/24/2015 4:34 PM BY: TBOCAS
XREFs= ..\,\,\,\Tblock\44238-004-BP3-TB
File = H:\44238-004\Drawings\design build package\volume c - wtp rehab\Bid Package 3 - WTP Rehab\instrumentation\Bid Package 3 - WTP Rehab\PID DWG\44238-004BP3-I17 Saved by lamaral Save date = 6/6/2014 5:40 PM

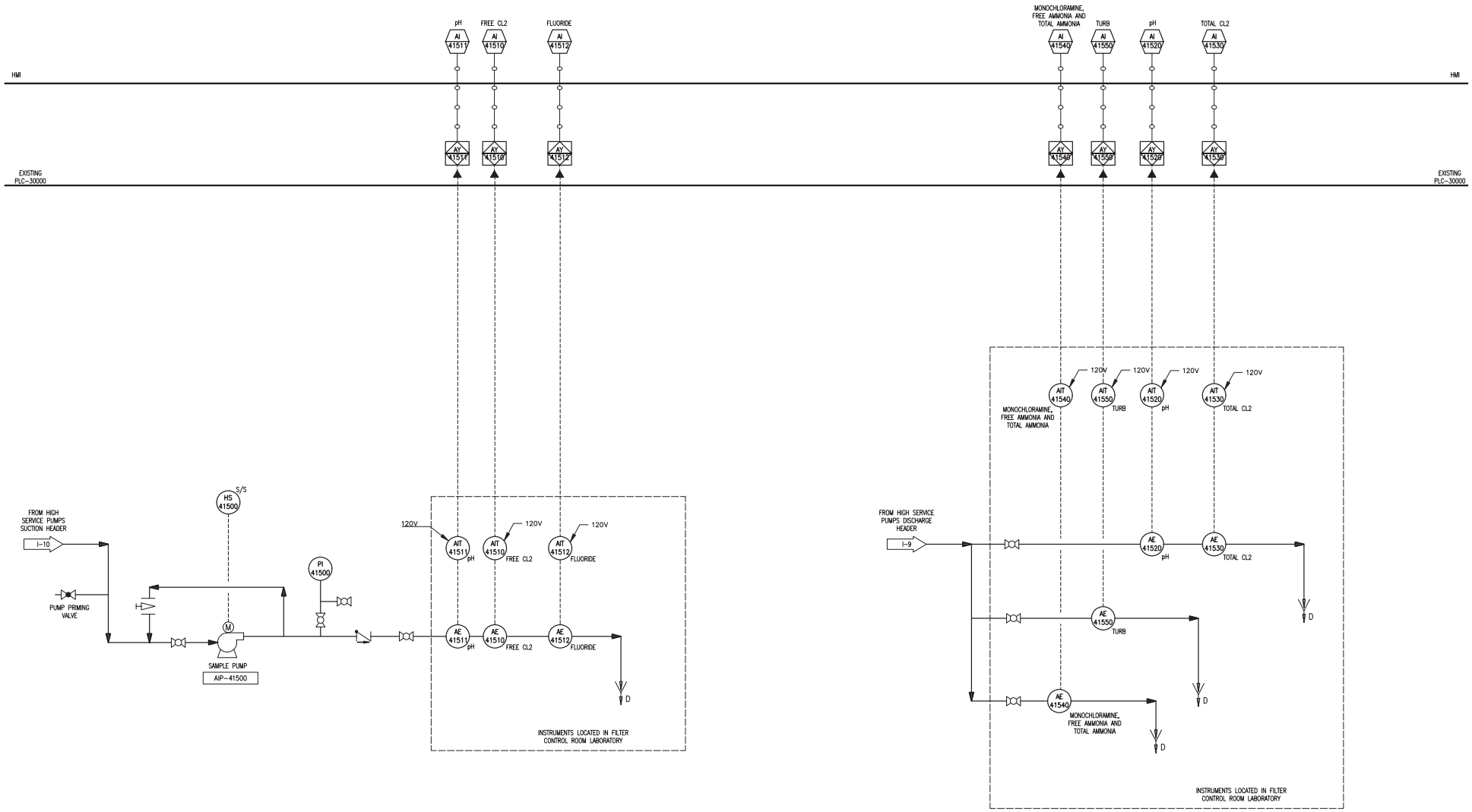

NO.	DATE	ISSUED FOR	BY
1	07/24/15	REQUEST FOR PROPOSAL	G.A.B.

DESIGNED L.P.A.
DRAWN R.D.A.
CHECKED G.A.B.
PROJ. ENGR. G.A.B.

LUIS P. AMARAL P.E.
No. 47573

HAZEN AND SAWYER
Environmental Engineers & Scientists
4000 Hollywood Boulevard, Suite 750N
Hollywood, Florida 33021
Certificate of Authorization Number: 2771

SCALE N/A

CLIENTS PROJECT: –
ENGINEERS PROJECT: 44238-004
CAD REFERENCE: 44238-004BP3-I18

NORTH MIAMI FLORIDA
CITY OF NORTH MIAMI
PUBLIC WORKS UTILITIES

WINSON WATER TREATMENT PLANT
RELIABILITY IMPROVEMENTS – VOLUME C: WTP REHAB

MASTER PUMP STATION ANALYZERS

DATE: JULY 2015
SHEET: 233 OF 335
DRAWING: I-18

REQUEST FOR PROPOSAL

PLOT DATE: 7/24/2015 4:34 PM BY: TBOCAS

XREFs= ..\,\,\Tblock\44238-004-BP3-TB

File = H:\44238-004\Drawings\design build package\volume c - wtp rehab\Bid Package 3 - WTP Rehab\Instrumentation\Bid Package 3 - WTP Rehab\PID DWG\44238-004BP3-I18 Saved by lamaral Save date = 6/6/2014 5:40 PM

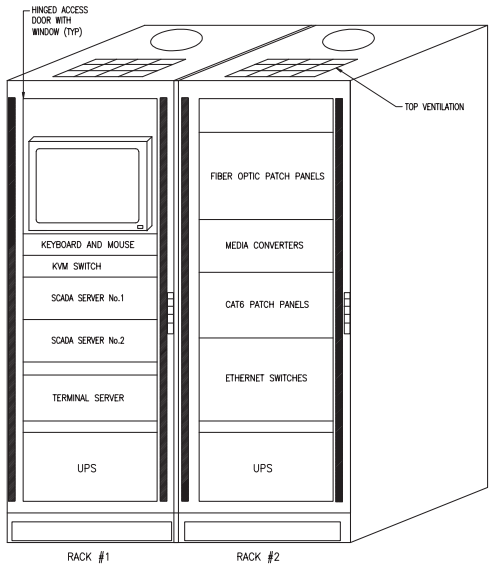

CONTROL ROOM NETWORK/SERVER RACKS

NTS

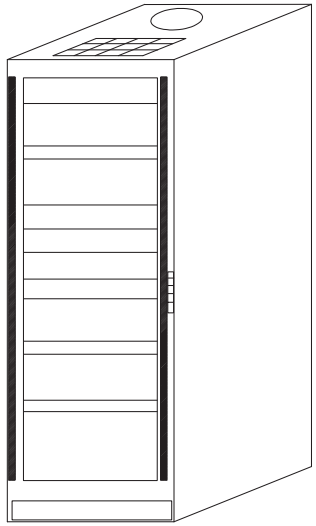

VIDEO/TELEMETRY RACK

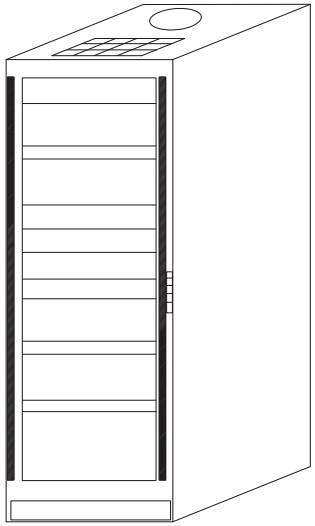

CITY WAN RACK

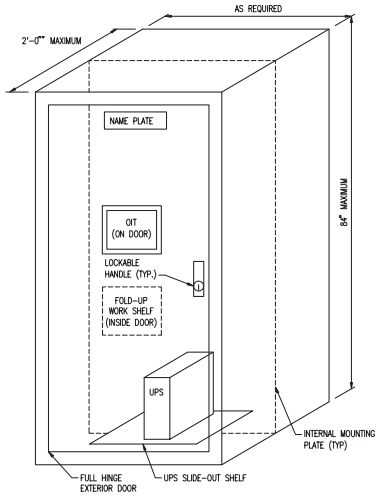

PLC ENCLOSURES

NTS

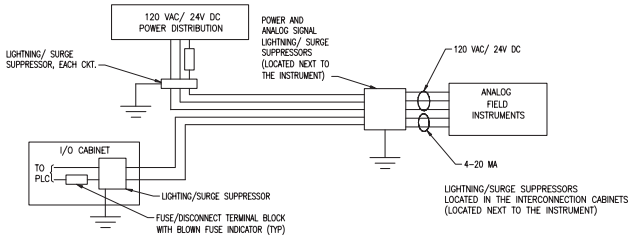

4-WIRE FIELD TRANSMITTERS (AC AND DC)

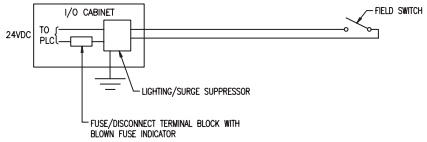

DISCRETE PLC-INPUT CIRCUIT PROTECTION

NTS

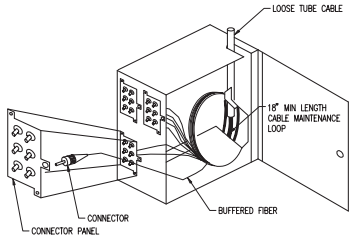

FIBER-OPTIC PATCH PANEL

NTS

NOTE:

FIBER-OPTIC PATCH PANEL TO BE INSTALLED AT EACH PLC ENCLOSURE.

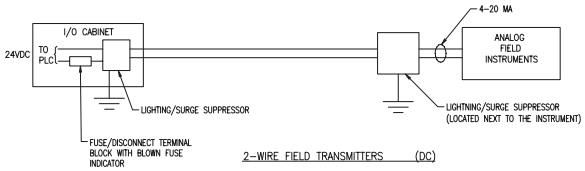

2-WIRE FIELD TRANSMITTERS (DC)

ANALOG CIRCUITS – LIGHTNING PROTECTION

NTS

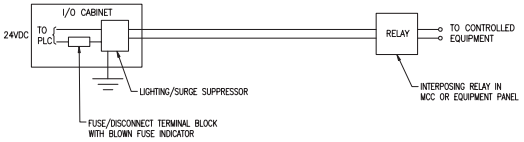

DISCRETE PLC-OUTPUT CIRCUIT PROTECTION

NTS

NO.	DATE	ISSUED FOR	BY
1	07/24/15	REQUEST FOR PROPOSAL	G.A.B.

DESIGNED L.P.A.
DRAWN R.D.A.
CHECKED G.A.B.
PROJ. ENGR. G.A.B.

LUIS P. AMARAL P.E.
No. 47573

HAZEN AND SAWYER
Environmental Engineers & Scientists
4000 Hollywood Boulevard, Suite 750N
Hollywood, Florida 33021
Certificate of Authorization Number: 2771

SCALE N/A

CLIENTS PROJECT: –
ENGINEERS PROJECT: 44238-004
CAD REFERENCE: 44238-004BP3-I19

NORTH MIAMI FLORIDA
CITY OF NORTH MIAMI
PUBLIC WORKS UTILITIES

WINSON WATER TREATMENT PLANT
RELIABILITY IMPROVEMENTS – VOLUME C: WTP REHAB

ENCLOSURE DETAILS

DATE: JULY 2015
SHEET: 234 OF 335
DRAWING: I-19

REQUEST FOR PROPOSAL

PLOT DATE: 7/24/2015 4:34 PM BY: TBOCAS

XREFs= ..\..\..\Tblock\44238-004-BP3-TB

File = H:\44238-004\Drawings\design build package\volume c - wtp rehab\Bid Package 3 - WTP Rehab\instrumentation\Bid Package 3 - WTP Rehab\PID DWG\44238-004BP3-I19 Saved by lamaral Save date = 6/6/2014 5:40 PM

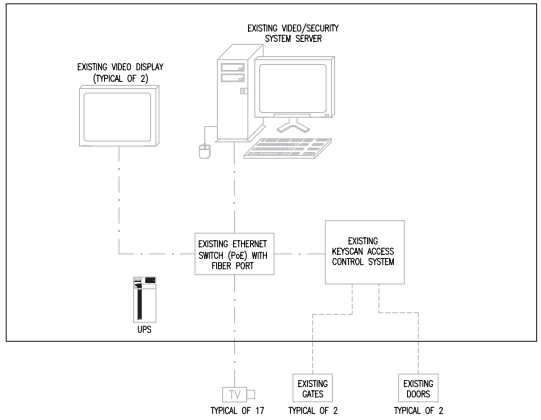

EXISTING VIDEO/SECURITY SYSTEM

LOCATED AT FILTER'S BUILDING OFFICE

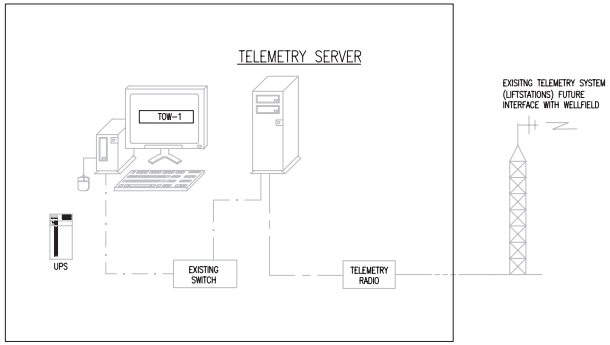

EXISTING TELEMETRY SYSTEM

LOCATED AT FILTER'S BUILDING OFFICE

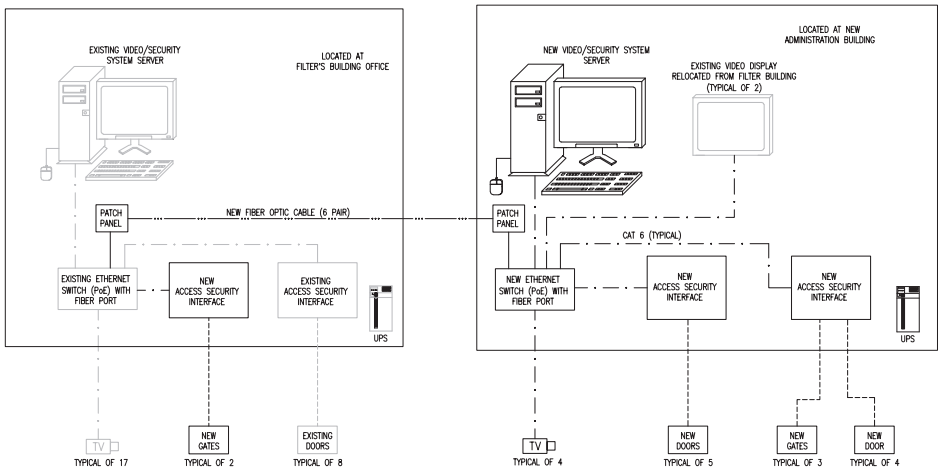

PROPOSED VIDEO/SECURITY SYSTEM MODIFICATIONS

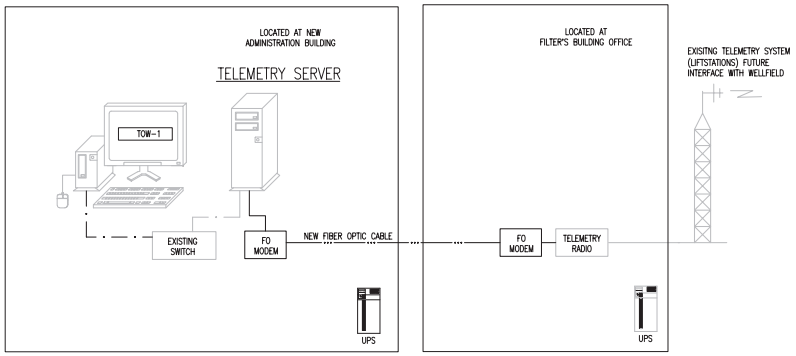

PROPOSED TELEMETRY SYSTEM MODIFICATIONS

NO.	DATE	ISSUED FOR	BY
1	07/24/15	REQUEST FOR PROPOSAL	G.A.B.

DESIGNED L.P.A.
DRAWN R.D.A.
CHECKED G.A.B.
PROJ. ENGR. G.A.B.

LUIS P. AMARAL P.E.
No. 47573

HAZEN AND SAWYER
Environmental Engineers & Scientists
4000 Hollywood Boulevard, Suite 750N
Hollywood, Florida 33021
Certificate of Authorization Number: 2771

SCALE N/A

CLIENTS PROJECT: –
ENGINEERS PROJECT: 44238-004
CAD REFERENCE: 44238-004BP3-I20

NORTH MIAMI FLORIDA
CITY OF NORTH MIAMI
PUBLIC WORKS UTILITIES

WINSON WATER TREATMENT PLANT
RELIABILITY IMPROVEMENTS – VOLUME C: WTP REHAB
SITE SECURITY AND TELEMETRY MODIFICATIONS

DATE: JULY 2015
SHEET: 235 OF 335
DRAWING: I-20

REQUEST FOR PROPOSAL

PLOT DATE: 7/24/2015 4:34 PM BY: TBOAS

XREFs= ..\,\,\Tblock\44238-004-BP3-TB

File = H:\44238-004\Drawings\design build package\volume c - wtp rehab\Bid Package 3 - WTP Rehab\Instrumentation\Bid Package 3 - WTP Rehab\PID DWG\44238-004BP3-I20 Saved by lamaral Save date = 6/6/2014 5:40 PM

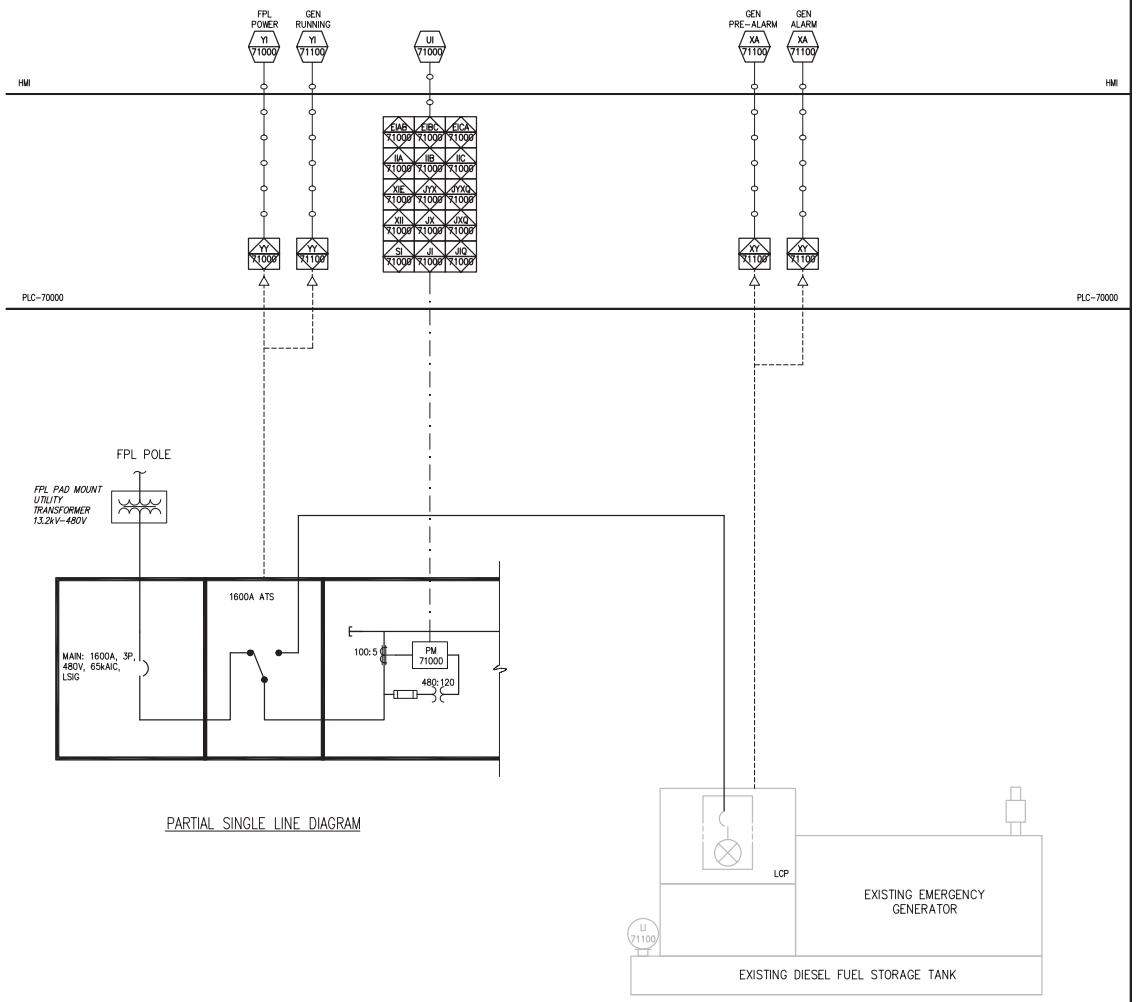

PARTIAL SINGLE LINE DIAGRAM

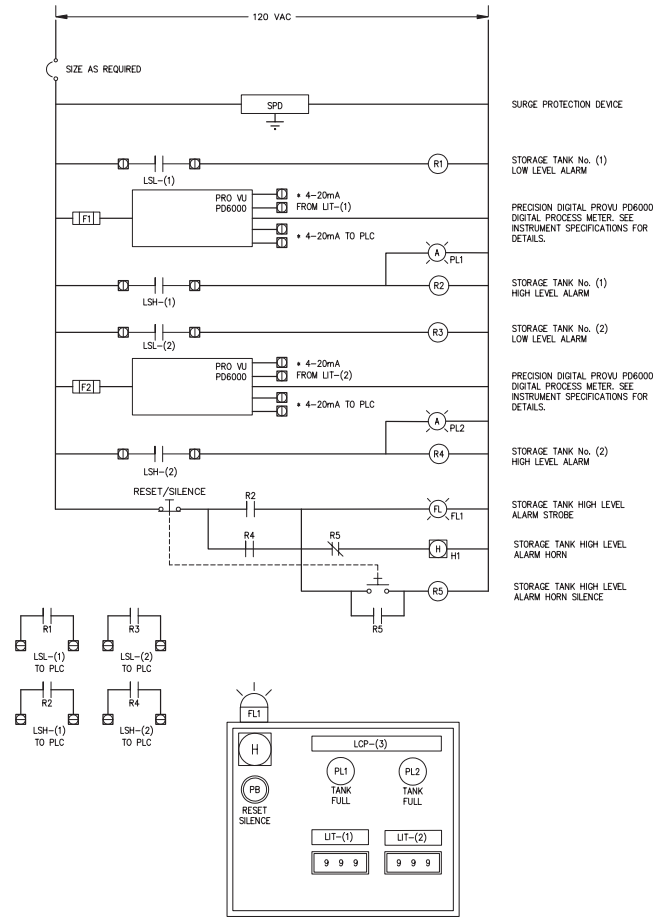

TYPICAL CHEMICAL STORAGE TANK LOADING ALARM PANEL

DESCRIPTION	(1)	(2)	(3)
FLUORIDE SYSTEM	52000	-----	52000
AMMONIA SYSTEM	54000	-----	54000
SODIUM HYPOCHLORITE SYSTEM	51001	51002	51000

NO.	DATE	ISSUED FOR	BY
1	07/24/15	REQUEST FOR PROPOSAL	G.A.B.

DESIGNED L.P.A.
DRAWN R.D.A.
CHECKED G.A.B.
PROJ. ENGR. G.A.B.

LUIS P. AMARAL P.E. No. 47573

HAZEN AND SAWYER
Environmental Engineers & Scientists
4000 Hollywood Boulevard, Suite 750N
Hollywood, Florida 33021
Certificate of Authorization Number: 2771

SCALE N/A

CLIENTS PROJECT: –
ENGINEERS PROJECT: 44238-004
CAD REFERENCE: 44238-004BP3-I21

CITY OF NORTH MIAMI
PUBLIC WORKS UTILITIES

WINSON WATER TREATMENT PLANT
RELIABILITY IMPROVEMENTS – VOLUME C: WTP REHAB

ELECTRICAL MONITORING SYSTEM AND SCHEMATICS

DATE: JULY 2015
SHEET: 236 OF 335
DRAWING: I-21

REQUEST FOR PROPOSAL

PLOT DATE: 7/24/2015 4:34 PM BY: TBOCAS

XREFs= ..\..\..\Tblock\44238-004-BP3-TB

File = H:\44238-004\Drawings\design build package\volume c - wtp rehab\Bid Package 3 - WTP Rehab\instrumentation\Bid Package 3 - WTP Rehab\PID DWG\44238-004BP3-I21 Saved by lamaral Save date = 6/6/2014 5:40 PM

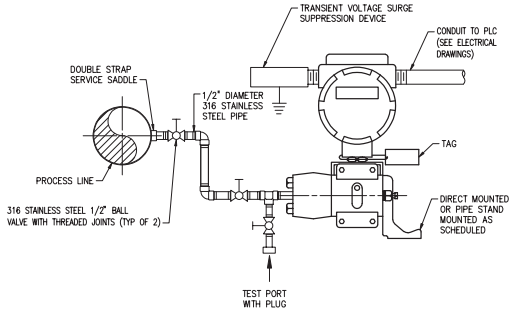

PRESSURE TRANSMITTER (REMOTE MOUNTED)

NTS

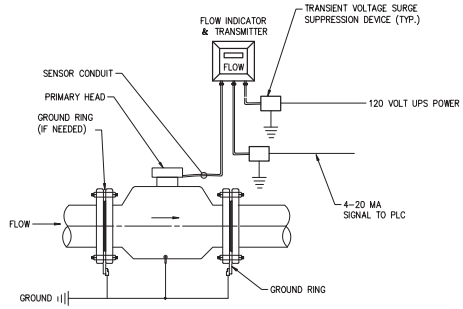

MAGNETIC FLOW METER

NTS

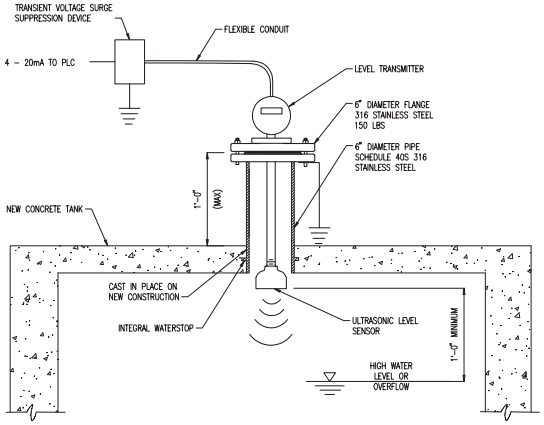

ULTRASONIC LEVEL TRANSMITTER–FLANGE MOUNT IN NEW CONCRETE TANK

NTS

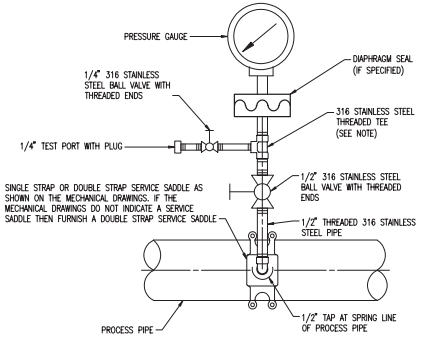

PRESSURE GAUGE INSTRUMENT OR SWITCH

NTS

NOTES:

1. IF A DIAPHRAGM SEAL IS REQUIRED, INSTALL THE TEST PORT AND VALVE ON THE SEAL'S FLUSHING CONNECTION INSTEAD OF TEE.
2. PROVIDE ISOLATING RING SEALS WHERE INDICATED ON THE MECHANICAL DRAWINGS.

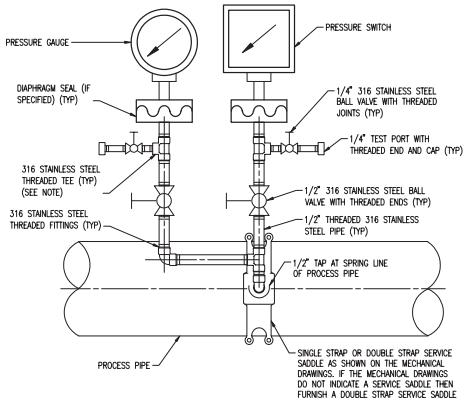

PRESSURE SWITCH AND GAUGE DETAIL

NTS

NOTES:

1. IF A DIAPHRAGM SEAL IS REQUIRED, INSTALL THE TEST PORT AND VALVE ON THE SEAL'S FLUSHING CONNECTION INSTEAD OF TEE.
2. PROVIDE ISOLATING RING SEALS WHERE INDICATED ON THE MECHANICAL DRAWINGS.

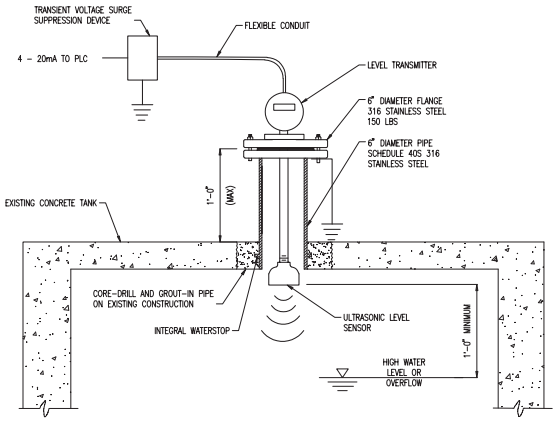

ULTRASONIC LEVEL TRANSMITTER–FLANGE MOUNT IN EXISTING CONCRETE TANK

NTS

NO.	DATE	ISSUED FOR	BY
1	07/24/15	REQUEST FOR PROPOSAL	G.A.B.

DESIGNED L.P.A.
DRAWN R.D.A.
CHECKED G.A.B.
PROJ. ENGR. G.A.B.

LUIS P. AMARAL P.E.
No. 47573

HAZEN AND SAWYER
Environmental Engineers & Scientists
4000 Hollywood Boulevard, Suite 750N
Hollywood, Florida 33021
Certificate of Authorization Number: 2771

SCALE N/A

CLIENTS PROJECT: –
ENGINEERS PROJECT: 44238-004
CAD REFERENCE: 44238-004BP3-I22

CITY OF NORTH MIAMI
PUBLIC WORKS UTILITIES

WINSON WATER TREATMENT PLANT
RELIABILITY IMPROVEMENTS – VOLUME C: WTP REHAB

INSTALLATION AND MISCELLANEOUS DETAILS
SHEET 1

DATE: JULY 2015
SHEET: 237 OF 335
DRAWING: I-22

REQUEST FOR PROPOSAL

PLOT DATE: 7/24/2015 4:35 PM BY: TBOCAS

XREFs= ..\..\..\Tblock\44238-004-BP3-TB

File = H:\44238-004\Drawings\design build package\volume c - wtp rehab\Bid Package 3 - WTP Rehab\Instrumentation\Bid Package 3 - WTP Rehab\PID DWG\44238-004BP3-I22 Saved by lamaral Save date = 6/6/2014 5:40 PM

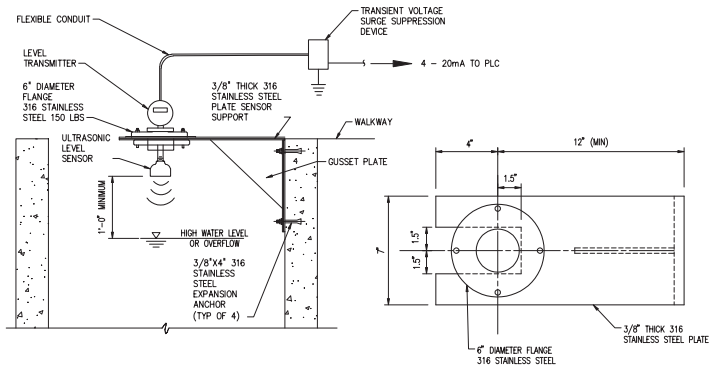

ELEVATION VIEW

SENSOR SUPPORT DETAIL

ULTRASONIC LEVEL TRANSMITTER – OPEN TANK MOUNTED

NTS

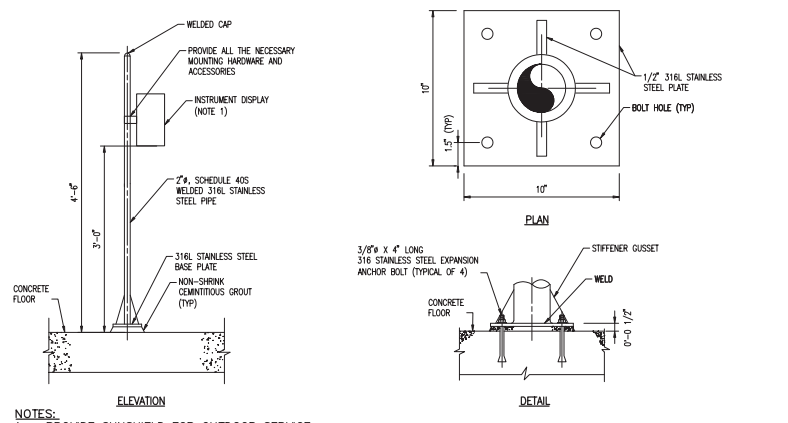

ELEVATION

PLAN

DETAIL

NOTES:
1. PROVIDE SUNSHIELD FOR OUTDOOR SERVICE

PIPE STAND TRANSMITTER MOUNT

NTS

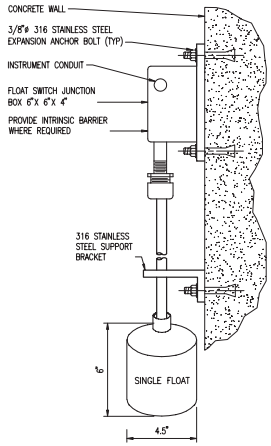

SUSPENDED FLOAT SWITCH

NTS

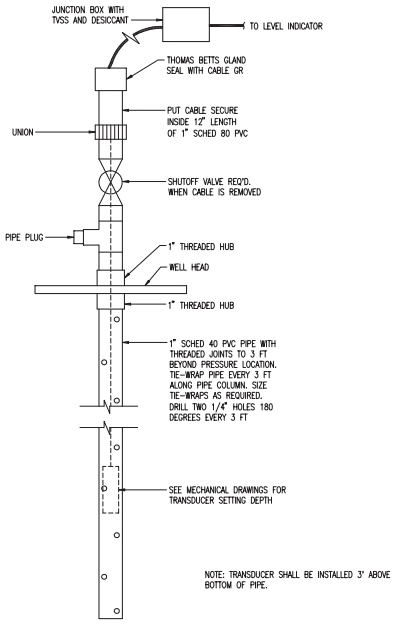

RAW WATER LEVEL TRANSDUCER

NTS

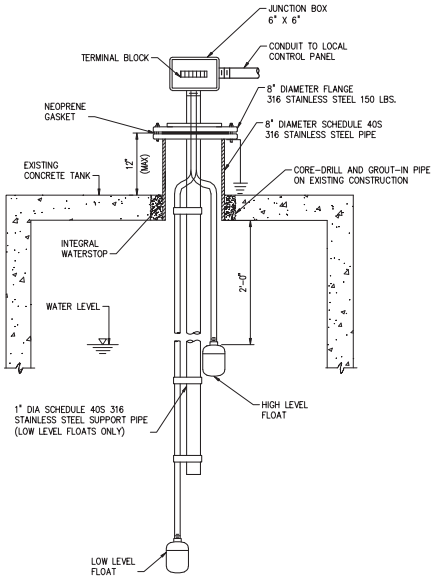

FLANGE MOUNTED FLOAT SWITCH – EXISTING CONCRETE TANK

NTS

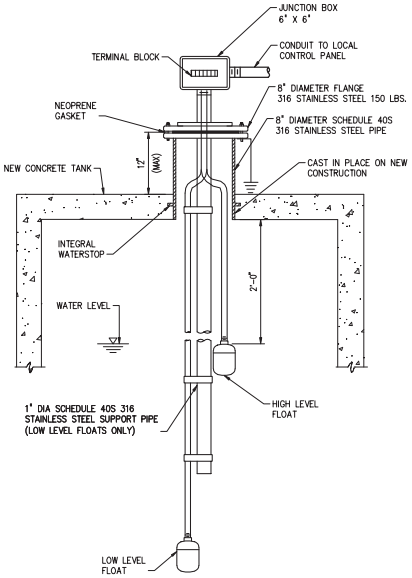

FLANGE MOUNTED FLOAT SWITCH – NEW CONCRETE TANK

NTS

NO.	DATE	ISSUED FOR	BY
1	07/24/15	REQUEST FOR PROPOSAL	G.A.B.

DESIGNED L.P.A.
DRAWN R.D.A.
CHECKED G.A.B.
PROJ. ENGR. G.A.B.

LUIS P. AMARAL P.E.
No. 47573

HAZEN AND SAWYER
Environmental Engineers & Scientists
4000 Hollywood Boulevard, Suite 750N
Hollywood, Florida 33021
Certificate of Authorization Number: 2771

SCALE N/A

CLIENTS PROJECT: –
ENGINEERS PROJECT: 44238-004
CAD REFERENCE: 44238-004BP3-I23

NORTH MIAMI FLORIDA
CITY OF NORTH MIAMI
PUBLIC WORKS UTILITIES

WINSON WATER TREATMENT PLANT
RELIABILITY IMPROVEMENTS – VOLUME C: WTP REHAB

INSTALLATION AND MISCELLANEOUS DETAILS
SHEET 2

DATE: JULY 2015
SHEET: 238 OF 335
DRAWING: I-23

REQUEST FOR PROPOSAL

PLOT DATE: 7/24/2015 4:35 PM BY: TBOCAS

XREFs= ..\..\..\Tblock\44238-004-BP3-TB

File = H:\44238-004\Drawings\design build package\volume c - wtp rehab\Bid Package 3 - WTP Rehab\Instrumentation\Bid Package 3 - WTP Rehab\PID DWG\44238-004BP3-I23 Saved by lamaral Save date = 6/6/2014 5:39 PM

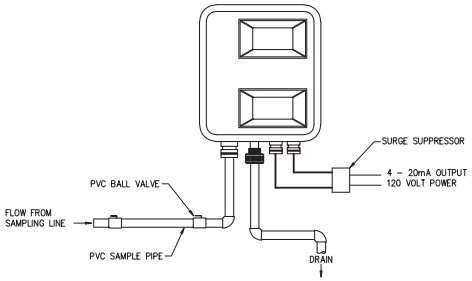

FLUORIDE ANALYZER INSTALLATION DETAIL

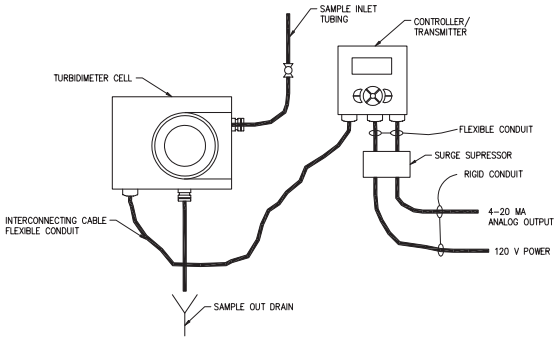

TURBIDITY ANALYZER INSTALLATION DETAIL

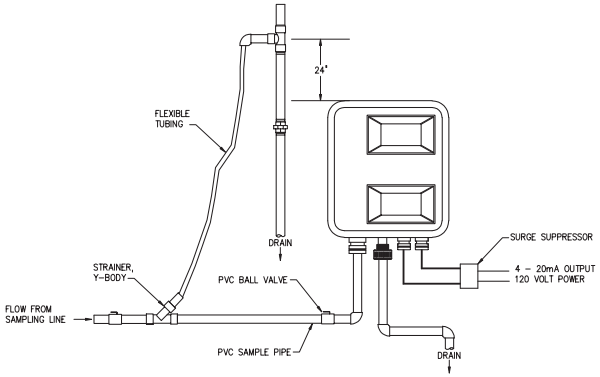

RESIDUAL CHLORINE ANALYZER INSTALLATION DETAIL

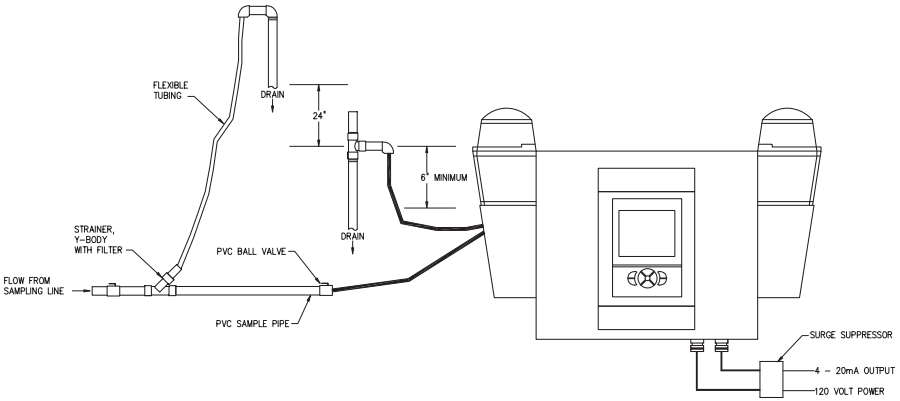

AMMONIA/MONOCHLORAMINE ANALYZER INSTALLATION DETAIL

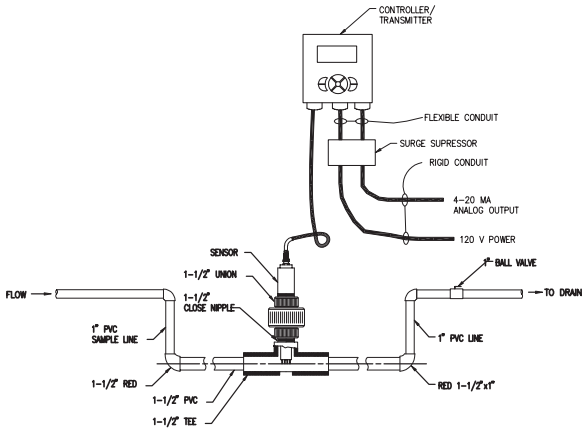

PH SENSOR INSTALLATION DETAIL

NO.	DATE	ISSUED FOR	BY
1	07/24/15	REQUEST FOR PROPOSAL	G.A.B.

DESIGNED L.P.A.
DRAWN R.D.A.
CHECKED G.A.B.
PROJ. ENGR. G.A.B.

LUIS P. AMARAL P.E.
No. 47573

HAZEN AND SAWYER
Environmental Engineers & Scientists
4000 Hollywood Boulevard, Suite 750N
Hollywood, Florida 33021
Certificate of Authorization Number: 2771

SCALE N/A

CLIENTS PROJECT: –
ENGINEERS PROJECT: 44238–004
CAD REFERENCE: 44238–004BP3–I24

NORTH MIAMI FLORIDA
CITY OF NORTH MIAMI
PUBLIC WORKS UTILITIES

WINSON WATER TREATMENT PLANT
RELIABILITY IMPROVEMENTS – VOLUME C: WTP REHAB
INSTALLATION AND MISCELLANEOUS DETAILS SHEET 3

DATE: JULY 2015
SHEET: 239 OF 335
DRAWING: I–24

REQUEST FOR PROPOSAL

PLOT DATE: 7/24/2015 4:35 PM BY: TBOAS

XREFs= ..\,\,\Tblock\44238–004–BP3–TB

File = H:\44238–004\Drawings\design build package\volume c – wtp rehab\Bid Package 3 – WTP Rehab\Instrumentation\Bid Package 3 – WTP Rehab\PID DWG\44238–004BP3–I24 Saved by lamaral Save date = 6/6/2014 5:39 PM

ELECTRICAL PLAN/LAYOUT

SYMBOL	DESCRIPTION
TTC	TELEPHONE TERMINAL CABINET
	TERMINAL JUNCTION BOX
	ELECTRICAL EQUIPMENT
X	CEILING MOUNTED DOWNLIGHT LUMINAIRE – SEE SCHEDULE FOR TYPE
X	FLOURESCENT LUMINAIRE, SURFACE OR LAY IN TYPE SEE SCHEDULE FOR TYPE
X	LUMINAIRE AND POLE – SEE SCHEDULE FOR TYPE
X	WALL MOUNTED LUMINAIRE – SEE SCHEDULE FOR TYPE
X	FLOOD LIGHTS – AIM IN THE DIRECTION SHOWN SEE SCHEDULE FOR TYPE
X	EXIT LIGHTS – SOLID SECTION IS DIRECTION OF FACE SEE SCHEDULE FOR TYPE
X	EMERGENCY LIGHT WITH BATTERY PACK SEE SCHEDULE FOR TYPE
LWx	EXTERIOR WALL PACK LIGHTING FIXTURES SEE SCHEDULE FOR TYPE AND DETAILS
X Y Z (TYP)	X=FIXTURE TYPE, Y=CIRCUIT, Z=SWITCH; IF NO Z, CONNECT DIRECTLY TO CIRCUIT BREAKER.
OC	LIGHTING OCCUPANCY SENSOR
WIFI	WIRELESS INTERNET EQUIPMENT
[B2]	CONDUIT/CONDUCTOR – REFER TO CIRCUIT SCHEDULE
LPA-2	HOME RUN – PANEL AND CIRCUIT NUMBER SHOWN
	EXPOSED CONDUIT AND CONDUCTORS*
	UNDERGROUND CONDUIT AND CONDUCTORS* NOTE: * ALL UNMARKED CONDUIT RUNS CONSIST OF 2#12, 1#12G IN 3/4"C.
YCX	YARD CONDUIT. REFER TO YARD CONDUIT SCHEDULE
DB	DIRECT BURIED CONDUIT
	CONDUIT, STUBBED AND CAPPED AS SHOWN
GND	GROUND WIRE, 4/0 UNLESS OTHERWISE NOTED
	6 FOOT GROUND WIRE PIGTAIL, 4/0 UNLESS OTHERWISE NOTED
	GROUND ROD – 5/8" x 20' COPPER CLAD UNLESS OTHERWISE NOTED
S	WALL SWITCH: 2- DOUBLE POLE, 3- THREE WAY, 4- FOUR WAY, WP-WEATHERPROOF, P- PILOT LIGHT, K- KEY OPERATED, D- DIMMER, CRE- CORROSION RESISTANT
	CONVENIENCE RECEPTACLE – 20A DUPLEX UNLESS SPECIFIED OTHERWISE: WP-WEATHERPROOF, C- CLOCK HANGER, TL- TWIST LOCK, CRE- CORROSION RESISTANT, GFI-GROUND FAULT INTERRUPTER
	CONVENIENCE RECEPTACLE – 20A QUADROPLEX UNLESS SPECIFIED OTHERWISE
	CONVENIENCE RECEPTACLE – 20A DUPLEX UNLESS SPECIFIED OTHERWISE. LOCATED ABOVE COUNTER TOP. GFI-GROUND FAULT INTERRUPTER
	CONVENIENCE RECEPTACLE – 20A DUPLEX UNLESS SPECIFIED OTHERWISE. MOUNTED FLUSH IN FLOOR.
30	RECEPTACLE, SPECIAL PURPOSE – AMPERAGE AS INDICATED.
	TELEPHONE/DATA RECEPTACLE (OUTLET BOX, 18" AFF) W – WALL MOUNTED, 54" AFF
	TELEPHONE/DATA RECEPTACLE MOUNTED FLUSH IN FLOOR
J	JUNCTION BOX NEMA 12 ENCLOSURE UNLESS INDICATED OTHERWISE. 4X = NEMA 4X SS
TV	SECURITY CAMERA
	PROGRAMMABLE LOGIC CONTROLLER (PLC)

FIRE ALARM SYSTEM LEGEND ON DRAWING E-19

FIELD INSTRUMENTS ANNOTATION

XXX PS or SOURCE WHERE APPLICABLE
000

ACCESS CONTROL SYSTEM

MAG	MAGNETIC DOOR LOCK
CR	CARD READER
PTO	PUSH TO OPEN BUTTON
COM	INTERCOM

ABBREVIATIONS

ABBREVIATIONS	DESCRIPTION
A	AMMETER, AMPERE
AC	ALTERNATING CURRENT
AF	AMPERE FRAME
AFD	ADJUSTABLE FREQUENCY DRIVE
AFF	ABOVE FINISHED FLOOR
AFG	ABOVE FINISHED GRADE
AS	AMMETER SWITCH, AMPERE SENSOR
ASU	AIR SUPPLY UNIT
ATS	AUTOMATIC TRANSFER SWITCH
BC	BYPASS CONTACTOR
BRKR	BREAKER
C	CONDUIT, CONTACTOR
CB	CIRCUIT BREAKER
CKT	CIRCUIT
CMS	COMBINATION MOTOR STARTER
CPT	CONTROL POWER TRANSFORMER
CR	CONTROL RELAY
CT	CURRENT TRANSFORMER
DC	DIRECT CURRENT
DIV	DIVISION
DS	DISCONNECT SWITCH
E.C.	EMPTY CONDUIT
EF	EXHAUST FAN
EG	ELECTRICAL GROUND
ETM	ELAPSED TIME METER
EXST	EXISTING
FDR	FEEDER
F, FU	FUSE
FI	FLOW INDICATOR
FLR	FLOOR
FLUOR	FLUORESCENT
FM	FLOW METER
FS	FLOAT SWITCH, FLOW SWITCH
FT	FLOW TRANSMITTER
FUT	FUTURE
FVNR	FULL VOLTAGE NON-REVERSING STARTER
G	GREEN, GROUND
GALV	GALVANIZED
GEN	GENERATOR
GFI	GROUND FAULT INTERRUPTER
GFR	GROUND FAULT RELAY
GND	GROUND
HH	HANDHOLE
HID	HIGH INTENSITY DISCHARGE
HOA	HAND/OFF/AUTO
HOR	HAND/OFF/REMOTE
HPS	HIGH PRESSURE SODIUM
HVAC	HEATING, VENTILATING & AIR CONDITIONING
IC	INTERRUPTING CAPACITY
I & C	INSTRUMENTATION AND CONTROL
INST	INSTANTANEOUS
IP	INSTRUMENT PANEL (PANELBOARD)
J, J-BOX	JUNCTION BOX
K	KEY INTERLOCK
KK	KIRK KEY INTERLOCK
LA	LIGHTNING ARRESTER
LC	LIGHTING CONTACTOR
LP	LIGHTING PANEL (PANELBOARD)
LR	LOCAL/REMOTE, LATCHING RELAY
LS	LIMIT SWITCH
LT FLEX	LIQUID TIGHT FLEX CONDUIT
LTG	LIGHTING
M	MAGNETIC CONTACTOR COIL OR MOTOR
MA	MILLIAMPS
MCB	MAIN CIRCUIT BREAKER
MCC	MOTOR CONTROL CENTER
MDP	MAIN DISTRIBUTION PANEL
MERC	MERCURY VAPOR
MH	MOTOR HEATER, MANHOLE
MLO	MAIN LUGS ONLY
MPZ	MINI POWER ZONE
MS	MOTOR STARTER
MSC	MANUFACTURER SUPPLIED CABLE
MT	MOUNT
MTD	MOTOR TEMPERATURE DETECTOR
N	NEUTRAL
NC	NORMALLY CLOSED
NEMA	NATIONAL ELECTRIC MANUFACTURER'S ASSOCIATION
NF	NON-FUSED
NO	NORMALLY OPEN
NP	NAMEPLATE
NTS	NOT TO SCALE
OL	OVERLOAD RELAY
P	POLE
PB	PULL BOX
PC	PHOTOCELL
PH	PHASE
PM	PHASE MONITOR,POWER METER
PNL	PANEL
PP	POWER PANEL (480VAC)
PR	PAIR
PS	PRESSURE SWITCH
PT	POTENTIAL TRANSFORMER
PVC	POLYVINYL CHLORIDE CONDUIT
RCPT	RECEPTACLE
RMS	ROOT MEAN SQUARE
RS	RIGID STEEL CONDUIT
RGS	RIGID GALVANIZED STEEL CONDUIT
RTU	REMOTE TELEMETRY UNIT
SC	SURGE CAPACITOR
SF	SUPPLY FAN
SH	SPACE HEATER
S/N	SOLID NEUTRAL
SPD	SPEED
SSRVS	SOLID STATE REDUCED VOLTAGE STARTER
SST	STAINLESS STEEL
SV	SOLENOID VALVE
SW	SWITCH
SWBD	SWITCHBOARD
SWGR	SWITCHGEAR
SYM	SYMMETRICAL
T	THERMOSTAT
TB	TERMINAL BOARD
TDR	TIME DELAY RELAY
TJB	TERMINAL JUNCTION BOX
TS	THERMAL SWITCH
TSP	TWISTED SHIELDED PAIR
TVSS	TRANSIENT VOLTAGE SURGE SUPPRESSION
TYP	TYPICAL
UVR	UNDER VOLTAGE RELAY
V	VOLTMETER, VOLT
VFD	VARIABLE FREQUENCY DRIVE
VS	VOLTMETER SWITCH
W	WATT
WHD	WATTHOUR DEMAND METER
WP	WEATHERPROOF
XFMR	TRANSFORMER

ONE LINE DIAGRAMS, RISER DIAGRAMS AND SCHEMATICS

SYMBOL	DESCRIPTION
5	MOTOR SQUIRREL CAGE INDUCTION UNLESS OTHERWISE NOTED – HORSEPOWER INDICATED
	OVERLOAD RELAY HEATER
1	MAGNETIC STARTER WITH NEMA SIZE INDICATED
MCP	MOTOR CIRCUIT PROTECTOR, MAGNETIC, 3 POLE UNLESS INDICATED OTHERWISE.
400	CIRCUIT BREAKER, THERMAL MAGNETIC TRIP SHOWN, 3 POLE UNLESS INDICATED OTHERWISE.
400 225	FUSED SWITCH, SWITCH AND FUSE CURRENT RATING INDICATED, 3 POLE UNLESS INDICATED OTHERWISE.
100	SWITCH – CURRENT RATING INDICATED, 3 POLE UNLESS INDICATED OTHERWISE.
600AF 400AT	DRAWOUT CIRCUIT BREAKER, LOW VOLTAGE 600= FRAME RATING, 400=TRIP SETTING
600AF 400AT	DRAWOUT CIRCUIT BREAKER, MEDIUM VOLTAGE 600= FRAME RATING, 400=TRIP SETTING
600 400	DRAWOUT FUSED SWITCH, LOW OR MEDIUM VOLTAGE 600= FRAME RATING, 400=FUSE RATING
(3)	CURRENT TRANSFORMER, NUMBER OF WINDINGS INDICATED
480-120 /208V 15 KVA, 3ø K-4 RATED	TRANSFORMER, VOLTAGES, PHASE AND RATING INDICATED AS APPLICABLE
	LIGHTNING ARRESTER
	CAPACITOR OR SURGE CAPACITOR
M	UTILITY METER
G	GENERATOR
X 0-600V	METER SCALE RANGE SHOWN IF REQUIRED A – AMPS, V – VOLTS, PM – PHASE MONITOR, P – POWER METER
	FUSE
TVSS	TRANSIENT VOLTAGE SURGE SUPPRESSION
	GROUND
CPT 120V	CONTROL TRANSFORMER
GFR	GROUND FAULT RELAY WITH C.T.
	PUSH-BUTTON SWITCH, MOMENTARY CONTACT, NORMALLY OPEN
	PUSH-BUTTON SWITCH, MOMENTARY CONTACT, NORMALLY CLOSED
	PUSH BUTTON SWITCH, MAINTAINED CONTACTS WITH MECHANICAL INTERLOCK
	REMOTE DEVICE
A	INDICATING LIGHT – LETTER INDICATES COLOR A – AMBER, B – BLUE, C – CLEAR, G – GREEN, R – RED, W – WHITE
S M	MANUAL MOTOR STARTER SWITCH, NEMA 4X UNLESS OTHERWISE NOTED. NUMBER OF POLES AS REQUIRED
PB 4X	PUSH-BUTTON STATION, NEMA 12 ENCLOSURE UNLESS INDICATED OTHERWISE. 4X = NEMA 4X STAINLESS STEEL ENCLOSURE. SEE CONTROL DIAGRAMS FOR TYPE PUSH BUTTON REQUIRED
30 4X	NONFUSED DISCONNECT SWITCH, SIZE INDICATED, 3 POLE UNLESS INDICATED OTHERWISE, NEMA 12 ENCLOSURE, 4X = NEMA 4X STAINLESS STEEL
F 60 40 4X	FUSED DISCONNECT SWITCH, SIZE INDICATED (60 = SWITCH RATING: 40 = FUSE RATING) 3 POLE UNLESS INDICATED OTHERWISE, NEMA 12 ENCLOSURE, 4X = NEMA 4X STAINLESS STEEL
LC 30 4X	LIGHTING CONTACTOR, CURRENT RATING INDICATED, NEMA 12 ENCLOSURE UNLESS INDICATED OTHERWISE. SEE CONTROL DIAGRAM FOR NUMBER OF POLES. 4X = NEMA 4X STAINLESS STEEL
2 4X	MAGNETIC STARTER, NEMA SIZE INDICATED, NEMA 12 ENCLOSURE, UNLESS INDICATED OTHERWISE. SEE CONTROL DIAGRAM. 4X = NEMA 4X STAINLESS STEEL
2 4X	COMBINATION (FUSE OR CIRCUIT BREAKER AS INDICATED). MAGNETIC STARTER, NEMA SIZE INDICATED, NEMA 12 ENCLOSURE UNLESS INDICATED OTHERWISE. SEE CONTROL SCHEMATIC DIAGRAM. 4X = NEMA 4X STAINLESS STEEL
	ELECTRIC RESISTANCE HEATER
ETM	ELAPSED TIME METER
CRX	CONTACT – NORMALLY OPEN WITH COIL INDICATED
CRX	CONTACT – NORMALLY CLOSED WITH COIL INDICATED
CRX	CONTROL RELAY, X=SEQUENTIAL NUMBER
LRX (L)	LATCHING RELAY, X=SEQUENTIAL NUMBER L – LATCH, U – UNLATCH
TDX NOTC	TIME DELAY RELAY, X=SEQUENTIAL NUMBER NOTC=NORMALLY OPEN TIMED CLOSED NOTO=NORMALLY OPEN TIMED OPEN AFTER CLOSE NCTO=NORMALLY CLOSED TIMED OPEN NCTC=NORMALLY CLOSED TIMED CLOSED AFTER OPEN
	TEMPERATURE
	OPENS ON RISING TEMPERATURE, CLOSES ON FALLING TEMPERATURE
	CLOSES ON RISING TEMPERATURE, OPENS ON FALLING TEMPERATURE
H O A XOO OOX	SELECTOR SWITCH: MAINTAINED CONTACT WITH CONTACT POSITION INDICATED, CHART IDENTIFIES OPERATION

POSITION			
CKT.	HAND	OFF	AUTO
1	X	O	O
2	O	O	X

X – CLOSED CONTACT
O – OPEN CONTACT

GENERAL

SYMBOL	DESCRIPTION
	CONNECTION POINT TO EQUIPMENT SPECIFIED, FURNISHED AND INSTALLED UNDER OTHER SECTIONS. RACEWAY, CONDUCTOR AND CONNECTION IN THIS SECTION.
1"C,2#12,1#12G 1"C,1-25/C TYPE 1	INDICATES RACEWAY AND CIRCUIT CONDUCTORS. FIRST NUMBER IS RACEWAY SIZE. THE FOLLOWING NUMBERS ARE THE CONDUCTOR QUANTITIES, SIZES, AND TYPES.
	DEMOLITION TO BE REMOVED OR DELETED

LINE WEIGHT

NEW — EXISTING — FUTURE

NOTE:
THIS IS A STANDARD LEGEND SHEET. SOME SYMBOLS OR ABBREVIATIONS MAY APPEAR ON THIS SHEET AND NOT BE UTILIZED ON PROJECT.

REQUEST FOR PROPOSAL

NO.	DATE	ISSUED FOR	BY
1	07/24/15	REQUEST FOR PROPOSAL	G.A.B.

DESIGNED J.M.B.
DRAWN A.B.C.
CHECKED J.C.B.
PROJ. ENGR. J.C.B.

JOHN C. BURKE P.E.
No. 17301

HAZEN AND SAWYER
Environmental Engineers & Scientists
4000 Hollywood Boulevard, Suite 750N
Hollywood, Florida 33021
Certificate of Authorization Number: 2771

SCALE NTS

CLIENTS PROJECT: –
ENGINEERS PROJECT: 44238-004
CAD REFERENCE: 44238-004BP3-E01

NORTH MIAMI FLORIDA
CITY OF NORTH MIAMI
PUBLIC WORKS UTILITIES

WINSON WATER TREATMENT PLANT
RELIABILITY IMPROVEMENTS – VOLUME C: WTP REHAB

ELECTRICAL LEGEND AND SYMBOLS

DATE: JULY 2015
SHEET: 240 OF 335
DRAWING: E-01

PLOT DATE: 7/24/2015 4:35 PM BY: TBOCAS
XREFs= ..\Tblock\44238-004-BP3-TB
File = H:\44238-004\Drawings\design build package\volume c - wtp rehab\Bid Package 3 - WTP Rehab\Electrical\44238-004BP3-E01 Saved by tbocas Save date = 5/18/2015 11:14 AM

GENERAL NOTES AND SPECIFICATIONS:

1. THE SCOPE OF WORK SHALL CONSIST PRIMARILY OF THE FOLLOWING:

1.1. PROVIDE AND INSTALL ALL ELECTRICAL SYSTEMS DESCRIBED IN THE DRAWINGS AND SPECIFICATIONS COMPLETE IN PLACE.
1.2. PROVIDE AND INSTALL ALL NEW WIRE AND CONDUIT NECESSARY TO COMPLETE ALL ELECTRICAL SYSTEMS COMPLETE IN PLACE.
1.3. PROVIDE AND INSTALL NEW LIGHTING AND RECEPTACLES.
1.4. PROVIDE AND INSTALL NEW TRANSFORMERS, LIGHTING PANELS, POWER DISTRIBUTION PANELS, DISCONNECTS, ETC. AS DESCRIBED IN THE DRAWINGS AND SPECIFICATIONS FOR A COMPLETE WORKING SYSTEM IN PLACE.
1.5. PROVIDE AND INSTALL ALL GROUNDING AS REQUIRED FOR A COMPLETE WORKING SYSTEM IN PLACE.

2. PROVIDE AND INSTALL ALL ELECTRICAL NECESSARY TO SUPPORT THE INSTRUMENTATION AND CONTROL DESIGN.

3. THE CONTRACTOR SHALL PROVIDE ALL MATERIALS AND LABOR TO INSTALL THE ELECTRICAL SYSTEMS AS INDICATED ON THE DRAWINGS. ITEMS NOT SHOWN BUT OBVIOUSLY NECESSARY FOR COMPLETION OF THE WORK SHALL BE INCLUDED.

4. THE INSTALLATION SHALL BE IN ACCORDANCE WITH THE NATIONAL ELECTRICAL CODE, NATIONAL ELECTRICAL SAFETY CODE, LOCAL CODES, CITY CODES AND FLORIDA BUILDING CODE.

5. THE CONTRACTOR SHALL OBTAIN ALL NECESSARY PERMITS, INSPECTIONS AND APPROVALS AND TO INCLUDE ALL FEES AS PART OF THE BID UNLESS OTHERWISE NOTED.

6. THE CONTRACTOR SHALL COORDINATE HIS WORK WITH THE ENGINEER AND OWNER.

7. THE CONTRACTOR SHALL, BEFORE SUBMITTING HIS BID, VISIT THE SITE OF THE PROJECT AND BECOME FAMILIAR WITH THE EXISTING CONDITIONS. NO ALLOWANCE WILL BE MADE FOR EXISTING CONDITIONS OR FAILURE OF THE CONTRACTOR TO OBSERVE THEM.

8. IT IS THE CONTRACTOR'S RESPONSIBILITY TO COORDINATE WITH ALL LOCAL UTILITIES, INCLUDING THE POWER AND TELEPHONE UTILITIES TO MEET ALL OF THEIR INSTALLATION REQUIREMENTS. ALL FEES, LABOR, EQUIPMENT OR MATERIALS NECESSARY TO MEET THESE REQUIREMENTS IS TO BE INCLUDED IN THE BID. THE CONTRACTOR SHALL OBTAIN, DELIVER AND INSTALL ALL CONDUITS, PULL-BOXES AND EQUIPMENT AS REQUIRED BY THE UTILITIES TO THEIR SPECIFICATIONS.

9. ALL EQUIPMENT AND MATERIAL SHALL BE UNUSED AND U.L. LISTED. ALL REFERENCES TO A PARTICULAR MANUFACTURER ARE GIVEN ON AN "APPROVED EQUAL" BASIS.

10. THE CONTRACTOR IS RESPONSIBLE TO TEST ALL SYSTEMS INSTALLED OR MODIFIED UNDER THIS PROJECT AND REPAIR OR REPLACE ALL DEFECTIVE WORK TO THE SATISFACTION OF THE ENGINEER AND OWNER.

11. ALL EQUIPMENT FURNISHED AND INSTALLED BY THE CONTRACTOR SHALL BE GUARANTEED AGAINST DEFECTS IN MATERIAL AND WORKMANSHIP FOR A PERIOD OF ONE YEAR FROM DATE OF ACCEPTANCE.

12. ALL CONDUCTORS SHALL BE COPPER. NO ALUMINUM ALLOWED UNLESS SPECIFICALLY INDICATED ON DRAWINGS.

13. SHOP DRAWINGS SHALL BE SUBMITTED FOR ALL ELECTRICAL & CONTROL EQUIPMENT AND MATERIAL.

14. ALL CONTROL PANELS SHALL BE CONSTRUCTED BY A UL-508A APPROVED PANEL VENDOR AND SHALL BEAR A UL-508A LABEL ON THE PANEL.

15. THE DRAWINGS ARE NOT INTENDED TO SHOW THE EXACT LOCATION OF CONDUIT RUNS. THESE ARE TO BE COORDINATED WITH THE OTHER TRADES SO THAT CONFLICTS ARE AVOIDED PRIOR TO INSTALLATIONS.

16. ALL LOCATIONS OF EQUIPMENT, PANELS ETC. ARE SHOWN FOR ILLUSTRATION PURPOSES. CONTRACTOR SHALL VERIFY AND COORDINATE EXACT LOCATION AND SIZE WITH ALL SUBCONTRACTORS AND EQUIPMENT SUPPLIERS PRIOR TO ANY INSTALLATION AND THEN INSTALL AS SUCH WITH CORRESPONDING CONDUIT STUB-UPS.

17. SEE OTHER DISCIPLINE DRAWINGS FOR COORDINATION OF ALL DRAWINGS. ANY CONFLICTS SHALL BE BROUGHT TO THE ENGINEER'S ATTENTION AND MOVEMENT OF CONDUITS OR OTHER ELECTRICAL EQUIPMENT SHALL BE ACCOMPLISHED WITHOUT ANY ADDITIONAL COST FOR THE OWNER.

18. LOCATIONS OF MANHOLES, HANDHOLES AND PULL BOXES ARE APPROXIMATE. CONTRACTOR SHALL COORDINATE EXACT LOCATION WITH EXISTING AND NEW PIPING OR CONDUIT AND ADJUST ACCORDINGLY.

19. NOT ALL CONDUITS SHOWN ON RISER AND ONE-LINE DIAGRAMS ARE SHOWN ON BUILDING LAYOUTS. CONTRACTOR SHALL SUPPLY ALL CONDUITS AND CABLES AS SHOWN ON RISER AND ONE-LINE DIAGRAMS.

20. ALL CIRCUITS SHALL BE IDENTIFIED IN JUNCTION BOXES, PULL BOXES, CONTROL PANELS, PANELBOARDS, LIGHTING POLES, CONTROLLERS AND SERVICE POINTS. IDENTIFICATION SHALL MATCH PANELBOARD SCHEDULES.

21. EXPOSED RUNS OF CONDUITS SHALL BE INSTALLED WITH RUNS PARALLEL OR PERPENDICULAR TO WALLS, STRUCTURAL MEMBERS OR INTERSECTIONS OF VERTICAL PLANES AND CEILINGS, WITH RIGHT ANGLE TURNS CONSISTING OF SYMMETRICAL BENDS OR PULL BOXES AS INDICATED ON THE DRAWINGS. BENDS AND OFFSETS SHALL BE AVOIDED WHERE POSSIBLE.

22. INSTRUMENTATION IS LOW VOLTAGE SIGNALS SUCH AS 4-20mA, TELEPHONE COMMUNICATION, FIRE ALARM COMMUNICATION. POWER CONDUIT SHALL ONLY CROSS OTHER CONDUITS PERPENDICULARLY AT RIGHT ANGLES WITH 6" SEPARATION.

23. CONDUCTOR PULLING TENSIONS SHALL NOT EXCEED MANUFACTURER'S RECOMMENDATION. CONTRACTOR SHALL INSTALL PULL BOXES TO MEET MANUFACTURER'S REQUIREMENTS.

24. MINIMUM DISTANCE ALLOWED BETWEEN POWER CONDUITS AND INSTRUMENTATION CONDUITS SHALL BE:

	VOLTAGE	DISTANCE
24.1.	4160V	3 FT
24.2.	480V	2 FT
24.3.	120V	1 FT

25. THE CONTRACTOR SHALL BE RESPONSIBLE FOR ALL CONDUIT AND WIRING INSTALLATION FOR ALL VENDOR PROVIDED EQUIPMENT (PACKAGE SYSTEMS). IF THE SHOP DRAWINGS DIFFER FROM THE DESIGNED FACILITIES, THE CONTRACTOR SHALL REDESIGN THE FACILITIES AND SUBMIT THE REVISED DESIGN FOR THE ENGINEER'S APPROVAL ALONG WITH THE SHOP DRAWINGS. THERE SHALL BE NO ADDITIONAL COST TO THE OWNER FOR THE REDESIGN NOR FOR ANY ADDITIONAL CONDUITS AND WIRING. DURING SUBMITTAL THE CONTRACTOR SHALL VERIFY ALL SUPPLIED BREAKER SIZES FOR ALL PACKAGED SYSTEMS SUCH AS HVAC, EXHAUST FANS, MIXERS, CHEMICAL PUMPS ETC. AND MODIFY ALL BREAKERS IN MCC'S AND PANELBOARDS ACCORDINGLY WITHOUT ANY ADDITIONAL COST TO THE OWNER.

26. ALL EXCAVATIONS FOR CONDUITS, HANDHOLES, MANHOLES AND PULLBOXES NEAR EXISTING PIPING, CONDUIT AND EQUIPMENT SHALL BE HAND EXCAVATED AND COORDINATED WITH PLANT ENGINEER.

27. MINIMUM DEPTH FROM TOP OF DUCTBANKS OR CONDUITS TO FINISHED GRADE SHALL BE 24" UNLESS OTHERWISE NOTED.

28. COLORED WARNING TAPE 6" WIDE SHALL BE INSTALLED 8" BELOW FINISHED GRADE DIRECTLY ABOVE ALL UNDERGROUND YARD CONDUITS ACCORDING TO THE FOLLOWING SCHEDULE:
28.1. POWER: RED
28.2. ALL OTHER CONDUITS: GREEN

29. CONTRACTOR SHALL RESTORE SIDEWALKS, ROADWAYS, SOD AND SPRINKLER SYSTEM PIPING TO MATCH EXISTING, AFTER THE COMPLETION OF THE CONDUITS AND PULLBOXES INSTALLATION.

30. GROUNDING SHALL BE INSTALLED IN ACCORDANCE WITH NEC, ARTICLE 250. THE GROUNDING SYSTEM TEST SHALL NOT EXCEED A 48 HOUR SPAN DRY RESISTANCE OF 10 OHMS. ADDITIONAL GROUNDING TO MEET THIS REQUIREMENT SHALL BE INSTALLED AT NO EXTRA COST. GROUNDING AND BONDING CONNECTIONS SHALL NOT BE PAINTED. ALL GROUNDING CONNECTIONS SHALL BE EXOTHERMIC UNLESS SPECIFICALLY INDICATED OTHERWISE.

31. AN EQUIPMENT GROUND WIRE SIZED PER NEC SHALL BE PULLED IN ALL ELECTRICAL CONDUITS, POWER AND CONTROL, WHETHER OR NOT INDICATED ON THE PLANS.

32. ALL ENCLOSURES, TJB, WIREWAY, PULL BOXES ETC. SHALL CONTAIN A GROUNDING BUS. CONNECT ALL RACEWAY BONDS TO THIS BUS VIA GROUNDING BUSHING AND EXTEND BONDING JUMPER FROM THIS BUS TO THE ENCLOSURE.

33. PRIMARY BUILDING GROUNDING SHALL BE AN EMBEDDED GRID OF MINIMUM #4/0 AWG WIRE INSTALLED IN THE FOUNDATION AND AROUND THE BUILDING PERIMETER TO FORM A COMPLETE LOOP. SECONDARY GROUND CONNECTIONS TO ALL METAL EQUIPMENT, HAND RAILS, STRUCTURAL STEEL, CONCRETE PADS, REBAR ETC. SHALL HAVE A MINIMUM #4 STRANDED COPPER CONDUCTOR BONDED USING APPROVED LUGS OR EXOTHERMIC CONNECTIONS. ALL EQUIPMENT GROUNDING CONDUCTORS PENETRATING CONCRETE SLABS OR FINISHED GRADE SHALL HAVE A 72" CONDUCTOR PIGTAIL AT EACH LOCATION FOR CONNECTION TO EQUIPMENT.

34. GROUND SURROUNDING YARD FENCE AND ALL YARD LIGHTING FIXTURES WITH MINIMUM #4 STRANDED COPPER CONDUCTORS BELOW GRADE TO SITE GROUNDING GRID PER NFPA 54/70.

35. ALL CONCRETE ENCASED DUCTBANKS SHALL CARRY A MINIMUM #4/0 AWG BARE COPPER GROUND WIRE, OVER THE ENTIRE LENGTH, WHICH SHALL BE CONNECTED TO THE SITE GROUNDING GRID AND GROUND RODS LOCATED CONNECTING MANHOLES, HANDHOLES OR PULL BOXES.

36. CONTRACTOR SHALL CORE DRILL EXISTING CONCRETE WALLS, FLOORS, MANHOLES, HANDHOLES AND PULL BOXES FOR CONDUIT PENETRATIONS. SEAL PENETRATIONS WITH NON-SHRINK GROUT OR APPROPRIATE FIRE RATED DEVICES WHERE APPLICABLE.

37. ALL CONDUITS PENETRATING RATED FIRE WALLS OR RATED FIRE FLOORS SHALL BE INSTALLED WITH U.L. APPROVED DEVICES TO MAINTAIN THE FIRE RATING OF THE WALL OR FLOOR PENETRATED.

38. PROVIDE CONDUIT DUCT SEAL AT ALL CONDUIT ENDS.

39. ALL SPARE CONDUITS SHALL BE SEALED WITH A CAP OF SAME MATERIAL AT BOTH ENDS AND A PULL STRING INSTALLED WITH IDENTIFICATION ON BOTH ENDS.

40. ALL RECEPTACLES SHALL BE INSTALLED 18" AFF UNLESS OTHERWISE NOTED. LIGHT SWITCHES SHALL BE MOUNTED 48" AFF UNLESS OTHERWISE NOTED.

41. ALL RECEPTACLES WITHIN 6 FEET OF A SINK SHALL BE GFI.

42. FLEXIBLE CONDUITS SHALL BE USED TO TERMINATE ALL MOTORS AND OTHER VIBRATING EQUIPMENT AND SHALL BE BETWEEN 18" AND 3' IN LENGTH.

43. ELECTRICAL PULL BOXES SHALL BE SUPPLIED WITH PVC JUNCTION BOXES AND A STEEL TRAFFIC-RATED COVER MARKED "ELECTRICAL" OR "SIGNAL".

44. TYPEWRITTEN PANEL SCHEDULES SHALL BE INSTALLED IN EACH PANELBOARD, AND TYPEWRITTEN TERMINAL BLOCK SCHEDULES IN EACH CONTROL CABINET.

45. ALL SPDs SHALL BE INTEGRAL TO THE NEW EQUIPMENT SHOWN AND SUPPLIED AS ONE UNIT AND ONE U.L. ENTITY.

46. AS PART OF THE ELECTRICAL SUBMITTAL, CONTRACTOR SHALL PROVIDE A LAYOUT OF THE ELECTRICAL ROOM SHOWING SIZES OF ALL EQUIPMENT AND THEIR SPATIAL RELATIONSHIPS.

47. BRANCH CIRCUITS EXCEEDING 100 FT IN LENGTH SHALL BE WIRED WITH MINIMUM #10 AWG WIRES.

48. ALL ELECTRICAL EQUIPMENT SUPPORTS AN OTHER MATERIAL IN DESIGNATED WET AREAS SHALL BE NEMA 4X 316 STAINLESS STEEL OR NON-METALLIC.

49. ALL OUTDOOR LIGHTING FIXTURES SHALL BE OF COPPER FREE CONSTRUCTION.

50. CONTRACTOR SHALL BALANCE PANELBOARD LOADS AT THE END OF THE PROJECT.

51. WHEN NOTED AS STAINLESS STEEL OR S.S. IT SHALL MEAN 316 STAINLESS STEEL.

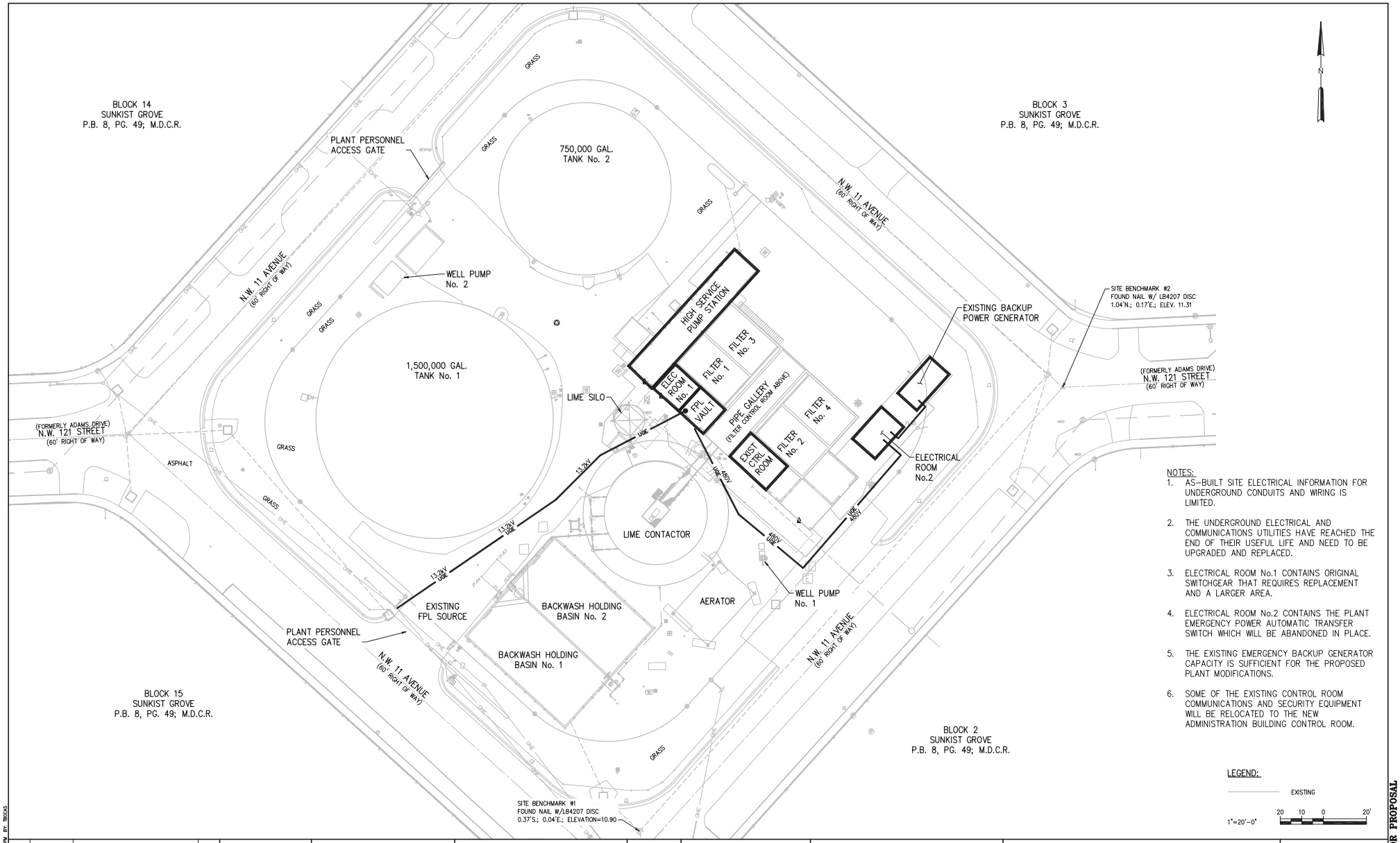

NOTES:

1. AS-BUILT SITE ELECTRICAL INFORMATION FOR UNDERGROUND CONDUITS AND WIRING IS LIMITED.
2. THE UNDERGROUND ELECTRICAL AND COMMUNICATIONS UTILITIES HAVE REACHED THE END OF THEIR USEFUL LIFE AND NEED TO BE UPGRADED AND REPLACED.
3. ELECTRICAL ROOM No.1 CONTAINS ORIGINAL SWITCHGEAR THAT REQUIRES REPLACEMENT AND A LARGER AREA.
4. ELECTRICAL ROOM No.2 CONTAINS THE PLANT EMERGENCY POWER AUTOMATIC TRANSFER SWITCH WHICH WILL BE ABANDONED IN PLACE.
5. THE EXISTING EMERGENCY BACKUP GENERATOR CAPACITY IS SUFFICIENT FOR THE PROPOSED PLANT MODIFICATIONS.
6. SOME OF THE EXISTING CONTROL ROOM COMMUNICATIONS AND SECURITY EQUIPMENT WILL BE RELOCATED TO THE NEW ADMINISTRATION BUILDING CONTROL ROOM.

LEGEND:

EXISTING

1"=20'-0" 20 10 0 20'

NO.	DATE	ISSUED FOR	BY
1	07/24/15	REQUEST FOR PROPOSAL	G.A.B.

DESIGNED J.M.B.
DRAWN A.B.C.
CHECKED J.C.B.
PROJ. ENGR. J.C.B.

JOHN C. BURKE P.E.
No. 17301

HAZEN AND SAWYER
Environmental Engineers & Scientists
4000 Hollywood Boulevard, Suite 750N
Hollywood, Florida 33021
Certificate of Authorization Number: 2771

SCALE 1"=20'-0"

CLIENTS PROJECT: –
ENGINEERS PROJECT: 44238-004
CAD REFERENCE: 44238-004BP3-E03

CITY OF NORTH MIAMI
PUBLIC WORKS UTILITIES

WINSON WATER TREATMENT PLANT
RELIABILITY IMPROVEMENTS – VOLUME C: WTP REHAB

ELECTRICAL SITE PLAN
EXISTING

DATE: JULY 2015
SHEET: 242 OF 335
DRAWING: E-03

REQUEST FOR PROPOSAL

PLOT DATE: 7/24/2015 4:35 PM BY: TBOCAS
XREFs= ..\Base-BP3\C-Site-Survey-X,..\Tblock\44238-004-BP3-TB
File = H:\44238-004\Drawings\design build package\volume c - wtp rehab\Bid Package 3 - WTP Rehab\Electrical\44238-004BP3-E03 Saved by jbroad Save date = 12/24/2013 11:43 AM

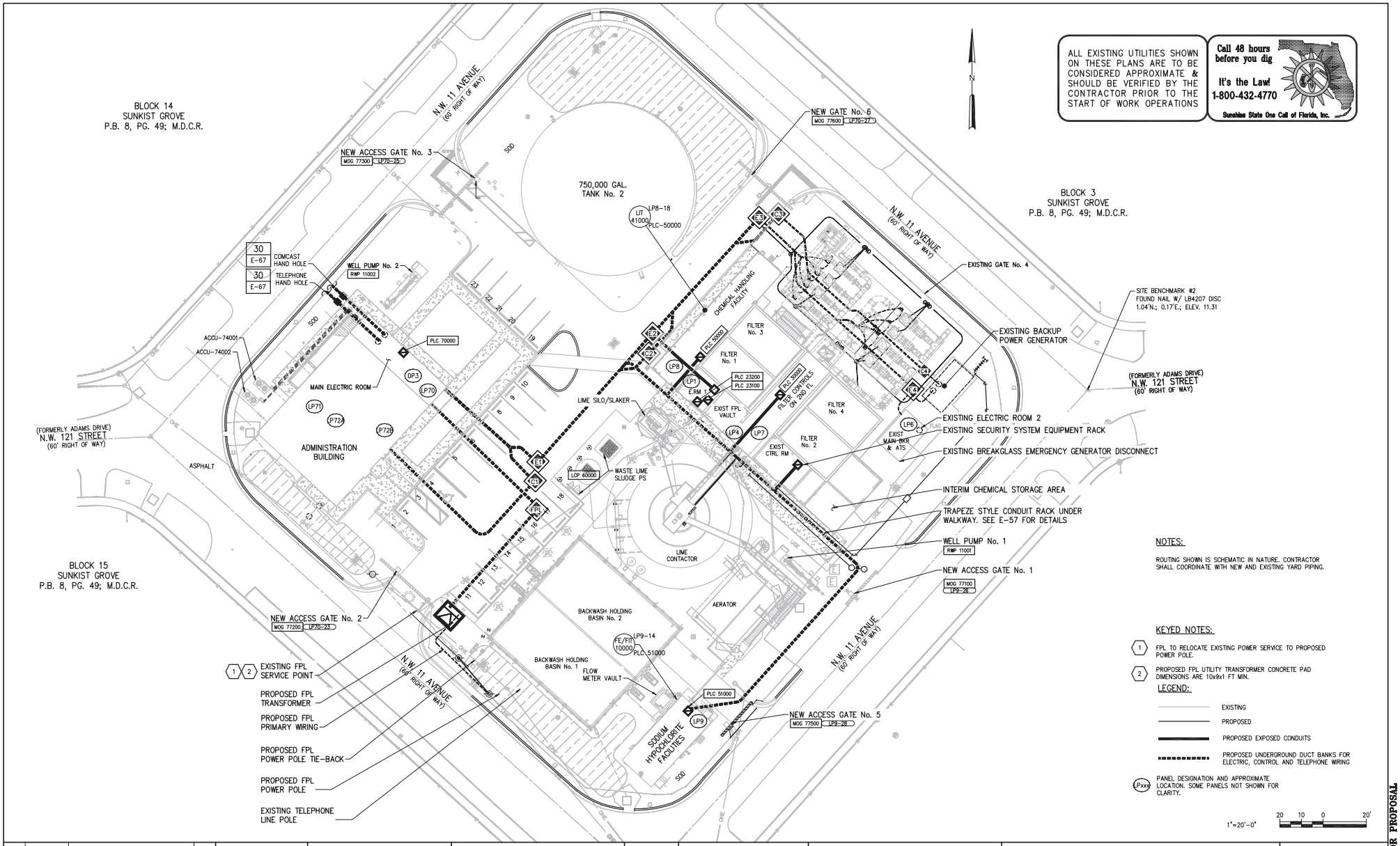

NO.	DATE	ISSUED FOR	BY
1	07/24/15	REQUEST FOR PROPOSAL	G.A.B.

DESIGNED J.M.B.
DRAWN J.M.B.
CHECKED J.C.B.
PROJ. ENGR. J.C.B.

JOHN C. BURKE P.E.
No. 17301

HAZEN AND SAWYER
Environmental Engineers & Scientists
4000 Hollywood Boulevard, Suite 750N
Hollywood, Florida 33021
Certificate of Authorization Number: 2771

SCALE 1"=20'-0"

CLIENTS PROJECT: –
ENGINEERS PROJECT: 44238-004
CAD REFERENCE: 44238-004BP3-E04

NORTH MIAMI FLORIDA
CITY OF NORTH MIAMI
PUBLIC WORKS UTILITIES

WINSON WATER TREATMENT PLANT
RELIABILITY IMPROVEMENTS – VOLUME C: WTP REHAB

ELECTRICAL SITE PLAN
PROPOSED

DATE: JULY 2015
SHEET: 243 OF 335
DRAWING: E-04

REQUEST FOR PROPOSAL

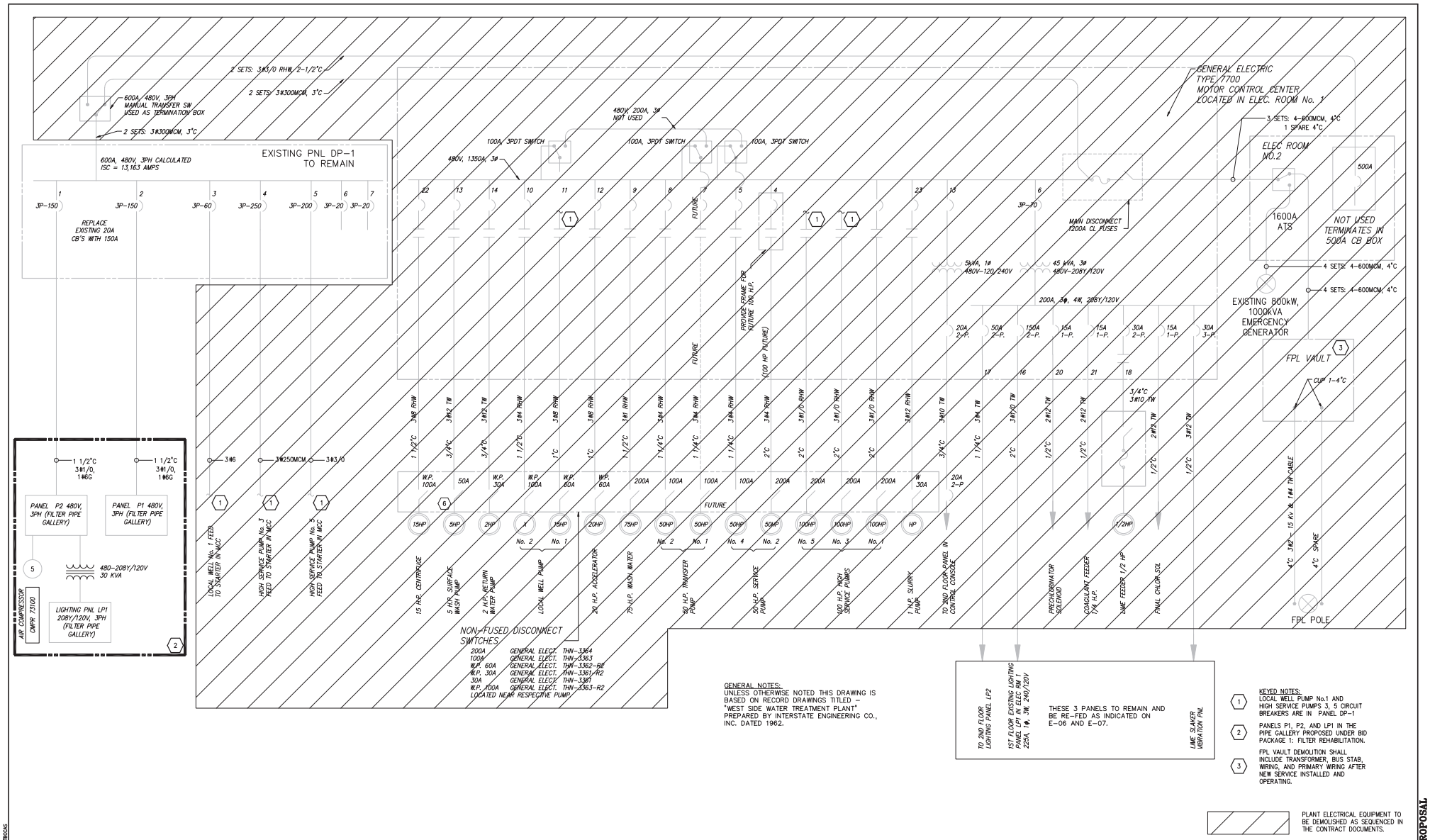

GENERAL NOTES:
UNLESS OTHERWISE NOTED THIS DRAWING IS BASED ON RECORD DRAWINGS TITLED - "WEST SIDE WATER TREATMENT PLANT" PREPARED BY INTERSTATE ENGINEERING CO., INC. DATED 1962.

KEYED NOTES:

1. LOCAL WELL PUMP No.1 AND HIGH SERVICE PUMPS 3, 5 CIRCUIT BREAKERS ARE IN PANEL DP-1
2. PANELS P1, P2, AND LP1 IN THE PIPE GALLERY PROPOSED UNDER BID PACKAGE 1: FILTER REHABILITATION.
3. FPL VAULT DEMOLITION SHALL INCLUDE TRANSFORMER, BUS STAB, WIRING, AND PRIMARY WIRING AFTER NEW SERVICE INSTALLED AND OPERATING.

PLANT ELECTRICAL EQUIPMENT TO BE DEMOLISHED AS SEQUENCED IN THE CONTRACT DOCUMENTS.

NO.	DATE	ISSUED FOR	BY
1	07/24/15	REQUEST FOR PROPOSAL	G.A.B.

DESIGNED J.M.B.
DRAWN G.B.P.
CHECKED J.C.B.
PROJ. ENGR. J.C.B.

JOHN C. BURKE P.E.
No. 17301

HAZEN AND SAWYER
Environmental Engineers & Scientists
4000 Hollywood Boulevard, Suite 750N
Hollywood, Florida 33021
Certificate of Authorization Number: 2771

SCALE –

CLIENTS PROJECT: –
ENGINEERS PROJECT: 44238-004
CAD REFERENCE: 44238-004BP3-E05

NORTH MIAMI FLORIDA
CITY OF NORTH MIAMI
PUBLIC WORKS UTILITIES

WINSON WATER TREATMENT PLANT
RELIABILITY IMPROVEMENTS – VOLUME C: WTP REHAB

EXISTING FACILITY SINGLE
LINE DIAGRAM

DATE: JULY 2015
SHEET: 244 OF 335
DRAWING: E-05

REQUEST FOR PROPOSAL

PLOT DATE: 7/24/2015 4:35 PM BY: TBOAS
XREFs= ..\Tblock\44238-004-BP3-TB
File = H:\44238-004\Drawings\design build package\volume c - wtp rehab\Bid Package 3 - WTP Rehab\Electrical\44238-004BP3-E05 Saved by jbroad Save date = 12/24/2013 11:43 AM

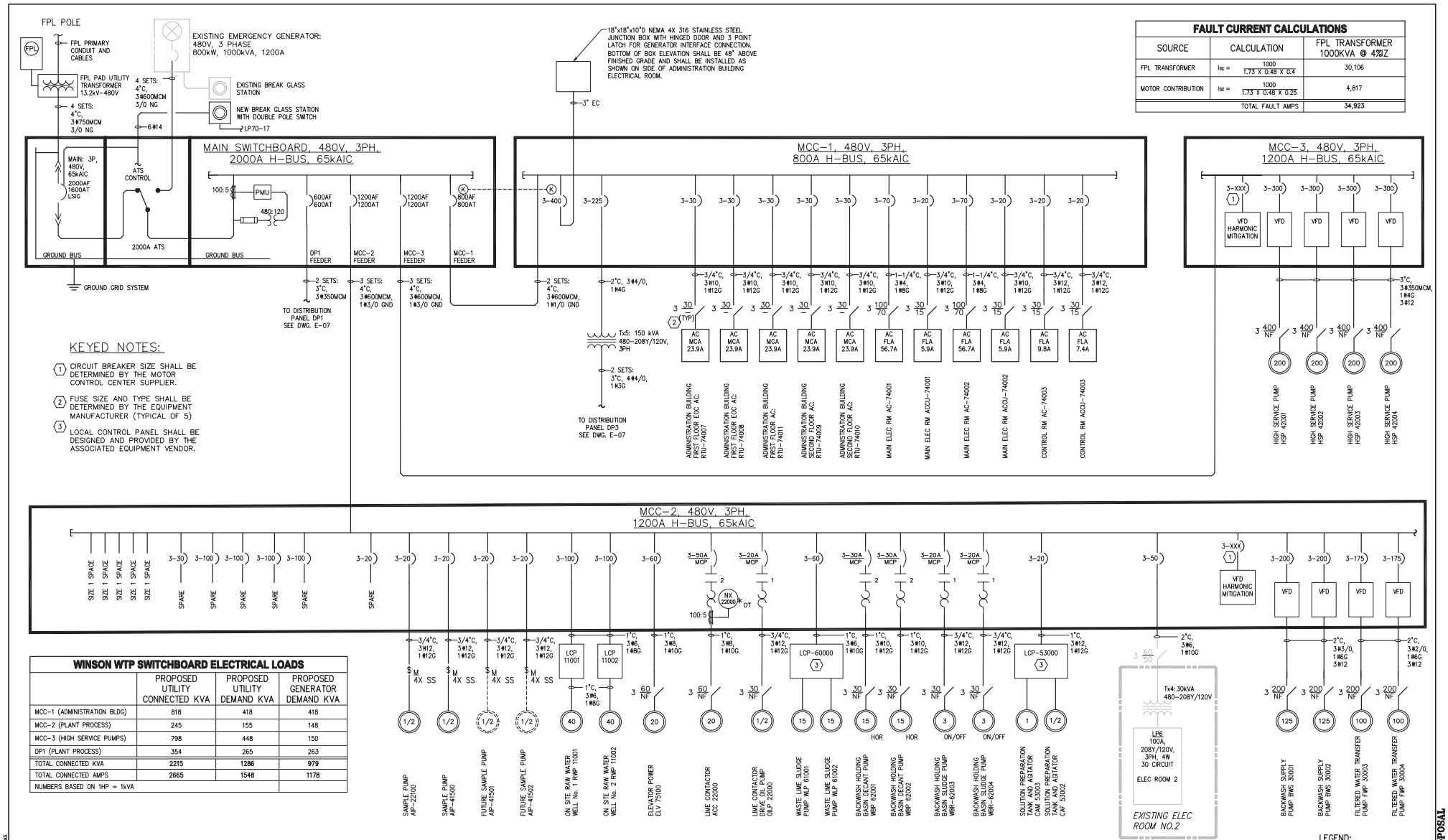

KEYED NOTES:

1. CIRCUIT BREAKER SIZE SHALL BE DETERMINED BY THE MOTOR CONTROL CENTER SUPPLIER.
2. FUSE SIZE AND TYPE SHALL BE DETERMINED BY THE EQUIPMENT MANUFACTURER (TYPICAL OF 5)
3. LOCAL CONTROL PANEL SHALL BE DESIGNED AND PROVIDED BY THE ASSOCIATED EQUIPMENT VENDOR.

FAULT CURRENT CALCULATIONS

SOURCE	CALCULATION	FPL TRANSFORMER 1000KVA @ 4%Z
FPL TRANSFORMER	Isc = 1000 / 1.73 X 0.48 X 0.4	30,106
MOTOR CONTRIBUTION	Isc = 1000 / 1.73 X 0.48 X 0.25	4,817
	TOTAL FAULT AMPS	34,923

WINSON WTP SWITCHBOARD ELECTRICAL LOADS

	PROPOSED UTILITY CONNECTED KVA	PROPOSED UTILITY DEMAND KVA	PROPOSED GENERATOR DEMAND KVA
MCC-1 (ADMINISTRATION BLDG)	818	418	418
MCC-2 (PLANT PROCESS)	245	155	148
MCC-3 (HIGH SERVICE PUMPS)	798	448	150
DP1 (PLANT PROCESS)	354	265	263
TOTAL CONNECTED KVA	2215	1286	979
TOTAL CONNECTED AMPS	2665	1548	1178
NUMBERS BASED ON 1HP = 1kVA			

NO.	DATE	ISSUED FOR	BY
1	07/24/15	REQUEST FOR PROPOSAL	G.A.B.

DESIGNED J.M.B.
DRAWN J.M.B.
CHECKED J.C.B.
PROJ. ENGR. J.C.B.

JOHN C. BURKE P.E.
No. 17301

HAZEN AND SAWYER
Environmental Engineers & Scientists
4000 Hollywood Boulevard, Suite 750N
Hollywood, Florida 33021
Certificate of Authorization Number: 2771

SCALE: NTS

CLIENTS PROJECT: –
ENGINEERS PROJECT: 44238-004
CAD REFERENCE: 44238-004BP3-E06

NORTH MIAMI FLORIDA
CITY OF NORTH MIAMI
PUBLIC WORKS UTILITIES

WINSON WATER TREATMENT PLANT
RELIABILITY IMPROVEMENTS – VOLUME C: WTP REHAB

PROPOSED FACILITY SINGLE LINE DIAGRAM
SHEET 1 OF 2

DATE: JULY 2015
SHEET: 245 OF 335
DRAWING: E-06

REQUEST FOR PROPOSAL

PLOT DATE: 7/24/2015 4:35 PM BY: TBOCAS
XREFs= ..\Tblock\44238-004-BP3-TB
File = H:\44238-004\Drawings\design build package\volume c - wtp rehab\Bid Package 3 - WTP Rehab\Electrical\44238-004BP3-E06 Saved by tbocas Save date = 5/18/2015 11:14 AM

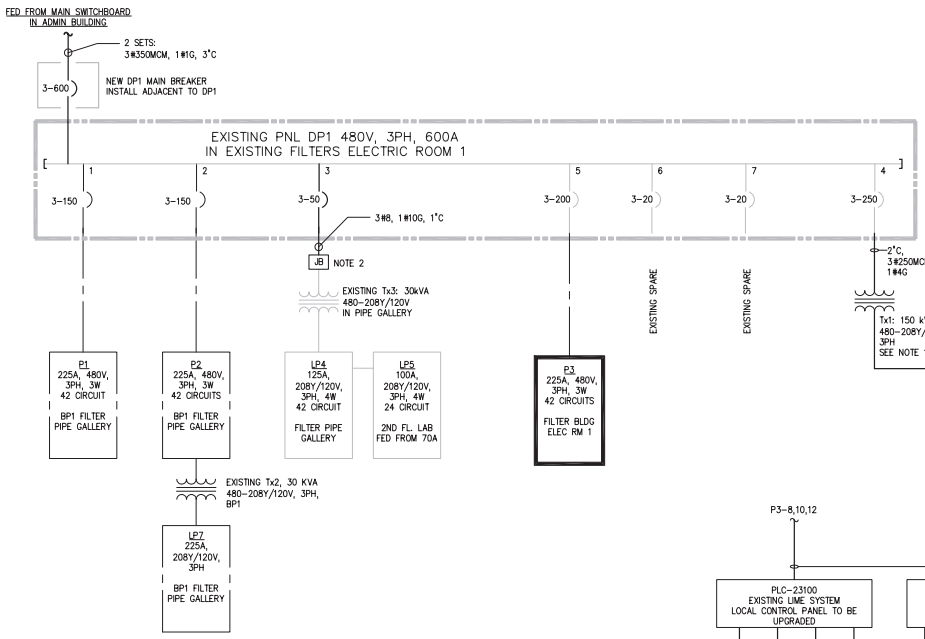

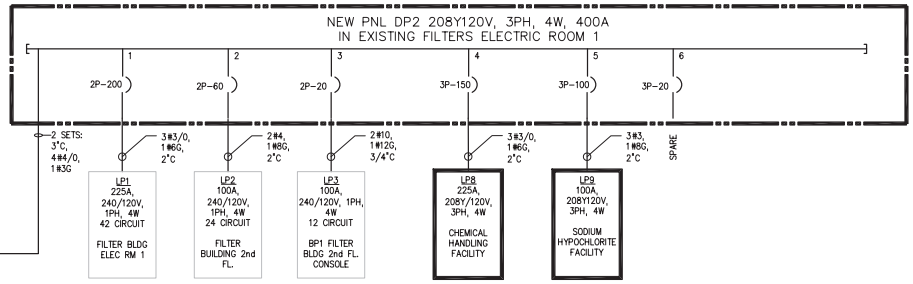

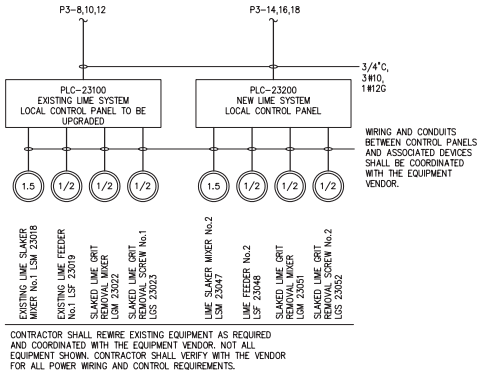

CONTRACTOR SHALL REWIRE EXISTING EQUIPMENT AS REQUIRED AND COORDINATED WITH THE EQUIPMENT VENDOR. NOT ALL EQUIPMENT SHOWN. CONTRACTOR SHALL VERIFY WITH THE VENDOR FOR ALL POWER WIRING AND CONTROL REQUIREMENTS.

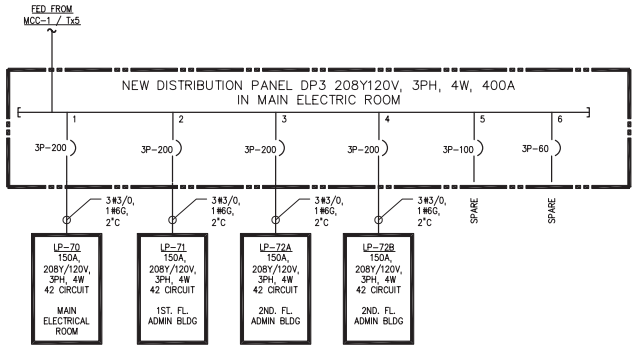

ADMINISTRATION BUILDING PANELBOARDS

PANELBOARD SCHEDULE

ID TAG	FED FROM	DESCRIPTION	VOLTS	PHASE	AMPS	CIRCUITS
DP1	MAIN SWBD	EXISTING IN FILTER BUILDING 1ST FLOOR ELEC RM 1	480	3	600	30
LP4	DP1 / Tx3	EXISTING IN FILTER BUILDING PIPE GALLERY	208Y120	3	125	42
LP5	LP4	EXISTING IN FILTER BUILDING 2ND FLOOR LAB	240/120	1	70	24
P1	DP1	EXISTING (BP1) IN FILTER BUILDING PIPE GALLERY	480	3	150	42
P2	DP1	EXISTING (BP1) IN FILTER BUILDING PIPE GALLERY	480	3	150	42
LP7	P2	EXISTING (BP1) IN FILTER BUILDING PIPE GALLERY	208Y120	3	100	42
P3	DP1	FILTER BUILDING ELEC RM 1	480	3	225	42
DP2	DP1 / Tx1	208Y/120V, 3PH, 4W DISTRIBUTION PANEL	208Y120	3	400	24
LP1	DP2	EXISTING IN FILTER BUILDING 1ST FLOOR ELEC RM 1	240/120	1	150	42
LP2	DP2	EXISTING IN FILTER BUILDING 2ND FLOOR CONT. RM	240/120	1	50	24
LP3	DP2	EXISTING IN FILTER BUILDING 2ND FLOOR CONSOLE	240/120	1	20	12
LP8	DP2	FILTER BUILDING CHEMICAL HANDLING FACILITY	208Y120	3	150	42
LP9	DP2	SODIUM HYPOCHLORITE FACILITY	208Y120	3	100	30
DP3	MCC-1	208Y/120V, 3PH, 4W DISTRIBUTION PANEL	208Y120	3	400	24
LP70	DP3	ADMIN BLDG, MAIN ELEC ROOM	208Y120	3	225	42
LP71	DP3	ADMIN BLDG, FIRST FLOOR ELECTRICAL LOADS	208Y120	3	225	42
LP72A	DP3	ADMIN BLDG, SECOND FLOOR ELECTRICAL LOADS	208Y120	3	225	42
LP72B	DP3	ADMIN BLDG, SECOND FLOOR CONTROL RM AND LAB	208Y120	3	225	42
LP6	MCC-2 / Tx4	EXISTING ELECTRIC ROOM 2	208Y120	3	100	30

DRY TYPE TRANSFORMER SCHEDULE

ID	RATING	FED FROM	LOAD	PROJECT
Tx1 NEW	150 kVA, 480-208Y/120V, 3PH	PANEL DP1	DISTRIBUTION PANEL DP2	BP3
Tx2 EXIST	30 kVA, 480-208Y/120V, 3PH	PANEL P2	PANEL LP7	BP3
Tx3 EXIST	30 kVA, 480-240/120V, 3PH	PANEL DP1	PANELS LP4	EXISTING
Tx4 EXIST	30 kVA, 480-240/120V, 3PH	MCC-2	PANEL LP6	EXISTING TO BE RE-FED
Tx5 NEW	150 kVA, 480-208Y/120V, 3PH	MCC-1	DISTRIBUTION PANEL DP3	BP3

NOTES:

1. REPLACE EXISTING TRANSFORMER LOCATED WITHIN THE EXISTING SWITCHGEAR WITH NEW EXTERNAL TRANSFORMER
2. BREAK EXISTING FEED IN ELECTRIC ROOM 1, PROVIDE AND INSTALL A NEW J-BOX, CONDUIT, AND WIRING TO DP1.

LEGEND:

—— – —— INSTALLED IN BP1

NO.	DATE	ISSUED FOR	BY
1	07/24/15	REQUEST FOR PROPOSAL	G.A.B.

DESIGNED J.M.B.
DRAWN L.M.S.
CHECKED J.C.B.
PROJ. ENGR. J.C.B.

JOHN C. BURKE P.E. No. 17301

HAZEN AND SAWYER
Environmental Engineers & Scientists
4000 Hollywood Boulevard, Suite 750N
Hollywood, Florida 33021
Certificate of Authorization Number: 2771

SCALE NTS

CLIENTS PROJECT: –
ENGINEERS PROJECT: 44238-004
CAD REFERENCE: 44238-004BP3-E07

NORTH MIAMI FLORIDA
CITY OF NORTH MIAMI
PUBLIC WORKS UTILITIES

WINSON WATER TREATMENT PLANT
RELIABILITY IMPROVEMENTS – VOLUME C: WTP REHAB

PROPOSED FACILITY SINGLE LINE DIAGRAM
SHEET 2 OF 2

DATE: JULY 2015
SHEET: 246 OF 335
DRAWING: E-07

REQUEST FOR PROPOSAL

PLOT DATE: 7/24/2015 4:35 PM BY: TBOCAS
XREFs= ..\Tblock\44238-004-BP3-TB
File = H:\44238-004\Drawings\design build package\volume c - wtp rehab\Bid Package 3 - WTP Rehab\Electrical\44238-004BP3-E07 Saved by tbocas Save date = 5/18/2015 11:14 AM

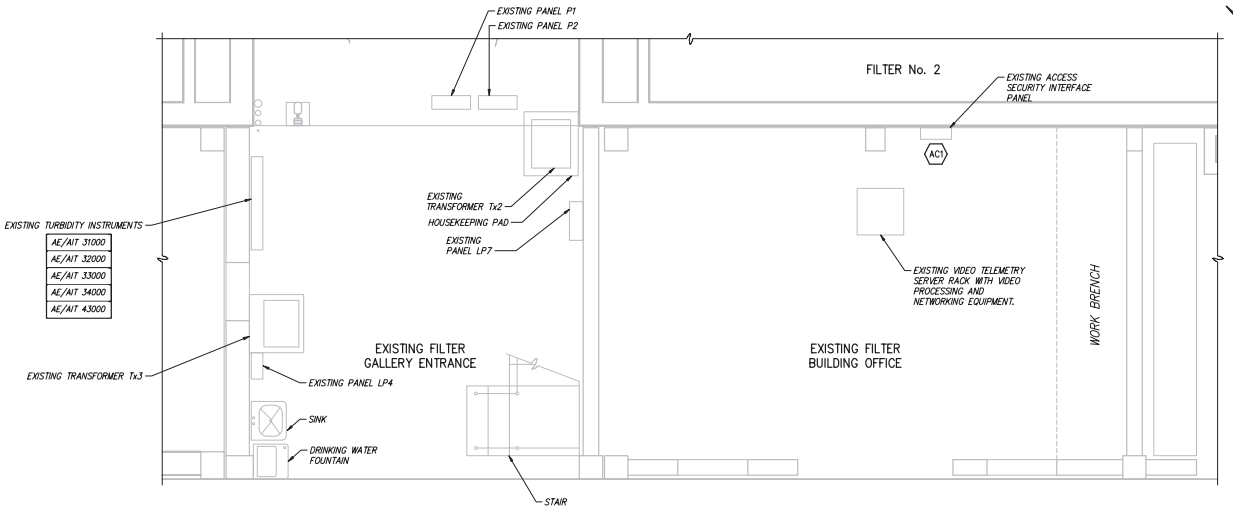

EXISTING CONDITION
3/8" = 1'-0"

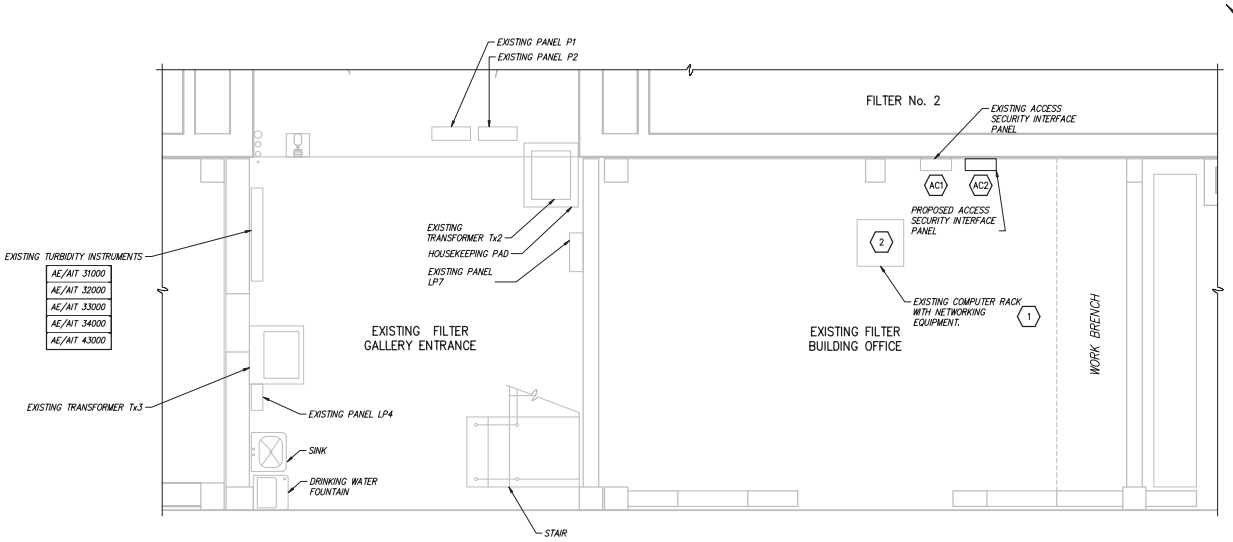

PROPOSED CONDITION
3/8" = 1'-0"

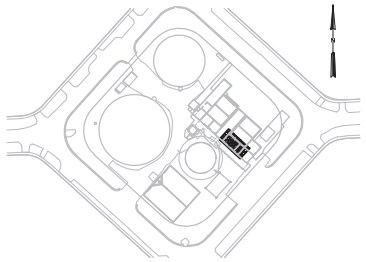

LOCATION MAP

KEYED NOTES:

1. SECURITY SYSTEM SUPPLIER TO MODIFY EQUIPMENT AS NEEDED TO INTERFACE WITH NEW SECURITY EQUIPMENT TO BE LOCATED IN THE PROPOSED ADMINISTRATION BUILDING.
2. CONTRACTOR SHALL PROVIDE AND INSTALL A 2 INCH MINIMUM RACEWAY AND FIBER OPTIC CABLE BETWEEN THIS EXISTING COMPUTER RACK AND THE NEW VIDEO EQUIPMENT COMPUTER RACK IN THE SECOND FLOOR CONTROL ROOM AT THE NEW ADMINISTRATION BUILDING.

LEGEND:

- AC1 EXISTING ACCESS CONTROL EQUIPMENT
- AC2 NEW ACCESS CONTROL EQUIPMENT IN EXISTING FILTER BUILDING

3/8"=1'-0" 12" 0 1 2 4'

REQUEST FOR PROPOSAL

NO.	DATE	ISSUED FOR	BY
1	07/24/15	REQUEST FOR PROPOSAL	G.A.B.

DESIGNED J.M.B.
DRAWN G.P.B.
CHECKED J.C.B.
PROJ. ENGR. J.C.B.

JOHN C. BURKE P.E.
No. 17301

HAZEN AND SAWYER
Environmental Engineers & Scientists
4000 Hollywood Boulevard, Suite 750N
Hollywood, Florida 33021
Certificate of Authorization Number: 2771

SCALE 3/8"=1'-0"

CLIENTS PROJECT: –
ENGINEERS PROJECT: 44238-004
CAD REFERENCE: 44238-004BP3-E08

NORTH MIAMI FLORIDA
CITY OF NORTH MIAMI
PUBLIC WORKS UTILITIES

WINSON WATER TREATMENT PLANT
RELIABILITY IMPROVEMENTS – VOLUME C: WTP REHAB

EXISTING FILTER BUILDING
FIRST FLOOR ELECTRICAL PLAN

DATE: JULY 2015
SHEET: 247 OF 335
DRAWING: E-08

PLOT DATE: 7/24/2015 4:35 PM BY: TBOCAS

XREFs= ..\Tblock\44238-004-BP3-TB,..\Base-BP3\S-BP1-Filters-Plan-Bottom-X,..\Base-BP3\M-BP1-Filters-Plan-Bottom-X

File = H:\44238-004\Drawings\design build package\volume c - wtp rehab\Bid Package 3 - WTP Rehab\Electrical\44238-004BP3-E08 Saved by HScalll Save date = 6/6/2014 5:28 PM

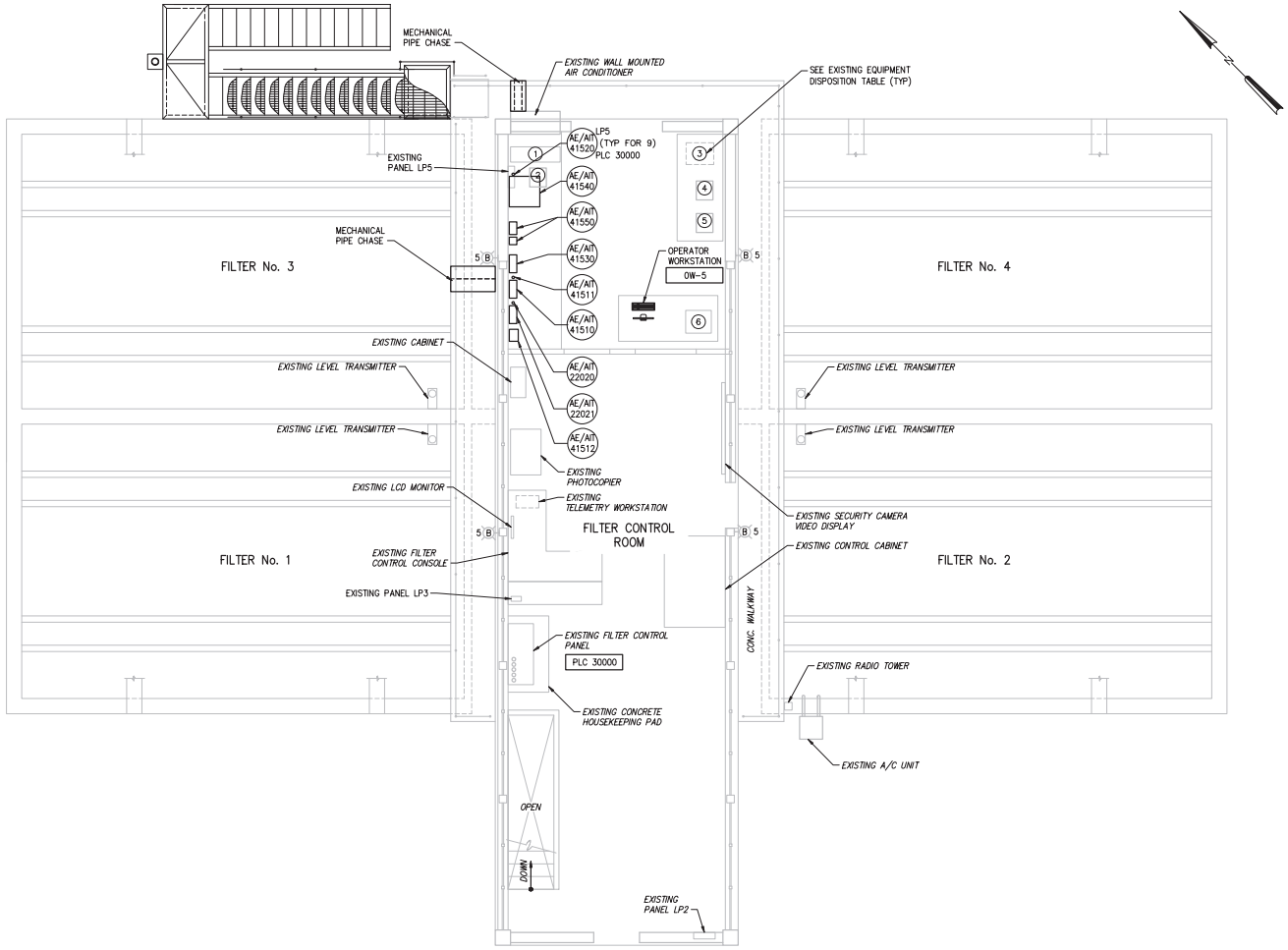

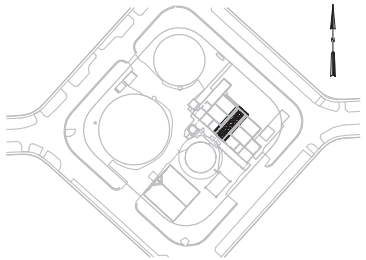

LOCATION MAP

INSTRUMENTATION POWER CIRCUITS		
ID	EQUIP DESCRIPTION	CIRCUIT
AE/AIT 41510	HSPS SUPPLY FREE CHLORINE ANALYZER	LP5–1
AE/AIT 41511	HSPS SUPPLY PH ANALYZER	LP5–7
AE/AIT 41512	HSPS SUPPLY FLUORIDE ANALYZER	LP5–9
AE/AIT 41520	HSPS DISCHARGE PH ANALYZER	LP5–11
AE/AIT 41530	HSPS DISCHARGE TOTAL CHLORINE ANALYZER	LP5–19
AE/AIT 41540	HSPS DISCHARGE CHLORAMINE ANALYZER	LP5–21
AE/AIT 41550	HSPS DISCHARGE TOTAL TURBIDITY ANALYZER	LP5–23
AE/AIT 22020	LIME CONTACTOR EFFLUENT PH ANALYZER	LP5–20
AE/AIT 22021	LIME CONTACTOR EFFLUENT FREE CHLORINE ANALYZER	LP5–21

EXISTING EQUIPMENT DISPOSITION		
ID	EQUIPMENT	DISPOSITION
1	AUTOCLAVE	RELOCATE TO NEW LAB
2	COLOR ANALYZER	RELOCATE TO NEW LAB
3	UNDER-COUNTER REFRIGATOR	RELOCATE TO NEW LAB
4	SPECTROPHOTOMETER	RELOCATE TO NEW LAB
5	TURBIDIMETER	RELOCATE TO NEW LAB
6	INCUBATOR	RELOCATE TO NEW LAB

GENERAL NOTES:

1. EXISTING ELECTRICAL EQUIPMENT WITHIN THE FILTER CONTROL ROOM ARE BASED UPON FIELD OBSERVATION.

LEGEND:

EXISTING

PROPOSED

TO BE REMOVED

1/4"=1'-0"

NO.	DATE	ISSUED FOR	BY
1	07/24/15	REQUEST FOR PROPOSAL	G.A.B.

DESIGNED J.M.B.
DRAWN L.M.S.
CHECKED J.C.B.
PROJ. ENGR. J.C.B.

JOHN C. BURKE P.E.
No. 17301

HAZEN AND SAWYER
Environmental Engineers & Scientists
4000 Hollywood Boulevard, Suite 750N
Hollywood, Florida 33021
Certificate of Authorization Number: 2771

SCALE 1/4"=1'-0"

CLIENTS PROJECT: –
ENGINEERS PROJECT: 44238-004
CAD REFERENCE: 44238-004BP3-E09

CITY OF NORTH MIAMI
PUBLIC WORKS UTILITIES

WINSON WATER TREATMENT PLANT
RELIABILITY IMPROVEMENTS – VOLUME C: WTP REHAB

EXISTING FILTER CONTROL ROOM
ELECTRICAL PLAN

DATE: JULY 2015
SHEET: 248 OF 335
DRAWING: E-09

REQUEST FOR PROPOSAL

PLOT DATE: 7/24/2015 4:35 PM BY: TBOCAS

XREFs= ..\Base-BP3\S-BP1-Filters-Plan-Upper-X,..\Base-BP3\A-BP1-Filters-Plan-Upper-X,..\Base-BP3\S-BP1-Filters-Plan-Upper,..\Base-BP3\M-BP1-Filters-Plan-Upper-X,..\Tblock\44238-004-BP3-TB,..\Base-BP3\M-BP3-Filters-Plan-Top,..\Base-BP3\S-BP3-ChemHand-Plan

File = H:\44238-004\Drawings\design build package\volume c - wtp rehab\Bid Package 3 - WTP Rehab\Electrical\44238-004BP3-E09 Saved by tbocas Save date = 5/18/2015 11:14 AM

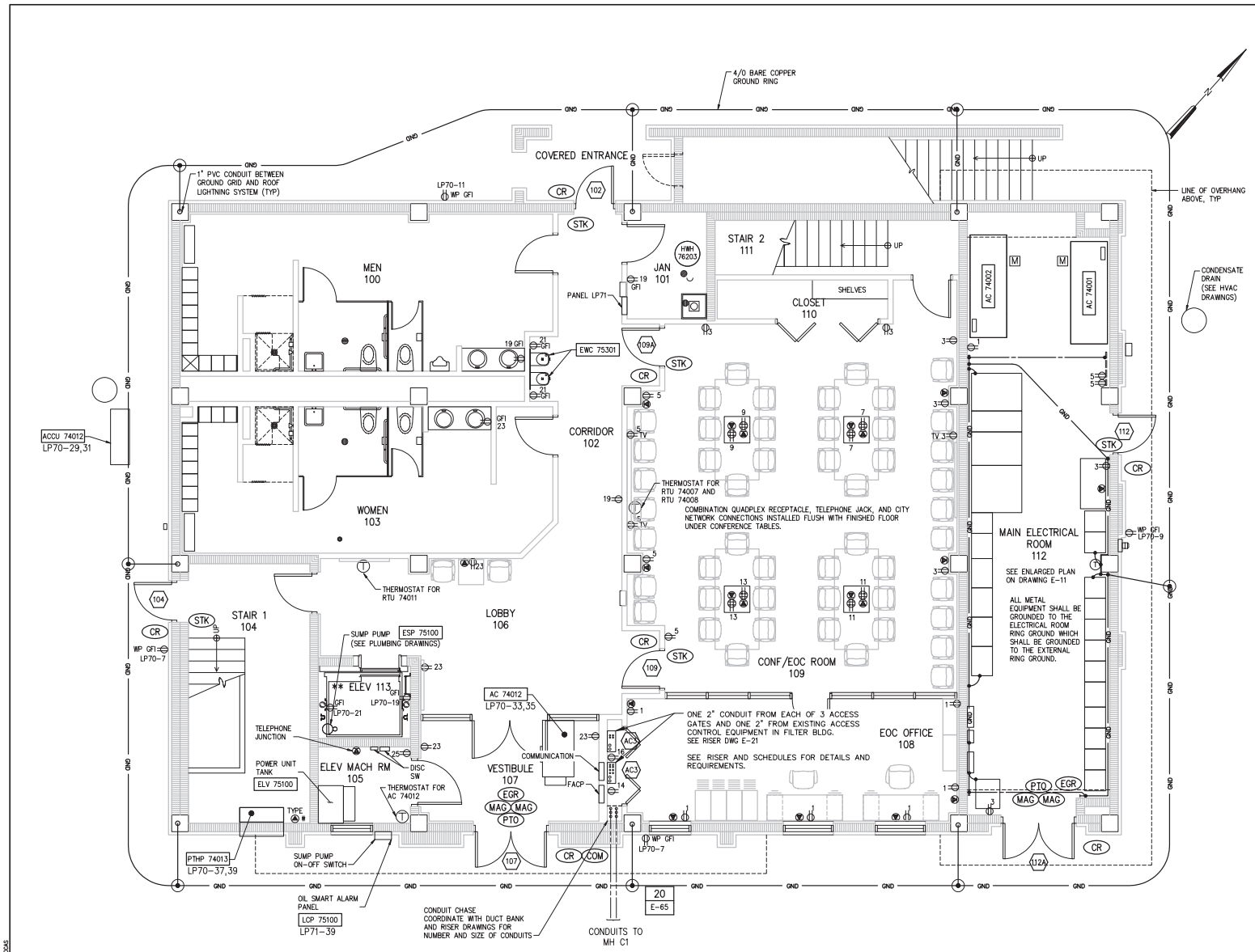

DOOR ACCESS CONTROL SCHEDULE			
DOOR NO.	DOOR LOCK TYPE	CARD READER	EGRESS BUTTON
102	STK 78102	CR 78102	NA
104	STK 78104	CR 78104	NA
107	MAG 78107	CR 78107	PTO 78107
109	STK 78109	CR 78109	NA
109A	STK 78109A	CR 78109A	NA
112	STK 78112	CR 78112	NA
112A	MAG 78112A	CR 78112A	PTO 78112A

GENERAL NOTES:

1. ALL CIRCUIT NUMBERS ON THIS FLOOR ARE FROM PANEL LP71 UNLESS OTHERWISE NOTED.
2. ELECTRIC ROOM CIRCUITS ARE FROM LP70 UNLESS OTHERWISE NOTED.
3. RECEPTACLES MARKED "TV" SHALL HAVE THEIR INSTALLATION HEIGHT COORDINATED WITH THE ASSOCIATED TV SCREEN OR EQUIPMENT.
4. CONTRACTOR SHALL FURNISH AND INSTALL ALL CONDUIT AND CABLES REQUIRED FOR THE ELECTRONIC ACCESS CONTROL AND ALARM MONITORING (EACAM) SYSTEM SPECIFIED IN SECTION 16700.
5. (EACAM) SYSTEM VENDOR SHALL TERMINATE ALL ELECTRONIC ACCESS CONTROL AND ALARM MONITORING SYSTEM CABLES AT ALL EQUIPMENT.
6. THE ROOF MOUNTED LIGHTNING PROTECTION SYSTEM DOWNLEADS SHALL BE ROUTED THROUGH 1" PVC CONDUITS INSTALLED WITHIN THE COLUMNS AS INDICATED IN THIS DRAWING. SEE ADDITIONAL DETAILS ON ELECTRICAL DETAIL DRAWINGS.
7. ** CONTRACTOR SHALL COORDINATE ALL ELECTRICAL DEVICES, CONDUIT, AND WIRING WITH ELEVATOR EQUIPMENT CONTRACTOR.

HVAC NOTES:

1. THE ELECTRICAL CONTRACTOR SHALL FURNISH AND INSTALL ALL RACEWAYS FOR HVAC CONTROL AND MONITORING WIRING. REQUIREMENTS SHALL BE DETERMINED THROUGH COORDINATION BETWEEN ELECTRICAL AND HVAC CONTRACTORS.
2. ELECTRICAL CONTRACTOR SHALL FURNISH AND INSTALL A MINIMUM 200 LB TEST PULL LINE IN EACH EMPTY CONDUIT INSTALLED.
3. HVAC CONTRACTOR SHALL FURNISH AND INSTALL WIRING.

SECURITY ACCESS NOTES:

1. THE ELECTRICAL CONTRACTOR SHALL FURNISH AND INSTALL ALL RACEWAYS FOR SECURITY ACCESS CONTROL AND MONITORING WIRING. REQUIREMENTS SHALL BE DETERMINED THROUGH COORDINATION BETWEEN ELECTRICAL AND ACCESS CONTROL CONTRACTORS.
2. ELECTRICAL CONTRACTOR SHALL FURNISH AND INSTALL A MINIMUM 200 LB TEST PULL LINE IN EACH EMPTY CONDUIT INSTALLED.
3. ACCESS CONTROL CONTRACTOR SHALL FURNISH AND INSTALL WIRING.

NOTE:

CONTRACTOR SHALL PROCURE A NORTH MIAMI BUILDING DEPARTMENT TEMPORARY CERTIFICATE OF OCCUPANCY (TCO) FOR THE MAIN ELECTRICAL ROOM PORTION OF THE PROPOSED ADMINISTRATION BUILDING, OR AS A SEPARATE ENTITY FROM THE ADMINISTRATION STRUCTURE. THIS TCO IS REQUIRED SO THAT THE MASTER PUMP STATION CAN BE PLACED IN OPERATION WITH REQUISITE VFDs AND SUPPORT ELECTRICAL / INSTRUMENTATION ITEMS THAT ARE HOUSED IN THE NEW MAIN ELECTRICAL ROOM.

SECURITY ACCESS DEVICES LEGEND

- (100) DOOR NUMBER
- (MAG) MAGNETIC DOOR LOCK
- (STK) ELECTRIC STRIKE IN DOOR FRAME
- (CR) CARD READER
- (PTO) EGRESS BUTTON
- (COM) INTERCOM
- (EGR) EGRESS MOTION DETECTOR
- (AC3) NEW ACCESS CONTROL EQUIPMENT IN ADMINISTRATION BUILDING

1/4"=1'-0" 1 0 1 2 3 7'

NO.	DATE	ISSUED FOR	BY
1	07/24/15	REQUEST FOR PROPOSAL	G.A.B.

DESIGNED J.M.B.
DRAWN L.M.S.
CHECKED J.C.B.
PROJ. ENGR. J.C.B.

JOHN C. BURKE P.E.
No. 17301

HAZEN AND SAWYER
Environmental Engineers & Scientists
4000 Hollywood Boulevard, Suite 750N
Hollywood, Florida 33021
Certificate of Authorization Number: 2771

SCALE 1/4"=1'-0"

CLIENTS PROJECT: –
ENGINEERS PROJECT: 44238-004
CAD REFERENCE: 44238-004BP3-E10

NORTH MIAMI FLORIDA
CITY OF NORTH MIAMI
PUBLIC WORKS UTILITIES

WINSON WATER TREATMENT PLANT
RELIABILITY IMPROVEMENTS – VOLUME C: WTP REHAB

NEW ADMINISTRATION BUILDING
FIRST FLOOR PLAN

DATE: JULY 2015
SHEET: 249 OF 335
DRAWING: E-10

REQUEST FOR PROPOSAL

PLOT DATE: 7/24/2015 4:35 PM BY: TBLOCAS

XREFs= ..\Tblock\44238-004-BP3-TB,..\Base-BP3\A-BP3-Admin-Plan-Bottom,..\Base-BP3\A-BP3-Admin-Plan-Col-Grid,..\Base-BP3\E-BP3-Admin-Plan-Bottom,..\Base-BP3\H-BP3-Admin-Plan-Bottom,..\Base-BP3\P-BP3-Admin-Plan-Bottom,..\Base-BP3\M-BP3-WellPumpNo2-Plan,..\Base-BP3\A-BP3-Admin-Plan-Bottom-Furniture

File = H:\44238-004\Drawings\design build package\volume c - wtp rehab\Bid Package 3 - WTP Rehab\Electrical\44238-004BP3-E10 Saved by jbroad Save date = 4/18/2014 11:17 AM

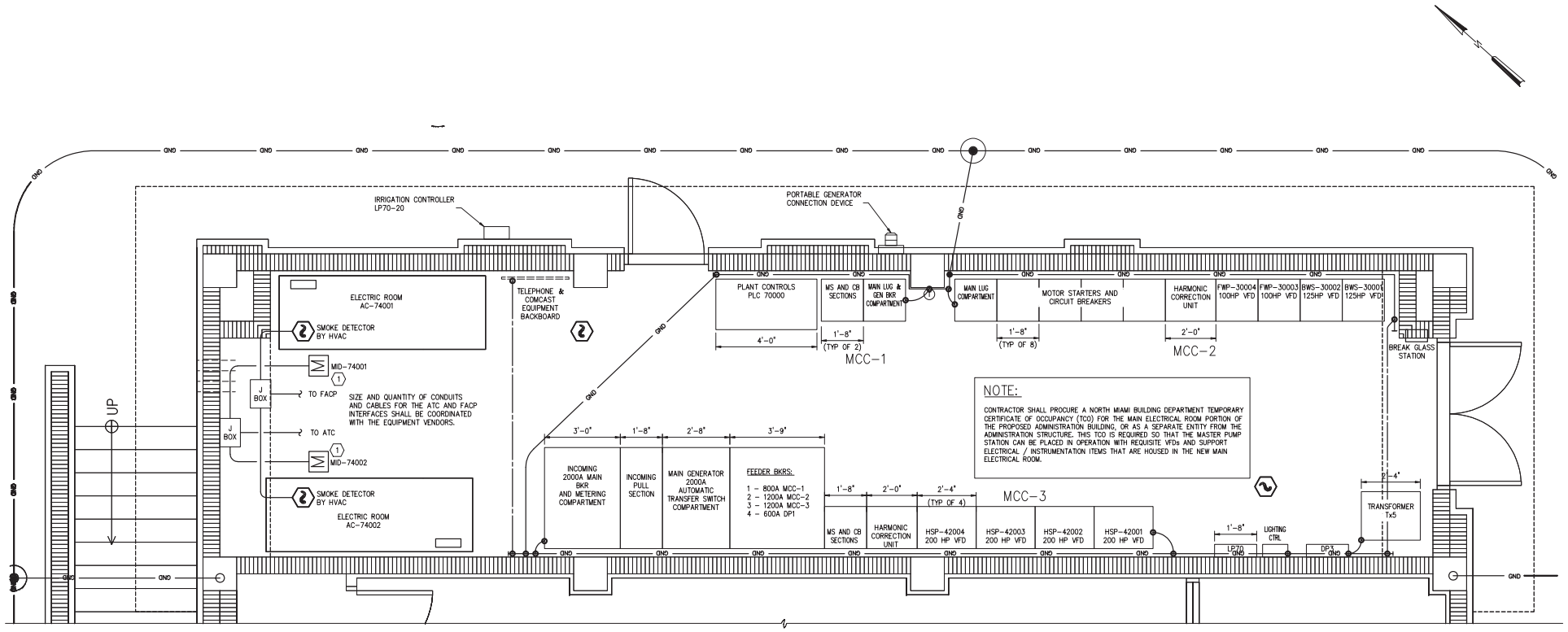

NOTE:

CONTRACTOR SHALL PROCURE A NORTH MIAMI BUILDING DEPARTMENT TEMPORARY CERTIFICATE OF OCCUPANCY (TCO) FOR THE MAIN ELECTRICAL ROOM PORTION OF THE PROPOSED ADMINISTRATION BUILDING, OR AS A SEPARATE ENTITY FROM THE ADMINISTRATION STRUCTURE. THIS TCO IS REQUIRED SO THAT THE MASTER PUMP STATION CAN BE PLACED IN OPERATION WITH REQUISITE VFDs AND SUPPORT ELECTRICAL / INSTRUMENTATION ITEMS THAT ARE HOUSED IN THE NEW MAIN ELECTRICAL ROOM.

KEYED NOTES:

(1) MOTORIZED ISOLATION DAMPER INTEGRAL TO HVAC EQUIPMENT. (SEE HVAC DRAWINGS)

MAIN ELECTRICAL ROOM PLAN
1/2" = 1'-0"

NOTES:
1. SEE ELECTRICAL SINGLE LINE DRAWING FOR EQUIPMENT NOT SHOWN ON THIS DRAWING.
2. SEE FIRE ALARM DRAWINGS FOR FIRE ALARM EQUIPMENT CONDUIT AND WIRING DETAILS.
3. IRRIGATION EQUIPMENT AND LOW VOLTAGE WIRING CONTROLLED WITH THE IRRIGATION CONTROLLER SHALL BE PROVIDED AND INSTALLED BY THE IRRIGATION CONTRACTOR

1/2"=1'-0"

NO.	DATE	ISSUED FOR	BY
1	07/24/15	REQUEST FOR PROPOSAL	G.A.B.

DESIGNED J.M.B.
DRAWN L.M.S.
CHECKED J.C.B.
PROJ. ENGR. J.C.B.

JOHN C. BURKE P.E.
No. 17301

HAZEN AND SAWYER
Environmental Engineers & Scientists
4000 Hollywood Boulevard, Suite 750N
Hollywood, Florida 33021
Certificate of Authorization Number: 2771

SCALE 1/2"=1'-0"

CLIENTS PROJECT: –
ENGINEERS PROJECT: 44238-004
CAD REFERENCE: 44238-004BP3-E11

NORTH MIAMI FLORIDA
CITY OF NORTH MIAMI
PUBLIC WORKS UTILITIES

WINSON WATER TREATMENT PLANT
RELIABILITY IMPROVEMENTS – VOLUME C: WTP REHAB
NEW ADMINISTRATION BUILDING
ELECTRICAL ROOM PLAN

DATE: JULY 2015
SHEET: 250 OF 335
DRAWING: E-11

REQUEST FOR PROPOSAL

PLOT DATE: 7/24/2015 4:36 PM BY: TBLOCAS

XREFs= ..\Tblock\44238-004-BP3-TB,..\Base-BP3\A-BP3-Admin-Plan-Bottom,..\Base-BP3\A-BP3-Admin-Plan-Col-Grid,..\Base-BP3\E-BP3-Admin-Plan-Bottom,..\Base-BP3\H-BP3-Admin-Plan-Bottom,..\Base-BP3\P-BP3-Admin-Plan-Bottom

File = H:\44238-004\Drawings\design build package\volume c - wtp rehab\Bid Package 3 - WTP Rehab\Electrical\44238-004BP3-E11 Saved by jbroad Save date = 6/8/2014 5:28 PM

DOOR ACCESS CONTROL SCHEDULE			
DOOR NO.	DOOR LOCK TYPE	CARD READER	EGRESS BUTTON
111A	STK 78111A	CR 78111A	NA
204	STK 78204	CR 78204	NA

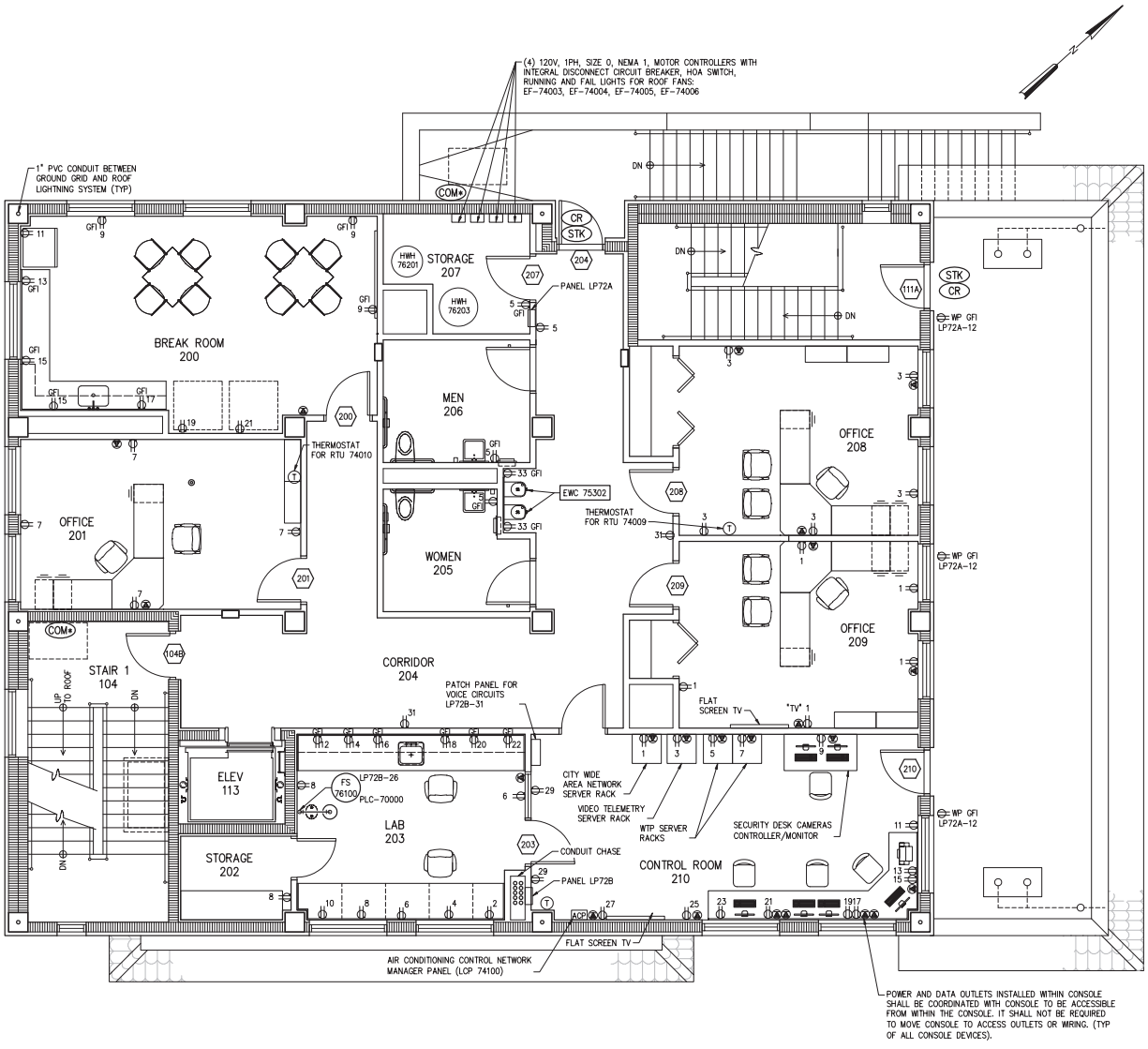

GENERAL NOTES:

1. ALL CIRCUIT NUMBERS ON THIS FLOOR ARE FROM PANEL LP72A OR LP72B UNLESS OTHERWISE NOTED.
2. RECEPTACLES MARKED "TV" SHALL HAVE THEIR INSTALLATION HEIGHT COORDINATED WITH THE ASSOCIATED TV SCREEN OR EQUIPMENT.
3. CONTRACTOR SHALL FURNISH AND INSTALL ALL CONDUIT AND CABLES REQUIRED FOR THE ELECTRONIC ACCESS CONTROL AND ALARM MONITORING (EACAM) SYSTEM SPECIFIED IN SECTION 16700.
4. (EACAM) SYSTEM VENDOR SHALL TERMINATE ALL ELECTRONIC ACCESS CONTROL AND ALARM MONITORING SYSTEM CABLES AT ALL EQUIPMENT.
5. PANEL LP72B POWERS CIRCUITS IN ROOMS 202, 203 AND 210 ONLY. PANEL LP72A POWERS REMAINING SECOND FLOOR CIRCUITS.

HVAC NOTES:

1. THE ELECTRICAL CONTRACTOR SHALL FURNISH AND INSTALL ALL RACEWAYS FOR HVAC CONTROL AND MONITORING WIRING. REQUIREMENTS SHALL BE DETERMINED THROUGH COORDINATION BETWEEN ELECTRICAL AND HVAC CONTRACTORS.
2. ELECTRICAL CONTRACTOR SHALL FURNISH AND INSTALL A MINIMUM 200 LB TEST PULL LINE IN EACH EMPTY CONDUIT INSTALLED.
3. HVAC CONTRACTOR SHALL FURNISH AND INSTALL ALL CONTROL WIRING INTERCONNECTING THE HVAC EQUIPMENT.
4. HVAC CONTRACTOR SHALL TERMINATE ALL HVAC CONTROL AND SIGNAL WIRING.

SECURITY ACCESS DEVICES LEGEND

- (100) DOOR NUMBER
- (MAG) MAGNETIC DOOR LOCK
- (STK) ELECTRIC STRIKE IN DOOR FRAME
- (CR) CARD READER
- (PTO) EGRESS BUTTON
- (COM) INTERCOM
- (COM•) AREA OF REFUGE INTERCOM SEE FIRE ALARM SYSTEM FOR DETAILS
- (EGR) EGRESS MOTION DETECTOR

1/4"=1'-0" 1 0 1 2 3 7'

REQUEST FOR PROPOSAL

NO.	DATE	ISSUED FOR	BY
1	07/24/15	REQUEST FOR PROPOSAL	G.A.B.

DESIGNED J.M.B.
DRAWN J.M.B.
CHECKED J.C.B.
PROJ. ENGR. J.C.B.

JOHN C. BURKE P.E.
No. 17301

HAZEN AND SAWYER
Environmental Engineers & Scientists
4000 Hollywood Boulevard, Suite 750N
Hollywood, Florida 33021
Certificate of Authorization Number: 2771

SCALE 1/4"=1'0"

CLIENTS PROJECT: –
ENGINEERS PROJECT: 44238-004
CAD REFERENCE: 44238-004BP3-E12

NORTH MIAMI FLORIDA
CITY OF NORTH MIAMI
PUBLIC WORKS UTILITIES

WINSON WATER TREATMENT PLANT
RELIABILITY IMPROVEMENTS – VOLUME C: WTP REHAB

NEW ADMINISTRATION BUILDING
SECOND FLOOR PLAN

DATE: JULY 2015
SHEET: 251 OF 335
DRAWING: E-12

PLOT DATE: 7/24/2015 4:36 PM BY: TBOCAS

XREFs= ..\Tblock\44238-004-BP3-TB,..\Base-BP3\A-BP3-Admin-Plan-Top-Furniture,..\Base-BP3\A-BP3-Admin-Plan-Top

File = H:\44238-004\Drawings\design build package\volume c - wtp rehab\Bid Package 3 - WTP Rehab\Electrical\44238-004BP3-E12 Saved by tbocas Save date = 5/18/2015 11:14 AM

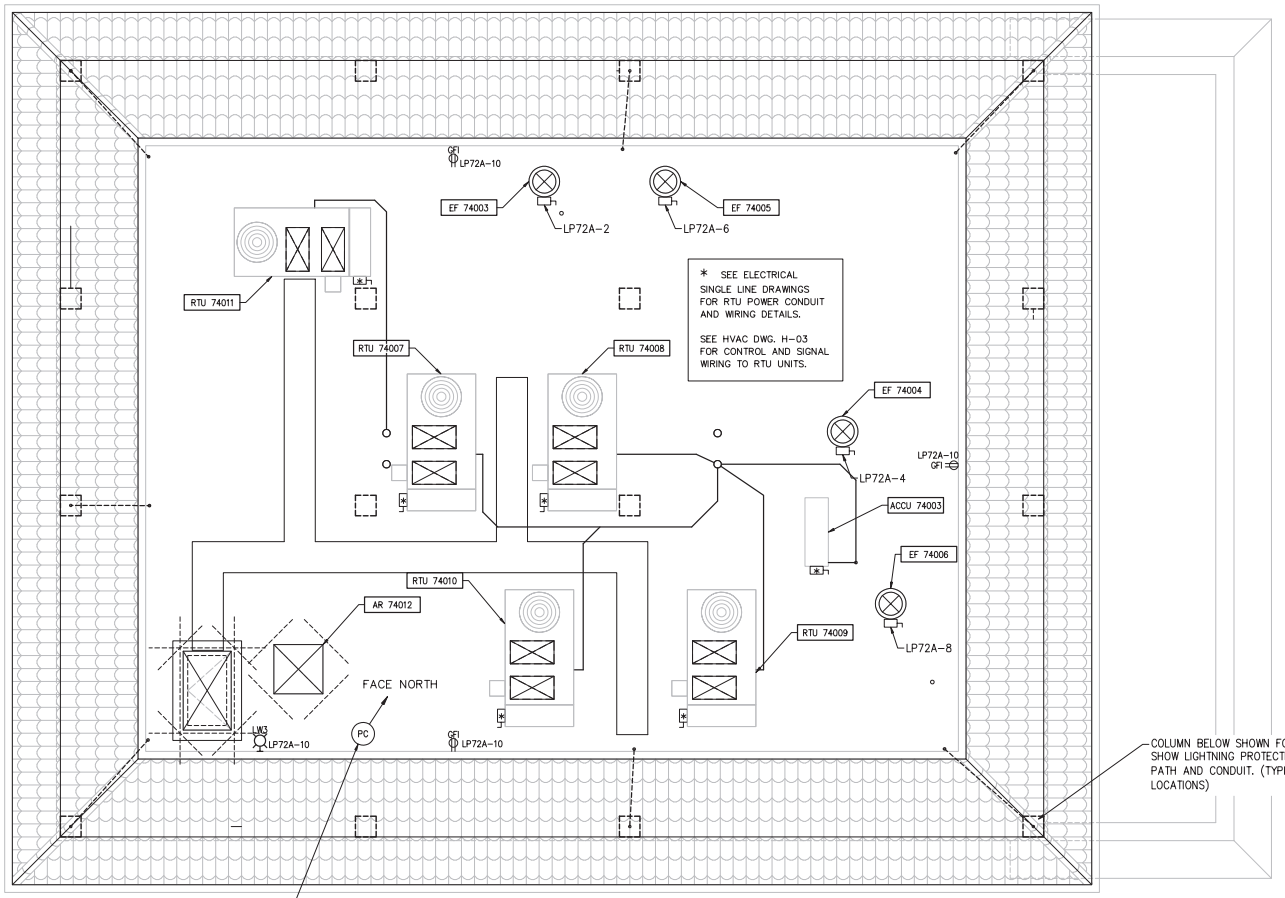

ROOF PLAN
1/4" = 1'-0"

NOTES:
1. SEE ELECTRICAL DETAILS ON DRAWING E-68 FOR LIGHTNING SYSTEM DOWNLEADS CONDUIT AND WIRING DETAILS.

1/4"=1'-0" 1 0 1 2 3 7'

NO.	DATE	ISSUED FOR	BY
1	07/24/15	REQUEST FOR PROPOSAL	G.A.B.

DESIGNED J.M.B.
DRAWN G.P.B.
CHECKED J.C.B.
PROJ. ENGR. J.C.B.

JOHN C. BURKE P.E.
No. 17301

HAZEN AND SAWYER
Environmental Engineers & Scientists
4000 Hollywood Boulevard, Suite 750N
Hollywood, Florida 33021
Certificate of Authorization Number: 2771

SCALE 1/4" = 1'-0"

CLIENTS PROJECT: –
ENGINEERS PROJECT: 44238-004
CAD REFERENCE: 44238-004BP3-E13

NORTH MIAMI FLORIDA
CITY OF NORTH MIAMI
PUBLIC WORKS UTILITIES

WINSON WATER TREATMENT PLANT
RELIABILITY IMPROVEMENTS – VOLUME C: WTP REHAB
NEW ADMINISTRATION BUILDING
ROOF POWER

DATE: JULY 2015
SHEET: 252 OF 335
DRAWING: E-13

REQUEST FOR PROPOSAL

PLOT DATE: 7/24/2015 4:36 PM BY: TBLOCAS

XREFs= ..\Tblock\44238-004-BP3-TB,..\Base-BP3\H-BP3-Admin-Plan-Roof,..\Base-BP3\A-BP3-Admin-Plan-Roof,..\Base-BP3\S-BP3-Admin-Plan-Roof

File = H:\44238-004\Drawings\design build package\volume c - wtp rehab\Bid Package 3 - WTP Rehab\Electrical\44238-004BP3-E13 Saved by jbroad Save date = 12/20/2013 10:59 AM

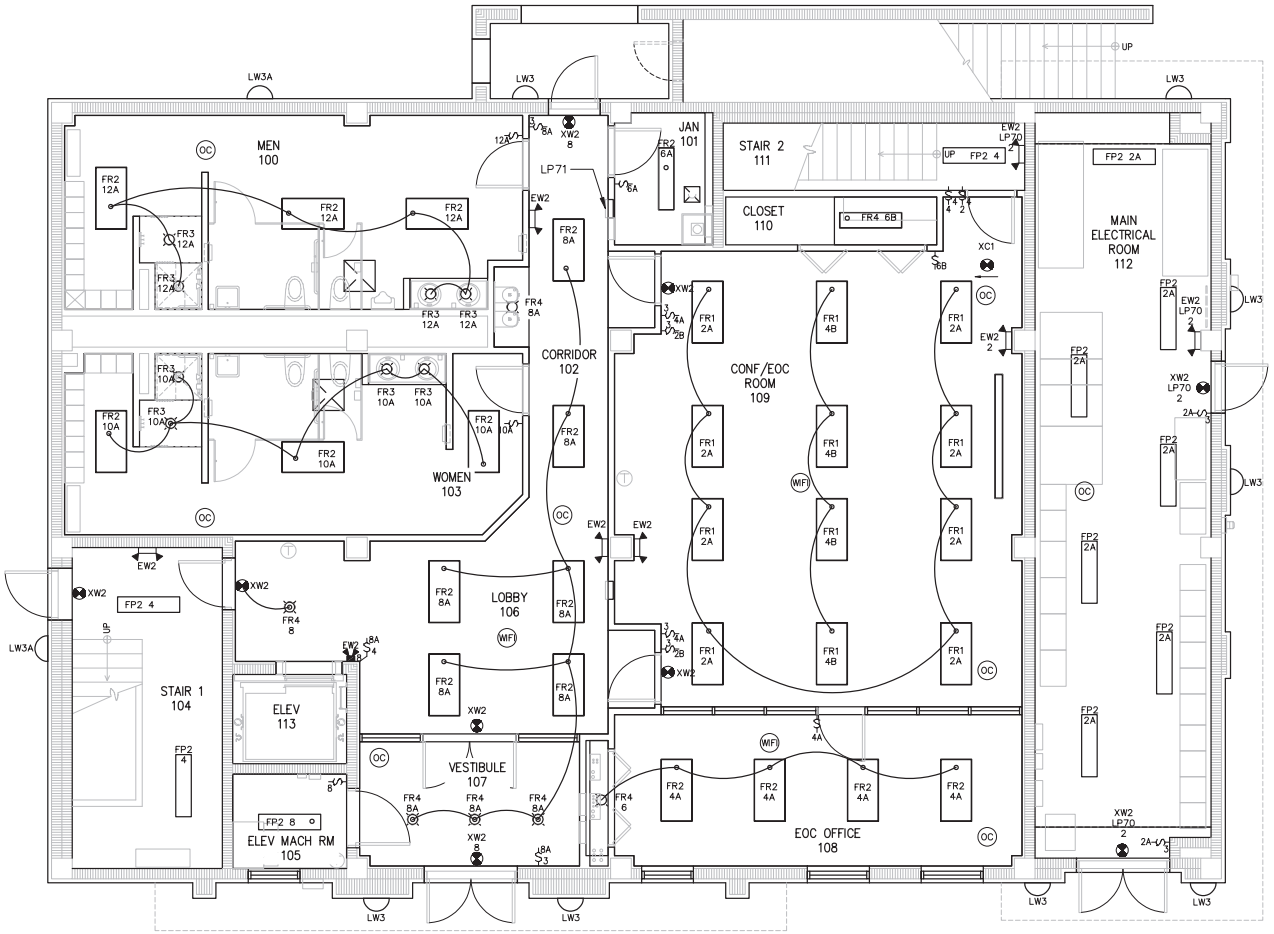

FIRST FLOOR LIGHTING
1/4" = 1'-0"

NOTES:

1. SEE LIGHTING SCHEDULE IN SPECIFICATION SECTION 16500 FOR FIXTURE DETAILS
2. CONDUIT AND WIRE ROUTING SHOWN FOR EXAMPLE ONLY. CONTRACTOR SHALL DETERMINE ACTUAL ROUTING.
3. FP2 FIXTURES IN ELECTRICAL ROOM TO BE MOUNTED 9'-0" ABOVE FINISHED FLOOR.
4. PROVIDE LIGHT AND SWITCH IN ELEVATOR PIT. COORDINATE REQUIREMENT WITH ELEVATOR MFR.
5. LIGHT FIXTURE CONNECTIONS DEPICT PROPOSED SWITCHING ARRANGEMENTS FROM THE ASSOCIATED LIGHT SWITCH OR OCCUPANCY CONTROL UNIT.
6. LIGHTING IN ELECTRICAL ROOM 112 SHALL BE FROM PANEL LP70.
7. ELECTRICAL ROOM 112 EMERGENCY FIXTURES SHALL BE ON SAME LIGHTING CIRCUIT AS ROOM LIGHTS BUT SHALL NOT BE SWITCHED AND SHALL BE POWERED FULL TIME.
8. INTERIOR EMERGENCY LIGHTING FIXTURES SHALL BE POWERED FROM THE SAME ROOM LIGHTING CIRCUIT WHERE THE EMERGENCY FIXTURE IS INSTALLED, BUT SHALL NOT BE SWITCHED.
9. SEE SITE LIGHTING CONTROL ON DRAWING E-55 FOR ADMINISTRATION BUILDING OUTSIDE WALL LIGHTING.

LEGEND:

(WIF) APPROXIMATE LOCATION FOR CEILING MOUNTED WIFI EQUIPMENT. CONTRACTOR SHALL PROVIDE AND INSTALL A 3/4" CONDUIT BETWEEN EACH DEVICE AND THE CITY WIDE NETWORK SERVER IN THE SECOND FLOOR CONTROL ROOM.

(OC) APPROXIMATE LOCATION FOR CEILING MOUNTED LIGHTING OCCUPANCY SENSORS. CONTRACTOR SHALL PROVIDE AND INSTALL 3/4" CONDUIT AND SYSTEM REQUIRED WIRING INTERCONNECTING THE SENSORS TO THE ASSOCIATED ROOM LIGHTING CONTROLS. SEE DRAWING E-55 FOR A SAMPLE SCHEMATIC. CONTRACTOR SHALL COORDINATE WIRING WITH ACTUAL SUPPLIED EQUIPMENT SCHEMATIC.

LP72A-39A — LIGHTING SWITCH DESIGNATION
- ASSOCIATED FIXTURE
- CIRCUIT #
- PANEL

LW3 — FIXTURE TYPE
LP72A — PANEL
12A — CIRCUIT # / ASSOCIATED FIXTURE GROUP

1/4"=1'-0"

NO.	DATE	ISSUED FOR	BY
1	07/24/15	REQUEST FOR PROPOSAL	G.A.B.

DESIGNED J.M.B.
DRAWN G.P.B.
CHECKED J.C.B.
PROJ. ENGR. J.C.B.

JOHN C. BURKE P.E.
No. 17301

HAZEN AND SAWYER
Environmental Engineers & Scientists
4000 Hollywood Boulevard, Suite 750N
Hollywood, Florida 33021
Certificate of Authorization Number: 2771

SCALE 1/4"=1'-0"

CLIENTS PROJECT: –
ENGINEERS PROJECT: 44238-004
CAD REFERENCE: 44238-004BP3-E14

CITY OF NORTH MIAMI
PUBLIC WORKS UTILITIES

WINSON WATER TREATMENT PLANT
RELIABILITY IMPROVEMENTS – VOLUME C: WTP REHAB

NEW ADMINISTRATION BUILDING
FIRST FLOOR LIGHTING

DATE: JULY 2015
SHEET: 253 OF 335
DRAWING: E-14

REQUEST FOR PROPOSAL

PLOT DATE: 7/24/2015 4:36 PM BY: TBOCAS

XREFs= ..\Tblock\44238-004-BP3-TB,..\Base-BP3\A-BP3-Admin-Plan-Bottom-Reflected-Ceiling,..\Base-BP3\A-BP3-Admin-Plan-Bottom,..\Base-BP3\A-BP3-Admin-Plan-Col-Grid,..\Base-BP3\H-BP3-Admin-Plan-Bottom,..\Base-BP3\E-BP3-Admin-Plan-Bottom

File = H:\44238-004\Drawings\design build package\volume c - wtp rehab\Bid Package 3 - WTP Rehab\Electrical\44238-004BP3-E14 Saved by tbocas Save date = 5/18/2015 11:14 AM

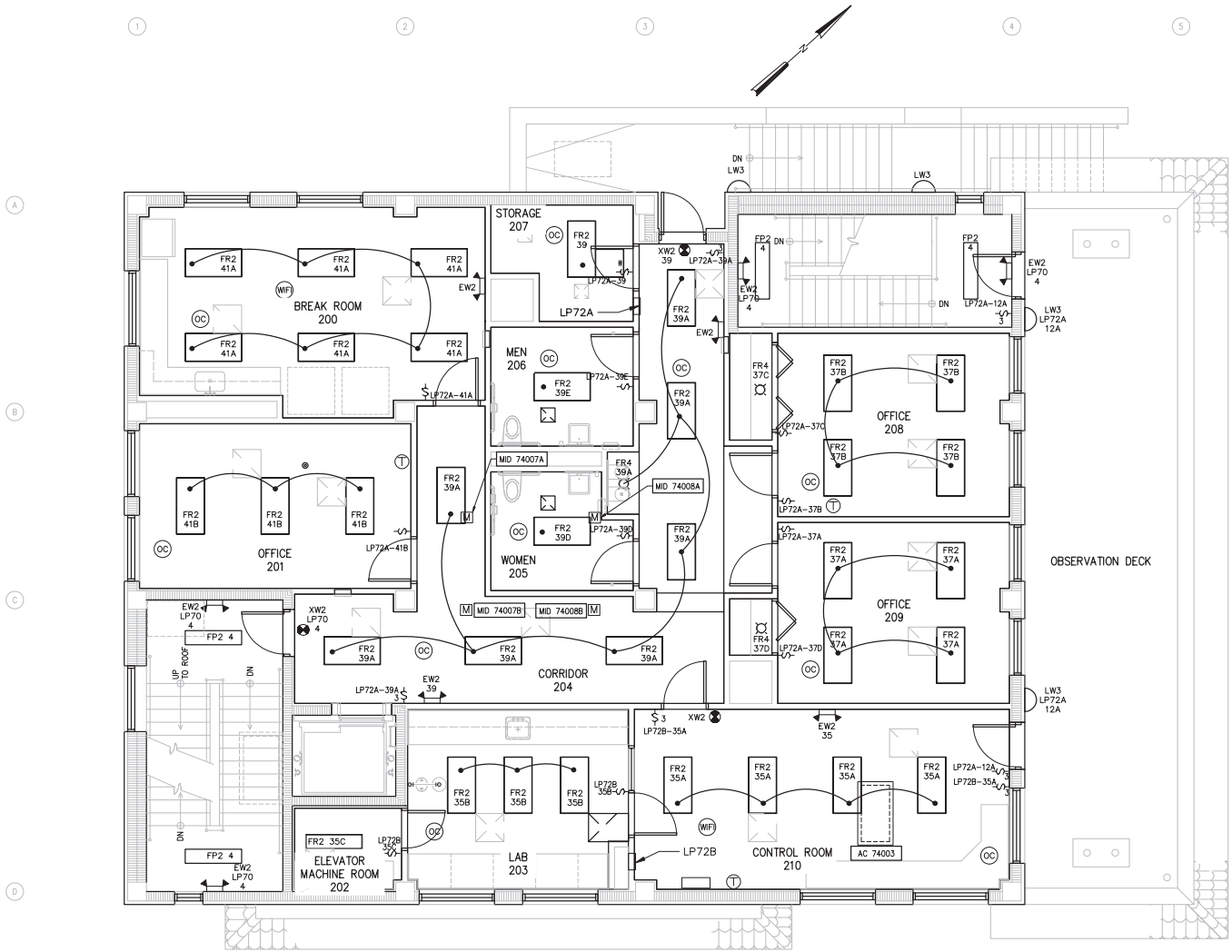

SECOND FLOOR LIGHTING

1/4" = 1'-0"

NOTES:

1. SEE LIGHTING SCHEDULE IN SPECIFICATION SECTION 16500 FOR FIXTURE DETAILS
2. CONDUIT AND WIRE ROUTING SHOWN FOR EXAMPLE ONLY. CONTRACTOR SHALL DETERMINE ACTUAL ROUTING.
3. LIGHT FIXTURE CONNECTIONS DEPICT PROPOSED SWITCHING ARRANGEMENTS FROM THE ASSOCIATED LIGHT SWITCH OR OCCUPANCY CONTROL UNIT.
4. SEE SITE LIGHTING CONTROL ON DRAWING E-55 FOR ADMINISTRATION BUILDING OUTSIDE WALL LIGHTING.

LEGEND:

(WIF) APPROXIMATE LOCATION FOR CEILING MOUNTED WIFI EQUIPMENT. CONTRACTOR SHALL PROVIDE AND INSTALL A 3/4" CONDUIT BETWEEN EACH DEVICE AND THE CITY WIDE NETWORK SERVER IN THE SECOND FLOOR CONTROL ROOM.

(OC) APPROXIMATE LOCATION FOR CEILING MOUNTED LIGHTING OCCUPANCY SENSORS. CONTRACTOR SHALL PROVIDE AND INSTALL 3/4" CONDUIT AND SYSTEM REQUIRED WIRING INTERCONNECTING THE SENSORS TO THE ASSOCIATED ROOM LIGHTING CONTROLS. SEE DRAWING E-55 FOR A SAMPLE SCHEMATIC. CONTRACTOR SHALL COORDINATE WIRING WITH ACTUAL SUPPLIED EQUIPMENT SCHEMATIC.

LP72A-39A — LIGHTING SWITCH DESIGNATION
- ASSOCIATED FIXTURE
- CIRCUIT #
- PANEL

LW3 — FIXTURE TYPE
LP72A — PANEL
12A — CIRCUIT # / ASSOCIATED FIXTURE GROUP

1/4"=1'-0" 1 0 1 2 3 7'

NO.	DATE	ISSUED FOR	BY
1	07/24/15	REQUEST FOR PROPOSAL	G.A.B.

DESIGNED J.M.B.
DRAWN G.P.B.
CHECKED J.C.B.
PROJ. ENGR. J.C.B.

JOHN C. BURKE P.E.
No. 17301

HAZEN AND SAWYER
Environmental Engineers & Scientists
4000 Hollywood Boulevard, Suite 750N
Hollywood, Florida 33021
Certificate of Authorization Number: 2771

SCALE 1/4"=1'-0"

CLIENTS PROJECT: –
ENGINEERS PROJECT: 44238-004
CAD REFERENCE: 44238-004BP3-E15

NORTH MIAMI FLORIDA
CITY OF NORTH MIAMI
PUBLIC WORKS UTILITIES

WINSON WATER TREATMENT PLANT
RELIABILITY IMPROVEMENTS – VOLUME C: WTP REHAB
NEW ADMINISTRATION BUILDING
SECOND FLOOR LIGHTING

DATE: JULY 2015
SHEET: 254 OF 335
DRAWING: E-15

REQUEST FOR PROPOSAL

PLOT DATE: 7/24/2015 4:36 PM BY: TBOCAS

XREFs= ..\Tblock\44238-004-BP3-TB,..\Base-BP3\A-BP3-Admin-Plan-Col-Grid,..\Base-BP3\A-BP3-Admin-Plan-Top,..\Base-BP3\A-BP3-Admin-Plan-Top-Reflected-Ceiling,..\Base-BP3\H-BP3-Admin-Plan-Top

File = H:\44238-004\Drawings\design build package\volume c - wtp rehab\Bid Package 3 - WTP Rehab\Electrical\44238-004BP3-E15 Saved by tbocas Save date = 5/18/2015 11:14 AM

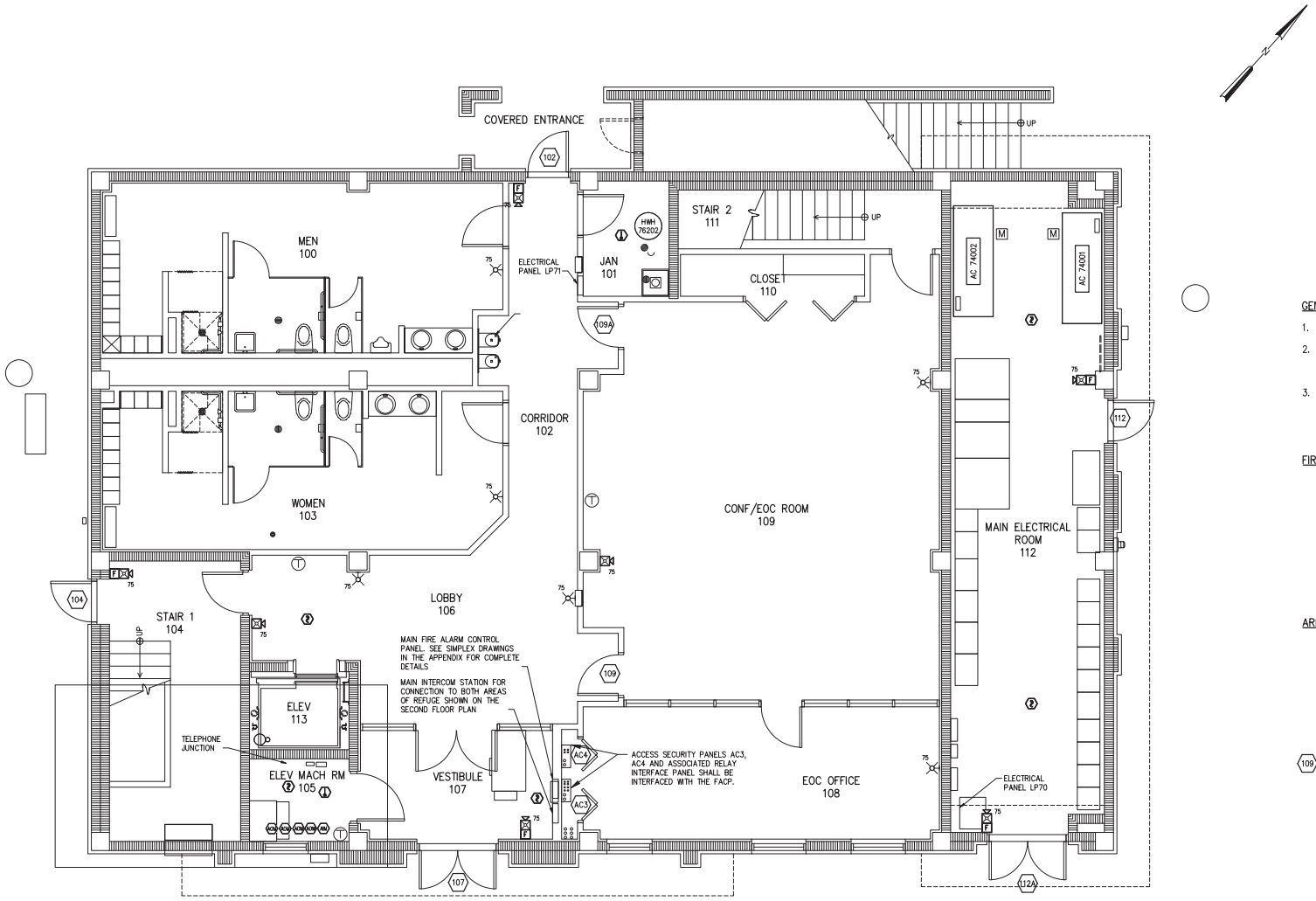

FIRST FLOOR FIRE ALARM SYSTEM

GENERAL NOTES:

1. DOORS NOT SHOWN FOR CLARITY
2. ALL CIRCUIT NUMBERS ON THIS FLOOR ARE FROM PANEL LP71 UNLESS OTHERWISE NOTED.
3. ELECTRIC ROOM CIRCUITS ARE FROM LP70 UNLESS OTHERWISE NOTED.

FIRE ALARM SYSTEM NOTES:

THE FIRE ALARM SYSTEM SHOWN IS FOR CONCEPTUAL PURPOSES ONLY. THE ACTUAL FIRE ALARM SYSTEM SHALL BE DESIGNED A BY THE VENDOR AS DESCRIBED IN THE SPECIFICATIONS.

SEE PROPOSED FIRE ALARM DRAWINGS BY THE VENDOR IN APPENDIX FOR DETAILS, CONDUIT ROUTING AND WIRING REQUIREMENTS.

AREA OF REFUGE NOTES:

AREA OF REFUGE 1 AND 2 SHOWN ON THE SECOND FLOOR PLAN SHALL HAVE COMMUNICATIONS (INTERCOM) BETWEEN THE AREA OF REFUGE AND THE MAIN COMMUNICATION PANEL ADJACENT TO THE FIRE ALARM CONTROL PANEL IN THE VESTIBULE.

(109) DOOR IDENTIFICATION NUMBER (TYP)

1/4"=1'-0"

NO.	DATE	ISSUED FOR	BY
1	07/24/15	REQUEST FOR PROPOSAL	G.A.B.

DESIGNED J.M.B.
DRAWN L.M.S.
CHECKED J.C.B.
PROJ. ENGR. J.C.B.

JOHN C. BURKE P.E.
No. 17301

HAZEN AND SAWYER
Environmental Engineers & Scientists
4000 Hollywood Boulevard, Suite 750N
Hollywood, Florida 33021
Certificate of Authorization Number: 2771

SCALE 1/4"=1'-0"

CLIENTS PROJECT: –
ENGINEERS PROJECT: 44238-004
CAD REFERENCE: 44238-004BP3-E16

NORTH MIAMI FLORIDA
CITY OF NORTH MIAMI
PUBLIC WORKS UTILITIES

WINSON WATER TREATMENT PLANT
RELIABILITY IMPROVEMENTS – VOLUME C: WTP REHAB

NEW ADMINISTRATION BUILDING
FIRST FLOOR FIRE ALARM PLAN

DATE: JULY 2015
SHEET: 255 OF 335
DRAWING: E-16

REQUEST FOR PROPOSAL

PLOT DATE: 7/24/2015 4:36 PM BY: TBOCAS

File = H:\44238-004\Drawings\design build package\volume c - wtp rehab\Bid Package 3 - WTP Rehab\Electrical\44238-004BP3-E16 Saved by tbocas Save date = 5/18/2015 11:14 AM

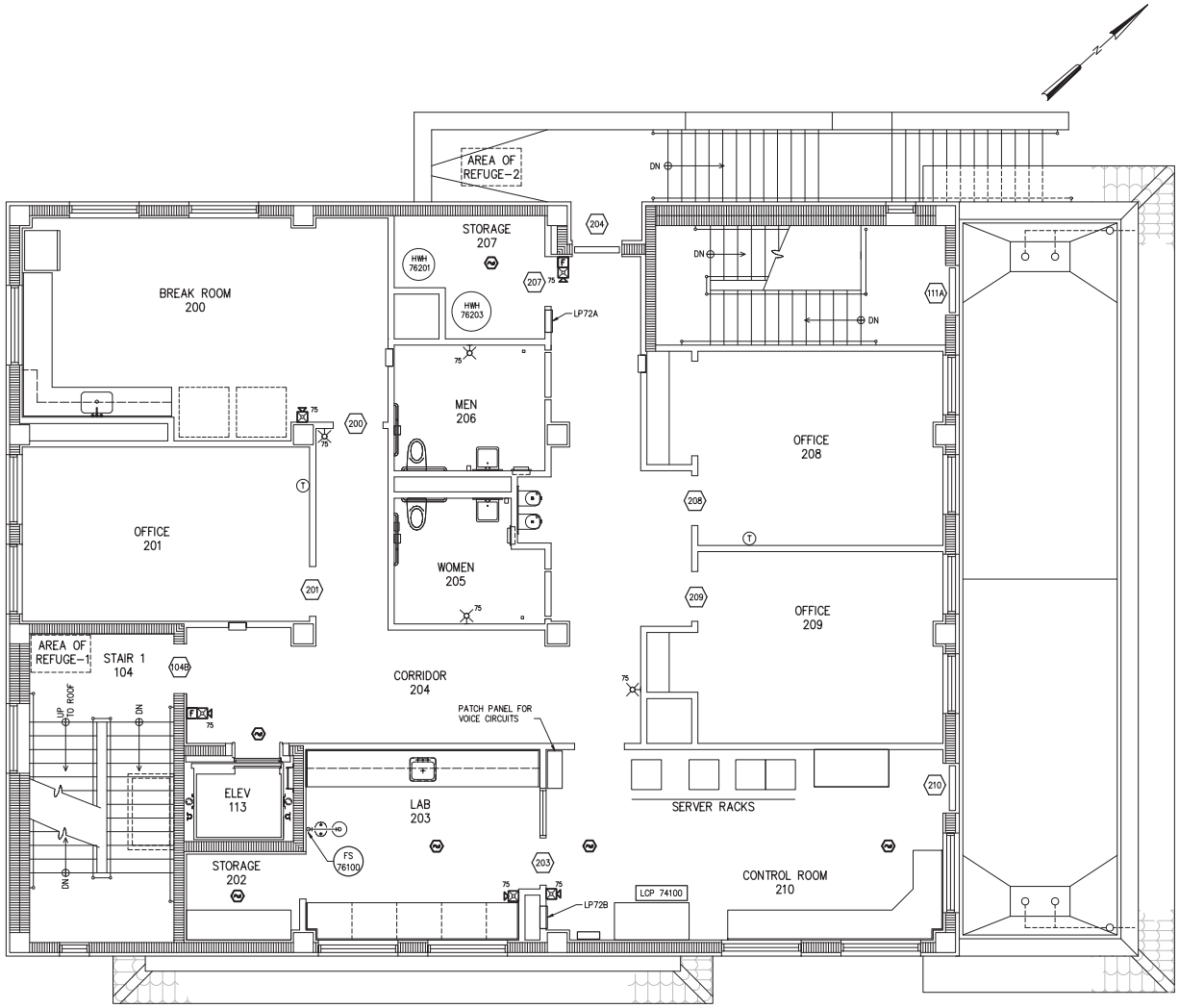

SECOND FLOOR FIRE ALARM SYSTEM

GENERAL NOTES:

1. DOORS NOT SHOWN FOR CLARITY
2. ALL CIRCUIT NUMBERS ON THIS FLOOR ARE FROM PANEL LP72A OR LP72B UNLESS OTHERWISE NOTED.

FIRE ALARM SYSTEM NOTES:

THE FIRE ALARM SYSTEM SHOWN IS FOR CONCEPTUAL PURPOSES ONLY. THE ACTUAL FIRE ALARM SYSTEM SHALL BE DESIGNED A BY THE VENDOR AS DESCRIBED IN THE SPECIFICATIONS.

SEE PROPOSED FIRE ALARM DRAWINGS BY THE VENDOR IN APPENDIX FOR DETAILS, CONDUIT ROUTING AND WIRING REQUIREMENTS.

AREA OF REFUGE NOTES:

AREA OF REFUGE 1 AND 2 SHALL HAVE COMMUNICATIONS (INTERCOM) BETWEEN THE AREA OF REFUGE AND THE MAIN COMMUNICATION PANEL ADJACENT TO THE FIRE ALARM CONTROL PANEL IN THE VESTIBULE ON THE FIRST FLOOR.

1/4"=1'-0"

NO.	DATE	ISSUED FOR	BY
1	07/24/15	REQUEST FOR PROPOSAL	G.A.B.

DESIGNED J.M.B.
DRAWN J.M.B.
CHECKED J.C.B.
PROJ. ENGR. J.C.B.

JOHN C. BURKE P.E.
No. 17301

HAZEN AND SAWYER
Environmental Engineers & Scientists
4000 Hollywood Boulevard, Suite 750N
Hollywood, Florida 33021
Certificate of Authorization Number: 2771

SCALE 1/4"=1'0"

CLIENTS PROJECT: –
ENGINEERS PROJECT: 44238-004
CAD REFERENCE: 44238-004BP3-E17

CITY OF NORTH MIAMI
PUBLIC WORKS UTILITIES

WINSON WATER TREATMENT PLANT
RELIABILITY IMPROVEMENTS – VOLUME C: WTP REHAB
NEW ADMINISTRATION BUILDING
SECOND FLOOR FIRE ALARM PLAN

DATE: JULY 2015
SHEET: 256 OF 335
DRAWING: E-17

REQUEST FOR PROPOSAL

PLOT DATE: 7/24/2015 4:36 PM BY: TBOCAS

File = H:\44238-004\Drawings\design build package\volume c - wtp rehab\Bid Package 3 - WTP Rehab\Electrical\44238-004BP3-E17 Saved by tbocas Save date = 5/18/2015 11:14 AM

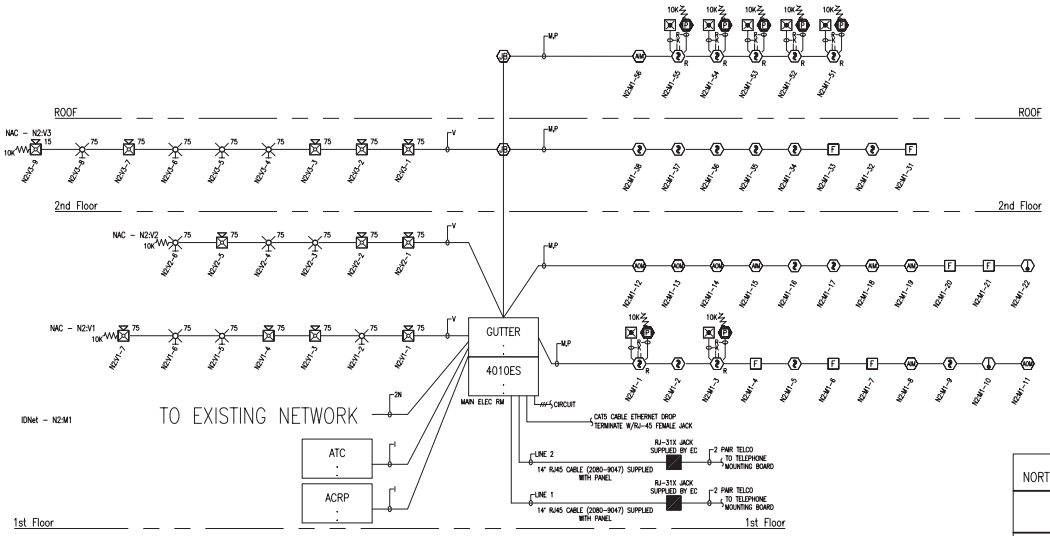

Battery Set #1 (Cabinet/Charger #1)			Standby Current	Standby Total	Alarm Current	Alarm Total
Select ALL Power Supplies on this battery set:						
			Sub Total	0.3370		2.3390
Additional Current Draws:						
RUI Connected Peripheral Devices	0		x 0.0035	= 0.0000	x 0.0035	= 0.0000
MAPNET/IDNet Device Addresses ordered / used	0		x 0.000800	= 0.0000	x 0.001000	= 0.0000
			Sub Total	0.3370		2.3390
Spare addressable point capacity	0%	0	x 0.0008	= 0.0000	x 0.001	= 0.0000
			Total	0.3370		2.3390
Standby Time =	24	Hrs	x 0.3370	= 8.0880	Standby Ah	
Alarm Time =	5	Min	0.08333 x 2.339	= 0.1949	Alarm Ah	
				8.2829		
Additional Spare Capacity =	20%			+ 1.6566		
				9.9395		
Battery Discharge Factor =	20%			+ 1.9879		
Minimum Battery Required	2081-9288 12AH (2x)			11.9274		
Battery Supplied	2081-9288 12AH (2x)					

NORTH MIAMI WATER TREATMENT PLANT 4010es FACP

Module	Qty	Description		Standby Current	Total Standby	Alarm Current	Total Alarm
Panel Equipment							
4010-9401	1	FACP, 248PT IDNET, 1 BAY, 120V, RED	*	0.3160	0.3160	0.4300	0.4300
		Panel Totals			0.3160		0.4300
IDNet Addressable Devices (SLC)							
4099-9001	7	IDNET SINGLE ACTION PULL STATION	**	0.0000	0.0000	0.0000	0.0000
4090-9001	5	IDNET SUPERVISED IAM	**	0.0000	0.0000	0.0000	0.0000
4090-9002	4	IDNET RELAY IAM	**	0.0000	0.0000	0.0000	0.0000
4098-9714	11	TRUEALARM PHOTO SMOKE SENSOR		0.0000	0.0000	0.0000	0.0000
4098-9733	2	TRUEALARM HEAT SENSOR		0.0000	0.0000	0.0000	0.0000
4098-9756	7	TRUEALARM DUCT SMOKE SENSOR W/ RELAY OUTPUT	**	0.0000	0.0000	0.0000	0.0000
4098-9792	13	TRUEALARM SENSOR BASE	**	0.0000	0.0000	0.0000	0.0000
Miscellaneous Peripheral Devices That May Require System Power							
4098-9843	7	ENCAPSULATED RELAY PAM-SD		0.0000	0.0000	0.0150	0.1050
4098-9756	7	TRUEALARM DUCT SMOKE SENSOR W/ RELAY OUTPUT		0.0030	0.0210	0.0150	0.1050
Notification Appliances							
4906-9101	5	V/O MC NON-ADDRESS, RED, WALL	15	0.0000	0.0000	0.0600	0.3000
4906-9101	4	V/O MC NON-ADDRESS, RED, WALL	30	0.0000	0.0000	0.0940	0.3760
4906-9127	9	A/V MC NON-ADDRESS, RED, WALL	15	0.0000	0.0000	0.0750	0.6750
4906-9127	3	A/V MC NON-ADDRESS, RED, WALL	30	0.0000	0.0000	0.1160	0.3480
		Peripheral Totals			0.0210		1.9090
		RUI Totals	0		0.0000		0.0000
		Address Totals	36 Addresses		0.0288		0.0360
			Total Standby		0.3658	Total Alarm	2.3750

* Current draw included under "Device Addresses Used" (See "Additional Current Draws:")
1. 2-wire detector alarm current is included in the alarm current of the Initiating Device Circuit.
2. Backup Amplifier assumes Main Amplifier alarm current on failure.

NOTES:

1. THE ABOVE FIRE ALARM SYSTEM SINGLE LINE DIAGRAM SHOWN IS FOR CONCEPTUAL PURPOSES ONLY. THE ACTUAL FIRE ALARM SYSTEM SINGLE LINE DIAGRAM SHALL BE DESIGNED BY THE VENDOR AS DESCRIBED IN THE SPECIFICATIONS.
2. SEE PROPOSED FIRE ALARM DRAWINGS BY THE VENDOR IN APPENDIX FOR DETAILS, CONDUIT ROUTING AND WIRING REQUIREMENTS.
3. THERE WILL BE TWO "AREAS OF REFUGE" REQUIRED ON THE SECOND FLOOR; EACH WITH AN AUDIO COMMUNICATION DEVICE (INTERCOM) CONNECTED TO A MAIN INTERCOM STATION LOCATED ADJACENT TO THE FACP OR AS AN INTEGRAL PART OF THE FACP.
4. FACP SHALL SIGNAL THE AC NETWORK MANAGER PANEL (ATC) TO DEACTIVATE THE THE HVAC EQUIPMENT AND POSITION ALL CONTROLLABLE DAMPERS IN PROPER POSITION.
5. FACP SHALL SIGNAL THE SECURITY ACCESS CONTROL PANELS VIA AN ACCESS SECURITY RELAY PANEL (ACRP) WHICH SHALL RELEASE LOCKED DOORS AND OPEN SITE GATES IF SECURITY ALLOWS.

1/4"=1'-0"

NO.	DATE	ISSUED FOR	BY
1	07/24/15	REQUEST FOR PROPOSAL	G.A.B.

DESIGNED J.M.B.
DRAWN J.M.B.
CHECKED J.C.B.
PROJ. ENGR. J.C.B.

JOHN C. BURKE P.E.
No. 17301

HAZEN AND SAWYER
Environmental Engineers & Scientists
4000 Hollywood Boulevard, Suite 750N
Hollywood, Florida 33021
Certificate of Authorization Number: 2771

SCALE 1/4"=1'0"

CLIENTS PROJECT: –
ENGINEERS PROJECT: 44238-004
CAD REFERENCE: 44238-004BP3-E18

CITY OF NORTH MIAMI
PUBLIC WORKS UTILITIES

WINSON WATER TREATMENT PLANT
RELIABILITY IMPROVEMENTS – VOLUME C: WTP REHAB

NEW ADMINISTRATION BUILDING FIRE ALARM RISER AND CALCULATIONS

DATE: JULY 2015
SHEET: 257 OF 335
DRAWING: E-18

REQUEST FOR PROPOSAL

PLOT DATE: 7/24/2015 4:36 PM BY: TBOCAS

File = H:\44238-004\Drawings\design build package\volume c - wtp rehab\Bid Package 3 - WTP Rehab\Electrical\44238-004BP3-E18 Saved by tbocas Save date = 5/18/2015 11:14 AM

WIRE SCHEDULE

FIRE ALARM WIRE LIST

B	RUI/N2 COMMUNICATION – 1 PAIR 18 AWG TWISTED OVERALL SHIELD NON-PLENUM RATED: FPL PAIGE 740215 AREA=0.0196 SQ. INCH	NON-PLENUM RATED: FPLR PAIGE 740215 AREA=0.0196 SQ. INCH	PLENUM RATED: FPLP PAIGE 740214L AREA=0.0196 SQ. INCH
K	REMOTE TEST SWITCH/LED CIRCUIT – (2) 2 CONDUCTOR 18 AWG SOLID NON-PLENUM RATED: FPLR PAIGE 454703ARE AREA=0.0204 SQ. INCH	CONDUIT ONLY: TFTN (2) #18 AWG (PINK/BROWN) (2) #18 AWG (WHITE/ORANGE) AREA=0.0055 SQ. INCH (EACH)	PLENUM RATED: FPLP PAIGE 740132 AREA=0.0141 SQ. INCH
M	MAPNET/IDNET CIRCUIT – 1 PAIR 18 AWG TWISTED OVERALL SHIELD NON-PLENUM RATED: FPL PAIGE 740215 AREA=0.0196 SQ. INCH	NON-PLENUM RATED: FPLR PAIGE 740215 AREA=0.0196 SQ. INCH	PLENUM RATED: FPLP PAIGE 740214L AREA=0.0196 SQ. INCH
N	RS-485 COMMUNICATION TRUNK – 1 PAIR 18 AWG TWISTED OVERALL SHIELD NON-PLENUM RATED: FPL PAIGE 740215 AREA=0.0196 SQ. INCH	NON-PLENUM RATED: FPLR PAIGE 740215 AREA=0.0196 SQ. INCH	PLENUM RATED: FPLP PAIGE 740214L AREA=0.0196 SQ. INCH
P	MAPNET/IDNET POWER CIRCUIT – 2 CONDUCTOR 14 AWG SOLID NON-PLENUM RATED: FPLR PAIGE 454718ARE AREA=0.0380 SQ. INCH	CONDUIT ONLY: THHN PAIGE 454314BR #14 AWG TP (BLACK/RED) AREA=0.0394 SQ. INCH	PLENUM RATED: FPLP PAIGE 454719ARE AREA=0.0333 SQ. INCH
R	RELAY CIRCUIT – 2 CONDUCTOR 14 AWG SOLID NON-PLENUM RATED: FPLR PAIGE 454718ARE AREA=0.0380 SQ. INCH	CONDUIT ONLY: THHN PAIGE 454314BR #14 AWG TP (BLACK/RED) AREA=0.0394 SQ. INCH	PLENUM RATED: FPLP PAIGE 454719ARE AREA=0.0333 SQ. INCH
V	VISUAL/SIGNAL CIRCUIT – 2 CONDUCTOR 12 AWG STRANDED NON-PLENUM RATED: FPLR PAIGE 454676ARE AREA=0.0661 SQ. INCH	CONDUIT ONLY: THHN (2) #12 AWG (RED/BLACK) AREA=0.0133 SQ. INCH (EACH)	PLENUM RATED: FPLP PAIGE 454698ARE AREA=0.0483 SQ. INCH

********* REFER TO SIGNAL CIRCUIT DISTANCE CHART *********

CONDUIT SIZE	CONDUCTOR AREA	CONDUIT SIZE	CONDUCTOR AREA
3/4"	0.21 SQ INCH *	1-1/4"	0.60 SQ INCH *
1"	0.34 SQ INCH *	1-1/2"	0.82 SQ INCH *
		2"	1.34 SQ INCH *

* 40% FILL PER N.E.C.

THE CABLES SPECIFIED HERE ARE FOR REFERENCE OF REQUIRED ELECTRICAL CHARACTERISTICS AS WELL AS CODE REQUIREMENTS. ALTERNATE SUPPLIERS MAY BE SUBSTITUTED PROVIDING EQUIVALENT CHARACTERISTICS ARE MAINTAINED. ITEMS SUCH AS CAPACITANCE BETWEEN CONDUCTORS AND WIRE GAUGE CAN BE CRUCIAL TO THE CIRCUIT DESIGN OF THIS SYSTEM INSTALLATION.

SYSTEM DESCRIPTION / SCOPE OF WORK

OCCUPANCY TYPE: B BUSINESS GROUP

SPRINKLER PROTECTION: BUILDING IS NOT SPRINKLED

MODIFY EXISTING FIRE ALARM SYSTEM: PROVIDE NEW DEVICES, RELOCATE AND DEMO EXISTING DEVICES AS SHOWN ON DRAWINGS.

ALL NEW WIRING TO BE CLASS B.

THE EXISTING FIRE ALARM SYSTEM SHALL NOT BE DISCONNECTED OR TAKEN OUT OF SERVICE WITHOUT WRITTEN PERMISSION FROM THE OWNER. IT IS THE CONTRACTOR'S RESPONSIBILITY TO COORDINATE WITH THE OWNER THE TIMING OF ANY EXISTING FIRE ALARM SYSTEM DEMOLITION WORK.

FIRE ALARM APPLICABLE CODES & STANDARDS

2010 FLORIDA FIRE PREVENTION CODE (NFPA 101, 2009 EDITION)

NATIONAL FIRE ALARM CODE (NFPA 72), 2007 EDITION

FLORIDA BUILDING CODE, 2010 EDITION (INTERNATIONAL BUILDING CODE (IBC) 2009 EDITION)

NATIONAL ELECTRICAL CODE (NEC, NFPA 70), 2008 EDITION

JURISDICTIONS WITHIN THE STATE MAY HAVE AMENDMENTS TO THE STATE ADOPTED CODE. CHECK WITH THE LOCAL JURISDICTION AUTHORITY FOR MORE DETAILS.

SYMBOL KEY

FIRE ALARM SYMBOLS LEGEND

SYMBOL	DESCRIPTION	MODEL#	BACKBOX
F	MANUAL PULL STATION	SIMPLEX 4099-9003	SINGLE GANG BOX 2 1/2" DEEP
AM	INDIVIDUAL ADDRESSABLE MODULE	SIMPLEX 4090-9001	SINGLE GANG BOX 2 1/2" DEEP WITH COVER
AOM	RELAY IAM	SIMPLEX 4090-9002	4" SQUARE BOX 2 1/8" DEEP W/TWO GANG COVER
	SMOKE SENSOR / BASE	SIMPLEX 4098-9714 SIMPLEX 4098-9792 BASE	4" OCTAGONAL BOX 1 1/2" DEEP
10K	HEAT SENSOR / BASE	SIMPLEX 4098-9733 SIMPLEX 4098-9792 BASE	4" OCTAGONAL BOX 1 1/2" DEEP
R	DUCT SMOKE SENSOR	SIMPLEX 4098-9756	MOUNT TO DUCTWORK W/4905-9937 ADAPTER SKIRT WHEN SURFACE MOUNTED
	REMOTE TEST STATION W/ LED AND KEY SWITCH	SIMPLEX 2098-9806	SINGLE GANG BOX 2 1/2" DEEP W/4905-9937 ADAPTER SKIRT WHEN SURFACE MOUNTED
	WALL MOUNT MULTI-CANDELA A/V RED # =CANDELA RATING	SIMPLEX 4906-9127	4" SQUARE BOX 1 1/2" DEEP W/4905-9937 ADAPTER SKIRT WHEN SURFACE MOUNTED
	WALL MOUNT MULTI-CANDELA V/O RED # =CANDELA RATING	SIMPLEX 4906-9101	4" SQUARE BOX 1 1/2" DEEP W/4905-9937 ADAPTER SKIRT WHEN SURFACE MOUNTED
xxx	END-OF-LINE RESISTOR 3.3K (EOL) END-OF-LINE RESISTOR 4.7K (EOL) END-OF-LINE RESISTOR 6.8K (EOL) END-OF-LINE RESISTOR 10K (EOL)	SIMPLEX 4081-9002 SIMPLEX 4081-9003 SIMPLEX 4081-9004 SIMPLEX 4081-9008	SUPPLIED BY OTHERS
FATC	FIRE ALARM TERMINAL CABINET	SUPPLIED BY OTHERS	SUPPLIED BY OTHERS
JB	JUNCTION/PULL BOX	SUPPLIED BY OTHERS	SUPPLIED BY OTHERS
VS	TAMPER SWITCH	SUPPLIED BY OTHERS	INSTALLED BY MECHANICAL CONTRACTOR
WF	WATERFLOW SWITCH	SUPPLIED BY OTHERS	INSTALLED BY MECHANICAL CONTRACTOR
FAA	FIRE ALARM ANNUNCIATOR PANEL	SIMPLEX 4606-9102	6 GANG BOX 3 1/2" DEEP
FACP	FIRE ALARM CONTROL PANEL W / 12AH BATTERY SET	SIMPLEX 4010-9401 SIMPLEX 2081-9288	SUPPLIED BY SIMPLEXGRINNELL

ABBREVIATIONS LEGEND

AC = ABOVE CEILING
C = CEILING MOUNTED
E = EXISTING TO REMAIN
RC = EXISTING TO REMOVE AND COVER
RD = EXISTING DEVICE TO BE RELOCATED
RL = RELOCATED DEVICE
RR = REMOVE EXISTING AND REPLACE W/NEW
WP = WEATHERPROOF
XP = EXPLOSION PROOF

AFF = ABOVE FINISHED FLOOR
AHJ = AUTHORITY HAVING JURISDICTION
ALM = ALARM
ANN = ANNUNCIATOR
BMS = BUILDING MANAGEMENT SYSTEM
CBC = CALIFORNIA BUILDING CODE
CD = (eg. 15CD) CANDELA
CSFM = CALIFORNIA STATE FIRE MARSHALL
DET = DETECTOR
DGP = DATA GATHERING PANEL
EOL = END OF LINE
EPO = EMERGENCY POWER OFF
FACP = FIRE ALARM CONTROL PANEL
FATC = FIRE ALARM TERMINAL CABINET
FBO = FURNISHED BY OTHERS
FCC = FIRE COMMAND CENTER
FAA = FIRE ALARM ANNUNCIATOR
FTR = FIRE ALARM TRANSPONDER
FSD = FIRE SMOKE DAMPER

HT = HEIGHT
HVAC = HEATING, VENTILATION, & AIR CONDITIONING
IMS = INFORMATION MANAGEMENT SYSTEM
MAX = MAXIMUM
MIN = MINIMUM
N/A = NOT APPLICABLE
NAC = NOTIFICATION APPLIANCE CIRCUIT EXTENDER
NDU = NETWORK DISPLAY UNIT
NEC = NATIONAL ELECTRICAL CODE
NFPA = NATIONAL FIRE PROTECTION ASSOCIATION
NIC = NOT IN CONTRACT
NPU = NETWORK PROCESSING UNIT
NTS = NOT TO SCALE
PAP = PRE-ACTION PANEL
SCC = STATUS COMMAND CENTER
SLC = SIGNALING LINE CIRCUIT
SMK = SMOKE
SUPV = SUPERVISORY
TAC = TRUEALERT ADDRESSABLE CONTROLLER
TRBL = TROUBLE
TS = TAMPER SWITCH
TYP = TYPICAL
UON = UNLESS OTHERWISE NOTED
VCC = VOICE COMMAND CENTER
VT = VALVE TAMPER
WF = WATER FLOW
W = (eg. 1/2W) WATT
W/ = WITH
W/O = WITH OUT

DEVICE ADDRESSING LEGEND

ADDRESSABLE CARD (IDNET OR MAPNET)
NODE DESIGNATOR
DEVICE ADDRESS

N1:M2-1

ADDRESSABLE DEVICES NUMBERING

CIRCUIT DESIGNATOR
V=VISUAL OR A/V, H=AUDIBLE ONLY)
DEVICE DESIGNATOR

V2-1

VISUAL, AUDIBLE OR A/V DEVICE

GENERAL FIRE ALARM SYSTEM NOTES

1. THESE DRAWINGS DEPICT GENERAL LOCATIONS OF LIFE SAFETY EQUIPMENT & FIELD DEVICES. EXACT ROUTING OF CONDUITS TO BE DETERMINED IN THE FIELD BY THE INSTALLING CONTRACTOR TO SUIT CONDITIONS. ALL CHANGES SHALL BE CLEARLY INDICATED ON THE RECORD DRAWINGS.
2. SHOULD ANY CONDITIONS EXIST THAT DIFFER FROM WHAT IS INDICATED ON THESE DRAWINGS WHICH CAUSE MAJOR DEVIATIONS IN THE WORK SHOWN, THE CONTRACTOR SHALL CONTACT SIMPLEXGRINNELL IN A TIMELY MANNER SO AS NOT TO IMPAIR THE CONSTRUCTION SCHEDULE.
3. CONTRACTOR IS RESPONSIBLE FOR MAKING AND OBTAINING APPROVAL FOR ALL NECESSARY ADJUSTMENTS IN CIRCUITING AS REQUIRED TO ACCOMMODATE THE RELOCATION OF EQUIPMENT AND/OR DEVICES WHICH ARE AFFECTED BY ANY AUTHORIZED CHANGE. ALL CHANGES SHALL BE CLEARLY INDICATED ON THE RECORD DRAWINGS.
4. A STAMPED SET OF APPROVED FIRE ALARM DRAWINGS SHALL BE AT THE JOB SITE AND SHALL BE USED FOR INSTALLATION.
5. THE POWER CIRCUIT TO THE FACP AND TO THE FIRE ALARM POWER SUPPLIES SHALL BE ON A DEDICATED 120V, 20A BRANCH CIRCUIT BREAKER, AND SHALL HAVE A RED MARKING, LOCK-ON PROVISION AND SHALL BE IDENTIFIED AS "FIRE ALARM CIRCUIT CONTROL." THE LOCATION OF THE CIRCUIT DISCONNECT MEANS (CIRCUIT BREAKER) SHALL BE PERMANENTLY IDENTIFIED AT THE FIRE ALARM CONTROL UNIT.
6. UPDATE THE AS-BUILT DRAWING SET DAILY WITH JOB PROGRESS. RETURN THE AS-BUILT DRAWING SET TO SIMPLEXGRINNELL NO LATER THAN 7 DAYS AFTER FINAL TEST.
7. THE CONTRACTOR WILL MAINTAIN ALL AREAS OF THE BUILDING IN A NEAT AND WORKMAN LIKE MANNER.
8. DO NOT APPLY POWER EXCEPT IN THE PRESENCE OF A FACTORY TRAINED SIMPLEXGRINNELL TECHNICAL REPRESENTATIVE.
9. ANY SMOKE DETECTOR HEAD INSTALLED BEFORE THE BUILDING IS CLEANED AND ACCEPTED SHALL BE COVERED TO PROTECT FROM DUST. ANY FALSE ALARMS DUE TO DIRT CONTAMINATED HEADS SHALL BE THE RESPONSIBILITY OF THE FIRE ALARM INSTALLER.
10. THE FIRE ALARM INSTALLER WILL MAINTAIN THE FIRE RESISTANCE INTEGRITY OF ALL WALL, CEILING, AND ROOF ASSEMBLIES ANY TIME THAT WORK IS NOT ACTIVELY BEING PERFORMED.
11. INSTALLATION OF DEVICES SHALL BE IN ACCORDANCE WITH MANUFACTURER'S INSTRUCTIONS. POWER LIMITED AND NON-POWER LIMITED FIELD WIRING MUST BE INSTALLED WITHIN THE FACP ENCLOSURE IN ACCORDANCE WITH MANUFACTURER'S INSTRUCTIONS AND NEC.
12. ALL WIRING SHALL BE INSTALLED ACCORDING TO NFPA 70 (NEC).
13. FIRE ALARM CIRCUITS SHALL BE IDENTIFIED IN ACCORDANCE WITH APPROPRIATE SECTION OF NEC 760. MARK ALL FIRE ALARM WIRES IN ACCORDANCE WITH NEC 760 SECTIONS FOR POWER LIMITED AND NON-POWER LIMITED WIRE.
14. FIRE ALARM CABLE INSTALLED IN DUCTS, PLENUM, AND OTHER SPACES USED FOR ENVIRONMENTAL AIR SHALL BE TYPE FPLP.
15. FIRE ALARM CABLE INSTALLED IN THE VERTICAL RUNS AND PENETRATE MORE THAN ONE FLOOR OR CABLES INSTALLED IN VERTICAL RUNS IN SHAFTS SHALL BE TYPE FPLR.
16. FIRE ALARM CABLE INSTALLED IN UNDERGROUND CONDUIT OR OTHER WET LOCATIONS SHALL BE UL LISTED FOR WET LOCATIONS.
17. FIRE ALARM CIRCUITS EXTENDING BEYOND ONE BUILDING AND RUN OUTDOOR SHALL BE INSTALLED IN ACCORDANCE WITH NFPA 70 ARTICLES 760, 770, 725 AND 800 WHERE APPLICABLE.
18. ALL WIRING, INCLUDING SHIELDS MUST BE DRY AND FREE OF SHORTS AND GROUNDS.
19. ALL SHIELDED WIRE MUST HAVE SHIELD CONTINUITY AT FULL LENGTH OF THE WIRE.
20. ONLY SYSTEM WIRING CAN BE RUN IN THE SAME CONDUIT.
21. 120VAC IS NOT PERMITTED IN THE SAME CONDUIT WITH LOW VOLTAGE WIRING.
22. MAINTAIN 40 PERCENT CONDUIT FILL RATIO AS PER NEC REQUIREMENTS.
23. EXISTING CONDUITS MAY BE USED BY THE INSTALLATION CONTRACTOR AS DEEMED NECESSARY, HOWEVER, ANY EXISTING CONDUIT WILL BE USED ONLY IF CONDUITS MEET CURRENT STANDARDS AND CODES. SIMPLEXGRINNELL MAKES NO STATEMENTS WRITTEN OR VERBAL AS TO THE CONDITION OF EXISTING CONDUITS.

REQUEST FOR PROPOSAL

NO.	DATE	ISSUED FOR	BY
1	07/24/15	REQUEST FOR PROPOSAL	G.A.B.

DESIGNED J.C.B.
DRAWN J.M.B.
CHECKED J.C.B.
PROJ. ENGR. J.C.B.

JOHN C. BURKE P.E.
No. 17301

HAZEN AND SAWYER
Environmental Engineers & Scientists
4000 Hollywood Boulevard, Suite 750N
Hollywood, Florida 33021
Certificate of Authorization Number: 2771

SCALE –

CLIENTS PROJECT: –
ENGINEERS PROJECT: 44238-004
CAD REFERENCE: 44238-004BP3-E19

NORTH MIAMI FLORIDA
CITY OF NORTH MIAMI
PUBLIC WORKS UTILITIES

WINSON WATER TREATMENT PLANT
RELIABILITY IMPROVEMENTS – VOLUME C: WTP REHAB
NEW ADMINISTRATION BUILDING FIRE ALARM NOTES AND LEGENDS

DATE: JULY 2015
SHEET: 258 OF 335
DRAWING: E-19

PLOT DATE: 7/24/2015 4:36 PM BY: TBOCAS
XREFs= ..\Tblock\44238-004-BP3-TB
File = H:\44238-004\Drawings\design build package\volume c - wtp rehab\Bid Package 3 - WTP Rehab\Electrical\44238-004BP3-E19 Saved by tbocas Save date = 5/18/2015 11:14 AM

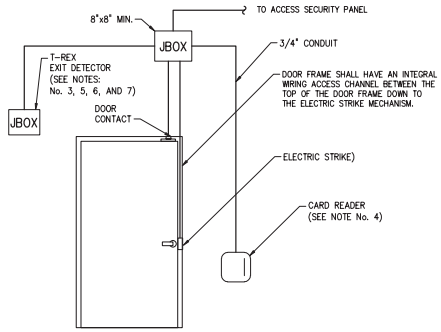

TYPICAL SINGLE DOOR STRIKE CONDUIT DETAIL

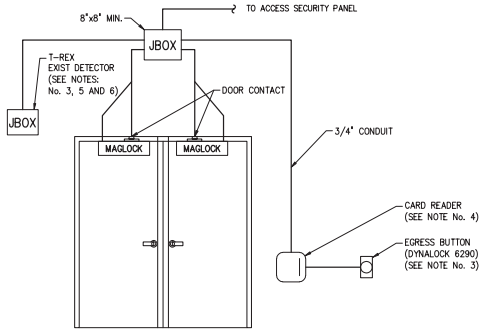

TYPICAL DOUBLE DOOR MAGLOCK CONDUIT DETAIL

NOTES:

1. ALL BOXES 2"x4" UNLESS OTHERWISE NOTED.
2. ALL CONDUIT 3/4" MINIMUM UNLESS OTHERWISE NOTED OR REQUIRED BY SEC SYSTEM PROVIDER.
3. MOUNTS ON SECURED SIDE OF DOOR. REQUIRED WITH MAGLOCK EQUIPMENT.
4. MOUNTS ON UNSECURED SIDE OF DOOR.
5. MOUNTS TO SIDE OF DOORWAY.
6. MOUNT HORIZONTALLY.
7. OPTIONAL FOR DOORS SECURED WITH A STRIKE MECHANISM.

SCOPE OF WORK

1. INSTALL KEYSCAN ACCESS CONTROL SYSTEM PER NFPA 101 AS AMENDED BY THE FLORIDA FIRE PREVENTION CODE (LATEST EDITION) AND NATIONAL ELECTRICAL CODE ON INTERIOR AND EXTERIOR DOORS AS DEPICTED ON THE DRAWINGS.
2. FURNISH AND INSTALL NEW VIDEO SURVEILLANCE SYSTEM AS DEPICTED ON THE DRAWINGS. MODIFY EXISTING VIDEO SURVEILLANCE SYSTEM AS DEPICTED ON THE DRAWINGS. ALL CABLE FROM VIDEO CAMERAS SHALL BE SUPPLIED BY THE SECURITY SYSTEM SUPPLIER.
3. FURNISH AND INSTALL PERIMETER GATE ACCESS CONTROL SYSTEM AS DEPICTED ON THE DRAWINGS.
4. ALL OTHER WORK REQUIRED FOR A COMPLETE AND OPERABLE SYSTEM.

ACCESS CONTROL NOTES:

1. CONTRACTOR TO FURNISH AND INSTALL ALL CABLE, CONDUIT AND AC POWER WHERE REQUIRED.
2. ALL CABLES SHALL BE ROUTED FROM EACH DEVICE TO THE ACCESS CONTROL SYSTEM CONTROLLER AS PROPOSED ON DRAWING E-21
3. ALL ELECTRIFIED DOOR HARDWARE TO BE SUPPLIED BY DIVISION 8 OF THE SPECIFICATIONS.
4. ALL ELECTRIFIED DOOR HARDWARE TO BE 24VDC.
5. DOUBLE MAG LOCK SHOULD COME EQUIPPED WITH DOOR STATUS MODULE AND MAGNETIC BOND SENSOR (MBS) OPTIONS.
6. DOORS WITH ELECTRIC STRIKES WILL REQUIRE A STOREROOM FUNCTION LOCKSET-TO BE SUPPLIED BY DIVISION 8 OF THE SPECIFICATIONS.

COMPLIANCE WITH FLORIDA FIRE PREVENTION CODE (NFPA 101)

ARTICLE 7.2.1.6.2: ACCESS CONTROLLED EGRESS DOOR ASSEMBLIES:

WHERE PERMITTED IN CHAPTERS 11 THROUGH 43, DOOR ASSEMBLIES IN THE MEANS OF EGRESS SHALL BE PERMITTED TO BE EQUIPPED WITH AN APPROVED ENTRANCE AND EGRESS ACCESS CONTROL SYSTEM, PROVIDED THAT ALL THE FOLLOWING CRITERIA ARE MET:

(1) A SENSOR SHALL BE PROVIDED ON THE EGRESS SIDE, ARRANGED TO DETECT AN OCCUPANT APPROACHING DOOR LEAVES THAT ARE ARRANGED TO UNLOCK IN THE DIRECTION OF EGRESS UPON DETECTION OF AN APPROACHING OCCUPANT OR LOSS OF POWER TO THE SENSOR.

(2) LOSS OF POWER TO THE PART OF THE ACCESS CONTROL SYSTEM THAT LOCKS THE DOOR LEAVES SHALL AUTOMATICALLY UNLOCK THE DOOR LEAVES IN THE DIRECTION OF EGRESS.

(3) DOOR LEAVES SHALL BE ARRANGED TO UNLOCK IN THE DIRECTION OF EGRESS FROM A MANUAL RELEASE DEVICE LOCATED 40 TO 48 INCHES VERTICALLY ABOVE THE FLOOR AND WITHIN 60 INCHES OF THE SECURED DOOR OPENINGS.

(4) THE MANUAL RELEASE DEVICE SPECIFIED IN 7.2.1.6.2(3) SHALL BE READILY ACCESSIBLE AND CLEARLY IDENTIFIED BY A SIGN THAT READS AS FOLLOWS: PUSH TO EXIT.

(5) WHEN OPERATED, THE MANUAL RELEASE DEVICE SHALL RESULT IN DIRECT INTERRUPTION OF POWER TO THE LOCK – INDEPENDENT OF THE ACCESS CONTROL SYSTEM ELECTRONICS – AND THE DOOR LEAVES SHALL REMAIN UNLOCKED FOR NOT LESS THAN 30 SECONDS.

(6) ACTIVATION OF THE BUILDING FIRE-PROTECTIVE SIGNALING SYSTEM, IF PROVIDED, SHALL AUTOMATICALLY UNLOCK THE DOOR LEAVES IN THE DIRECTION OF EGRESS, AND THEY SHALL REMAIN UNLOCKED UNTIL THE FIRE-PROTECTIVE SIGNALING SYSTEM HAS BEEN MANUALLY RESET.

(7) THE ACTIVATION OF MANUAL FIRE ALARM BOXES THAT ACTIVATE THE BUILDING FIRE-PROTECTIVE SIGNALING SYSTEM SPECIFIED IN 7.2.1.6.2(6) SHALL NOT BE REQUIRED TO UNLOCK THE DOOR LEAVES.

(8) ACTIVATION OF THE BUILDING AUTOMATIC SPRINKLER OR FIRE DETECTION SYSTEM, IF PROVIDED, SHALL AUTOMATICALLY UNLOCK THE DOOR LEAVES IN THE DIRECTION OF EGRESS, AND THEY SHALL REMAIN UNLOCKED UNTIL THE FIRE-PROTECTIVE SIGNALING SYSTEM HAS BEEN MANUALLY RESET.

NO.	DATE	ISSUED FOR	BY
1	07/24/15	REQUEST FOR PROPOSAL	G.A.B.

DESIGNED G.A.B.
DRAWN G.P.B.
CHECKED J.N.M.
PROJ. ENGR. G.A.B.

JOHN C. BURKE P.E.
No. 17301

HAZEN AND SAWYER
Environmental Engineers & Scientists
4000 Hollywood Boulevard, Suite 750N
Hollywood, Florida 33021
Certificate of Authorization Number: 2771

SCALE 3/4"=1'-0"

CLIENTS PROJECT: –
ENGINEERS PROJECT: 44238-004
CAD REFERENCE: 44238-004BP3-E20

NORTH MIAMI FLORIDA
CITY OF NORTH MIAMI
PUBLIC WORKS UTILITIES

WINSON WATER TREATMENT PLANT
RELIABILITY IMPROVEMENTS – VOLUME C: WTP REHAB
SECURITY ACCESS
ELECTRICAL DETAILS
SHEET 1

DATE: JULY 2015
SHEET: 259 OF 335
DRAWING: E-20

REQUEST FOR PROPOSAL

PLOT DATE: 7/24/2015 4:36 PM BY: TBOCAS

XREFs= ..\Tblock\44238-004-BP3-TB,..\Base-BP3\S-BP3-FlowMeter-IntermediatePlan,..\Base-BP3\M-BP3-FlowMeter-IntermediatePlan

File = H:\44238-004\Drawings\design build package\volume c - wtp rehab\Bid Package 3 - WTP Rehab\Electrical\44238-004BP3-E20 Saved by HScalll Save date = 6/6/2014 5:28 PM

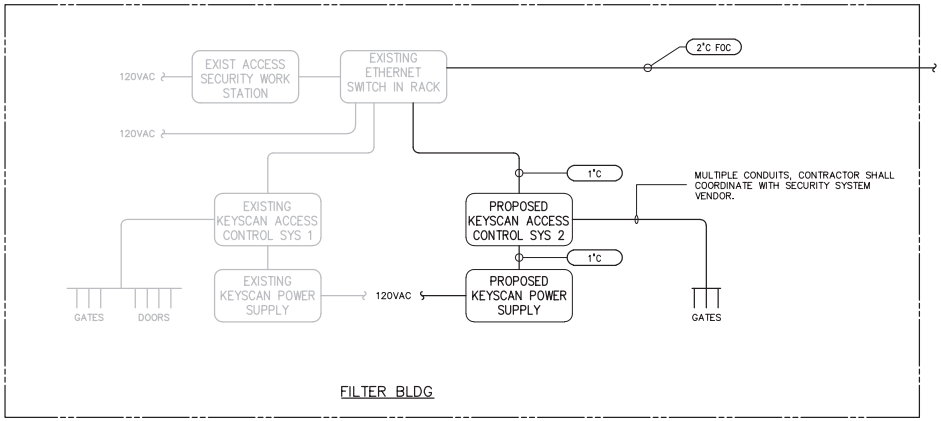

SEE DRAWING E-40 FOR SCHEDULE OF GATES TO BE TERMINATED AT THESE KEYSCAN ACCESS CONTROL PANELS

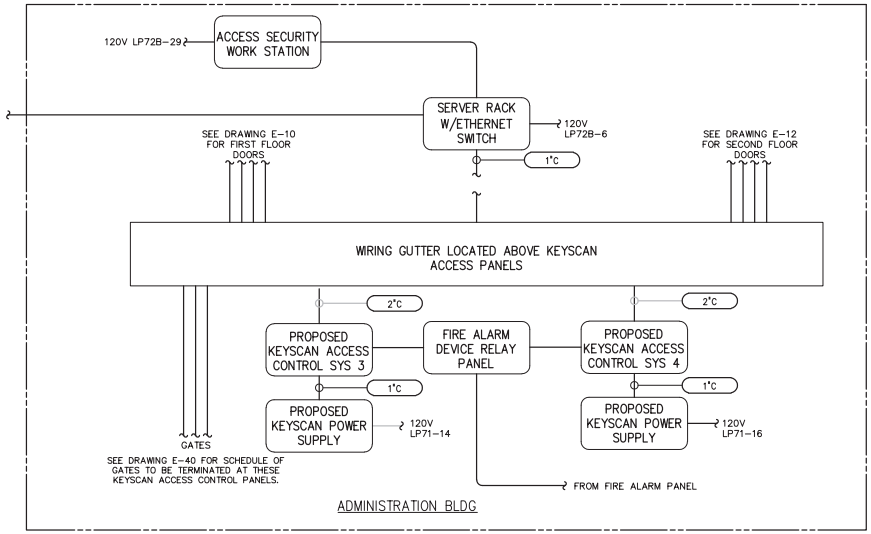

SEE DRAWING E-40 FOR SCHEDULE OF GATES TO BE TERMINATED AT THESE KEYSCAN ACCESS CONTROL PANELS.

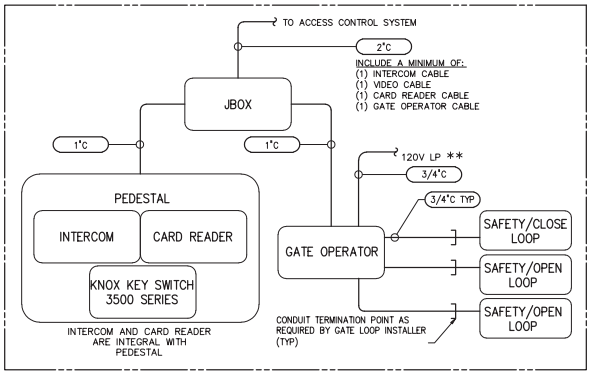

PROPOSED GATE ACCESS
CONTROL RISER (TYPICAL FOR EACH OF 5 GATES)

** SEE DRAWING E-40 FOR GATE EQUIPMENT POWER SOURCE

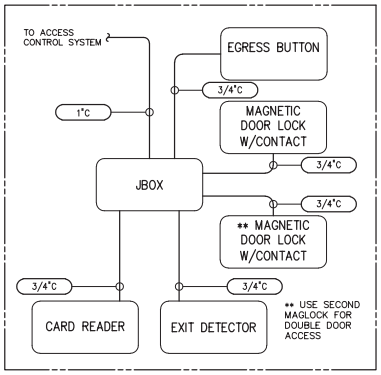

SINGLE AND DOUBLE DOOR
MAGNETIC ACCESS CONTROL RISER

SEE DRAWING E-10 FOR FIRST FLOOR DOORS
SEE DRAWING E-12 FOR SECOND FLOOR DOORS

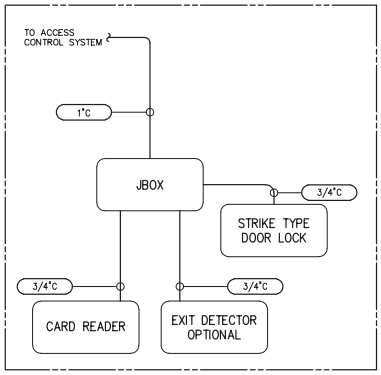

SINGLE DOOR
STRIKE ACCESS CONTROL RISER

NO.	DATE	ISSUED FOR	BY
1	07/24/15	REQUEST FOR PROPOSAL	G.A.B.

DESIGNED G.A.B.
DRAWN G.P.B.
CHECKED J.N.M.
PROJ. ENGR. G.A.B.

JOHN C. BURKE P.E.
No. 17301

HAZEN AND SAWYER
Environmental Engineers & Scientists
4000 Hollywood Boulevard, Suite 750N
Hollywood, Florida 33021
Certificate of Authorization Number: 2771

SCALE NTS

CLIENTS PROJECT: –
ENGINEERS PROJECT: 44238-004
CAD REFERENCE: 44238-004BP3-E21

NORTH MIAMI FLORIDA
CITY OF NORTH MIAMI
PUBLIC WORKS UTILITIES

WINSON WATER TREATMENT PLANT
RELIABILITY IMPROVEMENTS – VOLUME C: WTP REHAB
SECURITY ACCESS
ELECTRICAL DETAILS
SHEET 2

DATE: JULY 2015
SHEET: 260 OF 335
DRAWING: E-21

REQUEST FOR PROPOSAL

PLOT DATE: 7/24/2015 4:36 PM BY: TBOCAS

XREFs= ..\Tblock\44238-004-BP3-TB,..\44238-004BP3-E08,..\Base-BP3\S-BP1-Filters-Plan-Bottom-X,..\Base-BP3\M-BP1-Filters-Plan-Bottom-X

File = H:\44238-004\Drawings\design build package\volume c - wtp rehab\Bid Package 3 - WTP Rehab\Electrical\44238-004BP3-E21 Saved by HScall1 Save date = 6/6/2014 5:28 PM