EXHIBIT 1-3

NORTH MIAMI WINSON WATER TREATMENT PLANT

FINISHED WATER QUALITY DATA FROM ROUTINE COMPLIANCE TESTING AND WTP MONTHLY OPERATION REPORTS

Florida Department of Environmental Protection
Safe Drinking Water Program Laboratory Reporting Format

\

INSTRUCTIONS

This format is to be used by laboratories for reporting drinking water analyses to the appropriate Department of Environmental Protection (DEP) or Health Department offices (see below). For analysis results to be acceptable for compliance with Chapter 62-550, F.A.C., laboratories performing the analyses must be certified for those analayses in drinking water by the Florida Department of Health (DOH) and report results in accordance with Chapter 62-160, F.A.C. Computer generated or otherwise personalized reports will be accepted as long as they conform to this format, with the results reported using the same groups with the same contaminant IDs, contaminant names, units, column headings, and in the same order as in this format.

The contaminants shown in this example are those named in Rule 62-550, F.A.C. Other contaminants may be reported using this format as long as the contaminant IDs and names are the same as those found in the Safe Drinking Water Act. When applicable, results shall be reported using the data qualifier codes specified in the attached Table 1 of Rule 62-160, F.A.C. Parameters not reported need not be listed. Multiple samples for the same parameter can be reported under the same cover sheet as long as the sample locations are specific. Likewise, composite samples must be so identified so that if samples are from multiple plants and/or systems, credit for compliance will be given to all the plants/systems. Radionuclides samples that have been composited over time (multiple quarters) also have to be clearly identified so that proper credit for compliance will be given.

Send completed reports to the DEP District Office or DOH Health Dept. office which has jurisdiction over the water system. The 7-character PWS ID must be included on the report.

Northwest DEP District Office……. 160 Governmental Center, Pensacola, FL, 32502-5794……850.595-8300
Northeast DEP District Office ……. 7825 Baymeadows Way, Suite 200B, Jacksonville, FL, 32256-7590……904.807-3300
Central DEP District Office …….. 3319 Maguire Blvd., Suite 232, Orlando, FL, 32803-3767…… 407.894-7555
Southeast DEP District Office ……. 400 N. Congress Ave., Suite 200, West Palm Beach, FL, 33416…… 561.681-6600
Southeast DEP District Branch Office ……1801 S.E. Hillmoor Dr., Suite C-204, Port St. Lucie, FL, 34952…… 772.398-2806
South DEP District Office …… P.O. Box 2549, Ft. Myers, FL, 33902-2549 …… 239.332-6975
Southwest DEP District Office …… 13051 N. Telecom Parkway, Temple Terrace, FL, 33637…… 813.632-7600

Broward County Health Department ……2421 S.W. 6th Ave., Ft. Lauderdale, FL, 33315…… 954.467-4854
Dade County Health Department …… 1725 N.W. 167th St., Suite 119, Miami, FL, 33056…… 305.623-3552
Hillsborough County Health Department ……P.O. Box 5135, Tampa, FL, 33675-5135…… 813.307-8059
Lee County Health Department …… .60 Danley Dr., Unit 1, Ft. Myers, FL, 33907 …… 239.274-2200
Manatee County Health Department …….. .Environmental Health, 410 6th Avenue East, Bradenton, FL, 34208…… 941.748-0747
Palm Beach County Health Department…... .P.O. Box 29, West Palm Beach, FL, 33402 …… 561.837-5900
Polk County Health Department…… .1290 Golfview Ave., 4th Floor, Bartow, FL, 33830…… 863.519-8330
Sarasota County Health Department ……1301 Cattleman Road, Sarasota, FL, 34232…… 941.378-6133
Volusia County Health Department……Environmental Engineering – Bin #180, Box 9190, Daytona Beach, FL, 32120-9190….. 386.736-5436

Florida Department of Environmental Protection
Safe Drinking Water Program Laboratory Reporting Format

DATA QUALIFIER CODES (From 62-160, Table 1)

The following qualifier codes shall be used by laboratories when reporting data values that either meet the specified descriptions outlined below or do not meet the quality control criteria of the laboratory. They are categorized on these 2 pages as Acceptable, Not Acceptable, or May Be Acceptable for compliance.

The following codes (B,D,E,I,K.L,M,U,V,!) **ARE ACCEPTABLE** for use with results submitted for compliance with 62-550 and 62-555.	
SYMBOL	MEANING
B	Results based upon colony counts outside the acceptable range. Applies to microbiological tests and specifically to membrane filter colony counts. It is to be used if the colony count is generated from a plate in which the total number of coliform colonies is outside the method indicated ideal range. This code is not to be used if a 100 mL sample has been filtered and the colony count is less than the lower value of the ideal range.
D	Measurement was made in the field (i.e., in situ). This code applies to any value (except field measurements of pH, specific conductance, dissolved oxygen, temperature, total residual chlorine, transparency, turbidity or salinity) that was obtained under field conditions using approved analytical methods. If the parameter code specifies a field measurement (e.g., "Field pH"), this code is not required.
E	Indicates that extra samples were taken at composite stations.
I	The reported value is greater than or equal to the laboratory method detection limit but less than the laboratory practical quantitation limit.
K	Off-scale low. Actual value is known to be less than the value given. This code shall be used if the value is less than the lowest calibration standard and the calibration curve is known to be non-linear; or the value is known to be less than the reported value based on sample size, dilution. Shall not be used to report values that are less than the laboratory practical quantitation limit or laboratory method detection limit.
L	Off-scale high. Actual value is known to be greater than value given. To be used when the concentration of the analyte is above the acceptable level for quantitation (exceeds the linear range or highest calibration standard) and the calibration curve is known to exhibit a negative deflection.
M	When reporting chemical analyses: presence of material is verified but not quantified; the actual value is less than the value given. The reported value shall be the laboratory practical quantitation limit. This code shall be used if the level is too low to permit accurate quantification, but the estimated concentration is greater than or equal to the method detection limit. If the value is less than the method detection limit use "T" below.
U	Indicates that the compound was analyzed for but not detected. This symbol shall be used to indicate that the specified component was not detected. The value associated with the qualifier shall be the laboratory method detection limit. Unless requested by the client, less than the method detection limit values shall not be reported (see "T" below).
V	Indicates that the analyte was detected at or above the method detection limit in both the sample and the associated method blank and the value of 10 times the blank value was equal to or greater than the associated sample value. Note: unless specified by the method, the value in the blank shall not be subtracted from associated samples.
!	Data deviate from historically established concentration ranges.
The following codes (A,F,H,N,O,T,Z,?,*) are **NOT ACCEPTABLE** for use with results submitted for compliance with 62-550 and 62-555.	
A	Value reported is the arithmetic mean (average) of two or more determinations. This code shall be used if the reported value is the average of results for two or more discrete and separate samples. These samples shall have been processed and analyzed independently. Do not use this code if the data are the result of replicate analysis on the same sample aliquot, extract or digestate.
F	When reporting species: F indicates the female sex.
H	Value based on field kit determination; results may not be accurate. This code shall be used if a field screening test (i.e., field gas chromatograph data, immunoassay, vendor-supplied field kit, etc.) was used to generate the value and the field kit or method has not been recognized by the Department as equivalent to laboratory methods.

Florida Department of Environmental Protection
Safe Drinking Water Program Laboratory Reporting Format

DATA QUALIFIER CODES (From 62-160, Table 1)
CONTINUED

N	Presumptive evidence of presence of material. This qualifier shall be used if the component has been tentatively identified based on mass spectral library search; or there is an indication that the analyte is present, but quality control requirements for confirmation were not met (i.e., presence of analyte was not confirmed by alternative procedures).
O	Sampled, but analysis lost or not performed.
T	Value reported is less than the laboratory method detection limit. The value is reported for informational purposes only and shall not be used in statistical analysis.
Z	Too many colonies were present for accurate counting. Historically, this condition has been reported as "too numerous to count" (TNTC). The "Z" qualifier code shall be reported when the total number of colonies of all types is more than 200 in all dilutions of the sample. When applicable to the observed test results, a numeric value for the colony count for the microorganism tested shall be estimated from the highest dilution factor (smallest sample volume) used for the test and reported with the qualifier code.
?	Data are rejected and should not be used. Some or all of the quality control data for the analyte were outside criteria, and the presence or absence of the analyte cannot be determined from the data.
*	Not reported due to interference.
The following codes (J,Q,R,Y) **MAY OR MAY NOT BE ACCEPTABLE** for use with results submitted for compliance with 62-550 and 62-555, depending on the parameter(s) and/or the circumstances. Results with these codes will be evaluated on a case by case basis.	
SYMBOL	MEANING
J	Estimated value. A "J" value shall be accompanied by a detailed explanation for designating the value as estimated. Where possible, the lab shall report whether the actual value is estimated to be less than or greater than the reported value. A "J" value shall not be used as a substitute for K, L, M, T, V, or Y, however, if additional reasons exist for identifying the value as an estimate (e.g., matrix spiked failed to meet acceptance criteria), the "J" code may be added to a K, L, M, T, V, or Y. Examples of situations in which a "J" code must be reported include: instances where a quality control item associated with the reported value failed to meet the established quality control criteria (the specific failure must be identified); instances when the sample matrix interfered with the ability to make any accurate determination; instances when data are questionable because of improper laboratory or field protocols (e.g., composite sample was collected instead of a grab sample); instances when the analyte was detected at or above the method detection limit in a blank other than the method blank (such as calibration blank or field-generated blanks and the value of 10 times the blank value was equal to or greater than the associated sample value); or instances when the field or laboratory calibrations or calibration verifications did not meet calibration acceptance criteria.
Q	Sample held beyond the accepted holding time. This code shall be used if the value is derived from a sample that was prepared or analyzed after the approved holding time restrictions for sample preparation or analysis.
R	Significant rain in the past 48 hours. (Significant rain typically involves rain in excess of 1/2 inch within the past 48 hours.) This code shall be used when the rainfall might contribute to a lower than normal value.
Y	The laboratory analysis was from an improperly preserved sample. The data may not be accurate.

Florida Department of Environmental Protection
Safe Drinking Water Program Laboratory Reporting Format

PUBLIC WATER SYSTEM INFORMATION (to be completed by sampler – please type or print legibly)

System Name: CITY OF NORTH MIAMI PWS I.D. #: **4130977**

System Type (check one): ☒Community ☐Nontransient Noncommunity ☐Transient Noncommunity

Address: 12098 NW 11 AVE

City: MIAMI ZIP Code: 33168

Phone # 305-953-2854 Fax #: _____ E-Mail Address: _____

SAMPLE INFORMATION (to be completed by sampler)

Sample Number: 15889-1 Sample Date: 10/17/11 Sample Time: 01:55 AM PM (Circle One)

Sample Location (be specific) : POE Location Code: _____

Disinfectant Residual (Required when reporting results for trihalomethanes and haloacetic acids): _____ mg/L Field pH: _____

Sample Type (Check Only One)

☐Distribution
☐Entry Point (to Distribution)
☐Plant Tap (not for compliance with 62-550)
☐Raw (at well or intake)
☐Max Residence Time
☐Ave Residence Time
☐Near First Customer

Reason(s) for Sample (Check all that apply)

☒Routine Compliance with 62-550
☐Confirmation of MCL Exceedance*
☐Composite of Multiple Sites**
☐Replacement (of Invalidated Sample)
☐Special (not for compliance with 62-550)
☐Clearance (permitting)
☐Other: _____

Sampling Procedure Used or Other Comments:

_____

*See 62-550.500(6) for requirements and restrictions. And 62-550.512(3) for nitrate or nitrite exceedances.

**See 62-550.550(4) for requirements and attach a results page for each site.

SAMPLER CERTIFICATION

I, ERIC RIGAUD (Print Name), _____ (Print Title), do HEREBY CERTIFY that the above public water system and sample collection information is complete and correct.

Signature: _____ Date: _____

Certified Operator #: _____ Phone #: 954-553-3817 Sampler's Fax #: _____

Sampler's E-mail: _____

Florida Department of Environmental Protection
Safe Drinking Water Program Laboratory Reporting Format

LABORATORY CERTIFICATION INFORMATION (to be completed by lab – please type or print legibly)

Lab Name: Environmemtal Reagent Service Inc. Florida DOH Certification #: E86563 Certification Expiration Date: June 30,2012

ATTACH CURRENT DOH ANALYTE SHEET*

Address: 3860 sw 30th AVENUE HOLLYWOOD FL 33312 Phone #: 954-316-8792

Were any analyses subcontracted? ☒ Yes ☐ No If yes, please provide DOH certification number(s): E83079

ATTACH DOH ANALYTE SHEET FOR EACH SUBCONTRACTED LAB*

ANALYSIS INFORMATION (to be completed by lab) Date Sample(s) Received: 10/17/11

PWS ID (From Page 1): 4130977 Sample Number (From Page 1): 15889-1 Lab Assigned Report # or Job ID: 15889-1

Group(s) Analyzed & Results attached for compliance with Chapter 62-550, F.A.C. (Check all that apply):

Inorganics	Synthetic Organics	Volatile Organics	Disinfection Byproducts	Radionuclides	Secondaries
☐ All Except Asbestos	☐ All 30	☐ All 21	☐ Trihalomethanes	☐ Single Sample	☐ All 14
☐ Partial	☐ All Except Dioxin	☐ Partial	☐ Haloacetic Acids	☐ Qtrly Composite**	☐ Partial
☐ Nitrate	☐ Partial		☐ Chlorite		
☐ Nitrite	☐ Dioxin Only		☐ Bromate		
☐ Asbestos					

LAB CERTIFICATION

I, Maria Allpiste (Print Name), Lab Director (Print Title), do HEREBY CERTIFY that all attached analytical data are correct and unless noted meet all requirements of the National Environmental Laboratory Accreditation Conference (NELAC).

Signature: _____ Date: _____

* Failure to provide a valid and current Florida DOH lab certification number and a current Analyte Sheet for the attached analysis results will result in rejection of the report, possible enforcement against the public water system for failure to sample, and may result in notification of the DOH Bureau of Laboratory Services.

** Please provide radiological sample dates & locations for each quarter.

CONFIRMATION & NOTIFICATION IS REQUIRED WITHIN 24 HRS FOR NITRATE OR NITRITE MCL EXCEEDANCES

NON-DETECTS ARE TO BE REPORTED AS THE MDL WITH A "U" QUALIFIER. **(Non-detects reported as "BDL" or with a "<" are not acceptable.)**

COMPLIANCE DETERMINATION (to be completed by DEP or DOH -- attach notes as necessary)

Sample Collection & Analysis Satisfactory: ☐ Yes ☐ No _____ Replacement Sample or Report Requested (circle or highlight group(s) above)

Person Notified: _____ Date Notified: _____ DEP/DOH Reviewing Official: _____

Florida Department of Environmental Protection
Safe Drinking Water Program Laboratory Reporting Format

INORGANIC CONTAMINANTS
62-550.310(1)

Report Number / Job ID: 15889-1

PWS ID (From Page 1): **4130977**

Contam ID	Contam Name	MCL	Units	Analysis Result	Qualifier*	Analytical Method	Lab MDL	Analysis Date	Analysis Time	DOH Lab Certification #
1040	Nitrate (as N)	10	mg/L	0.10		300.0	0.025	10/18/11	19:14	E83079
1041	Nitrite (as N)	1	mg/L	0.025	U	300.0	0.025	10/18/11	19:14	E83079
1005	Arsenic	0.010	mg/L	0.00050	U	200.8	0.00050	10/22/11	09:42	E83079
1010	Barium	2	mg/L	0.0034	U	200.8	0.0034	10/22/11	09:42	E83079
1015	Cadmium	0.005	mg/L	0.00050	U	200.7	0.00050	10/22/11	03:42	E83079
1020	Chromium	0.1	mg/L	0.0025	U	200.7	0.0025	10/22/11	03:42	E83079
1024	Cyanide	0.2	mg/L	0.0050	U	335.4	0.0050	10/20/11	16:16	E83079
1025	Fluoride	4.0	mg/L	0.604		4500FC	0.006	10/20/11	10:05	E86563
1030	Lead	0.015	mg/L	0.011		200.8	0.0010	10/22/11	09:42	E83079
1035	Mercury	0.002	mg/L	0.000020	U	245.1	0.000020	10/21/11	09:46	E83079
1036	Nickel	0.1	mg/L	0.0025	U	200.7	0.0025	10/22/11	03:42	E83079
1045	Selenium	0.05	mg/L	0.00050	U	200.8	0.00050	10/22/11	09:42	E83079
1052	Sodium	160	mg/L	23.3		200.7	0.50	10/22/11	03:42	E83079
1074	Antimony	0.006	mg/L	0.00050	U	200.8	0.00050	10/21/11	09:42	E83079
1075	Beryllium	0.004	mg/L	0.000050	U	200.8	0.00050	10/22/11	09:42	E83079
1085	Thallium	0.002	mg/L	0.00050	U	200.8	0.00050	10/22/11	09:42	E83079
1094	Asbestos	7 MFL	MFL							E

*Results must be reported with appropriate qualifiers in accordance with Florida Administrative Code Rule 62-160, Table 1. Results qualified with A, F, H, N, O, T, Z, ?, *, are unacceptable for compliance with 62-550. Results qualified with a J, Q, R, or Y must be accompanied by written justification and will be evaluated on a case by case basis. To avoid a monitoring violation, unacceptable results must be replaced with acceptable results from samples collected during the same monitoring period.

Florida Department of Environmental Protection
Safe Drinking Water Program Laboratory Reporting Format

SECONDARY CONTAMINANTS
62-550.320

Report Number / Job ID: 15889-1

PWS ID (From Page 1): **4130977**

Contam ID	Contam Name	MCL	Units	Analysis Result	Qualifier *	Analytical Method	Lab MDL	Analysis Date	Analysis Time	DOH Lab Certification #
1002	Aluminum	0.2	mg/L	0.050	U	200.7	0.050	10/22/11	03:42	E83079
1017	Chloride	250	mg/L	29.2		300	0.25	10/21/11	20:01	E83079
1022	Copper	1	mg/L	0.00093	U	200.8	0.00093	10/22/11	09:42	E83079
1025	Fluoride	2.0	mg/L	0.604		4500FC	0.006	10/20/11	10:05	E86563
1028	Iron	0.3	mg/L	0.020	U	200.7	0.020	10/22/11	03:42	E83079
1032	Manganese	0.05	mg/L	0.00069	U	200.8	0.00069	10/22/11	09:42	E83079
1050	Silver	0.1	mg/L	0.0025	U	200.7	0.0025	10/22/11	03:42	E83079
1055	Sulfate	250	mg/L	31.3		SM426	0.45	11/04/11	09:30	E86563
1095	Zinc	5	mg/L	0.010	U	200.7	0.010	10/22/11	03:42	E83079
1905	Color	15	CU	15		SM2120	1.0	10/20/11	15:30	E86563
1920	Odor	3	TON	1.0	U	SM2150B	1.0	10/19/11	13:13	E83079
1925	pH (field pH from page 1)	6.5 - 8.5		8.97		150.1	0.1	10/17/11	15:45	E83079
1930	Total Dissolved Solids	500	mg/L	176		SM2540C	1.0	10/18/11	16:00	E86563
2905	Foaming Agents	0.5	mg/L	0.059	U	SM5540C	0.059	10/19/11	10:30	E83079

*Results must be reported with appropriate qualifiers in accordance with Florida Administrative Code Rule 62-160, Table 1. Results qualified with A, F, H, N, O, T, Z, ?, *, are unacceptable for compliance with 62-550. Results qualified with a J, Q, R, or Y must be accompanied by written justification and will be evaluated on a case by case basis. To avoid a monitoring violation, unacceptable results must be replaced with acceptable results from samples collected during the same monitoring period.

Florida Department of Environmental Protection
Safe Drinking Water Program Laboratory Reporting Format

DISINFECTION BYPRODUCTS
62-550.310(3)

Report Number / Job ID: 15889-1

Disinfectant Residual (mg/L): _____

PWS ID (From Page 1): **4130977**

Contam ID	Contam Name	MCL	Units	Analysis Result	Qualifier*	Analytical Method	Lab MDL	Regulatory MRL**	Analysis Date	Analysis Time	DOH Lab Certification #
1009	Chlorite	1000	µg/L					20***			E
1011	Bromate	10	µg/L					5.0 or 1.0****			E

Contam ID	Contam Name	MCL	Units	Analysis Result	Qualifier*	Analytical Method	Lab MDL	Regulatory MRL**	Analysis Date	Analysis Time	DOH Lab Certification #
2450	Monochloroacetic Acid	N/A	µg/L					2.0			E
2451	Dichloroacetic Acid	N/A	µg/L					1.0			E
2452	Trichloroacetic Acid	N/A	µg/L					1.0			E
2453	Monobromoacetic Acid	N/A	µg/L					1.0			E
2454	Dibromoacetic Acid	N/A	µg/L					1.0			E
2456	Total Haloacetic Acids (HAA5)	60	µg/L					---			E

Contam ID	Contam Name	MCL	Units	Analysis Result	Qualifier*	Analytical Method	Lab MDL	Regulatory MRL**	Analysis Date	Analysis Time	DOH Lab Certification #
2941	Chloroform	N/A	µg/L	39.2		524.2	0.25	1.0	10/24/11	19:13	E83079
2942	Bromoform	N/A	µg/L	0.25	U	524.2	0.25	1.0	10/24/11	19:13	E83079
2943	Bromodichloromethane	N/A	µg/L	10.3		524.2	0.25	1.0	10/24/11	19:13	E83079
2944	Dibromochloromethane	N/A	µg/L	3.3		524.2	0.25	1.0	10/24/11	19:13	E83079
2950	Total Trihalomethanes (TTHM)	80	µg/L	52.8		524.2		---	10/24/11	19:13	E83079

** Laboratories are required to adhere to the minimum reporting level (MRL) requirements of 40 CFR 141.131(b)(2)(iv).

*** Applicable to monitoring as prescribed in 40 CFR 141.132.(b)(2)(i)(B) and (b)(2)(ii).

**** Laboratories that use EPA Methods 317.0 Revision 2.0, 326.0 or 321.8 must meet a 1.0 µg/L MRL for bromate.

NOTE: Do not round values. Report results to the accuracy, precision, and sensitivity of the analytical method used.

*Results must be reported with appropriate qualifiers in accordance with Florida Administrative Code Rule 62-160, Table 1. Results qualified with A, F, H, N, O, T, Z, ?, *, are unacceptable for compliance with 62-550. Results qualified with a J, Q, R, or Y must be accompanied by written justification and will be evaluated on a case by case basis. To avoid a monitoring violation, unacceptable results must be replaced with acceptable results from samples collected during the same monitoring period.

Florida Department of Environmental Protection
Safe Drinking Water Program Laboratory Reporting Format

VOLATILE ORGANICS
62-550.310(4)(a)

Report Number / Job ID: 15889-1

PWS ID (From Page 1): **4130977**

Contam ID	Contam Name	MCL	Units	Analysis Result	Qualifier*	Analytical Method	Lab MDL	RDL	Analysis Date	Analysis Time	DOH Lab Certification #
2378	1,2,4-Trichlorobenzene	70	µg/L	0.25	U	524.2	0.25	0.5	10/24/11	19:13	E83079
2380	cis-1,2-Dichloroethylene	70	µg/L	0.25	U	524.2	0.25	0.5	10/24/11	19:13	E83079
2955	Xylenes (total)	10,000	µg/L	0.25	U	524.2	0.25	0.5	10/24/11	19:13	E83079
2964	Dichloromethane	5	µg/L	0.25	U	524.2	0.25	0.5	10/24/11	19:13	E83079
2968	o-Dichlorobenzene	600	µg/L	0.25	U	524.2	0.25	0.5	10/24/11	19:13	E83079
2969	para-Dichlorobenzene	75	µg/L	0.25	U	524.2	0.25	0.5	10/24/11	19:13	E83079
2976	Vinyl Chloride	1	µg/L	0.25	U	524.2	0.25	0.5	10/24/11	19:13	E83079
2977	1,1-Dichloroethylene	7	µg/L	0.25	U	524.2	0.25	0.5	10/24/11	19:13	E83079
2979	trans-1,2-Dichloroethylene	100	µg/L	0.25	U	524.2	0.25	0.5	10/24/11	19:13	E83079
2980	1,2-Dichloroethane	3	µg/L	0.25	U	524.2	0.25	0.5	10/24/11	19:13	E83079
2981	1,1,1-Trichloroethane	200	µg/L	0.25	U	524.2	0.25	0.5	10/24/11	19:13	E83079
2982	Carbon tetrachloride	3	µg/L	0.25	U	524.2	0.25	0.5	10/24/11	19:13	E83079
2983	1,2-Dichloropropane	5	µg/L	0.25	U	524.2	0.25	0.5	10/24/11	19:13	E83079
2984	Trichloroethylene	3	µg/L	0.25	U	524.2	0.25	0.5	10/24/11	19:13	E83079
2985	1,1,2-Trichloroethane	5	µg/L	0.25	U	524.2	0.25	0.5	10/24/11	19:13	E83079
2987	Tetrachloroethylene	3	µg/L	0.25	U	524.2	0.25	0.5	10/24/11	19:13	E83079
2989	Monochlorobenzene	100	µg/L	0.25	U	524.2	0.25	0.5	10/24/11	19:13	E83079
2990	Benzene	1	µg/L	0.25	U	524.2	0.25	0.5	10/24/11	19:13	E83079
2991	Toluene	1,000	µg/L	0.25	U	524.2	0.25	0.5	10/24/11	19:13	E83079
2992	Ethylbenzene	700	µg/L	0.25	U	524.2	0.25	0.5	10/24/11	19:13	E83079
2996	Styrene	100	µg/L	0.25	U	524.2	0.25	0.5	10/24/11	19:13	E83079

NOTE: Results indicating non-detection with a reported lab MDL > .5 µg/L will not be accepted for compliance.

*Results must be reported with appropriate qualifiers in accordance with Florida Administrative Code Rule 62-160, Table 1. Results qualified with A, F, H, N, O, T, Z, ?, *, are unacceptable for compliance with 62-550. Results qualified with a J, Q, R, or Y must be accompanied by written justification and will be evaluated on a case by case basis. To avoid a monitoring violation, unacceptable results must be replaced with acceptable results from samples collected during the same monitoring period.

Florida Department of Environmental Protection
Safe Drinking Water Program Laboratory Reporting Format

SYNTHETIC ORGANICS
62-550.310(4)(b)

Report Number / Job ID: 15889-1 PWS ID (from Page 1): **4130977**

Contam ID	Contam Name	MCL	Units	Analysis Result	Qualifier*	Analytical Method	Lab MDL	RDL	Extraction Date	Analysis Date	Analysis Time	DOH Lab Certification #
2005	Endrin	2	µg/L	0.0020	U	508.1	0.0020	0.01	10/20/11	10/21/11	04:46	E83079
2010	Lindane	0.2	µg/L	0.0030	U	508.1	0.0030	0.02	10/20/11	10/21/11	04:46	E83079
2015	Methoxychlor	40	µg/L	0.014	U	508.1	0.014	0.1	10/20/11	10/21/11	04:46	E83079
2020	Toxaphene	3	µg/L	0.62	U	508.1	0.62	1	10/20/11	10/21/11	04:46	E83079
2031	Dalapon	200	µg/L	0.38	U	515.3	0.38	1	10/20/11	10/21/11	00:10	E83079
2032	Diquat	20	µg/L	0.15	U	549.2	0.15	0.4	10/20/11	10/21/11	13:13	E83079
2033	Endothall	100	µg/L	2.7	U	548.1	2.7	9	10/20/11	10/21/11	13:14	E83079
2034	Glyphosate	700	µg/L	2.1	U	547	2.1	6	N/A	10/20/11	20:42	E83079
2035	Di(2-ethylhexyl)adipate	400	µg/L	0.39	U	525.2	0.39	0.6	10/20/11	10/21/11	15:57	E83079
2036	Oxamyl (Vydate)	200	µg/L	0.41	U	531.1	0.41	2	N/A	10/27/11	11:57	E83079
2037	Simazine	4	µg/L	0.045	U	508.1	0.045	0.07	10/20/11	10/21/11	04:46	E83079
2039	Di(2-ethylhexyl)phthalate	6	µg/L	0.51	U	525.2	0.51	0.6	10/20/11	10/21/11	15:57	E83079
2040	Picloram	500	µg/L	0.050	U	515.3	0.050	0.1	10/20/11	10/21/11	00:10	E83079
2041	Dinoseb	7	µg/L	0.050	U	515.3	0.050	0.2	10/20/11	10/21/11	00:10	E83079
2042	Hexachlorocyclopentadinene	50	µg/L	0.012	U	508.1	0.012	0.1	10/20/11	10/21/11	04:46	E83079
2046	Carbofuran	40	µg/L	0.32	U	531.1	0.32	0.9	N/A	10/27/11	11:57	E83079
2050	Atrazine	3	µg/L	0.021	U	508.1	0.021	0.1	10/20/11	10/21/11	04:46	E83079
2051	Alachlor	2	µg/L	0.034	U	508.1	0.034	0.2	10/20/11	10/21/11	04:46	E83079
2063	2,3,7,8-TCDD (Dioxin)	0.03	ng/L	N/A				0.005				E83079
2065	Heptachlor	0.4	µg/L	0.0061	U	508.1	0.0061	0.04	10/20/11	10/21/11	04:46	E83079
2067	Heptachlor Epoxide	0.2	µg/L	0.0030	U	508.1	0.0030	0.02	10/20/11	10/21/11	04:46	E83079
2105	2,4-D	70	µg/L	0.017	U	515.3	0.017	0.1	10/20/11	10/21/11	00:10	E83079
2110	2,4,5-TP (Silvex)	50	µg/L	0.035	U	515.3	0.035	0.2	10/20/11	10/21/11	00:10	E83079
2274	Hexachlorobenzene	1	µg/L	0.011	U	508.1	0.011	0.1	10/20/11	10/21/11	04:46	E83079
2306	Benzo(a)pyrene	0.2	µg/L	0.019	U	525.2	0.019	0.02	10/20/11	10/21/11	15:57	E83079
2326	Pentachlorophenol	1	µg/L	0.0090	U	515.3	0.0090	0.04	10/20/11	10/21/11	00:10	E83079
2383	Polychlorinated biphenyls (PCBs)	0.5	µg/L	0.10	U	508.1	0.10	0.1	10/20/11	10/21/11	04:46	E83079
2931	Dibromochloropropane	0.2	µg/L	0.00484	U	504.1	0.0048	0.02	10/24/11	10/24/11	14:25	E83079
2946	Ethylene Dibromide (EDB)	0.02	µg/L	0.0061	U	504.1	0.0061	0.01	10/24/11	10/24/11	14:25	E83079
2959	Chlordane	2	µg/L	0.048	U	508.1	0.048	0.2	10/20/11	10/21/11	04:46	E83079

NOTE: Results indicating non-detection with a reported lab MDL >50% of the MCL will not be accepted for compliance.

*Results must be reported with appropriate qualifiers in accordance with Florida Administrative Code Rule 62-160, Table 1. Results qualified with A, F, H, N, O, T, Z, ?, *, are unacceptable for compliance with 62-550. Results qualified with a J, Q, R, or Y must be accompanied by written justification and will be evaluated on a case by case basis. To avoid a monitoring violation, unacceptable results must be replaced with acceptable results from samples collected during the same monitoring period.

Florida Department of Environmental Protection
Safe Drinking Water Program Laboratory Reporting Format

OTHER CONTAMINANTS

Report Number / Job ID: _____

PWS ID (From Page 1): _____

Contam ID	Contam Name	MCL	Units	Analysis Result	Qualifier*	Analytical Method	Lab MDL	Analysis Date	Analysis Time	DOH Lab Certification #
										E
										E
										E
										E
										E
										E
										E
										E
										E
										E
										E
										E
										E
										E
										E
										E
										E
										E
										E
										E
										E

*Results must be reported with appropriate qualifiers in accordance with Florida Administrative Code Rule 62-160, Table 1. Results qualified with A, F, H, N, O, T, Z, ?, *, are unacceptable for compliance with 62-550. Results qualified with a J, Q, R, or Y must be accompanied by written justification and will be evaluated on a case by case basis. To avoid a monitoring violation, unacceptable results must be replaced with acceptable results from samples collected during the same monitoring period.

WATER TREATMENT PLANT OPERATION REPORT

Lead Operator's Signature_____
Lead Operator's License # A 0012597
Number of Full Time Operators: 9
Design Flow: 9.3 M.G.D.

Full Operators Names: Matt Gelmer # C 008096, Tyus Seymour #C 0008465, Mike Valerie # A 0010039, Gerardo E. Hernandez # A 0012568, Augustin Fleur-Aime Jr. # A 0013127, Eric Rigaud # A 013649, Derron B. Lloyd # B 0014291, Mohammad Ramjohn # C 0018775, Travis Williams trainee, Edwin Etienne trainee

Name of Plant : WINSON WATER PLANT
Utility Company: CITY of NORTH MIAMI
Month: July
Telephone Number: (305) 953-2854

County: Dade
ID No: 413-09-77
County ID No:1381-6031- ED
YEAR:2012

DATE	HRS PLNT OPER	WATER TOTALS MILLION GALLONS RAW	WATER TOTALS MILLION GALLONS TREATED	FILTER DATA FILTER #	FILTER DATA Hours Between Washing TOTAL	FILTER DATA Hours Between Washing % OF EFF	FILTER DATA TOTAL WASH WATER (Mil.Gal.)	CHEMICALS POUNDS USED LIME	POUNDS USED PRE CL2	POUNDS USED POST CL2	POUNDS USED Flor Chem	POUNDS USED COAG	OTHER RAIN	OTHER NOON AIR TEMP	DOSAGES (mg/l) LIME	DOSAGES PRE CL2	DOSAGES POST CL2	DOSAGES H2SIF6	DOSAGES FLOR as F ion	DOSAGES COAG
	1	2	3	4	5	6	7	8	9	10	11	12	13	14	15	16	17	18	19	20
1	24	8.145	8.005	2	96	1.5	0.118	5760	95	165	129	19	0.00	84	85	1.4	2.5	1.9	0.4	0.28
2	24	7.840	8.028	3	96	1.4	0.112	5761	95	181	131	19	0.00	91	88	1.5	2.7	2.0	0.4	0.29
3	24	7.827	8.078	4	96	1.5	0.124	5760	95	184	130	19	0.00	88	88	1.5	2.7	1.9	0.4	0.29
4	24	7.888	7.811	1	96	1.7	0.130	7146	92	174	130	20	0.00	89	109	1.4	2.7	2.0	0.4	0.30
5	24	7.949	8.233	2	96	1.5	0.124	6583	80	169	137	22	0.39	83	99	1.2	2.5	2.0	0.4	0.33
6	24	7.597	7.805	3	96	1.6	0.124	6184	81	193	127	21	0.00	90	98	1.3	3.0	2.0	0.4	0.33
7	24	7.785	7.509	4	96	1.7	0.124	6093	77	229	127	20	0.03	89	94	1.2	3.7	2.0	0.4	0.31
8	24	7.892	8.186	1	96	1.4	0.118	4076	85	280	142	18	0.00	81	62	1.3	4.1	2.1	0.4	0.27
9	24	7.867	7.269	2	96	2.0	0.148	0	111	352	128	0	0.05	86	0	1.7	5.8	2.1	0.4	0.00
10	24	7.943	7.501	3	96	1.6	0.118	0	115	364	127	0	0.09	88	0	1.7	5.8	2.0	0.4	0.00
11	24	7.719	7.602	4	96	1.6	0.124	0	113	342	128	0	0.45	79	0	1.8	5.4	2.0	0.4	0.00
12	24	7.854	6.426	1	96	1.8	0.118	0	118	305	54	0	1.80	76	0	1.8	5.7	1.0	0.2	0.00
13	24	8.143	7.854	2	96	1.6	0.124	6121	138	174	131	18	0.20	82	90	2.0	2.7	2.0	0.4	0.27
14	24	7.647	7.921	3	96	1.6	0.124	5489	116	193	130	20	0.10	87	86	1.8	2.9	2.0	0.4	0.31
15	24	7.850	7.865	4	96	1.6	0.124	5760	95	235	137	21	1.40	84	88	1.5	3.6	2.1	0.4	0.32
16	24	7.678	7.631	1	96	1.3	0.099	5957	89	285	141	21	2.15	81	93	1.4	4.5	2.2	0.4	0.33
17	24	8.430	8.521	2	96	1.5	0.124	7200	89	264	126	21	1.90	76	102	1.3	3.7	1.8	0.4	0.30
18	24	8.238	8.474	3	96	1.3	0.112	7200	89	264	137	21	0.00	81	105	1.3	3.7	1.9	0.4	0.31
19	24	7.815	7.592	4	96	1.5	0.112	7205	89	264	120	18	0.00	87	111	1.4	4.2	1.9	0.4	0.28
20	24	8.012	8.003	1	96	1.4	0.112	6950	79	243	138	20	0.00	87	104	1.2	3.6	2.1	0.4	0.30
21	24	7.653	7.846	2	96	1.4	0.112	6785	62	233	123	16	0.00	87	106	1.0	3.6	1.9	0.4	0.25
22	24	7.937	8.344	3	96	1.1	0.093	7200	56	250	147	18	1.35	73	109	0.8	3.6	2.1	0.4	0.27
23	24	7.810	7.861	4	96	1.3	0.099	7026	56	259	142	17	0.30	89	108	0.9	4.0	2.2	0.4	0.26
24	24	7.936	8.003	1	96	1.3	0.105	7026	60	283	118	18	0.00	90	106	0.9	4.2	1.8	0.4	0.27
25	24	7.942	8.008	2	96	1.5	0.124	6897	65	303	134	17	0.00	94	104	1.0	4.5	2.0	0.4	0.26
26	24	7.380	7.495	3	96	1.7	0.130	7200	64	293	134	17	0.00	87	117	1.0	4.7	2.1	0.4	0.28
27	24	7.949	8.095	4	96	1.5	0.118	6615	71	232	132	18	0.00	90	100	1.1	3.4	2.0	0.4	0.27
28	24	7.551	7.532	1	96	1.6	0.118	7200	77	242	141	17	0.00	89	114	1.2	3.9	2.2	0.4	0.27
29	24	7.674	7.991	2	96	1.5	0.118	6791	69	209	140	21	0.00	91	106	1.1	3.1	2.1	0.4	0.33
30	24	8.048	7.688	3	96	1.3	0.099	5724	58	181	131	21	0.00	91	85	0.9	2.8	2.0	0.4	0.31
31	24	7.868	7.649	4	96	1.4	0.105	5760	58	204	143	20	0.00	88	88	0.9	3.2	2.2	0.4	0.30
TO	744	243.87	242.83				3.634	173469	2637	7549	4035	518	10.21							
MAX	24.0	8.43	8.52			2.0	0.148	7205	138	364	147	22.0	2.15	94	117	2.0	5.8	2.2		0.33
MIN	24.0	7.38	6.43			1.1	0.093	0	56	165	54	0.0	0.00	73	0	0.8	2.5	1.0		0.00
AVG	24.0	7.87	7.83				0.117	5596	85	244	130	16.7	0.3	86	85	1.3	3.8	2.0		0.25

Total System Eff.= 343.90

LIME= 711 LB/MG= 85 PPM. PRE/CL2= 10.8 LB/MG= 1.3 PPM. COAG= 2.12 LB/MG= 0.25 PPM.

POS CL/2= 31.0 LB/MG= 3.7 PPM. FLOR = 16.5 LB/MG= 2.0 PPM. Langlier Index: 0.23

Chemical and Physical Results (mg/l)

DATE	RAW PH	RAW M.O. Alk	RAW HARDNESS TOTAL	RAW HARDNESS Calcium	RAW HARDNESS MAG	RAW COLOR	RAW CHLORIDES	SETTLED PH	SETTLED AS CaCo3 P Alk	SETTLED AS CaCo3 M Alk	SETTLED AS CaCo3 Tot Hdns	SETTLED AS CaCo3 Ca HDNS	FINISHED PH	FINISHED AS CaCo3 P ALK	FINISHED AS CaCo3 M ALK	FINISHED AS CaCo3 Tot Hdns	FINISHED AS CaCo3 Ca HDNS	FINISHED Chlorine Residual FREE	FINISHED Chlorine Residual COMBINE	FINISHED COLOR	FINISHED FL as F	FINISHED TURBIDITY	FINISHED WASA (Mil. Gal.)
	21	22	23	24	25	26	27	28	29	30	31	33	34	35	36	37	38	39	40	41	42	48	43
1	7.3	196	218	208	10	19	35	9.1	10	43	68	58	9.0	10	46	64	54	0.0	2.1	10	0.50	0.47	3.432
2	7.3	200	226	214	12	17	37	9.1	10	44	66	54	9.0	9	18	43	31	0.0	2.0	8	0.49	0.51	3.455
3	7.4	194	216	206	10	20	35	9.0	8	46	68	58	8.9	10	45	70	60	0.0	2.1	10	0.55	0.56	3.505
4	7.3	196	222	212	10	21	39	9.2	9	39	66	56	9.0	11	39	64	54	0.0	2.3	5	0.54	0.44	3.238
5	7.2	191	218	208	10	19	39	9.1	10	50	80	70	9.0	10	49	64	54	0.0	2.0	7	0.52	0.50	3.660
6	7.3	198	226	216	10	18	36	9.4	14	40	60	50	9.1	10	40	68	58	0.0	2.0	12	0.45	0.68	3.232
7	7.3	191	216	206	10	18	39	9.1	9	51	64	54	9.0	10	49	66	56	0.0	2.1	8	0.50	0.39	2.936
8	7.2	193	220	210	10	17	37	9.0	9	50	70	60	8.9	10	49	70	60	0.0	2.1	6	0.53	0.32	3.613
9	7.2	198	218	208	10	21	34	7.3	0	181	206	196	7.4	0	189	210	200	0.0	2.2	10	0.56	0.40	2.696
10	7.3	191	216	208	8	19	34	7.3	0	190	214	206	7.4	0	188	212	204	0.0	2.6	10	0.51	0.42	2.928
11	7.3	188	216	206	10	18	40	7.3	0	187	212	202	7.4	0	187	220	210	0.0	2.4	12	0.57	0.45	3.029
12	7.3	193	230	220	10	19	38	7.2	0	200	226	216	7.3	0	197	228	218	0.0	2.2	10	0.55	0.58	1.853
13	7.2	195	222	212	10	19	38	9.1	12	54	79	69	9.0	11	50	82	72	0.0	2.5	9	0.51	0.20	3.281
14	7.3	199	228	220	8	19	36	8.9	7	55	80	72	9.1	8	45	72	64	0.0	2.2	8	0.62	0.62	3.348
15	7.3	196	218	206	12	18	39	8.9	8	49	72	60	8.9	8	49	76	64	0.0	2.2	7	0.54	0.39	3.292
16	7.3	188	210	200	10	18	36	9.0	9	47	70	60	8.9	7	49	72	62	0.0	2.0	6	0.51	0.32	3.058
17	7.3	196	228	220	8	17	37	9.0	8	44	68	60	9.0	10	45	68	60	0.0	2.4	6	0.55	0.22	3.948
18	7.2	198	226	216	10	17	35	9.0	9	51	74	64	8.9	9	47	76	66	0.0	2.4	5	0.54	0.22	3.901
19	7.2	194	220	210	10	19	37	8.9	8	45	74	64	9.1	10	45	70	60	0.0	2.3	7	0.49	0.23	3.019
20	7.2	194	224	212	12	19	37	8.9	8	41	62	50	8.9	9	45	70	58	0.0	2.4	7	0.47	0.28	3.430
21	7.3	190	220	210	10	19	36	9.1	10	41	70	60	8.9	10	44	68	58	0.0	2.4	5	0.54	0.22	3.273
22	7.3	196	222	214	8	20	36	9.1	8	41	66	58	9.0	8	42	66	58	0.0	2.0	5	0.49	0.31	3.771
23	7.1	220	192	180	12	18	37	9.0	9	42	62	50	9.0	10	38	64	52	0.0	2.4	5	0.49	0.46	3.288
24	7.3	198	174	164	10	19	37	9.0	10	44	64	54	8.9	9	38	64	54	0.0	2.5	5	0.52	0.40	3.430
25	7.2	199	220	208	12	20	35	8.9	9	45	70	58	8.9	10	46	76	64	0.0	2.2	9	0.54	0.40	3.435
26	7.3	191	218	210	8	19	37	9.0	10	46	68	60	8.9	9	45	70	62	0.0	2.6	7	0.52	0.48	2.922
27	7.3	189	218	208	10	18	37	9.0	10	47	68	58	9.1	10	40	68	58	0.0	2.5	6	0.58	0.19	3.522
28	7.2	193	218	206	12	19	36	9.2	10	48	68	56	9.0	9	48	70	58	0.0	2.6	6	0.53	0.07	2.959
29	7.2	199	220	210	10	20	35	9.2	9	39	66	56	9.1	10	37	62	52	0.0	2.7	9	0.49	0.32	3.418
30	7.4	200	220	210	10	19	36	9.0	10	50	72	62	8.9	9	45	70	60	0.0	2.2	10	0.51	0.41	3.115
31	7.3	198	218	210	8	17	35	9.0	10	44	70	62	8.8	8	49	76	68	0.0	2.4	10	0.54	0.39	3.076
TO																							101.07
MAX	7.4	220	230		12	21	40	9.4	14	200	226		9.1	11	197	228	218	0.0	2.7	12	0.62	0.68	3.95
MIN	7.1	186	174		8	17	34	7.2	0	39	60		7.3	0	18	43	31	0.0	2.0	5	0.45	0.07	1.85
AVG	7.3	196	218		10	19	37	8.8	8	64	89		8.8	8	63	88	78	0.0	2.3	8	0.52	0.38	3.26

Enter additional Remarks:

Exhibit 1-4
NM Winson WTP
Existing Design Criteria Summary

DESCRIPTION	UNITS	EXISTING FIELD VERIFIED	COMMENTS
Off-Site Production Wells	-	-	Not in scope of Project
On-Site Production Wells			
Well No. 1			
No. Of Pumps	#	1	
Well diameter	inches	12	per Craig Smith April 2006 Capacity Analysis Report (Table 1-1)
pump capacity	gpm	1,500	
TDH	ft	57	subject to adjustment once well is redevelop well
	BHP	27	assume 80% eff - pending final pump selection
drive motor	HP	30	
total Connected HP	HP	30	
permitted flow	gpm	1,500	
pipe length	ft	135	per M&E/AECOM Feasibility Study Table 2-1 and WUP No. 13-00059-W
pipe diameter	inches	12	
Well No. 2			
No. Of Pumps	#	1	
Well diameter	inches	12	Craig Smith April 2006 Capacity Analysis Report (Table 1-1)
pump capacity	gpm	1,500	
TDH	ft	62	subject to adjustment once well is redevelop well
	BHP	29	assume 80% eff - pending final pump selection
drive motor	HP	30	
total Connected HP	HP	30	
permitted flow	gpm	1,500	
pipe length	ft	210	M&E/AECOM Feasibility Study Table 2-1 says 1100 gpm - corrected per WUP No. 13-00059-W
pipe diameter	inches	10	
Aerator			
no. of units	#	2	Article 2.3.1 M&E / AECOM Feasibility Study
capacity	mgd	20	2 units in one structure
Accelator (Line Softening Unit)			
no. of units	#	1	Article 2.3.1 M&E / AECOM Feasibility Study
Permitted Capacity	mgd	9.30	Operating Permit PWO-000014-2011/2012
	gpm	6,458	
diameter (@ Top minus launders)	ft	61	
area	sf	2,921	
clarifier surface loading rate	gpm/sf	2.21	
drive motor	HP	20	with variable frequency drive proposed
Lime Slaking System			
no. of units	#	1	
Silo Capacity	cuft	2,800	Article 2.3.1 M&E / AECOM Feasibility Study
Lime Feeder	HP	0.5	
Slaker Capacity	pph	1,000	
Slaker drive motor	HP	0.5	
Slaked Lime Pump	HP	5	
slaked lime grit removal	HP	0.5	
total connected HP	HP	6.5	
Filters			
number of filters	#	4	
width	ft	18.0	
length	ft	30.0	
filter area, each	sq ft	540	
total filter area	sq ft	2,160	
filter media depth - existing	ft	3.5	per M&E / AECOM Feasibility Study (Page 9)
filter media depth - proposed	ft	3.0	6-inch gravel, 20-inch anthracite, 10-inch sand
filter box depth (bottom slab to trough)	ft	13.0	
filter box volume	cu ft	7,020	
	gals	52,517	
Filter Loading Rates @ Peak Production Capacity of 9.3 mgd			
average (all filters in service)	gpm / sq ft	3.0	
peak (one filter out of service)	gpm / sq ft	4.0	

Exhibit 1-4
NM Winson WTP
Existing Design Criteria Summary

DESCRIPTION	UNITS	EXISTING FIELD VERIFIED	COMMENTS
Backwash Pump			
No. of Pumps	#	1	Pump curve from City 3-19-12 (6300 gpm @ TDH = 28 ft)
pump capacity	gpm	6,300	new pumps for WTP Upgrade
TDH	ft	28	
	BHP	64	
drive motor	HP	75	Non-overloading full stable range
total Connected HP	HP	75	Pending Final Pump Selection during detailed design
Backwash System Design Capacity			
no of backwash cycles per day per filter (maximum)	#	1	
backwash pump capacity - existing	gpm	6,300	Existing pump curve from City 3-19-12 (6300 gpm @ TDH = 28 ft)
no of backwash cycles per day (all filters)	#	4	
backwash rate	gpm/sf	12	
Backwash Cycle Sequence / Times			
low flow (surface scour) backwash	minutes	0.0	Existing cycle per discussion with WTP Staff
high flow (regular) backwash	minutes	20.0	
simultaneous surface wash	minutes	0.0	
low flow backwash	minutes	0.0	
filter resting period	minutes	0.0	
filter to drain	minutes	30.0	see calc below for bottom drain sizing
total backwash cycle time	minutes	50.0	
Total Backwash Water Used per Cycle	gal	126,000	
Total Backwash Water Used per Day - maximum)	gal	504,000	
		5.4%	as percentage of total production
Transfer Pump			
No. of Pumps	#	1	
type of pump	-	vertical turbine	
no. of pumps in service	#	1	
	gpm	6,300	
estimated discharge head	ft	28	Pump curve from City 3-19-12 (6300 gpm @ TDH = 28 ft)
pump efficiency	%	72%	
	BHP	61.9	
drive motor	HP	50	Non-overloading full stable range
Total Connected Load	HP	50	Pending Final Pump selection during detailed design
Surface Scour System			
no of scour cycles per day per filter (maximum)	#	N/A	flow is "shaved" from off-site high service distribution manifold
required flow rate	gpm	-	
required pressure	psi	-	
no of backwash cycles per day (all filters)	#	-	
Existing 0.75 MG Storage Tank			To be replaced by new Tanks on land to North of WTP
No. of Tanks	#	1	
Diameter	ft	80.0	
Sidewall Height (est.)	ft	20.0	
Existing 1.5 MG Storage Tank			To be replaced by new Tanks on land to North of WTP
No. of Tanks	#	1	
Diameter	ft	110.0	
Sidewall Height (est.)	ft	21.0	
High Service Pumps from Storage Tank			Craig Smith April 2006 Capacity Analysis Report (Table 1-1)
Total City Demand (approximately)	mgd	13.3	
Water Purchased from MDWASD (average)	mgd	4.0	
Capacity required - average	mgd	9.30	
	gpm	6,458	
PHF/ADF Peaking factor	#	1.60	flow factors per (MC) NM Water Model 6-7-12
	gpm	10,333	
Minimum Flow factor	#	0.5	
	gpm	4,960	
No. of Pumps	#	3	proposed pumps with VFDs
pump capacity	gpm	2,000	
TDH	ft	160	70 psi

Exhibit 1-4
NM Winson WTP
Existing Design Criteria Summary

DESCRIPTION	UNITS	EXISTING FIELD VERIFIED	COMMENTS
drive motor	BHP	101	assumes 83.5% eff
drive motor	HP	100	Non-overloading full stable range
No. of Pumps (Nos. 2 and 4)	#	2	
pump capacity	gpm	1,000	
TDH	ft	160	
drive motor	BHP	51	assumes 83.5% eff
drive motor	HP	50	
No. of Pumps (No. 6)	#	1	
pump capacity	gpm	3,000	
TDH	ft	160	
drive motor	BHP	152	assumes 70% eff
drive motor	HP	150	field verify
			Pump Sizing will be completed during detailed design Target is 150 HP - Likely 200 HP motor carried in
Total Installed Capacity at WTP			
minimum (1 pump)	gpm	2,000	assumed 60% turndown via VFD
	mgd	2.88	
average (2 to 3 pumps)	gpm	6,000	
	mgd	8.64	
maximum (all pumps)	gpm	11,000	
	mgd	15.84	
Total Connected Load	HP	550	
Total Number of Distribution Pumps	#	6	reduction in two total high service pumps
Total Number of Pumps Installed in new Master Pump Station	#	8	equal pumps to existing with redundant transfer and backwash
Backwash Holding Basin			
Solids Production			
	ppd	18,500	H&S W-WTP Sludge Master Plan Aug 2010
	gpd @ 6%	37,600	
	mgd treated	8.3	
	ppd/mgd	2,229	
	gpd/mgd	4,530	
No of Basins	#	2	
Basin Dimensions			
length	ft	62	
width	ft	31	
depth	ft	6.0	
area	sq ft	1,922	
volume	cu ft	23,064	
	gal	172,542	
Waste Lime Sludge Pump Station			
Lime Sludge Wasting Cycle	gph	variable	
pump rate to MDWASD	gpm	250.0	assumed per discussion with City and Pump Curve
	cfs	0.6	
	TDH	112.0	trailer mounted diesel 80 HP diesel pump
Force Main Diameter to Pump Station A	inch	4.0	
	sq ft	0.087	
velocity	fps	6.4	
length of line	ft	2,000	
friction loss	ft/100 ft	4.0	
No. of Pumps	#	1.0	
pump type	-	centrifugal	
pump cycle	mins	-	
	hrs		
TDH	ft	96.0	
drive motor	BHP	-	
	HP	80	
Decant Pumps			
Backwash Pump Capacity	gpm	6,300	
Total backwash volume per day	gal	478,800	
Basin Volume	gal	172,542	

Exhibit 1-4
NM Winson WTP
Existing Design Criteria Summary

DESCRIPTION	UNITS	EXISTING FIELD VERIFIED	COMMENTS
No. of pumps	#	1	
capacity	gpm	333	
	cfs	0.74	
TDH	ft	30.0	
drive motor	BHP	8.4	
drive motor	HP	15.0	
total connected load	HP	15.0	
Chemical Handling Facility			
Chemical Feed Pumps - Fluoride			
Chemical Used	-	23% Fluorosilic Acid	SG = 1.2 @ 20 degrees C
Density of Solution	lbs/gal	10.01	
Chemical delivered per gallon	lbs	2.30	
Dosage	mg/l	0.5	
WTP Permitted Capacity	mgd	9.3	
Chemical Usage per Day	ppd	38.8	
	gpd	16.8	
No. of Pumps	#	1	
type of pump	-	diaphragm metering	micrometer stroke control
Capacity	gph	1.0	0.7
drive motor	HP	0.25	Per WTP staff
Bulk Storage Tank - Fluoride			
no. of tanks	-	1	
material of construction	-	HDPE	
capacity	gals	500	
Chemical Feed Pumps - Ammonia			
Chemical Used	-	29.4% Ammonium Hydroxide	SG = 0.8974 @ 20 degrees C
Density of Solution	lbs/gal	7.48	
Chemical delivered per gallon	lbs/gal	2.20	
Dosage	mg/l	0.75	
WTP Permitted Capacity	mgd	9.3	
Chemical Usage per Day	ppd	58.2	
	gpd	26.4	
No. of Pumps	#	1	
type of pump	-	diaphragm metering	micrometer stroke control
Capacity	gph	-	No Information Available
drive motor	HP	-	
Bulk Storage Tank - Ammonia			
no. of tanks	-	55 gal Drums (2 pallets of 4)	
Chemical Feed Pumps - Coagulant Aid			
Chemical Used	-	WhisperFloc	17 lbs of whisper floc per 300 gal of water
Density of Solution	lbs/gal	8.34	
Chemical delivered per gallon	lbs / gal	0.057	
Dosage	mg/l	0.26	
WTP Permitted Capacity	mgd	9.3	
Chemical Usage per Day	ppd	20.2	
	gpd	355.9	
No. of Pumps	#	1	
Capacity	gph	25.0	14.8
drive motor	HP	0.25	per WTP staff
Bulk Storage Tank - Coagulant Aid		2 pallets with 21 bags of 20 kg each	
Hypochlorite Facility			
Chemical Feed Pumps - Hypochlorite - Pre Chlorination			
Chemical Used	-	12.5% NaOCl	
Density of Solution	lbs/gal	9.70	
Chemical delivered per gallon	lbs	1.21	
Dosage	mg/l	3.50	Pre and Post Chlorination - see Chem Usage Worksheet
WTP Permitted Capacity	mgd	9.3	
Chemical Usage per Day	ppd	271.5	
	gpd	223.9	
No. of Pumps	#	1	
Capacity	gph	150.0	9.3
drive motor	HP	1.0	per WTP staff

Exhibit 1-4
NM Winson WTP
Existing Design Criteria Summary

DESCRIPTION	UNITS	EXISTING FIELD VERIFIED	COMMENTS
Chemical Feed Pumps - Hypochlorite - Post Chlorination			
Chemical Used	-	12.5% NaOCl	
Density of Solution	lbs/gal	9.70	
Chemical delivered per gallon	lbs	1.21	
Dosage	mg/l	4.00	Pre and Post Chlorination - see Chem Usage Worksheet
WTP Permitted Capacity	mgd	9.3	
Chemical Usage per Day	ppd	310.2	
	gpd	255.9	
No. of Pumps	#	1	
Capacity	gph	150.0	10.7
drive motor	HP	1.0	per WTP staff
Bulk Storage Tank - Hypochlorite			
no. of tanks	-	2	1+1 Service
material of construction	-	FRP	
Capacity	gals	2,000	

TECH MEMO 2 – ON-SITE RAW WATER SYSTEM IMPROVEMENTS

HAZEN AND SAWYER
Environmental Engineers & Scientists

Hazen and Sawyer, P.C.
4000 Hollywood Boulevard
Seventh Floor, North Tower
Hollywood, Florida 33021
(954) 997-0066
Fax: (954) 987-2949

Technical Memorandum No. 2 – BODR
City of North Miami Winson WTP
On-Site Raw Water System Improvements

To: Distribution

From: Hazen and Sawyer, P.C.

Date: November 2012

Preamble

A total of nine Technical Memoranda (TM) comprise the Basis of Design Report (BODR) for the Winson Water Treatment Plant BP 3 WTP Rehabilitation Project. Work on these TMs was initiated with a Kick-off Meeting on May 31, 2012. However, on October 24, 2012 the City authorized Hazen and Sawyer to proceed with revisions to Technical Memoranda to include newly acquired City property located adjacent to the northeast perimeter of the Winson WTP into the BODR. This direction necessitated the relocation of proposed Administration Building from the northwest to the southwest corner of the WTP site, and that the proposed 2.5 MG Water Storage Tank, in the southwest corner of the site was replaced with two 1.25 MG Storage Tanks to be located on the new City property. In addition, the City also requested that the Administration Building conceptual floor plan be revised to further increase the size of the Emergency Operations Center (EOC), as well as provide a dedicated EOC access to the planned Observation Deck. These requests impacted six of the eight TMs, which were either nearly complete or already accepted by the City, as well as required the development of a new Bid Package 4 to address the construction of the two 1.25 MG water storage tanks and appurtenant improvements on the City acquired land.

As a result, the following TMs will be revised, with original versions of the TMs included as Appendicies to the Basis of Design Report.

- TM 2 – On site Raw Water System Improvements: Revise to reflect the new Administration Building and Storage Tank location and their impacts on Well No. 2.
- TM 4 – Proposed Process Improvements – Revise to address changes to noted site layout as well as process impacts required for operation of the WTP with only the existing 0.75 MG Storage Tank until the two new 1.25 MG Storage Tanks are constructed on the newly purchased land.
- TM 5 – Proposed Administration Bldg – Revise to reflect City request for a larger EOC with dedicated access to the observation deck. Also requires site layout and additional parking revisions
- TM 6 – I/C System – Revise to address changes to noted site layout as well as

impacts to proposed PLC locations.

- TM 7 – Electrical Improvements – Revise to address changes to noted site layout as well as impacts due to new location of electrical room on generator ductbank and site feed ductbanks.
- TM 8 – Site Improvements – Revise to address changes to noted site layout as well as impacts to previously proposed stormwater management plan

Note that this TM 2 represents a REVISION to the TM 2 - PRE-FINAL version dated September 28, 2012.

1.0 Background and Purpose

The City of North Miami (City) owns and operates the Winson Water Treatment Plant (WTP), a conventional lime softening facility with a permitted capacity of 9.3 mgd. The WTP treats raw water from the Biscayne Aquifer and serves areas within the City limits as well as the Village of Biscayne Park, portions of Golden Glades, Westview, Pinewood, and surrounding areas of unincorporated Miami-Dade County. Potable water is supplied from the Winson Water Treatment Plant (WTP) and interconnects with the Miami-Dade County Water and Sewer Department (MDWASD), providing approximately 8.5 mgd AADF and 4.5 mgd AADF to users respectively. The WTP was constructed in the early 1960s and the current Bid Package 3: WTP Rehabilitation Project (BP 3) proposed to rehabilitate processes throughout the facility while maintaining the existing treatment capacity fixed at 9.3 mgd.

Raw water supply to the treatment facility is obtained from eight existing Biscayne Aquifer production wells. Two of these wells (Nos. 1 and 2) are located on the WTP site and were put into service in 1962. The remaining six wells (Nos. 3 through 8) are located off-site and being addressed under separate contract(s). Well Nos. 1 and 2 have never been rehabilitated and it is reported by City staff that the specific capacity performance of these wells has degraded over time. Moreover, based on field observations and discussion with the City, existing pumps, well heads and associated structural, electrical and transmission piping are all at the end of their useful lives.

The purpose of this TM is to address the redevelopment and replacement of the two on-site wells and pumps. Well related instrumentation upgrades are addressed in Technical Memorandum (TM) No. 6 – Plant Control and Information System. Electrical upgrades are addressed in TM No. 7 – Electrical System Improvements. Replacement of on-site raw water transmission piping is addressed in TM No. 8 – General Site and Facility Improvements. This technical memorandum reviews alternative improvement concepts, summarizes recommended upgrades, and provides a preliminary implementation strategy and opinion of probable project cost.

2.0 Review of Existing Conditions

Well No. 1 is located adjacent to the aerator tower and the existing WTP operations building. Well No. 2 is located on the northeast side of the WTP site next to a 1.5 MGD finished water aboveground storage tank. The location of Well Nos. 1 and 2 is illustrated in Exhibit 2-1. Each well is permitted for a production capacity of 1,500 gpm under SFWMD Water Use Permit No. 13-00059-W.

The two wells are reported to have 12-inch diameter steel production casings; with Well No. 1 constructed to a cased depth of 100 feet and a total borehole depth of 124 feet, and Well No. 2 constructed to a cased depth of 90 feet and a total borehole depth of 104 feet. Neither of the wells is reported to be furnished with screens. Both wells are services by vertical turbine line shaft pumps with nameplate capacities of 1,500 gpm and 8-inch column piping. The Well No. 1 pump intake is located at an estimated depth of 30 feet below land surface (bls). The Well No. 2 pump intake is located at an estimated depth of 25 feet bls. Pump head, motor and wellhead components are located above ground on concrete bases. Well No. 2 is also housed within a CMU structure.

Each well discharges to a 10-inch diameter transmission line that interconnects with the WTP main feed line originating at the off-site wellfield. All raw water piping is reported to be ductile iron. Existing yard piping connections could allow raw water to bypass the treatment process. However plant staff has reported that this bypass piping has never been used and is unnecessary for plant operation and it will be removed as discussed in TM 8. The wells are not equipped with pressure or level instruments. As such, they are operated manually (ON-OFF) and are not equipped with either remote or local monitoring capabilities.

Although maintenance and replacement of some pumping equipment and wellhead components have been performed during the life of the wells, WTP staff reports a variety of concerns including frequent needed repairs of pump motors, columns, valves and flow meters. In addition, a potential physical restriction in the raw water transmission system has been reported that will be addressed under a separate contract.

3.0 Proposed Improvements

Redevelopment of Well Nos. 1 and 2 is proposed to reestablish yield characteristics and evaluate / confirm the integrity of the well construction and casing. Work efforts include initial capacity testing, evaluation of the existing well structure, redevelopment activities, and final capacity testing. In addition, all pumping equipment, column piping, wellhead components and base slab are recommended for replacement. The CMU structure on Well No. 2 will not be replaced. New instrumentation and electrical improvements, along with transmission line replacements are also proposed. Pump replacement capacity will equal existing to match the current WTP permitted production capacity. Since the City currently uses two types of pumps (submersible for off-site and vertical turbine for on-site) for wellfield service, an evaluation and recommendation regarding the type of replacement pumps that should be used is also presented.

The following summarizes proposed design criteria and layouts of the recommended effort.

Well Rehabilitation: Redevelopment work will consist of the following activities:

- Initial pump capacity testing on the wells to determine existing specific capacity and drawdown levels prior to performing the rehabilitation activities.
- Geophysical logging including x-y caliper logs to evaluate the condition of the well construction and well casing.
- A video survey of the entire well formation and casing.
- Potential brushing of the casing from top to bottom followed by development of the well by air-lifting to remove dislodged corrosion particles.
- Complete development of the well by air-lifting and pumping until water is proven to be clear and contain less than 1 ppm of sand.
- Additional geophysical logging of the well including x-y caliper logs, after well development.
- A specific capacity test in the rehabilitated well to evaluate the effectiveness of the development process.
- Potential acidulation of the well, if further development is needed.
- A post-rehabilitation video survey of the entire well to document the final condition
- Disinfection of the well after installation of pumping equipment and prior to returning the production well to service.

Review of available record documents and discussion with City staff indicates that existing well pump operating curves are not available. However, hydraulic calculations for the proposed well pump Nos. 1 and 2 were prepared as part of the preliminary pump selection process presented in this TM, and information collected during specific capacity testing and well redevelopment will be used to verify these preliminary hydraulic calculations.

Note that improvements to off-site well Nos. 3 through 8 and associated raw transmission system modeling and improvements are to be addressed under a separate contract.

Well Pump Discharge Piping: The proposed scope for replacement of associated well pumping and conveyance facilities includes the following:

- Proposed on-site well locations are illustrated in Exhibit 2-2.
- A plan view of recommended above ground well pump and discharge piping components for either vertical shaft or submersible pump configurations are illustrated in Exhibit 2-3. Cross sectional views of the alternatives are illustrated in Exhibit 2-4. In either case, a new reinforced concrete slab will be provided for piping support. The pump head or base plate concrete support base may either be at grade, or built-up to provide better clearance and access for the wellhead piping and instrumentation. Depending on the type of pump configuration selected, the corresponding pump head or base plate will be installed to secure the pump column. Regardless of the type of con-

figuration selected, a casing air release valve/vent and access for the level instrument cable will be provided. Discharge piping will include an air/vacuum valve, a pressure sustaining valve (check valve), a combination valve, a magnetic type flow meter (magmeter), a gate type isolation valve, and requisite pressure and level monitoring instruments. In addition, a tee downstream of the meter will be furnished for "blow-off" of water during well maintenance. Pipe and fittings shall be ductile iron. As standard design practice dictates, transition pieces will be provided to separate the dissimilar metals of the pump column and head. Associated electrical and instrumentation components will be housed in an adjacent Local Control Panel (LCP). As the wells are located on-site, no fencing or enclosure of the wells is proposed.

Pump Type Evaluation: The City currently uses submersible pumps with Certa-Lok PVC columns at off-site wells, and vertical turbine line shaft pumps with stainless steel columns at on-site Well Nos. 1 and 2. A review of estimated capital and operating costs, including consideration of relative advantages and disadvantages of each pump type in well service, and consideration of construction materials is presented below.

Submersible Pump Configuration:

Construction Cost = $76,000 (pump, motor, base plate, column, installation)

Operating Cost = $18,920/yr - 1,500 gpm @ 60 ft TDH, 20 hrs/day, 80% pump efficiency, 90% motor efficiency, $0.11 kW-hr.

Advantages	Disadvantages
• Does not generate ambient noise	• Column removal required for maintenance access
• Self-enclosed unit	• Submersible motors are more expensive to repair
• Minimal alignment requirements	• Lower efficiency motor
• Matches existing off-site pumps	

Vertical Turbine Line Shaft Pump Configuration:

Construction Cost = $59,000 (pump, motor, pump head, column, installation)

Operating Cost = $18,310/yr - 1,500 gpm @ 60 ft TDH, 20 hrs/day, 80% pump efficiency, 93% motor efficiency, $0.11 kW-hr.

Advantages	Disadvantages
• Simplified access for maintenance	• Can generate ambient noise
• Higher efficiency motor	• More components (pump., head, column, bowls)
• Lower maintenance per City staff	• Shaft alignment is critical and labor intensive
	• Differs from off-site pumps (uniformity)

Typically, Biscayne aquifer vertical turbine type well pumps are constructed of cast iron bodies and bowl assemblies, with bronze impellers and coated carbon steel or stainless steel columns. The City has reported shortened life cycles and maintenance issues with carbon steel columns. As such, stainless steel columns are recommended. However, as the existing

well casing diameter is too small for utilization of standard flanged ends, threaded ends are proposed with special coatings to prevent galling.

By contrast, submersible pumps for Biscayne aquifer service may use PVC or coated carbon steel columns. However, the largest diameter available for Certa-Lok PVC columns in submersible service is 8-inch, which is not recommended by the manufacturer for flow rates higher than 1400 gpm. Therefore, for comparisons purposes in this evaluation, 8-inch stainless steel columns are assumed.

The analysis indicates that operating costs for the two alternative pump types are similar, but capital costs are approximately 30% higher for submersible units. Based on discussions with plant staff it is recommended that the existing Well No. 1 and 2 pumps be replaced with vertical turbine line shaft types units with stainless steel columns as agreed with the City during the Technical Memorandum No. 2 review meeting on September 26, 2012.

A summary of the proposed design criteria for the replacement well pumps is presented in Table 2-1.

Table 2-1
Proposed Design Criteria
Replacement Well Pumps Nos. 1 and 2

Item	Unit	Value
Number of Pumps	#	2 (one per well)
Pump Type	-	Vertical Turbine Line Shaft
Design Point		
• Capacity*	gpm	1,500
• TDH	feet	60
No of Stages	-	3
Bowl Assembly Material	-	Cast iron
Impeller Material	-	Bronze
Motor Horsepower	hp	40
Motor Speed	rpm	1,800
Column Length	feet	30
Column Material	-	Type 316 Stainless Steel (threaded)

*The flow rate listed is the permitted well flow rate. The specific capacity of the well will be established during the well redevelopment process.

Electrical: Each pump will be provided with a Local Control Panel (LCP) will contain a disconnect switch, the well pump motor starter, a mini-power center (for 120V convenience power and lighting), surge protective devices, and local HAND-OFF-REMOTE and ON-OFF switches. LCPs will be powered from the upgraded WTP electrical system. Note

that WTP electrical system upgrades are described in greater detail in TM No. 7 – Electrical System Improvements.

Instrumentation and Controls (I/C): Proposed improvements include the addition of requisite equipment to allow for both local and remote monitoring and control of the two on-site wells and pumps. New level transducers/transmitters will be installed for measuring the water level in each well casing. These level transducers will access the well casing through an opening/connection on the pump base or through an opening/connection on the concrete base above the casing termination. Details of installation will be established during detail design. However, for clarity notes have been added to the attached exhibit to indicate the intended installation. The submersible type transducers are less than ¾-inch in diameter, so adequate clearance is expected between the 12-inch well casing and the 8-inch stainless steel column piping. Pressure indicating transmitters will be used to monitor pump discharge pressure. Pressure switch will be provided for safety shutdown on high pressure. Full tube magmeter type flow meters will be installed on each pump discharge line. Motor winding temperature monitors will also be provided. A communications module within the new pump Local Control Panel will allow for integration of the on-site well with the WTP SCADA system being implemented under separate contract. Note that proposed I/C upgrades are described in greater detail in TM No. 6 – Plant Control and Information System.

5.0 Project Implementation

As discussed and agreed with the City, the redevelopment of Well Nos. 1 and 2 will be implemented as a change order to the Well Nos. 3 through 8 Project which is currently under procurement. It is estimated that an additional contract time of approximately 6 weeks will be required to complete the work under that Project. Once the wells are redeveloped, the existing pumping equipment and wellhead facilities will be reinstalled and remain in service pending the implementation of Bid Package 3 WTP Rehabilitation Project, scheduled for bids in the summer of 2013.

Based on this implementation strategy, work associated with replacement of the existing on-site well pumping, wellhead and conveyance facilities that was to be implemented as a stand-alone Bid Package 2, will instead be included in the referenced Bid Package 3. As a result, design fees currently appropriated to Bid Package 2 will be reallocated to Bid Package 3 to cover the costs of including well pump replacement in that effort. Accordingly, permitting and bid assistance fees currently appropriated to Bid Package 2 will be expended to cover the costs of associated with permitting and negotiating a change order with the Off-Site Well Rehabilitation Contractor.

It is expected that permitting required for the rehabilitation and redevelopment of Well Nos. 1 and 2 will include the following:

- Miami Dade Department of Health (FDEP Application for a Public Drinking Water Facility Construction Permit)

It is expected that permitting required for the replacement of the well pump and wellhead facilities for Well Nos. 1 and 2 will include the following:

- Miami Dade Department of Health (FDEP Application for a Public Drinking Water Facility Construction Permit)
- City of North Miami Building Department

6.0 Preliminary Construction Cost

The estimated preliminary construction cost for well redevelopment, and well pump and associated wellhead replacement is presented in Table 2-2. The accuracy of this cost opinion is +50% to –15% "Class 2 Preliminary" Level as generally suggested by AACE International. The preliminary project construction cost is estimated to be approximately $350,000. Table 3 summarizes the costs.

Table 2-2
Preliminary Project Construction Cost
Well and Pump Nos. 1 and 2 Rehabilitation

Item	Quantity	Installed Unit Cost	Total
Well Rehabilitation and Redevelopment	2	$25,000	$50,000
Demolition of existing facilities	2	$5,000	$10,000
Pumps and column piping [1]	2	$59,000	$118,000
Wellhead Mechanical (i.e., pipe, valves, fittings, flow meter)	2	$30,000	$60,000
Wellhead Structural	2	$5,000	$10,000
General Conditions	8%		$19,840
Construction Cost Subtotal (July, 2012)			$267,840
Contingency (30%)			$80,352
Preliminary Project Construction Cost			$348,192

Notes: For planning purposes assumes utilization of threaded stainless steel column piping.

Attachments

Distribution:
A. Ghany
W. Pierre-Louis
P. Vida
B. Vidal
T. Carney
J. Atoche

c: G. Brown
File 44238-004 / 1.2

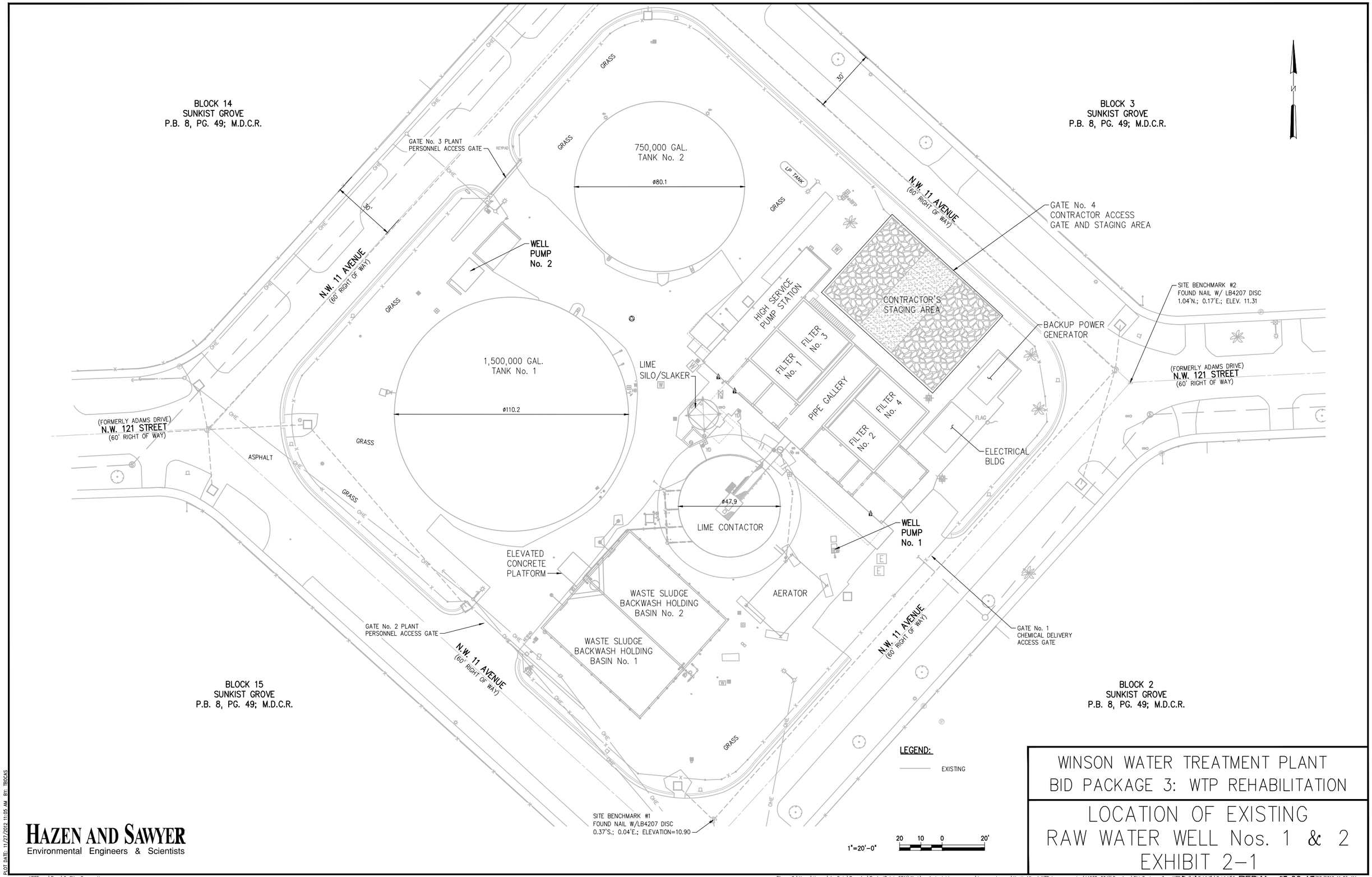

HAZEN AND SAWYER
Environmental Engineers & Scientists

WINSON WATER TREATMENT PLANT
BID PACKAGE 3: WTP REHABILITATION

LOCATION OF EXISTING
RAW WATER WELL Nos. 1 & 2
EXHIBIT 2-1

PLOT DATE: 11/27/2012 11:05 AM BY: TBOCAS

XREFs= .\Base\C-Site-Survey-X

File = C:\Users\tbocas\AppData\Roaming\ProjectPoint-2011\Work\projectpoint.buzzsaw.com\hazenandsawyer\North Miami WTP Improvements (44238-004)\Drawings\Bid Package 3 - WTP Rehabilitation\Exhibit 2-1.dwg Layout: 1 Plotted: 11/27/2012 11:05 AM

BLOCK 14
SUNKIST GROVE
P.B. 8, PG. 49; M.D.C.R.

BLOCK 3
SUNKIST GROVE
P.B. 8, PG. 49; M.D.C.R.

N.W. 11 AVENUE
(60' RIGHT OF WAY)

(FORMERLY ADAMS DRIVE)
N.W. 121 STREET
(60' RIGHT OF WAY)

GATE No. 3 PLANT
PERSONNEL ACCESS GATE

750,000 GAL.
TANK No. 2

ø80.1

GRASS

LP TANK

30'

WELL
PUMP
No. 2

ADMINISTRATION
BUILDING

ASPHALT

CHEMICAL HANDLING
FACILITY

FILTER
No. 1

FILTER
No. 3

PIPE GALLERY

FILTER
No. 2

FILTER
No. 4

LIME
SILO/SLAKER

ø47.9

LIME CONTACTOR

AERATOR

BACKWASH HOLDING
BASIN No. 2

BACKWASH HOLDING
BASIN No. 1

SODIUM
HYPOCHLORITE
FACILITIES

BACKUP POWER
GENERATOR

ELECTRICAL
BLDG

FLAG

SITE BENCHMARK #2
FOUND NAIL W/ LB4207 DISC
1.04'N.; 0.17'E.; ELEV. 11.31

WELL
PUMP
No. 1

WELL NO. 2 RAW WATER PIPING
TO TIE-IN WITH MAIN RAW
WATER TRANSMISSION SYSTEM

GATE No. 2 PLANT
PERSONNEL ACCESS GATE

GATE No. 1
CHEMICAL DELIVERY
ACCESS GATE

GATE No. 5
CHEMICAL DELIVERY
ACCESS GATE

BLOCK 15
SUNKIST GROVE
P.B. 8, PG. 49; M.D.C.R.

BLOCK 2
SUNKIST GROVE
P.B. 8, PG. 49; M.D.C.R.

WELL NO. 1 RAW WATER PIPING
TO TIE-IN WITH MAIN RAW
WATER TRANSMISSION SYSTEM

SITE BENCHMARK #1
FOUND NAIL W/LB4207 DISC
0.37'S.; 0.04'E.; ELEVATION=10.90

1"=20'-0"

20 10 0 20'

LEGEND:

PROPOSED

EXISTING

HAZEN AND SAWYER
Environmental Engineers & Scientists

WINSON WATER TREATMENT PLANT
BID PACKAGE 3: WTP REHABILITATION

LOCATION OF PROPOSED WELLHEADS
FOR RAW WATER WELL Nos. 1 & 2
EXHIBIT 2-2

PLOT DATE: 11/27/2012 11:08 AM BY: TBOCAS

XREFs= .\Base\C-Site-Survey-X,.\Base\44238-004-MTank-FPlan-MProp

File = C:\Users\tbocas\AppData\Roaming\ProjectPoint-2011\Work\projectpoint.buzzsaw.com\hazenandsawyer\North Miami WTP Improvements (44238-004)\Drawings\Bid Package 3 - WTP Rehabilitation\Exhibit 2-2 - Wellheads.dwg 11/27/2012 11:08 AM

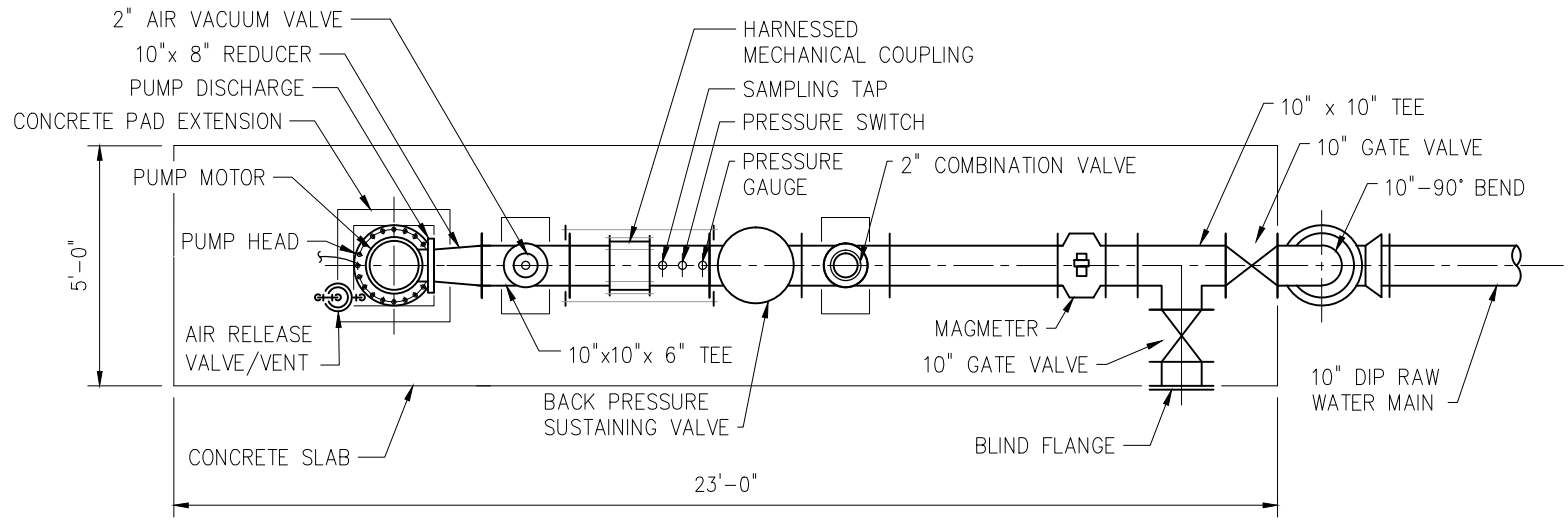

WELLHEAD PLAN – VERTICAL TURBINE LINE SHAFT

NTS

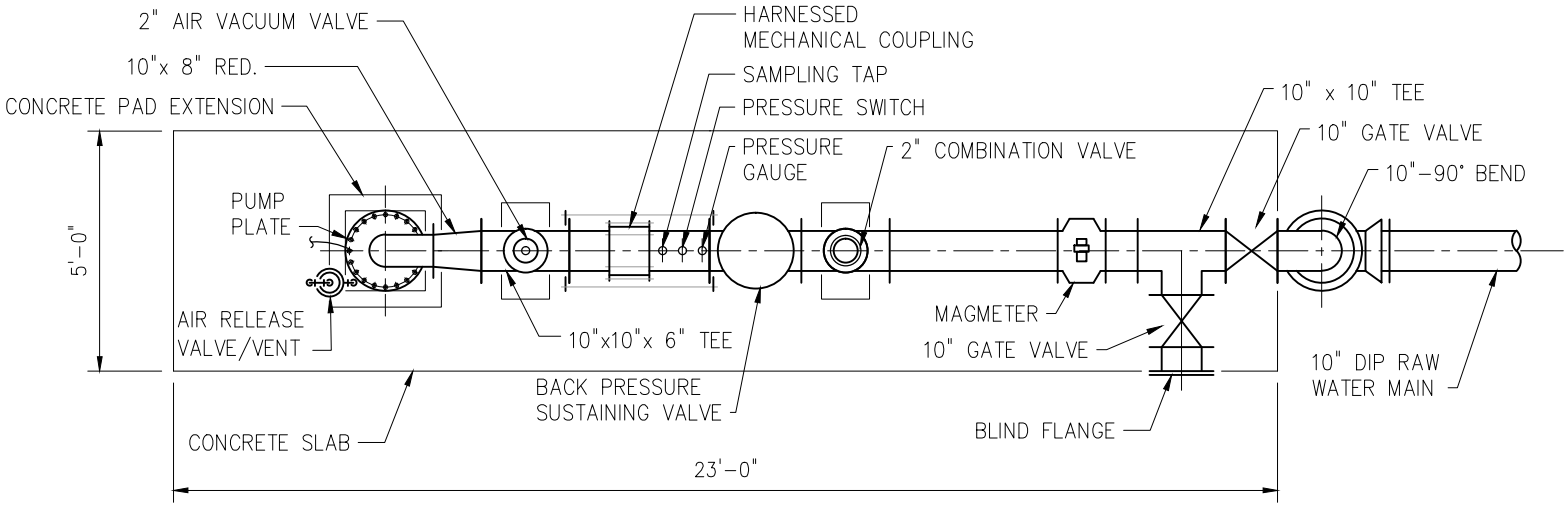

WELLHEAD PLAN – VERTICAL TURBINE SUBMERSIBLE

NTS

HAZEN AND SAWYER
Environmental Engineers & Scientists

WINSON WATER TREATMENT PLANT
BID PACKAGE 3: WTP REHABILITATION

BISCAYNE PRODUCTION WELL Nos. 1 AND 2
TYPICAL WELLHEAD PLAN
EXHIBIT 2-3

PLOT DATE: 11/27/2012 10:19 SYMBOL: BR: AW BY: AW
XREF:=
File = C:\Users\tbocos\AppData\Roaming\ProjectPoint-2011\Work\projectpoint.buzzsaw.com\hazenandsawyer\North Miami WTP Improvements (44238-004)\Drawings\Bid Package 3 - WTP Rehab\Exhibits\Exhibit 2-3 Saved by randersen Save date = 9/28/2012 2:57 PM

WINSON WATER TREATMENT PLANT
BID PACKAGE 3: WTP REHABILITATION

BISCAYNE PRODUCTION WELL Nos. 1 AND 2
TYPICAL WELLHEAD SECTION
EXHIBIT 2–4

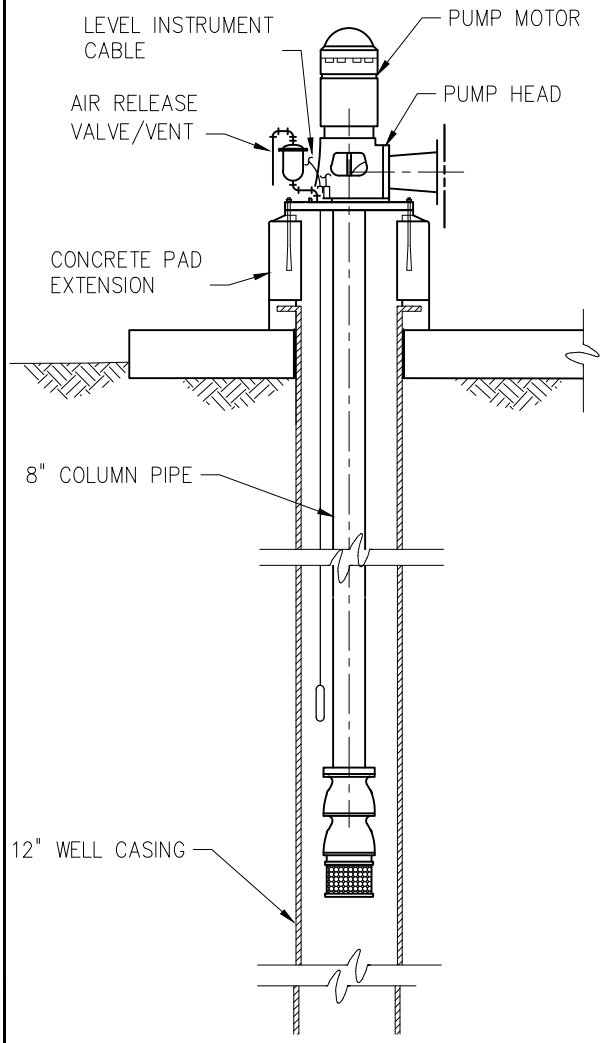

WELL SECTION–VERTICAL TURBINE LINE SHAFT
NTS

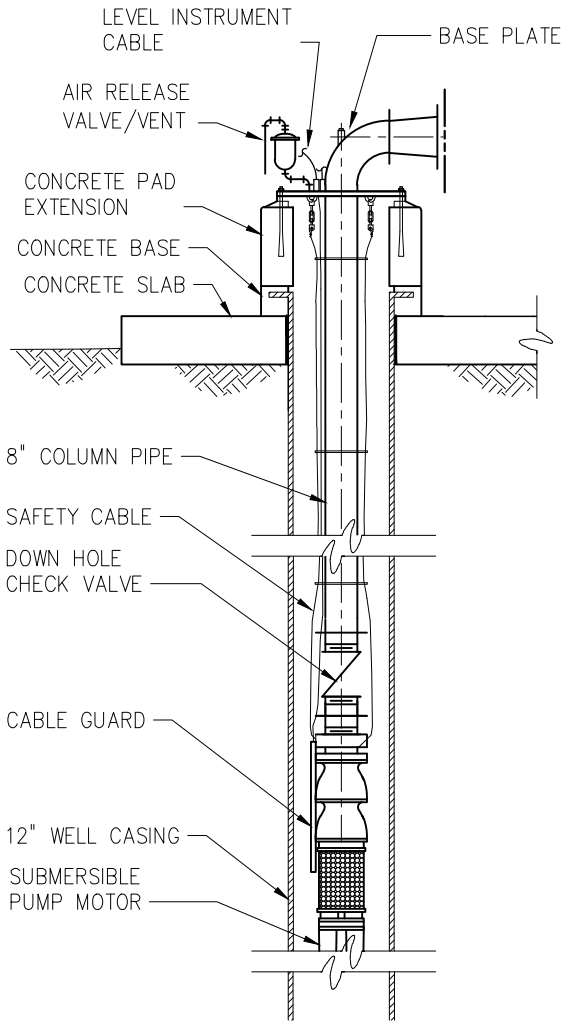

WELL SECTION–VERTICAL TURBINE SUBMERSIBLE
NTS

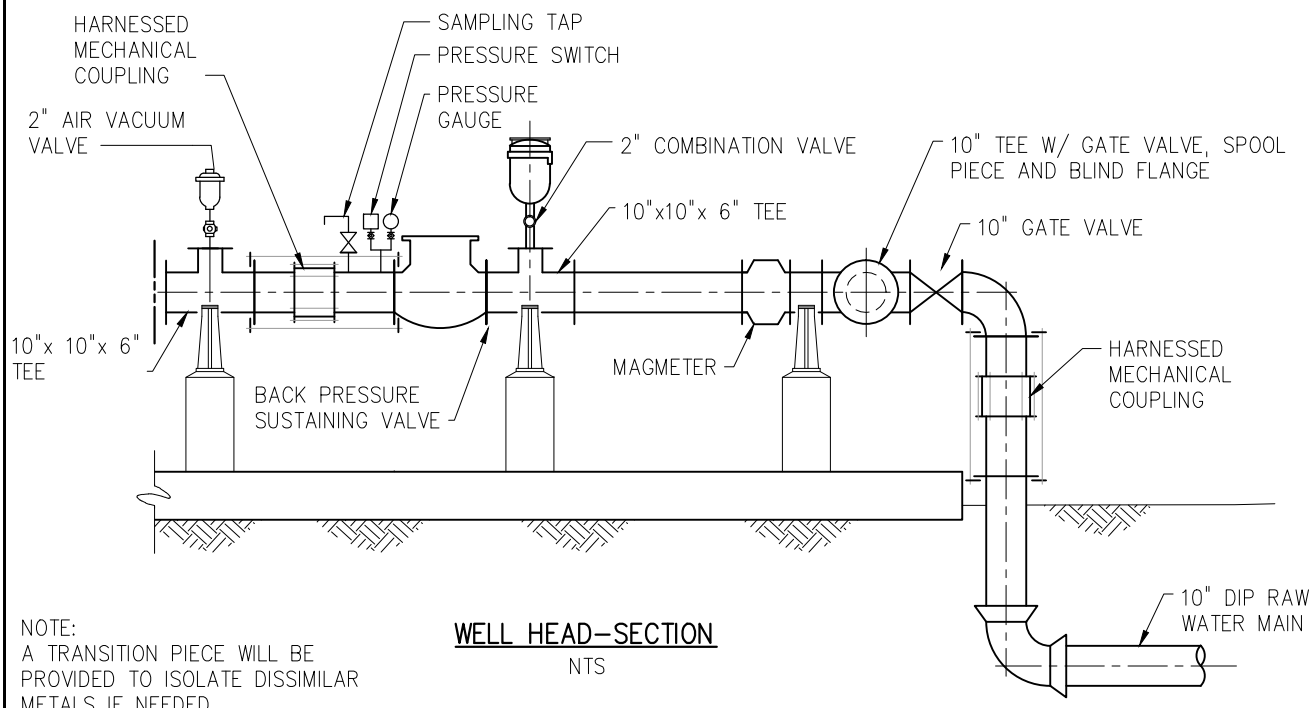

NOTE:
A TRANSITION PIECE WILL BE PROVIDED TO ISOLATE DISSIMILAR METALS IF NEEDED.

WELL HEAD–SECTION
NTS

HAZEN AND SAWYER
Environmental Engineers & Scientists

TECH MEMO 3 – STRUCTURAL EVALUATIONS AND IMPROVEMENTS

HAZEN AND SAWYER
Environmental Engineers & Scientists

Hazen and Sawyer, P.C.
4000 Hollywood Boulevard
Seventh Floor, North Tower
Hollywood, Florida 33021
(954) 997-0066
Fax: (954) 987-2949

Technical Memorandum No. 3 - BODR
City of North Miami Winson WTP
Structural Evaluations and Improvements

To: Distribution

From: Hazen and Sawyer, P.C.

Date: November 2012

1.0 Background and Purpose

The City of North Miami (City) owns and operates the Winson Water Treatment Plant (WTP), a conventional lime softening facility with a permitted capacity of 9.3 mgd. The WTP treats raw water from the Biscayne Aquifer and serves areas within the City limits as well as the Village of Biscayne Park, portions of Golden Glades, Westview, Pinewood, and surrounding areas of unincorporated Miami-Dade County. Potable water is supplied from the Winson Water Treatment Plant (WTP) and interconnects with the Miami-Dade County Water and Sewer Department (MDWASD), providing approximately 8.5 mgd AADF and 4.5 mgd AADF to users respectively. The WTP was constructed in the early 1960s and the current Bid Package 3: WTP Rehabilitation Project (BP 3) proposed to rehabilitate processes throughout the facility while maintaining the existing treatment capacity fixed at 9.3 mgd.

In 2007 the City prepared a report titled Winson Water Treatment Plant Expansion Feasibility Study (Feasibility Study) indicating that the existing lime softening treatment system and Biscayne Aquifer wellfield infrastructure were at or near the end of their useful life. Based upon subsequent on-site observations and discussions with City staff, H&S generally concurred with the recommendations of the Feasibility Study. To this end, the City has determined that WTP facilities should be rehabilitated to ensure continued reliability through the year 2030. Due to budget constraints, expansion of the treatment capacity is currently on hold. Bid Package 3: WTP Rehabilitation Project (BP 3) proposes to rehabilitate existing WTP unit processes throughout the facility while maintaining the existing treatment capacity fixed at 9.3 mgd.

The referenced Feasibility Study included a structural assessment of existing facilities and identified targeted structural rehabilitation improvements that will be included in the BP 3 Project. In general, these improvements are needed to extend the useful life and/or improve the reliability and operability of noted facility components and include the following:

- Raw water Aerator support structure
- Lime Contactor welded steel tank refurbishment
- Backwash Holding Basin structural refurbishment

- 750,000 Gallon Storage Tank
- 1,5000,000 Gallon Storage Tank
- Filter Clearwell
- High Service Pump Station
- Structural repairs to Electrical Room No. 1

The purpose of this Technical Memorandum (TM) is to provide an overview of proposed improvements to address these targeted structural issues. Note that Section 2.0 addresses the condition of targeted existing facilities. Section 3.0 then presents recommended improvements to address existing deficiencies noted in Section 2.0. Costs and staging associated with this work will be addressed under TM 9 – Probable Cost and Schedule.

2.0 Overview of Existing Targeted Structures

As agreed with the City, H&S conducted a general structural assessment of targeted existing facilities via visual observation during multiple site visits and discussions with WTP staff. The following paragraphs provide individual discussion on the existing conditions of the various target facilities. A plan view of the existing WTP illustrating the location of the various facilities, including a staging area to be constructed under the BP 1 Project, is presented in Exhibit 3-1.

Raw Water Aerator Support Structure - The WTP currently has two “waterfall-type” fiberglass aerator units installed atop an elevated structure constructed of steel members. The aerator units have a common steel containment pan and steel enclosure with cross members. The existing structure does not provide means for WTP staff access to the aerator level. Photos of the existing aerator structure are presented on Exhibit 3-2. City staff has reported that the integrity of the aerator support structure may be compromised due to modifications made during construction to accommodate the Lime Contactor feed line. Visual inspection of the support structure suggests that some deformation of upper level beams may have occurred. To this end, structural analysis software (STAAD) was used to evaluate the support structure. This evaluation considered structural reliability and capacity based on dead and live load conditions, as well as current Florida Building Code wind loadings, as presented on Exhibit 3-2A.

It is important to note that the original construction documents for the aerator, entitled “Equipment Replacement Due to Hurricane Wilma Damage, May 2006”, indicate that the foundations for the support structure columns were to be constructed as auger piles. However, field observations indicate that column supports consist of cast-in-place concrete of indeterminate sizing with no record drawing data available. To this end, with no visual indication of foundation deficiencies, the STAAD analysis focuses on structural member loadings only.

Results of the analysis, summarized graphically on Sheets 5 and 6 of Exhibit 3-2A, indicate that cross members at the top of the aerator base pan support structure appear to be overloaded. These members are illustrated in “red” to facilitate review. In addition, the modifications to the mid-level right corner made during construction to facilitate the routing of the Lime Contactor feed line do not appear to have impacted the integrity of the structure. Al-

though basis of design calculations from the original design engineer of record are not available, this analysis generally indicates that the majority of support structure members are within acceptable loadings, with the exception of the "red" cross members referenced above. Therefore, replacement of the existing structure is not recommended. In addition, visual inspection of the structure shows some deterioration to existing protective coatings with no apparent damage to structural members.

Lime Contactor Welded Steel Tank Refurbishment - The WTP currently operates an "Accelator" type contactor for lime softening of raw water. The Lime Contactor is housed in a welded steel tank that is reported by the City to be in good condition with some minor localized corrosion. City staff also reports that targeted maintenance on the tank has been performed over the years. Visual inspection of the tank interior was conducted by the City, H&S and a protective coating Supplier when the tank was drained for routine maintenance. Observations appeared to confirm that the tank as in relatively good condition. It was agreed with the City that no additional testing of the tank steel walls was necessary. In addition, it was also agreed that the Lime Contactor mechanism, drive and walkways had reached the end of their useful life. Photos of the existing Lime Contactor are presented in Exhibits 3-2 and 3-3.

Backwash Holding Basin Structural Refurbishment - The WTP has two basins for recovery of filter backwash water and storage of waste lime sludge prior to disposal. Based on review of the original WTP contract drawings, the basins are constructed of cast-in-place reinforced concrete and concrete masonry units (CMU) with a divider wall creating two basins. The exterior walls of the structure are CMU construction supported by steel rods in tension spaced at approximately 15 ft on center anchored to 2 ft square concrete anchor plates located in the ground behind the walls. The basins are open to the atmosphere and provided with perimeter guardrail. A sluice gate between basins is used for isolation. A truck loading structure located on the west side of the basins has reached the end of its useful life. Visual inspection of the two basins indicates areas where minor damage to the existing wall surfaces is apparent. It was agreed with the City that no additional testing of the walls was necessary. The existing floor slabs of the basins also appear in generally good condition. In addition, the existing guardrail system is not continuous around the perimeter of the structures and does not appear to meet current rail spacing requirements. Photos of the existing basins are presented in Exhibits 3-3 and 3-4.

Filter Clearwell - Exterior and interior inspection of the existing clearwell was performed by Underwater Solutions, Inc. in February 2009 and concluded that the clearwell was in good structural condition. However, an approximate 6 to 7-inch layer of "precipitate" appears to have settled on the bottom of the structure.

Filter / OPS Building– This existing structure houses the Plant Operations Control Room, Operator locker facilities, process filters, chemical systems, electrical room and the High Service Pump Station. Structure generally consists of two types of construction separated by an expansion joint as follows:

- Filters – Structure consists of a reinforced concrete tank housing the filter clearwell below grade, the filters and pipe gallery at grade level directly above the clearwell. Reinforced concrete columns and CMU extend above the pipe gallery supporting a cast-in-place concrete slab to house the operating room.

- Ancillary Areas – A one-story building surrounds the filters on the east, south and west sides. Structure consists of reinforced concrete columns and beams supporting steel roof joists and a composite concrete/metal deck housing the electrical room, chemical systems, office area and storage. The high service pump station area is located at the west side of the filters with steel columns and beams in lieu of concrete. Foundation for the ancillary areas consists of a reinforced concrete slab on grade.

High Service Pump Station - This existing High Service Pump Station is located along the west end of the Filter / OPS Building and houses six (6) high service pumps, one (1) transfer pump and one (1) backwash pump. Pictures of the facility interior and exterior are included on Exhibit 3-5. The cast-in-place concrete slab on grade functions as the structure floor, with the exception of a floating slab which covers the clearwell extension where the transfer and backwash pumps are installed. Six high service pumps are installed on the slab on grade portion of the structure floor. An illustration of pump station floor plan indicating all equipment (to be demolished) is presented in Exhibit 3-7. The entirety of the existing OPS / Filter Building was constructed in the 1960s, so it is assumed that the structure envelope, including louvers, doors and windows do not meet current Code requirements. In addition, protective coatings on the floor, walls and ceiling show some deterioration. The existing High Service Pump Station will be replaced by a new Master Pump Station as addressed in TM 4 – Proposed Process Improvements.

750,000 Gallon Ground Storage Tank - An exterior and interior inspection performed by Underwater Solutions, Inc. in February 2009 concluded that this welded steel storage tank is in good condition. However, this tank will be demolished to make area available for a new Administration Building. Exhibit 3-6 includes an exterior photo of the tank.

1,500,000 Gallon Ground Storage Tank - An exterior and interior inspection performed by Underwater Solutions, Inc. in February 2009 concluded that this welded steel storage tank is in good condition. However, this tank will be demolished and replaced with a new prestressed concrete 2.5 million gallon capacity storage tank to provide requite storage capacity at the WTP. Exhibit 3-6 includes an exterior photo of the tank. For further details reference TM-4 Proposed Process Improvements.

Structural Repairs to Electrical Room No. 1 – This electrical room is located between the High Service Pump Station and the FPL Vault in the Filter / OPS Building. The room is adjacent to the filter clearwell and City staff reports that the room is prone to flooding due to an existing gap on the northern wall-floor joint. It is theorized that the gap resulted from joint compound deterioration, as the City notes that the gap has been in existence for over 10 years. A photo of the existing gap is presented on Exhibit 3-5.

Flooding is reported to occur when the clearwell level rises above the finished floor elevation in the room. Limited existing instrumentation inhibits WTP staff control of clearwell level. All existing electrical equipment housed in this room will either be relocated or replaced by new units at the proposed Administration Building Electrical Room. Thus, existing Electrical Room 1 will be used for general storage purposes in the future.

Filter / OPS Building Walkway Canopy – The existing walkway canopy roof shows signs of deterioration and the City has requested that potential replacement with a similar, more robust structure be considered. Pictures of the existing canopy are shown on Exhibit 3-6.

3.0 Proposed Targeted Structural Improvements

The following structural improvements to the noted targeted facilities are proposed under the scope of the BP 3 Project. For detail regarding process related upgrades, please reference TM 4 – Proposed Process Improvements.

Raw Water Aerator Support Structure: Based on the structural analysis performed (Exhibit 3-2A), the following activities are recommended:

- Strengthen the upper level steel members of the existing structure with field-welded plates along the bottom of the beams identified in "red" on the STAAD analysis.
- Prepare entirety of structure with abrasive blasting for subsequent application of protective coatings

In addition, to address the City's request that access be provided to the aerator units for maintenance purposes, a new stair/walkway structure will be installed. The structure will consist of two levels; one upper landing to access to the aerator units, and one intermediate landing to access the Lime Contactor. An illustration of the proposed improvement is presented in Exhibit 3-8.

To allow installation of the reinforcing plates on the structure support members under stress-relieved conditions, raw water will bypass the aerator and be delivered directly to the lime contactor unit through the existing bypass line for a period of approximately 3 working days. Based on discussions with City staff, when the aerator is bypassed in this manner the total raw water that can be delivered to the lime contactor is reduced to approximately 7.0 or 7.5 mgd. The contract documents will include allowances for additional water purchases by the City during this work.

Lime Contactor Welded Steel Tank Refurbishment: - The existing Accelator mechanism, including ancillary launders and walkways, will be replaced in their entirety. During this effort, the interior and exterior surfaces of the welded steel tank that houses the mechanism will be blast cleaned and protective coatings applied. Blast cleaning will include removal of existing corrosion that may be observed. This proposed work will generally be sequenced as follows:

- Lime Contactor shutdown –During this period it is anticipated that the City will be required to purchase water to supply its customer base. Plant operations staff is currently in discussions with regulatory representatives to determine the feasibility of distributing filtered, un-softened water to users.
- Demolition of existing Accelator components including interior mechanism, drive, launders and walkways will proceed.
- Refurbishment of interior and exterior welded steel tank surfaces including application of NSF 61 compliant protective coatings and observed corrosion removal will be included.

- Installation of replacement Accelator components including interior mechanism, drive, launders and walkways. Accelator components will be delivered to the site with a primer coat. Prior to installation within the tank, the first application of the specified NSF compliant protective coating will be applied.
- The final NSF 61 compliant coating will be applied once all components are installed.
- Installation of the Accelator mechanism will include a walkway to the new aerator access structure.
- Final coating application on the interior tank surfaces will be checked for damage and corrective coatings applied after all Accelator components are installed.
- Start-up, testing and acceptance

At the completion of this work, the Lime Contactor will be placed back in service and the City will discontinue additional purchases of water. This work effort will result in an approximate 90 day period where the Lime Contactor unit will be off-line. Other work requiring shutdown of the WTP will be scheduled to extent possible to coincide with this effort, to minimize the amount of water that the City must purchase during the execution of the BP 3 Project. Please reference TM 9 – Probable Cost, Scheduling and Sequencing, which will be developed once TM 1 through TM 8 and accepted by the City as Final, for additional details.

Backwash Holding Basin Structural Refurbishment: - The vertical wall surfaces on both basins will be repaired via blast cleaning to remove deteriorated concrete, patched with a cementitious repair mortar, and coated with a cementitious waterproofing protective coating. Any damaged and/or exposed reinforcing steel encountered during the blasting operations will be repaired, covered with a rust inhibitor, or replaced depending on the severity of the deterioration. The contract documents will include specifications and quantity allowances for concrete repair (cubic / square feet) and crack repair (linear feet) to better define the anticipated scope of the work. These quantities will be developed during the detailed design phase.

In addition, the existing guardrail system will be removed and replaced with a code compliant system throughout the entire perimeter of the two basins. Also, the sluice gate that connects the two basins will also be replaced. As agreed with the City, the existing truck loading structure will be demolished and not replaced. To minimize impacts to WTP operation, this work will be scheduled during Lime Contactor shutdown.

Filter Clearwell – The layer of “precipitate” that is reported to have settled on the bottom of the clearwell will be removed during on the planned shutdowns that will occur during the BP 3 Project. In addition, the bottom of the clearwell will be inspected during this effort to address any potential structural concerns (cracks, etc) that may be detected.

Filter / OPS Building Code Compliance Upgrades - The BP 3 Project scope of services includes the requisite design of upgrades for existing Filter / OPS Building compliance with current code requirements. However, review of the work effort and construction costs associated with such an effort were deemed excessive by the City, considering that the BP 3 Project would also include the construction of a new WTP Administration Building. To this

end, it was agreed with the City that efforts for this work would be expended on the design of a new consolidated WTP Chemical Handling Facility, as the scope the BP 3 Project specifically excluded upgrades to existing chemical handling system.

A meeting was subsequently held between City Administration, City staff, H&S and the North Miami Building Department to verify that proceeding in such a manner was acceptable to all parties and complied with anticipated jurisdictional permitting requirements applicable to the BP 3 Project. Those efforts resulted in agreement that the existing Filter / OPS Building Occupancy Type would remain unchanged, barring improvements that exceed more than 50% of the structures current value. As such, no upgrades to establish current Code compliance of the Filter / OPS Building are contemplated in BP 3 work, with the exception of items that may otherwise be identified as necessary during the detailed design phase.

High Service Pump Station Room: - Once the proposed Master Pump Station is installed and placed into successful operational, the existing High Service Pump Station will be taken out of service and existing pumps demolished.

Demolition work will include the following:

- Support pedestals for all existing equipment will be demolished
- Floor openings remaining after equipment removals will be sealed
- Openings into the clearwell shall be specifically protected and sealed to preclude contamination
- Existing piping below grade slabs will be abandoned in place to the extent possible
- A “topping” concrete slab shall be installed over the entire floor area, with specific attention to load impact on the floating slab portion over the clearwell extension.
- Targeted enhancements to existing interior finishes and building envelope will be identified and addressed during detailed design.

The remaining High Service Pump Station Room will then be converted into the new Chemical Handling Facility as discussed in TM 4 – Proposed Process Improvements.

Structural Repairs to Electrical Room No. 1: - The existing gap in the floor-wall joint shall be sealed using a high performance joint and crack waterproofing system. .Once the new Administration Building Electrical Room is constructed and placed into successful operation, all equipment within Electrical Room 1 will be taken out of service and demolished. Targeted enhancements to existing interior finishes will be addressed during design

Filter / OPS Building Walkway Canopy: – The replacement of the existing operations building walkway canopy roof will be addressed during the next phase of design of the facilities. In general, it is anticipated that the canopy will function as a transitional corridor between the new Administration Building and the existing Filter / OPS Building. Therefore, the architectural style of the canopy will be selected to enhance that pedestrian connection between those two structures during the design phase of the BP 3 Project.

4.0 Miscellaneous Issues – Differential Settlement

It is important to note that differential settlement concerns have not been reported, nor are visible upon cursory review of the various existing WTP structures. This issue was discussed with the City and consensus reached that differential settlement does not present a concern, and aside from targeted crack repair and ancillary patching that may be determined necessary during detailed design, no further consideration of differential settlement to existing structures is required under the scope of the BP 3 Project.

Attachments

Distribution:
A. Ghany
W. Pierre-Louis
P. Vida
B. Vidal
T. Carney
J. Atoche

c: G. Brown
File 44238-004 / 1.2

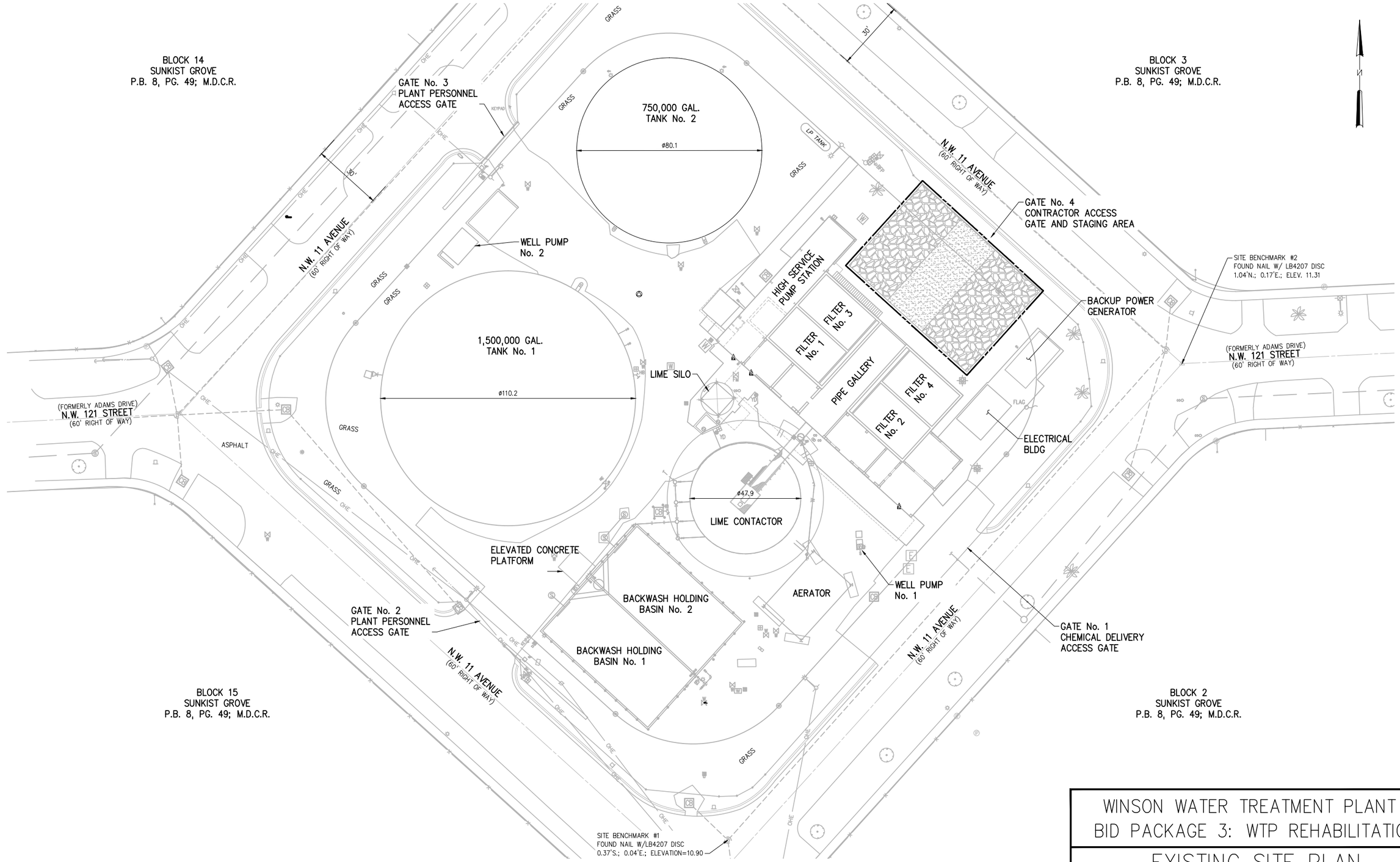

WINSON WATER TREATMENT PLANT
BID PACKAGE 3: WTP REHABILITATION

EXISTING SITE PLAN

EXHIBIT 3–1

HAZEN AND SAWYER
Environmental Engineers & Scientists

PLOT DATE: 8/7/2012 9:40 AM BY: RANDERSEN

XREFs= ..\..\Base\C-Site-Survey-X

File = G:\44238-000-HWD\44238-004\Drawings\Bid Package 3 - WTP Rehabilitation\Exhibits\Exhibit 3-1 - Existing Site Plan.dwg Layout=Exhibit 3-1 8/7/2012 9:40 AM

RAW WATER AERATOR SUPPORT STRUCTURE

NTS

RAW WATER AERATOR SUPPORT STRUCTURE

NTS

RAW WATER AERATOR SUPPORT STRUCTURE

NTS

RAW WATER AERATOR SUPPORT STRUCTURE

NTS

LIME CONTACTOR UNIT

NTS

LIME CONTACTOR UNIT

NTS

WINSON WATER TREATMENT PLANT
BID PACKAGE 3: WTP REHABILITATION

EXISTING CONDITIONS
PHOTOS
EXHIBIT 3-2

HAZEN AND SAWYER
Environmental Engineers & Scientists

PLOT DATE: 9/19/2012 1:37 PM BY: RANDERSEN

XREFs=

File = C:_BZProjects\44238-004\Drawings\Bid Package 3 - WTP 9/19/2012 1:36 PM

EXHIBIT 3-2A

NORTH MIAMI WTP IMPROVEMENTS

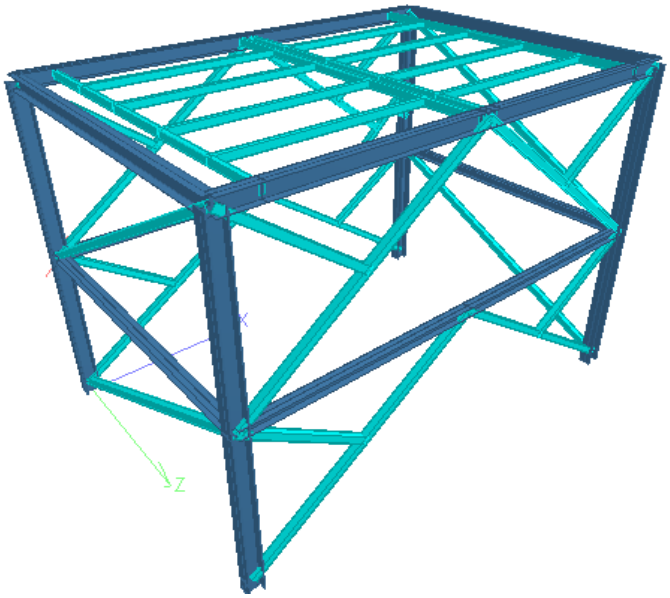

AERATOR BASIN
44238-004

STRUCTURAL CALCULATIONS

PREPARED BY

HAZEN AND SAWYER
Environmental Engineers & Scientists

	Date	By
Designed	07/16/12	A.V.
Revised	07/16/12	J.P.S

Jean Paul Silva
P.E. # 66522

HAZEN AND SAWYER
Environmental Engineers & Scientists

CONTENTS

1. DESCRIPTION

2. DESIGN CRITERIA

- **2.1. Material Properties**
- **2.2. Load factors**
- **2.3 Codes and Standards**

3. LOAD EVALUATION

- **3.1. Dead Load**
- **3.2 Live Load**
- **3.3. Wind Loads**

4. STAAD.PRO MODEL - OUTPUT DATA

1. DESCRIPTION

The following structural calculations were developed for the review of the aeration structure.

The aeration structure is an existing structure that is necessary to check because the upper level beams show an exagerated deformation and also to verify compliance with the terms of the new version (2010) of the Florida Building Code.

2. DESIGN CRITERIA

2.1. Material Properties

Steel
The following general classes and strength of steel were used:

ASTM Specification A 992 grade 50 for W shapes.
ASTM Specification A 500 grade B for steel tubing.

2.2. Load factors

Load factor and load combinations for steel allowable stress design shall be:

U = D	Where:	D = Dead loads
U = D + L		L = Live loads
U = D + L + Lr		Lr = Roof live loads
U = D + L + R		R = Rain loads
U = D +/- W + L + Lr		W = Wind load
U = D +/- W + L + R		

2.3 Codes and Standards

The design of all structures and modifications to existing structures are in compliance with the latest edition of the following codes and standards:

- Florida Building Code
- ASCE 7 - Minimum Design Loads for Buildings and Other Structures
- AISC - Manual of Steel Construction, ASD
- AWS D1.1 - Structural Welding Code - Steel
- AWS D1.2 - Structural Welding Code - Aluminum
- AWS D1.4 - Structural Welding Code - Reinforcing Steel
- ASTM standards

3. LOAD EVALUATION

3.1. Dead Load

Aerator basin

Ext. Long. Beams			
Wall (3/16" PL)	=2.5*0.64	1.60	plf
Bottom (3/16"PL)	=4.5/2*0.64	1.44	plf
Top frame	=+(14/2+2*4+7.67)*5.59/4	31.68	plf
		34.72	plf
Int. Long. Beams			
Bottom (3/16"PL)	=4.5/2*0.64	1.44	plf
Ext. Trans. Beams			
Wall (3/16" PL)	=2.5*0.64	1.60	plf
Top frame	=+(14+4*2+2*7.67)*5.59/14	14.91	plf
		16.51	plf

3.2 Live Load

1'-10" of water

Water on Ext. Long. Beams			
	=62.5*2.5*4.5/2	257	plf
Water on Int. Long. Beams			
	=62.5*2.5*(5+4.5)/2	543	plf

3.3. Wind Loads

Risk Category		III		Table 1.5-1
				Fig. 26.5-1B
V		180	mph	1920.2 FBC
Wind Directionaly Factor, Kd				Table 26.6-1
Kd		1.00		
Exposure Category		C		Sec. 26.7
Topografic Factor				
Kzt		1.00		26.8.2
Gust Effect Factor				
G		0.85		
h		25	ft	
Kz		0.94		
q	=0.00256*Kz*Kzt*Kd*V^2			
	=0.00256*0.94*1*1*180^2	77.97	lb/ft2	
FBC Load Combinations (D+H+F+0.6W)				FBC 1605.3.1
Factor		0.60		
q	=+0.6*77.97	46.78	lb/ft2	
Force Calculations				ASCE 29.5-1
EAST FRAME				
Ee		0.19		(Calculations bellow)
Force Coeficient				
Cf	=4*0.19^2-5.9*0.19+4	3.02		Fig. 29.5-3
Fe	=+46.78*0.85*3.02	119.96	psf	
NORTH FRAME				
En		0.25		(Calculations bellow)
Force Coeficient				
Cf		2.77		Fig. 29.5-3
Fn		110.26	psf	

Ratio to solid area to gross area

EAST FRAME

Gross Area	B	L	Area
	33	25	825

Elements area

	Cant	Long (ft)	Sect (ft)	Area (ft2)	Load (plf)
W12	2	25	1.00	50	120
W8	1	31	0.67	21	80
W12	1	31	1.00	31	120
SQ 6	4	19.1	0.50	38	60
SQ 6	4	9	0.50	18	60
Plate	1	28	2.50	70	300
				158	

Ee= =+157.97/825 0.19

NORTH FRAME

Gross Area	B	L	Area
	23	25	575

Elements area

	Cant	Long (ft)	Sect (ft)	Area (ft2)	Load (plf)
W12	2	25	1.00	50	110
W8	1	21	0.67	14	74
W12	1	21	1.00	21	110
SQ 6	2	24	0.50	24	55
Plate	1	14	2.50	35	276
				144	

En= =+144.07/575 0.25

4. STAAD.PRO MODEL - OUTPUT DATA

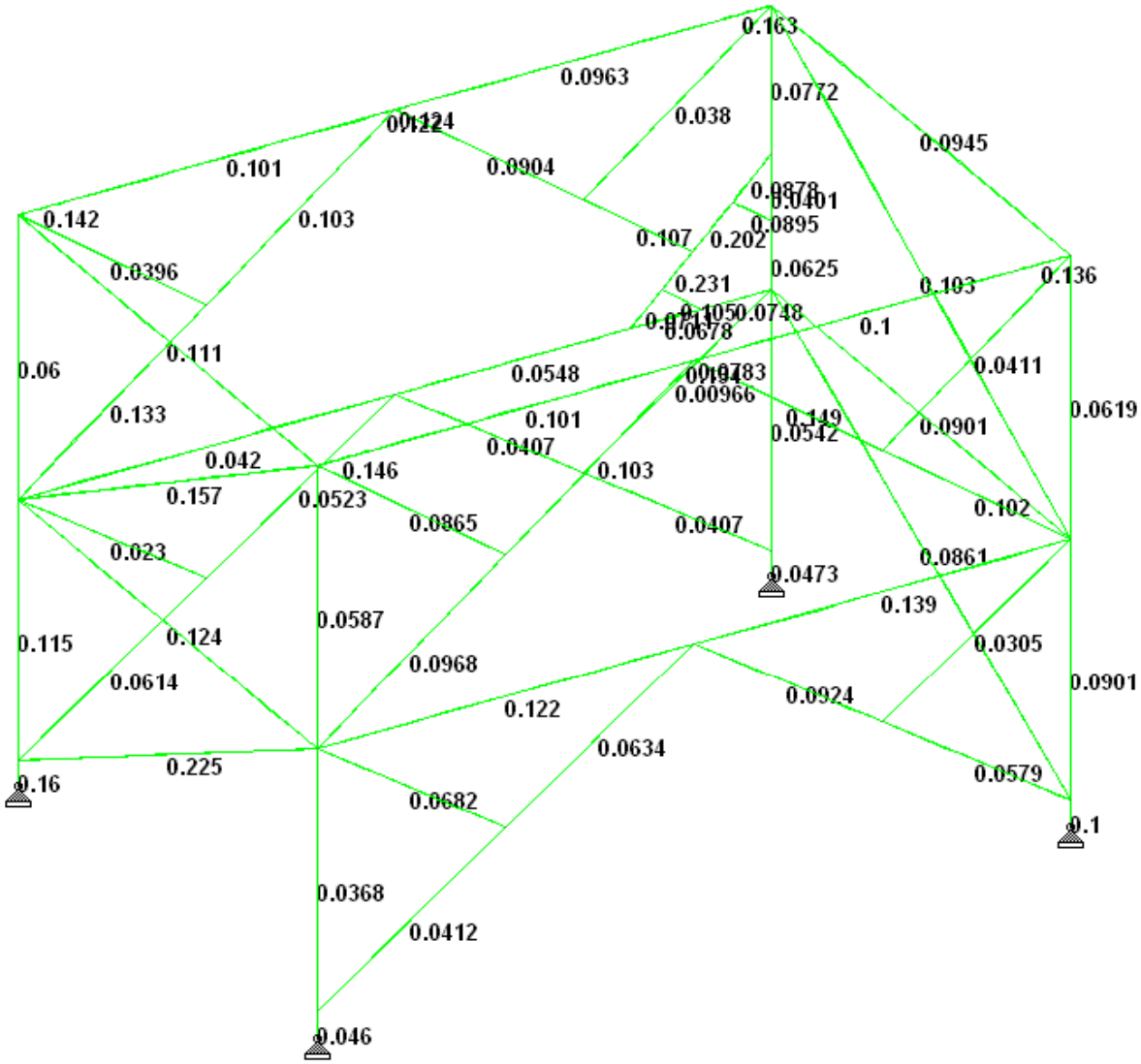

UTILIZATION RATIO FOR MAIN FRAME ELEMENTS.
Values for the worse load condition.
(Values greater than 1 are not allowable)

STAAD.PRO MODEL - OUTPUT DATA

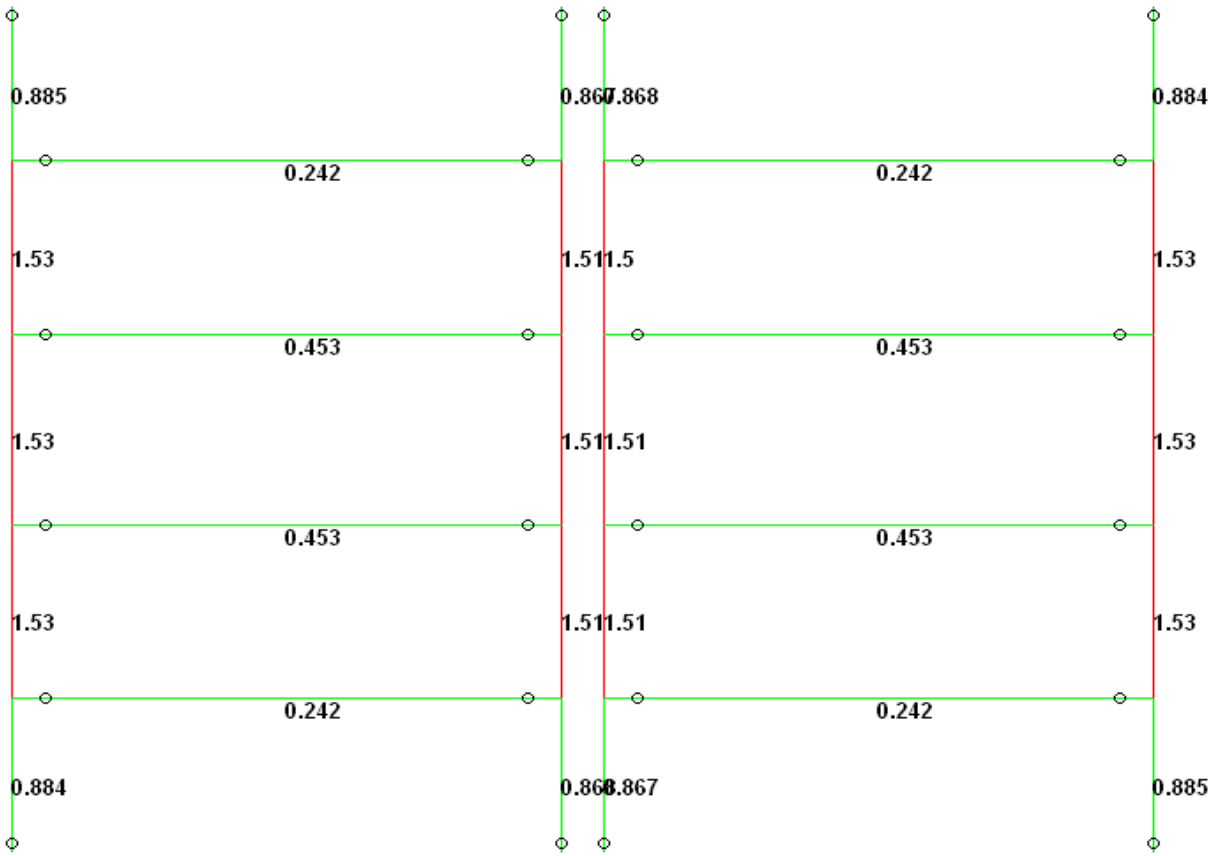

UTILIZATION RATIO FOR UPPER LEVEL ELEMENTS.
Values for dead and live load (water) only.
(Values greater than 1 are not allowable)

LIME CONTACTOR UNIT
NTS

LIME CONTACTOR UNIT
NTS

LIME CONTACTOR UNIT
NTS

LIME CONTACTOR UNIT
NTS

BACKWASH SLUDGE HOLDING BASIN
NTS

BACKWASH SLUDGE HOLDING BASIN
NTS

HAZEN AND SAWYER
Environmental Engineers & Scientists

WINSON WATER TREATMENT PLANT
BID PACKAGE 3: WTP REHABILITATION

EXISTING CONDITIONS
PHOTOS
EXHIBIT 3-3

PLOT DATE: 9/19/2012 3:51 PM BY: RANDERSEN

XREFs=

File = C:_BZProjects\44238-004\Drawings\Bid Package 3 - WTP

9/19/2012 3:51 PM

BACKWASH SLUDGE HOLDING BASIN

NTS

BACKWASH SLUDGE HOLDING BASIN

NTS

BACKWASH SLUDGE HOLDING BASIN

NTS

BACKWASH SLUDGE HOLDING BASIN

NTS

HSPS PUMP ROOM

NTS

HSPS PUMP ROOM

NTS

WINSON WATER TREATMENT PLANT
BID PACKAGE 3: WTP REHABILITATION

EXISTING CONDITIONS
PHOTOS
EXHIBIT 3-4

HAZEN AND SAWYER
Environmental Engineers & Scientists

PLOT DATE: 9/19/2012 4:00 PM BY: RANDERSEN

XREFs=

File = C:_BZProjects\44238-004\Drawings\Bid Package 3 - WTP Rehabilitation\Exhibit 3-4 Existing Conditions Photos.dwg Layout: 1 Date: 9/19/2012 3:59 PM

HSPS PUMP ROOM
NTS

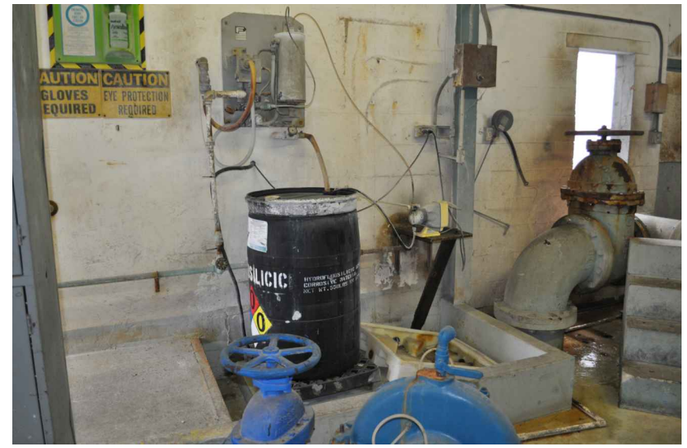

HSPS PUMP ROOM
NTS

HSPS PUMP ROOM
NTS

HSPS
NTS

ELECTRICAL ROOM FLOOR GAP
NTS

ELECTRICAL ROOM FLOOR GAP
NTS

WINSON WATER TREATMENT PLANT
BID PACKAGE 3: WTP REHABILITATION

EXISTING CONDITIONS
PHOTOS
EXHIBIT 3-5

HAZEN AND SAWYER
Environmental Engineers & Scientists

PLOT DATE: 9/19/2012 4:10 PM BY: RANDERSEN

XREFS=

File = C:_BZProjects\44238-004\Drawings\Bid Package 3 - WTP [illegible] 9/19/2012 4:10 PM

1.5 MG FINISHED WATER STORAGE TANK

NTS

0.75 MG FINISHED WATER STORAGE TANK

NTS

OPERATIONS BUILDING WALKWAY CANOPY

NTS

OPERATIONS BUILDING WALKWAY CANOPY

nts

OPERATIONS BUILDING WALKWAY CANOPY

nts

OPERATIONS BUILDING WALKWAY CANOPY

nts

HAZEN AND SAWYER
Environmental Engineers & Scientists

WINSON WATER TREATMENT PLANT
BID PACKAGE 3: WTP REHABILITATION

EXISTING CONDITIONS
PHOTOS
EXHIBIT 3-6

PLOT DATE: 9/19/2012 4:27 PM BY: RANDERSEN

XREFs=

File = C:_BZProjects\44238-004\Drawings\Bid Package 3 - WTP Rehabilitation\Exhibit 3-6 Existing Conditions Photos.dwg Layout: 1 9/19/2012 4:26 PM

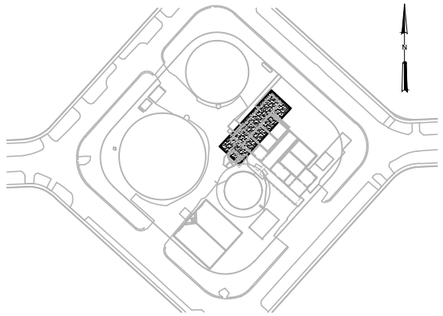

LOCATION MAP

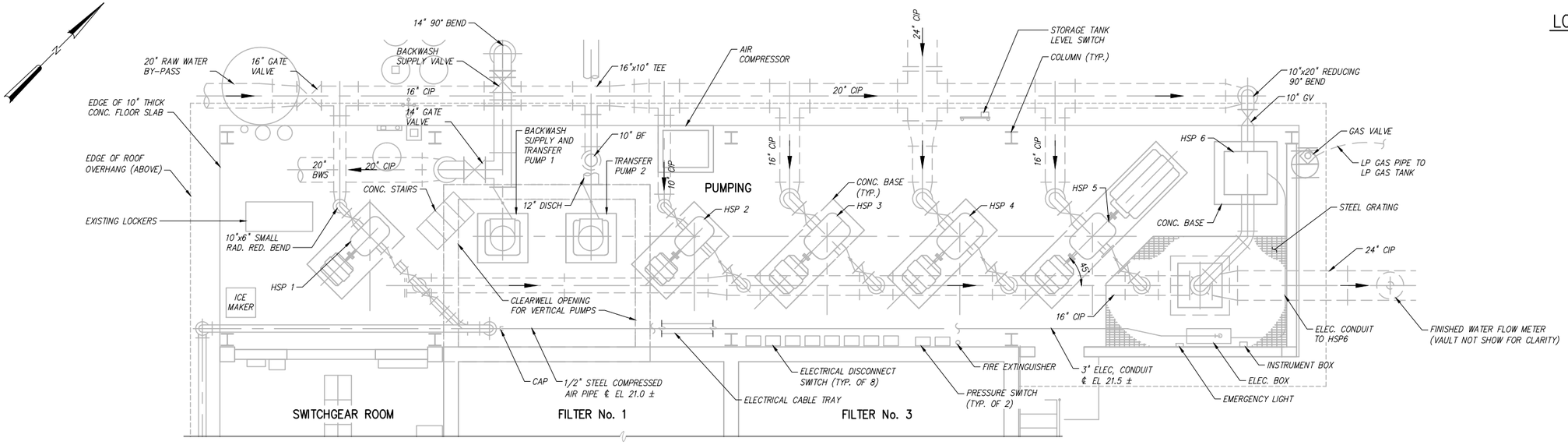

DEMOLITION PLAN

1/4"=1'-0"

LEGEND:

EXISTING

PROPOSED

TO BE REMOVED

1/4"=1'-0" 1 0 1 2 3 7'

HAZEN AND SAWYER
Environmental Engineers & Scientists

WINSON WATER TREATMENT PLANT
BID PACKAGE 3: WTP REHABILITATION

HIGH SERVICE PUMP STA. ROOM DEMOLITION AND UPGRADES
EXHIBIT 3-7

PLOT DATE: 9/19/2012 4:28 PM BY: RANDERSN

XREFs= ..\Base-BP3\M-BP1-Filters-Plan-Bottom-X,..\Base-BP3\S-BP1-Filters-Plan-Bottom-X,..\..\Base\C-Site-Survey-X,..\Base-BP3\C-Site-Pipe-X

File = C:_BZProjects\44238-004\Drawings\Bid Package 3 - WTP Rehabilitation\7 Plan Sheets\Demolition Plan.dwg Layout = 7-Demo-Plan-Sheet 9/19/2012 4:28 PM

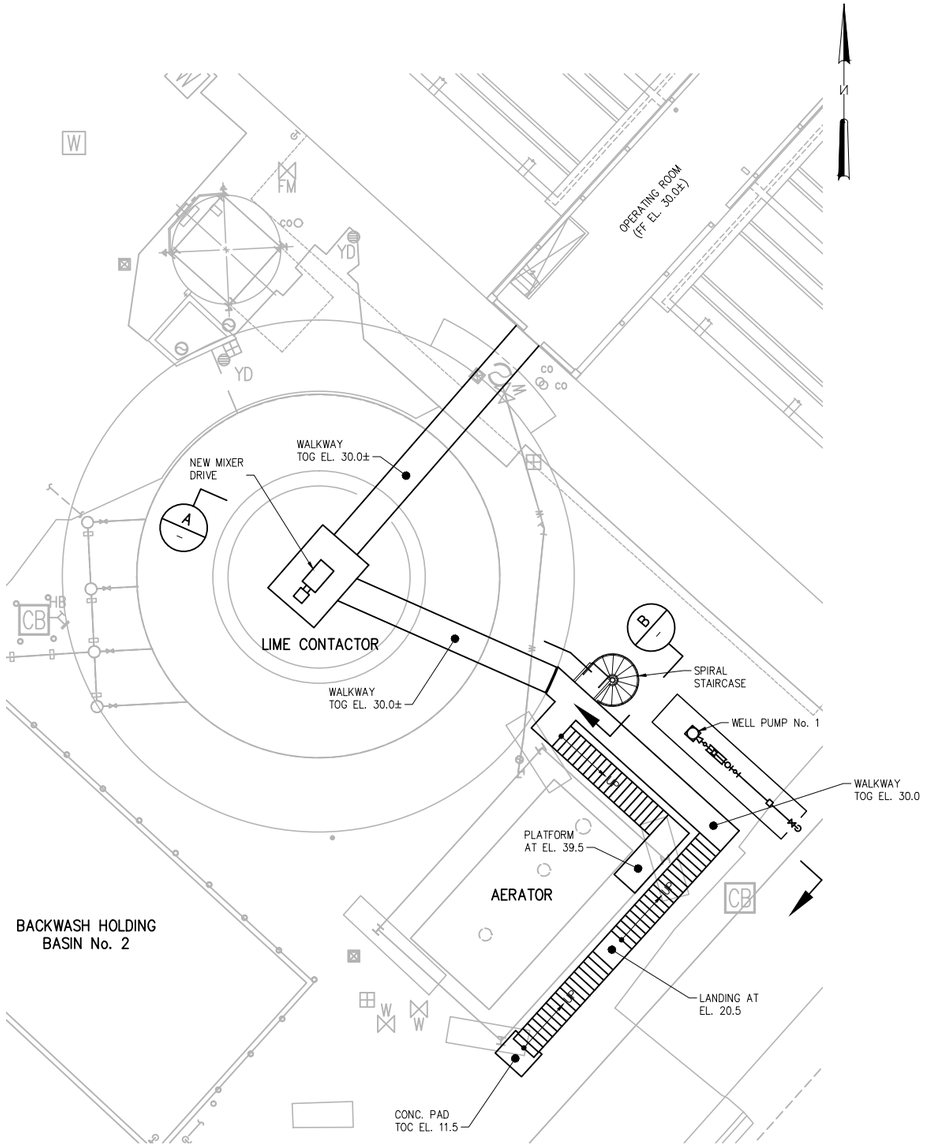

PROPOSED PLAN

1"=10'

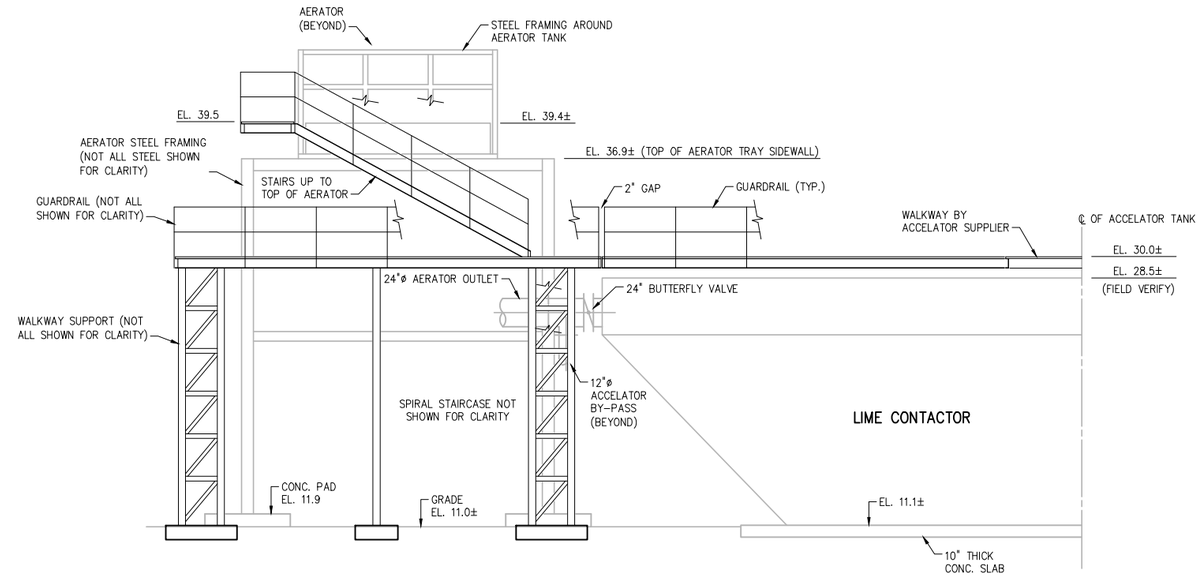

SECTION A

N.T.S.

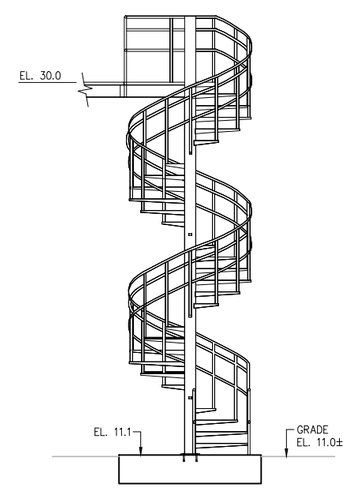

SECTION B

N.T.S.

LEGEND:

EXISTING

PROPOSED

EL. : ELEVATION

FF : FINISHED FLOOR

TOC : TOP OF CONCRETE

TOG : TOP OF GRATING

HAZEN AND SAWYER

Environmental Engineers & Scientists

WINSON WATER TREATMENT PLANT

BID PACKAGE 3: WTP REHABILITATION

PROPOSED AERATOR STAIRCASE

EXHIBIT 3-8

PLOT DATE: 9/19/2012 4:29 PM BY: RANDERSON

XREFs= ..\..\Base\C-Site-Survey-X

File = C:_BZProjects\44238-004\Drawings\Bid Package 3 - WTP [illegible] 9/19/2012 4:29 PM

TECH MEMO 4 – PROPOSED PROCESS IMPROVEMENTS

HAZEN AND SAWYER
Environmental Engineers & Scientists

Hazen and Sawyer, P.C.
4000 Hollywood Boulevard
Seventh Floor, North Tower
Hollywood, Florida 33021
(954) 997-0066
Fax: (954) 987-2949

Technical Memorandum No. 4 – BODR
City of North Miami Winson WTP
Proposed Process Improvements

To: Distribution

From: Hazen and Sawyer, P.C.

Date: February 2013

Preamble

A total of nine Technical Memoranda (TM) comprise the Basis of Design Report (BODR) for the Winson Water Treatment Plant BP 3 WTP Rehabilitation Project. Work on these TMs was initiated with a Kick-off Meeting on May 31, 2012. However, on October 24, 2012 the City authorized Hazen and Sawyer to proceed with revisions to Technical Memoranda to include newly acquired City property located adjacent to the northeast perimeter of the Winson WTP into the BODR. This direction necessitated the relocation of proposed Administration Building from the northwest to the southwest corner of the WTP site, and that the proposed 2.5 MG Water Storage Tank, in the southwest corner of the site was replaced with two 1.25 MG Storage Tanks to be located on the new City property. In addition, the City also requested that the Administration Building conceptual floor plan be revised to further increase the size of the Emergency Operations Center (EOC), as well as provide a dedicated EOC access to the planned Observation Deck. These requests impacted six of the eight TMs, which were either nearly complete or already accepted by the City, as well as required the development of a new Bid Package 4 to address the construction of the two 1.25 MG water storage tanks and appurtenant improvements on the City acquired land.

As a result, the following TMs will be revised, with original versions of the TMs included as Appendicies to the Basis of Design Report.

- TM 2 – On site Raw Water System Improvements: Revise to reflect the new Administration Building and Storage Tank location and their impacts on Well No. 2.
- TM 4 – Proposed Process Improvements – Revise to address changes to noted site layout as well as process impacts required for operation of the WTP with only the existing 0.75 MG Storage Tank until the two new 1.25 MG Storage Tanks are constructed on the newly purchased land.
- TM 5 – Proposed Administration Bldg – Revise to reflect City request for a larger EOC with dedicated access to the observation deck. Also requires site layout and additional parking revisions
- TM 6 – I/C System – Revise to address changes to noted site layout as well as impacts to proposed PLC locations.

- TM 7 – Electrical Improvements – Revise to address changes to noted site layout as well as impacts due to new location of electrical room on generator ductbank and site feed ductbanks.
- TM 8 – Site Improvements – Revise to address changes to noted site layout as well as impacts to previously proposed stormwater management plan

Note that this TM 4 represents a REVISION to the TM 4 - DRAFT version dated September 27, 2012.

1.0 Background and Purpose

The City of North Miami owns and operates the Winson Water Treatment Plant (WTP), a conventional lime softening facility with a permitted capacity of 9.3 mgd. The WTP treats raw water from the Biscayne Aquifer and serves areas within the City limits as well as the Village of Biscayne Park, portions of Golden Glades, Westview, Pinewood, and surrounding areas of unincorporated Miami-Dade County. Potable water is supplied from the Winson Water Treatment Plant (WTP) and interconnects with the Miami-Dade County Water and Sewer Department (MDWASD), providing approximately 8.5 mgd AADF and 4.5 mgd AADF to users respectively. The WTP was constructed in the early 1960s.

In 2007 the City prepared a report titled Winson Water Treatment Plant Expansion Feasibility Study (Feasibility Study) indicating that the existing lime softening treatment system and Biscayne Aquifer wellfield infrastructure were at or near the end of their useful life. Based upon subsequent on-site observations and discussions with City staff, H&S generally concurred with the recommendations of the Feasibility Study. To this end, the City has determined that WTP facilities should be rehabilitated to ensure continued reliability through the year 2030. Due to budget constraints, expansion of the treatment capacity is currently on hold. Bid Package 3: WTP Rehabilitation Project (BP 3) proposes to rehabilitate existing WTP unit processes throughout the facility while maintaining the existing treatment capacity fixed at 9.3 mgd.

The purpose of this TM is to provide a general overview of proposed process component rehabilitation work to be implemented under the scope of the BP 3 Project. For details regarding the tie-in of proposed improvements to the new Distributed Control System reference TM 6 – Plant Control and Information System. Corresponding electrical improvements are addressed in TM 7 – Electrical System Improvements. TM 8 – General Site and Facility Improvements includes discussions on perimeter gates, landscaping, stormwater management and roadway improvements.

2.0 Existing Conditions

Existing WTP unit processes are addressed in TM 1 – Existing Facility Overview.

3.0 Proposed Improvements

The Winson Water Plant employs various unit processes to treat high quality raw water from the Biscayne Aquifer and deliver it to users. A plan view of the existing facility is presented as Exhibit 4-1. Note that the Contractor staging area to the north of the filter building will be installed by the BP 1 Contractor and as agreed with City will be pre-existing when the BP 3 Contractor commences work. As such, this area will be available for use by the BP 3 Contractor until the proposed Master Pump

Station work commences. With limited staging area available, the BP 3 Contractor will benefit by having access to this area beforehand and during construction of the proposed Administration Building and other facilities not directly impacting the proposed Master Pump Station. TM 9 includes a detailed description of the proposed sequencing of the project in four phases; please reference it accordingly for details.

Brief discussions of each proposed unit process improvement / upgrade and capacity criteria follow. A plan view of the proposed WTP facilities is presented as Exhibit 4-9. The corresponding Proposed Process Diagram and Design Criteria Tabulation are included as Exhibits 4-10 and 4-11. Detailed process and instrumentation diagrams (PIDs) together with control narratives will be prepared during the detail design phase of the project.

Raw Water Supply Wells: The two on-site wells will be redeveloped and associated pumping equipment and appurtenances will be replaced as discussed in TM No. 2 - On-Site Raw Water System Improvements.

Raw Water Aerator Unit: The WTP currently has one aerator tower supplied with two "waterfall-type" fiberglass aerator units with a reported total capacity of 20 mgd. The existing aerator containment pan and enclosure structure allows splash-over. This has become both a nuisance and can contribute to corrosion of adjacent improvements. In addition, aerator maintenance is difficult as the bottom of the containment pan is approximately 26-ft above grade and no ready means of access to the top of the support structure are available.

To address these conditions, the following improvements are proposed:

- Panel type inserts filled with mist eliminator mesh material will be installed around the intermediate perimeter of the existing aerator enclosure. The panels will be installed on the inside the enclosure support members so that any captured splash is released back into the containment pan. These proposed mist elimination panels will be designed to be supported off the cross members of the enclosure and will remove 95% of water droplets >50 microns in diameter with a headloss of approximately 2-inches in a continuous 25 mph wind. An illustration of the proposed panel concept is presented in Exhibit 4-2. It is important to note that the intent of this design is that the mist elimination panels be removed during storm events. This intent was discussed with and agreed to by City staff. In addition, mist elimination materials are designed to provide minimal impact to cross-flow ventilation and the remainder of the aerator enclosure structure remains open to the atmosphere - so impact to aerator efficacy on CO_2, H_2S, volatile compound and/or iron oxidation is not anticipated.
- A new stairwell structure will be installed around the existing aerator structure. This structure will be designed with two landings; one to allow access to a new Lime Contactor walkway, and the other to allow access to the top level of the aerator structure for access to the proposed mist eliminator panels and aerator units. An illustration of the proposed improvement is presented in Exhibit 4-3.

Lime Contactor Unit – The existing lime-softening unit is an "Accelator" Model as furnished by Infilco Degremont. Based on prior studies conducted by the City, the internal mechanism of the Accelator unit, including walkways and drive, has generally reached the end of its useful life and requires replacement.

To address these conditions, the following improvements are proposed:

- The lime contactor mechanism, walkways and drive will be replaced. As the "Accelator" unit is a sole-source product, the price of the proposed equipment will be pre-negotiated with the Supplier and included in the contract documents and Bid Schedule to ensure a fair and equitable procurement process. The mechanism will be comprised of similar components to the existing unit, with a variable frequency drive added to the new offset rotor for enhanced operability.
- The existing welded steel tank that houses the lime contactor will be refurbished by sand-blasting and application of protective coatings to both interior and exterior surfaces. For additional details regarding the rehabilitation of this structure, reference TM 3 – Structural Evaluations and Improvements.

Lime Blow-Off Valves: The four existing waste lime blow-off valves are pneumatically actuated angle type diaphragm units. Prior studies have recommended replacement of these units. Two alternatives are available for City consideration:

- Alternative 1: Replace the units with like and kind valves operators. This installation is as recommended by the Accelator Supplier and would be included as a component of the sole-source approach noted above.
- Alternative 2: Replace the units with new motor operated plug valves. The plug valves would close slightly slower than the pneumatically actuated diaphragm units, but have been successfully used by other local utilities. In addition, the filter gallery is being upgraded with motor operators, and this approach would result in product uniformity at the WTP.

Under either approach, unit operation will be tied into the proposed Distributed Control System (DCS) and requisite controls will be provided for both LOCAL and REMOTE Operation.

Based on discussion with the City on October 2, 2012, Alternative 2 (electric operators) will be implemented on the BP 3 Project

Lime Slaker and Silo: The existing lime slaker, silo and associated equipment were supplied by Coffman Systems and are reported to be functioning adequately. However, the slaker mixer motor and gear box are mounted directly below the rotary valve lime feeder and maintenance requires that the feeder structure be disassembled. In addition, the City has experienced clogging of slurry lines and water booster pump suction and discharge line surge issues. A backup slaker unit has also been requested to be furnished under the BP 3 Project.

Three alternatives are available to the City for the furnishing and installation of a second lime slaker.

- Alternative 1: A Coffman Systems unit by can be sole-sourced in the contract documents and installed so as to match the existing slaker unit. This approach would provide the City with two similar units so that parts would be generally interchangeable for maintenance purposes. However, the life of the two pieces of equipment would be disparate, with the existing unit 5 years older than the new item. As with the lime contactor, the price of the slaker equipment would be pre-negotiated with the Supplier and included in the contract documents and Bid Schedule to ensure a fair and equitable procurement process.
- Alternative 2: Prepare a design that allows alternative Suppliers (Chemco, Enpro) to

furnish the second slaker unit. Under this approach the City would end up with two dissimilar units so that parts would not be interchangeable. As with Alternative 1, the life of the two pieces of equipment would be disparate, with the existing unit 5 years older than the new item.

- Alternative 3: Prepare a design that allows alternative Suppliers (Chemco, Enpro) to furnish two new slaker units. Under this approach the City would end up with two equal units so that parts would be interchangeable, but would require retiring the existing Coffman unit after 5 years of service. However, the City would now have two new units with equal life times remaining.

It is also important to note that the addition of a second slaker by simply replacing the existing feed chute with a bifurcated (dual discharge) design is not feasible, as discussions with various lime system suppliers indicates that adding a side chute to the existing orientation would provide insufficient incline to maintain lime transfer to the new slaker without plugging. As a result, the addition of the proposed second slaker unit requires that the rotary valve feeder, existing slaker, grit screw, booster pump and lime eductor installation be dismantled and reconfigured with a bifurcated chute with similar discharge angles on both legs. This design can be retrofit onto the existing lime silo and slaker enclosure as illustrated in Exhibit 4-4.

Note that proposed improvements also include replacement of the existing lime slurry water booster pump and eductor system and lime slurry piping. In addition, a level indicating transmitter will be retrofit onto the Lime Silo. All unit operation will be tied into the proposed DCS.

Based on discussion with the City on October 2, 2012, Alternative 1 (sole source of a Coffman Unit) will be implemented on the BP 3 Project. As with the Accelator, the price of the lime slaker equipment will be pre-negotiated with the Supplier and included in the contract documents and Bid Schedule to ensure a fair and equitable procurement process.

Filters: The WTP is furnished with four down-flow type filters. The filters, surface wash system and filter gallery piping are being refurbished under the Bid Package 1: Filter Rehabilitation Project. Due to limitations regarding the amount of work in BP 1 – made necessary due to a fast-track design schedule to meet State Revolving Fund (SRF) requirements, the rehabilitated filters will continue to use the existing single backwash pump that provides a backwash rate of 12 gpm/sq ft. The filter Local Control Panel (LCP) furnished under BP 1 will be tied into the proposed DCS under the BP 3 Project

Master Pump Station: A new Master Pump Station (MPS) is proposed to replace the function of the existing High Service Pump Station located along the western perimeter of the Filter / Operations Building. The existing High Service Pump Station structure will be refurbished and a new centralized Chemical Handling Facility will be installed as discussed later in this TM. The new MPS will include the following facilities:

- Filter Backwash Pumps: As noted above, the filters are currently serviced by one single vertical turbine type constant speed pump drawing flow from the filter clearwell as the backwash water source. The capacity of the existing backwash pump is 6,300 gpm, providing a backwash rate of 12 gpm/sqft. This is lower than the 18 gpm/sqft backwash rate recommended by filter suppliers. The single backwash pump will be replaced with two 9,720 gpm capacity units and variable frequency

drives. The new pumps will be installed in self-contained "can" enclosures. Based on discussion with the City on October 2, 2012, fully redundant backwash pumps, in lieu of a single backwash pump with a shared duty backwash / transfer "swing" pump design similar to the current installation, will be implemented under the BP 3 Project.

- Filter Backwash Water Availability from Clearwell: Per discussions with filter suppliers, the recommended cycle includes a total of 7.5 minutes of an 18 gpm/sqft backwash rate. This will total 73,000 gallons of filtered water when the new pumps are installed. As the remaining three operating filters will continue to produce filtered water at a rate 4,725 gpm, or 35,400 gallons, a net "shortfall" of 37,500 gallon in the clearwell will occur during the 7.5 minute backwash cycle. Preliminary calculations suggest that a minimum clearwell level of 5-ft would be adequate for operation of the upsized backwash pumps. A 2-ft working volume would provide approximately 44,300 gallons in the clearwell to buffer the estimated 37,500 gallon net outflow. Moreover, backwash and transfer pump control systems will be interlocked to prevent simultaneous operation. Thus, the control system will give preference to the backwash cycle over the transfer cycle. This will also have other benefits such as simplifying disinfection contact time calculations and reporting at the clearwell. Low level alarms will be available for pump protection. A "low-low" level condition would shutdown operation of both transfer and backwash pumps. Full control sequences will be developed during the detailed design phase.
- Backwash Pump Selection: Motor horsepower sizing presented in this TM is based on preliminary sizing of a pump selection with a very steep curve from Peerless Pumps. Therefore, although operating BHP is estimated at 107 HP, the motor size required for non-overloading operation throughout the entire stable range of pump performance is 200 HP. A subsequent selection from Afton Pumps identified an operating BHP of 106 HP with a flatter performance curve to a shutoff head of 125 HP. Final pump selection will be established during detailed design
- Clearwell Transfer Pumps: The filtered water clearwell is located below all four existing filters and the filter gallery, with an extension on the west end that houses the transfer and backwash pumps. Proposed improvements to the backwash pump are discussed above. The existing 6,458 gpm transfer pump conveys filtered water to the 750,000 gallon storage tank via a 20 / 24-inch diameter main. The single pump will be replaced with two 6,458 gpm capacity units with variable frequency drives. The new pumps will be installed in self-contained "can" enclosures. Based on discussion with the City on October 2, 2012, fully redundant transfer pumps, in lieu of a single transfer pump with a shared duty backwash / transfer "swing" pump design similar to the current installation, will be implemented under the BP 3 Project.
- High Service Distribution Pumps: There are currently six centrifugal split-case constant speed pumps at the Winson WTP. The units take suction from the 1.5 MG finished water storage tank and discharge into the off-site distribution system. Based on discussion with plant staff, the installation is based on five duty pumps and one backup unit. All pumps are designed for a discharge pressure of 160 TDH (70 psi) with a combined capacity of approximately 15 mgd. Due to the advanced age of all the pumps, the existing pumps will be replaced with four 3,445 gpm units with variable frequency drives. The new pumps will be vertical turbine type units, installed in self-contained "can" enclosures to minimize construction costs. Proposed high ser-

vice pumps are designed for peak hour demand, which is higher than the fire flow demand. However, it is important to note that the High Service Pumps only serve the area with the WTP rated capacity of 9.3 mgd. The remaining citywide demand is supplied via several interconnects with the Miami Dade WASD system, due to hydraulic limitations in the City's distribution system. During necessary WTP shut downs, it is expected that Miami Dade WASD will supply the entire peak hour demand via the different interconnects in the City's distributions system. Hydraulic modeling conducted as part of the City of North Miami Water Distribution System and Storage System Evaluation Report (Dec 2011) predicted that operating the system with all water supplied by Miami Dade WASD at the 2010 maximum day peak hour demand will result in no nodes with less than 25 psi in the service area. City staff has also confirmed that the system has operated under a 100% Miami Dade WASD system supply without incident.

- High Service Distribution Pump Selection: Motor horsepower sizing presented in this TM is based on preliminary sizing of a pump selection with a very steep curve from Peerless Pumps. Therefore, although operating BHP is estimated at 168 HP, the motor size required for non-overloading operation throughout the entire stable range of pump performance is 200 HP. A subsequent selection from Afton Pumps identified an operating BHP of 145 HP with a performance curve to a shutoff head of 200 HP. Final pump selection will be established during detailed design

The proposed operating characteristics of the proposed MPS are summarized in Table 4-1.

Table 4-1
Proposed Design Criteria
Master Pump Station – Summary

Item	Unit	Value [3]
Backwash Pumps		
No. of Pumps	#	2 (1+1) service
Capacity per Pump	gpm	9,720
Estimated TDH [1]	ft	35
Pump Type	-	Vertical Turbine – Can Mounted
Motor Horsepower, ea	HP	125
Drive Type	-	Variable Frequency
Clearwell Transfer Pumps		
No. of Pumps	#	2 (1+1) service
Capacity per Pump	gpm	6,458
Estimated TDH [1]	ft	40
Pump Type	-	Vertical Turbine – Can Mounted
Motor Horsepower, ea	HP	100
Drive Type	-	Variable Frequency
High Service Distribution Pumps		
WTP Capacity – Average	mgd	9.3
	gpm	6,458
Peak Hr / Average Annual Factor[2]	-	1.60
Minimum Flow Factor	-	0.48

Item	Unit	Value [3]
Required Capacity Range [3]	gpm	3,100 to 10,333
	mgd	4.46 to 14.88
No. of Pumps	-	4
Capacity per Pump	gpm	3,445
Pump Type	-	Vertical Turbine – Can Mounted
Motor Horsepower, ea	HP	200
Drive Type	-	Variable Frequency
Total Operating Capacity [4]		
Minimum (1 Pump @ 60%)	gpm / mgd	2,067 / 2.97
Average (2 Pumps @ 100%)	gpm / mgd	6,890 / 9.92
Average (3 Pumps @ 100%)	gpm / mgd	10,333 / 14.88
Maximum (all Pumps)	gpm / mgd	13,780 / 19.84

[1] TDH Conditions Backwash And Transfer Pumps will be addressed when design of yard piping is completed. Current values used for estimating BHP are shown for general information purposes only.

[2] The Peak Hour/Average Annual factor was developed and utilized as part of the City of North Miami Water Distribution System and Storage System Evaluation Report prepared by H&S on December 2011. The factor was determined to be 1.6 based on the dry weather inflow patterns experienced by wastewater lift stations in the system. Since no hourly plant water supply data is available, it was assumed that the water demand is directly proportional to the wastewater flows in dry weather, with similar diurnal patterns.

[3] Note the City routinely purchases up to 4.5 mgd of water to augment the current 8.5 mgd WTP production capacity to approximately 13.0 mgd (AADF). Therefore, Peak System Demand of approximately 20.8 mgd can be met with the proposed 14.88 mgd (corresponding to a proposed WTP production flow of 9.3 mgd (AADF) firm pumping capacity (3 on-line units + 1 standby unit) plus an increment of purchased water.

[4] Assumes Pump with VFD operates between 60% to 100% of design capacity

Discussions that follow compare alternative MPS locations.

Location of Master Pump Station: Two alternative locations have been identified for the proposed MPS. Each offers advantages and disadvantages as discussed and illustrated below:

- MPS Alternative Location 1: Locate the new MPS adjacent to the west side of the existing Pump Station and to the east of the proposed Administration Building as shown on Exhibits 4-5 and 4-6. This location offers the advantage that it conserves the greatest amount of undeveloped area on-site, leaving open space for future improvement. However, some disadvantages include the need to relocate significant lengths of existing 12-inch distribution main and 24-inch storage tank to high service pump suction lines to clear the area prior to construction. In addition, tie-in to the clearwell for the new Backwash and Transfer Pumps would require extended WTP shutdown (minimum 1 month period), to allow for demolition of existing Transfer and Backwash Pumps and connection of new MPS units, including testing and startup. The WTP cannot remain in service during the switchover since backwash and/or transfer capacity would not be available between the time the existing units are taken off-line for demolition and the new MPS units are accepted for operation. Additional risk is also possible regarding the structural stability of the existing pump station structure during trenching to access clearwell extension tie-in under the slab. Also, the existing ammonia storage containment area would need to be demolished and replaced, adding additional capital cost to the Project.

  The proposed location of the tie-in for the new pumps suction line would be flush with

the bottom of the clearwell extension with a control strategy that maintains a 5-ft minimum clearwell depth to meet Hydraulic Institute Standards (HIS). The total available depth of the existing clearwell extension is 8 ft.

MPS Alternative Location 2: Locate the new MPS to the north of the existing Filter Building, where the Contractor staging area remains in place from the BP 1 Filter Rehab Project, and shown on Exhibits 4-7 and 4-8. This location offers the advantage that it contains minimal pre-existing yard piping necessitating relocation, and offers direct access to the clearwell for tie-in without impact to existing transfer, backwash and high service distribution pumping at the existing station. Locating the MPS here would result in minimal WTP tie-in impacts except for routine hot-taps, and require no relocation of existing transfer and high service piping to access the area for construction. The primary disadvantage to this location is that the original facility plans designate this as the area for future expansion of WTP filtration capacity. However, with water use regulations limiting the availability of additional Biscayne aquifer withdrawals, a need for expansion of filtration capacity is highly unlikely.

As with Alternative 1, the proposed location of the tie-in for the backwash and transfer pumps would be flush with the bottom of the existing clearwell, with a control strategy designed to maintain a 5-ft minimum clearwell depth to meet HIS.

Construction sequencing is much more favorable for Alternative Location 2 than Alternative Location 1, as Alternative Location 1 requires significant yard piping relocations and extended shutdown of the existing High Service Pump Station, with accompanying water purchases from MD WASD during shutdown to allow access for installation of a new Master Pump Station. It is anticipated that excavation work for the installation of the pump station cans will require dewatering under either alternative. To this end, Alternative Location 2 was recommended by the H&S and agreed to by the City during the meeting of .October 2, 2012.

In addition, note that the Master Pump Station layout is shown for conceptual purposes only, and details regarding base slabs, isolation valves and similar items will be developed during the design phase. In general, it is expected that all suction piping and valves will be located underground and pump station discharge manifold piping and valves will be above ground. All pump heads and motors will be above ground and will be easily accessible. Master Pump Station sections will be developed during the detail design phase of the project.

Waste Backwash and Lime Sludge Holding Basin:". The City is currently pilot testing the discharge of waste lime sludge via pumping and discharge to the MDWASD collection system. If a decision is made to continue this operation as a primary means of disposal, the existing truck loading station platform, which has deteriorated beyond repair, will be demolished. As agreed with the City on October 2, 2012, the loading station does not need to be replaced, as suitable backup pumping exists to load trucks in case of an unexpected need. In its place, a new submersible type Waste Lime Sludge Pump Station will be constructed as defined by Alternative 2 in the Technical Memorandum entitled "Winson WTP Lime Sludge Disposal Alternatives Evaluation" dated August 2010. The structural rehabilitation of the existing waste backwash and lime sludge holding basins is addressed in TM 3 entitled "Structural Evaluations and Improvements.

Proposed design criteria are summarized in Table 4-2.

Table 4-2
Proposed Design Criteria
Waste Lime Sludge Pump Station

Item	Unit	Value
Lime Sludge Wasting Cycle [1]	gph	1,567
Pump Station Volume	gal	12,685
Storage Capacity	hrs	8.1
Pump Capacity to MDWASD	gpm	157
TDH	ft	TBD
No. of Pumps	-	2
Type of Pump	-	Submersible – Recessed Impeller
Pump Station Sizing		
Diameter	ft	12
Depth	ft	15
Volume	cuft	1,696

[1] Waste cycle = 5 minutes per hour and 37,600 gpd @ 6% H&S W-WTP Sludge Master Plan Aug 2010

The proposed Waste Lime Sludge Pump Station will operate 10 minutes per hour followed by a 10 minute flushing cycle from the Backwash Holding Basin Decant Pumps to mitigate potential plugging of the discharge force main. The existing decant pumps that return settled backwash flow to the lime contactor unit will also be replaced. Proposed design criteria are summarized in Table 4-3.

Table 4-3
Proposed Design Criteria
Backwash Return (Decant) Pump Station

Item	Unit	Value
Backwash Capacity [1]	gpm	9,720
Total Backwash Volume to Return [2]	gpd	251,410
Return Pump Cycle	hrs / day	20
Pump Capacity	gpm	210
TDH	ft	TBD
No. of Pumps	-	2
Type of Pump	-	Horizontal Centrifugal

[1] Assumes new backwash pumps designed for 18 gpm/sq ft backwash rate

[2] Net 10 mins @ 210 gpm to waste lime flushing = 40,800 gpd

As the waste lime pump station discharges directly into a pressurized MD WASD wastewater transmission main, an air gap will be provided at the pump station between the Waste Lime Blow off and wetwell stored volume. In addition, pump discharge check valves shall be installed and the flushing connection from the waste backwash return pump to the

waste lime pump station will also be provided with requisite backwash flow prevention check valves.

On-Site 1.5 Million Gallon Ground Storage Tank: The existing 1.5 MG welded steel storage tank will be replaced with two new 80-ft diameter and 33-ft sidewall height (1.25 MG capacity each) pre-stressed concrete type tanks, to be located on the recently procured City land adjacent to the northeast perimeter of the WTP. The City will prepare the land (demolition, environmental mitigation as applicable, subsurface preparations, security, platting, etc.) through a stand-alone "Sitework" package. A subsequent BP 4 Water Storage Tank contract document will then be prepared by H&S for the installation of two new 1.25 MG Tanks with appurtenant yard piping and control system tie-ins, on the prepared land parcel. Based on review of the North Miami Code of Ordinances, the WTP has a structure height restriction of 55-ft based on its public use designation. Therefore, the proposed tanks heights are compliant.

As the existing 1.5 MG storage tank will be demolished to make space available on site for the proposed Administration Building, the WTP will operate with only the existing 750,000 gallon tank in service until the BP 4 Project is implemented. Calculations prepared and reviewed with the Miami-Dade Department of Health (MD-DOH) on October 4, 2012, verified that the existing 750,000 gallon storage tank provides sufficient detention time to meet regulatory disinfection criteria, without need of the additional contact time provided by the 1.5 MG Tank. (See Exhibit 4-13) Those calculations assumed a flow of 10,333 gpm (14.88 mgd Peak Hour Flow) as a conservative approach, a 0.3 baffling factor as currently used by the City for reporting purposes, the known clearwell volume and estimated pipe lengths for proposed transfer piping and detention time, and an average free chlorine residual of 0.7 mg/L at the 750,000 gallon tank effluent sampling point as currently practiced by the City. No internal baffling of the Tank was assumed.

As noted, the CxT calculations were reviewed with Paul Andre of the MD-DOH during a meeting held on October 4, 2012, where this proposed approach was verbally approved subject to final review during the formal permitting phase of the BP 3 Project. At that time CxT calculations will be revised to reflect actual pipe lengths to be installed, since design will be completed, and a more conservative baffling factor of 0.1 will be used to reflect newer FDEP guidance criteria. However, due to the planned 5-ft minimum clearwell depth for pump station suction submergence HIS compliance, these new criteria are not expected to have a substantial impact on the minimum 0.75 MG storage tank level needed to maintain CxT compliance.. However, should calculations indicate otherwise, internal baffling will be added to the 0.75 MG Tank design at that time.

Although the CxT calculations indicate that the existing 1.5 MG tank can be demolished without impact to the production capacity of the WTP plant, the proposed work will require that yard piping revisions be made to allow the existing High Service Pump Station to take suction directly from the 750,000 Gallon Storage Tank, as it is currently plumbed to take suction from the 1.5 MG Storage Tank. In addition, staff will need to operate the WTP with only the 750,000 Gallon Storage Tank until the two new 1.25 MG Storage Tanks in BP 4 are constructed and placed into satisfactory operation. To this end, WTP staff should ensure that the 750,000 Gallon Storage Tank is at maximum level every morning before the peak demand period commences, as a means of additional conservatism.

On-Site 750,000 Gallon Ground Storage Tank: As noted above, 1.5 MG Tank is to be demolished and removed to clear space on-site for proposed Administration Building construction. The WTP will then operate with only the 750,000 Gallon Storage Tank in service until two 1.25 MG Storage Tanks are constructed on newly procured City Property to the north of the Winson WTP under the scope of the BP 4 Project. The tank may then be demolished as it has reached the end of its useful life. During WTP service interruptions, it is anticipated that Miami Dade WASD will provide the City with any needed capacity via the various interconnects with the City distribution system.

Hydraulic modeling conducted as part of the City of North Miami Water Distribution System and Storage System Evaluation Report dated December 2011 predicted that operating the system with all the water supplied by Miami Dade WASD at the 2010 maximum day peak hour demand will result in no nodes with less than 25 psi in the service area. City staff has also confirmed the system has been operated with 100% of water supplied by the Miami Dade WASD system without incident. A reference has been added accordingly.

In addition, fire flow requirements are addressed in the noted Evaluation Report. In general, the report indicates that the existing, and consequently proposed, high service pumps are designed for peak hour demand, which is higher than the fire flow demand. Therefore, the portion of the City distribution system served by the WTP meets fire flow requirements, with the remaining areas supplied via interconnects with Miami Dade WASD system.

Existing Filter / OPS Building: This building will continue to house the operating filters, clearwell and a proposed Chemical Handling Facility to be located where the existing High Service Pump Station is currently located. However, no additional improvements will generally be made to the existing structure or interiors, as the intent of BP 3 is to construct the following facilities to replace similar uses in the existing Building:

- A new Administration Building to replace the WTP control room, laboratory, operations offices, restrooms, lockers, showers and electrical rooms.
- A new Master Pump Station with replacement backwash, transfer and distribution pumps. A new base slab will be installed in the existing high service pump area once existing pumps, piping and supports are demolished, so that the City may use that area for general storage.

As agreed with the City of North Miami Building Department, the existing building will remain in use without change to Occupancy Type. Therefore, no upgrades to establish current Code compliance are contemplated in this work effort.

Chemical Handling Facility: Existing fluoride, ammonia, coagulant aid, and a new anti-coagulant aid chemical storage and feed systems are to be replaced with new facilities housed within the High Service Pump Station structure, which is being abandoned as a result of the new Master Pump Station. This refurbished process area is herein referred to as the Chemical Handling Facility. During the October 4, 2012 meeting with MDDOH, the proposed design concept for the various chemical storage and feed systems were discussed. During the meeting, Mr. Paul Andre indicated that in general, chemical day tanks would not be needed. However, a day tank is provided for the proposed fluoride system to facilitate chemical addition inventory control and for public safety.

A conceptual plan of the Chemical Handling Facility layout is presented on Exhibit 4-12. Details will be developed during the design phase. A discussion of system components are presented below.

- Fluoride System: One existing 1.0 gph fluoride pump takes suction from an existing 500 HDPE storage tank located within a cast-in place containment area outside the southwest corner of the existing High Service Pump Station. This single unit will be replaced with two new 1.5 gph metering pumps (1+1 standby). These new metering pumps will be diaphragm type units equipped with electronic stroke controllers to provide flow pacing capability. These new pumps will take suction from a new 90 gallon day tank on a weight scale, supplied from a new 780 gallon capacity bulk storage FRP Tank, which will be provided with a containment area and level sensor to allow monitoring of remaining chemical. Chemical transfer pumps (1+1) will be provided to supply the day tank. Pump suction and discharge piping including a new fluoride injection point into the Transfer Pump discharge line will be also provided.
- Coagulant Aid: One existing 25 gph coagulant aid pump takes suction from a mixing drum located in front of the filter pipe gallery. WTP staff manually combines 20 kg bags of anti-coagulant powder with dilution water in this drum. This installation will be replaced with a new system to be located in the Chemical Handling Facility and consist of the following; two new 20 gph metering pumps (1+1 service) and a new dry feeder/blending package system. A containment area will be constructed to house the package system and appurtenant pumps. These new metering pumps will be diaphragm type units equipped with electronic stroke controllers to provide flow pacing capability. All chemical feed piping will be replaced including a new injection point to the center well of the rehabilitated Lime Contactor unit.
- Aqueous Ammonia: One existing aqueous ammonia metering pump (capacity unknown) takes suction from a 55 gallon drum located in a containment area adjacent to the existing Transfer Pump discharge line. This drum storage / containment area will be replaced with a new carbon steel 1,000 gallon capacity bulk storage tank with a containment area and level sensor to allow monitoring of remaining chemical. The single metering pump will be replaced with two new 2.0 gph metering pumps (1+1 standby) and located inside the Chemical Handling Facility. These new metering pumps will be diaphragm type units equipped with electronic stroke controllers to provide flow pacing capability. Pump suction and discharge piping will be replaced, with the ammonia injection point relocated to the suction of the High Service Pump Station during interim construction operations, and into the connection between the two new 1.25 MG tanks once BP 4 is completed.
- Anti-Coagulant Aid: As discussed earlier, the Waste Lime Sludge Pump Station discharge main will receive a backwash return water flush after each off-site pump cycle. The installation of an anti-coagulant system is recommended to further mitigate the potential for “clogging” of the existing 4-inch force main during disposal of waste lime sludge to the MD WASD system. The chemical to be used for this new system is currently being investigated by the City. For the purpose of preliminary sizing of this system, it is assumed that the City will utilize a CARUS product, Poly Pro 4941-275. Monthly usage is expected in the order of 270 gallons. The chemical will be delivered to the WTP in 275 gallon totes. Further sizing information is provided on Exhibit 4-11. Preliminary provisions will be made to allow room for an anti-coagulant

storage and dosing system at the proposed Chemical Handling Facility. New pump suction and discharge piping will be provided, including a new injection point to the Waste Lime Sludge Pump Station wetwell.

Delivery stations, provided with individual delivery control panels for each type of chemical, will be located outside the proposed Chemical Handling Facility. Delivery trucks will stage on the proposed driveway adjacent to the existing building. Each Chemical Delivery Control Panel will be tied into the new DCS.

Hypochlorite Facilities: The WTP currently uses 12.5% hypochlorite solution for algal control at the Filters and disinfection in the clearwell. Two dedicated chemical metering pumps are used for this purpose with no backup capacity. Hypochlorite is stored in two 2,000 gallon double containment wall tanks located at the southeast corner of the existing Filter / OPS Building. The two tanks are reported to be undersized and require frequent re-order cycles with limited backup storage capacity in case of emergencies. To this end the City has requested that storage capacity be expanded.

Proposed improvements include the installation of a new Hypochlorite Storage and Feed Facility to replace the existing system in its entirety. The new facility will consist of two FRP storage tanks each with a 8,000 gallon capacity and four new 15 gph meter pump units. These new metering pumps will be diaphragm type and equipped with electronic stroke controllers to provide flow pacing capability. Two pumps will be dedicated to pre-chlorination at the lime contactor discharge box (1+1 service) and the other two to disinfection via diffuser in the clearwell (1+1 service).The pumps will take suction from the two new storage tanks, located within a new slab mounted containment area (with cover). one transfer recirculation pump (with a shelf stored spare unit) will be provided to allow for mixing and commingling of the bulk tank contents. Containment leak detectors and level element indicating transmitters will be provided to allow for tie-in of the system to the new DCS. All pump suction and discharge piping will be replaced including injection points.

Chemical delivery to the new hypochlorite facilities would be arranged through a new access gate (Gate No. 5) provided adjacent to the containment area. Delivery trucks will stage in this area adjacent to the proposed hypochlorite truck unloading station control panel.

Attachments

Distribution:	*c:*	*JP Silva*
A. Ghany		*T. Carney*
W. Pierre-Louis		*G. Brown*
P. Vida		*L. Amaral*
B. Vidal		*J. Burke*
J. Broad		*File 44238-004 / 1.2*

BLOCK 14
SUNKIST GROVE
P.B. 8, PG. 49; M.D.C.R.

BLOCK 3
SUNKIST GROVE
P.B. 8, PG. 49; M.D.C.R.

GATE No. 3
PLANT PERSONNEL
ACCESS GATE

750,000 GAL.
TANK No. 2
ø80.1

N.W. 11 AVENUE
(60' RIGHT OF WAY)

GATE No. 4
CONTRACTOR ACCESS GATE AND STAGING AREA TO BE INSTALLED DURING BID PACKAGE 1 (FILTER REHABILITATION). THIS AREA WILL REMAIN UNTIL THE CONSTRUCTION OF OTHER PLANT IMPROVEMENTS. DEMOLITION OF THIS AREA WILL BE INCLUDED IN BID PACKAGE 3.

WELL PUMP
No. 2

CONTRACTOR'S
STAGING AREA

HIGH SERVICE
PUMP STATION

FILTER
No. 1

FILTER
No. 3

PIPE GALLERY

FILTER
No. 2

FILTER
No. 4

BACKUP POWER
GENERATOR

SITE BENCHMARK #2
FOUND NAIL W/ LB4207 DISC
1.04'N.; 0.17'E.; ELEV. 11.31

(FORMERLY ADAMS DRIVE)
N.W. 121 STREET
(60' RIGHT OF WAY)

1,500,000 GAL.
TANK No. 1
ø110.2

LIME SILO

ELECTRICAL
BLDG

ASPHALT

ø47.9
LIME CONTACTOR

ELEVATED
CONCRETE
PLATFORM

WASTE SLUDGE
BACKWASH HOLDING
BASIN No. 2

AERATOR

WELL PUMP
No. 1

GATE No. 2
PLANT PERSONNEL
ACCESS GATE

WASTE SLUDGE
BACKWASH HOLDING
BASIN No. 1

GATE No. 1
CHEMICAL DELIVERY
ACCESS GATE

BLOCK 15
SUNKIST GROVE
P.B. 8, PG. 49; M.D.C.R.

BLOCK 2
SUNKIST GROVE
P.B. 8, PG. 49; M.D.C.R.

SITE BENCHMARK #1
FOUND NAIL W/LB4207 DISC
0.37'S.; 0.04'E.; ELEVATION=10.90

KEYED NOTES:

1. THE CONTRACTOR SHALL MOBILIZE AND STAGE AT THE PRE-EXISTING STAGING AREA LEFT IN PLACE BY THE BP-1 FILTER REHABILITATION PROJECT CONTRACTOR.

2. THESE GATES CAN BE USED BY THE CONTRACTOR FOR ENTRANCE/EGRESS TO THE WTP. THE CONTRACTOR SHALL COORDINATE ACCESS WITH THE CITY STAFF. NO INTERRUPTION TO THE WTP OPERATION WILL BE ALLOWED.

LEGEND:

EXISTING

1"=20'-0"

20 10 0 20'

HAZEN AND SAWYER
Environmental Engineers & Scientists

WINSON WATER TREATMENT PLANT
BID PACKAGE 3: WTP REHABILITATION

EXISTING SITE PLAN

EXHIBIT 4-1

PLOT DATE: 11/27/2012 4:08 PM BY: TBOCAS

XREFs= .\Base\C-Site-Survey-X

File = C:\Users\tbocas\AppData\Roaming\ProjectPoint-2011\Work\projectpoint.buzzsaw.com\hazenandsawyer\North Miami WTP Improvements (44238-004)\Drawings\Bid Package 3 - WTP Rehabilitation\Exhibit 4-1 Existing Site Plan.dwg Layout: 11x17 Date: 11/26/2012 9:23 AM

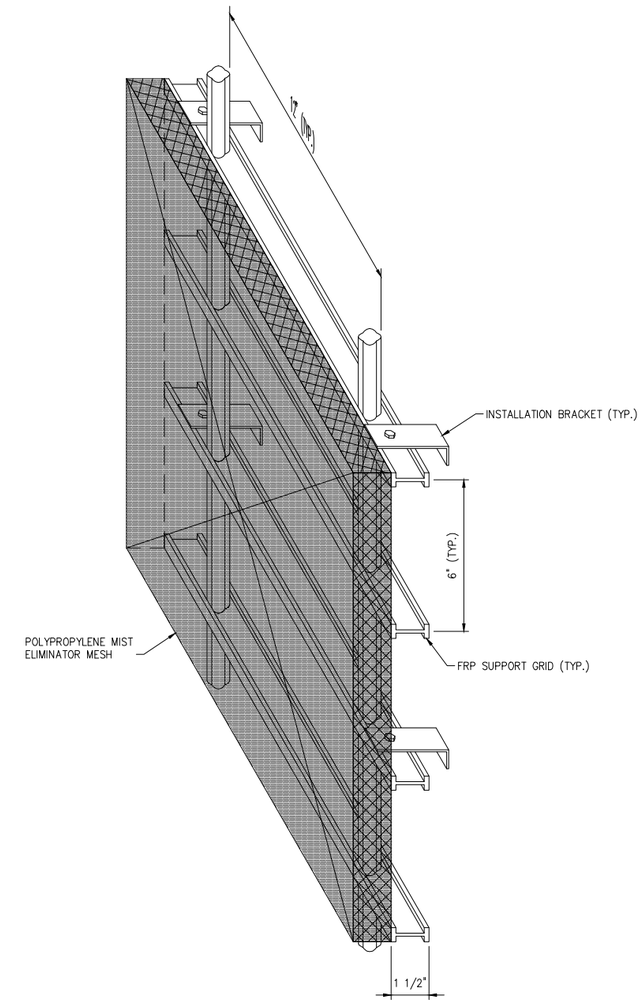

MIST ELIMINATOR PANEL

DETAIL 1

NTS –

NOTE:

1. MIST ELIMINATOR PANELS SHALL BE INSTALLED ON THE INTERNAL SIDE OF THE AERATOR ENCLOSURE.
2. MIST ELIMINATOR PANELS SHALL BE INSTALLED ON ALL INTERMEDIATE FRAME OPENINGS ALL AROUND AERATOR TANK. TOP ENCLOSURE SECTION WILL REMAIN OPEN.

INSTALLATION DETAIL

NTS

HAZEN AND SAWYER
Environmental Engineers & Scientists

WINSON WATER TREATMENT PLANT
BID PACKAGE 3: WTP REHABILITATION

MIST ELIMINATOR PANEL

EXHIBIT 4–2

PLOT DATE: 11/27/2012 4:08 PM BY: TBOCAS
XREFs=
File = C:\Users\tbocas\AppData\Roaming\ProjectPoint-2011\Work\projectpoint.buzzsaw.com\hazenandsawyer\North Miami WTP Improvements (44238-004)\Drawings\Bid Package 3 - WTP
12/26/2012 8:58 AM

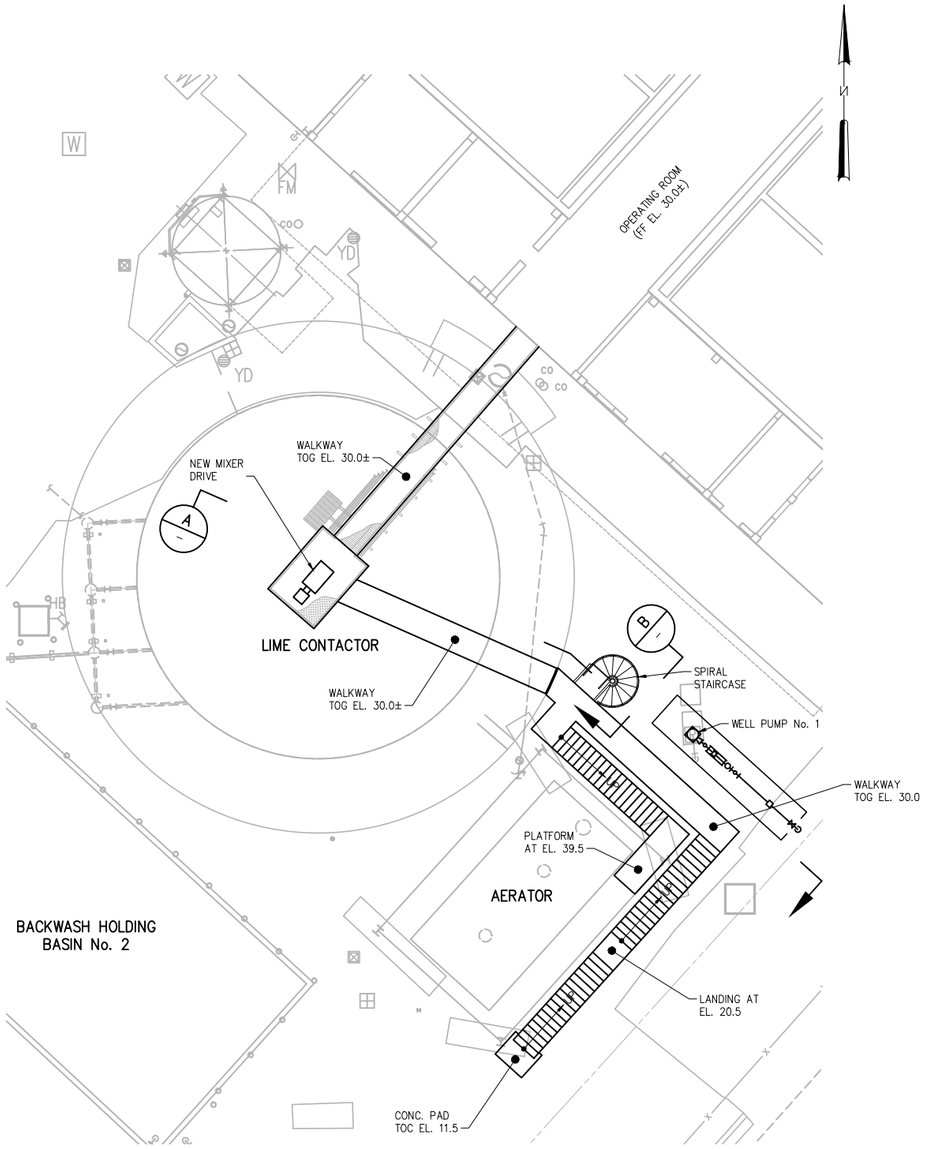

PROPOSED PLAN

1"=10'

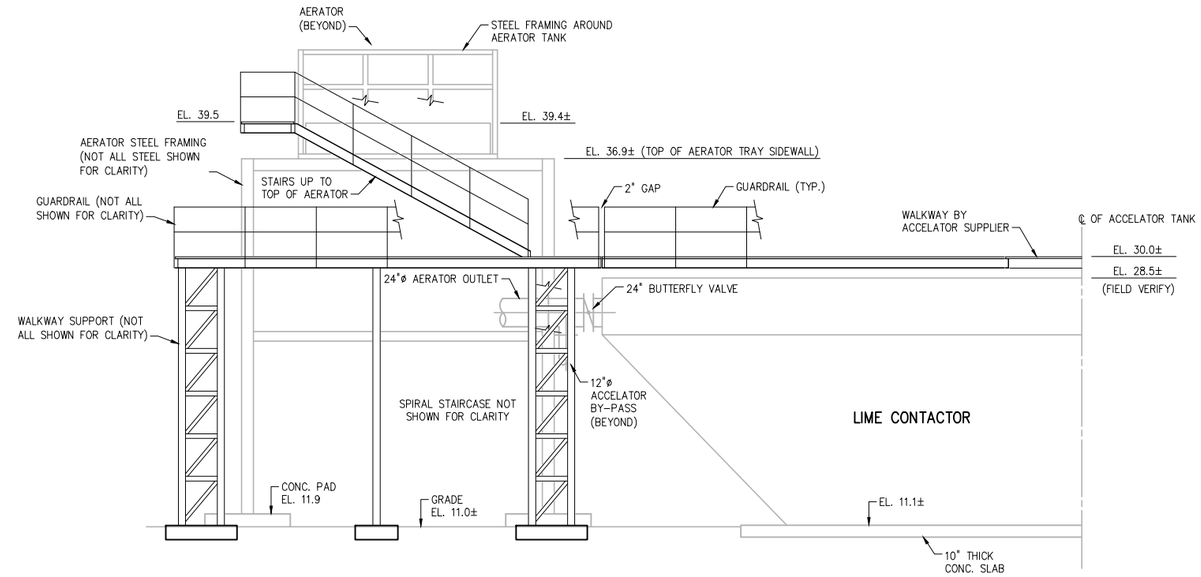

SECTION A

N.T.S.

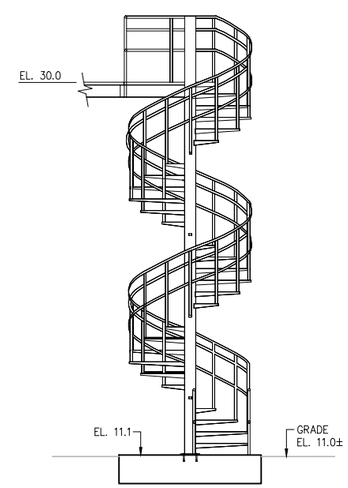

SECTION B

N.T.S.

LEGEND:

EXISTING

PROPOSED

EL. : ELEVATION

FF : FINISHED FLOOR

TOC : TOP OF CONCRETE

TOG : TOP OF GRATING

HAZEN AND SAWYER

Environmental Engineers & Scientists

WINSON WATER TREATMENT PLANT

BID PACKAGE 3: WTP REHABILITATION

PROPOSED AERATOR STAIRCASE

EXHIBIT 4-3

PLOT DATE: 11/27/2012 4:08 PM BY: TBOCAS

XREFs= .\Base\C-Site-Survey-X

File = C:\Users\tbocas\AppData\Roaming\ProjectPoint-2011\Work\projectpoint.buzzsaw.com\hazenandsawyer\North Miami WTP Improvements (44238-004)\Drawings\Bid Package 3 - WTP [illegible] 11/26/2012 9:24 AM

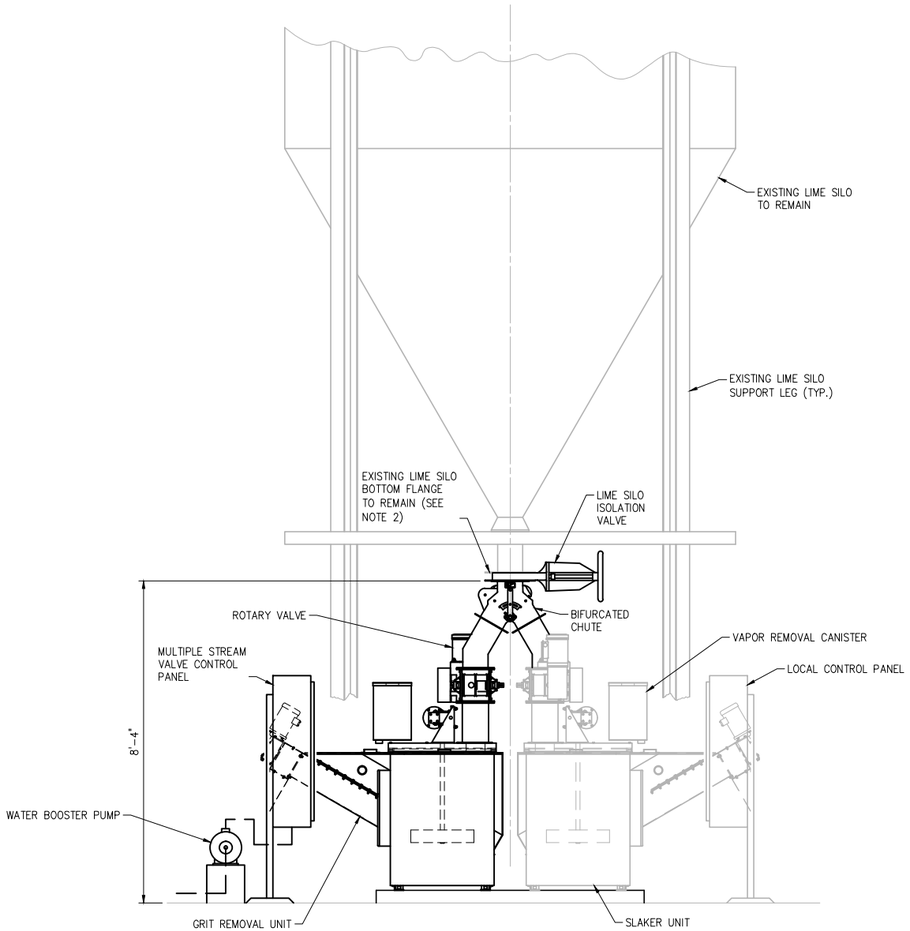

ELEVATION

NTS

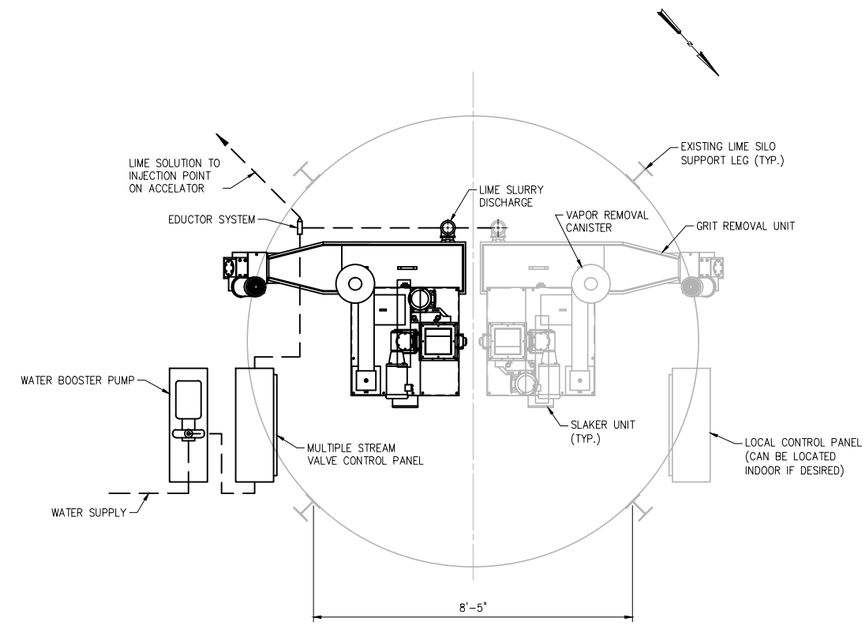

PLAN

NTS

LEGEND:

EXISTING

PROPOSED

NOTE:

1. ADDITIONAL PIPING AND DETAILS NOT SHOWN FOR CLARITY.
2. EXISTING LIME SLAKER COMPONENTS DOWNSTREAM OF SILO BOTTOM FLANGE SHALL BE REMOVED.

HAZEN AND SAWYER
Environmental Engineers & Scientists

WINSON WATER TREATMENT PLANT
BID PACKAGE 3: WTP REHABILITATION

LIME SLAKER SYSTEM

EXHIBIT 4-4

PLOT DATE: 11/27/2012 4:08 PM BY: TBOCAS

XREF's=

File = C:\Users\tbocas\AppData\Roaming\ProjectPoint-2011\Work\projectpoint.buzzsaw.com\hazenandsawyer\North Miami WTP Improvements (44238-004)\Drawings\Bid Package 3 - WTP Rehabilitation\Exhibit 4 - Lime Slaker System.dwg 11/27/2012 3:46 PM

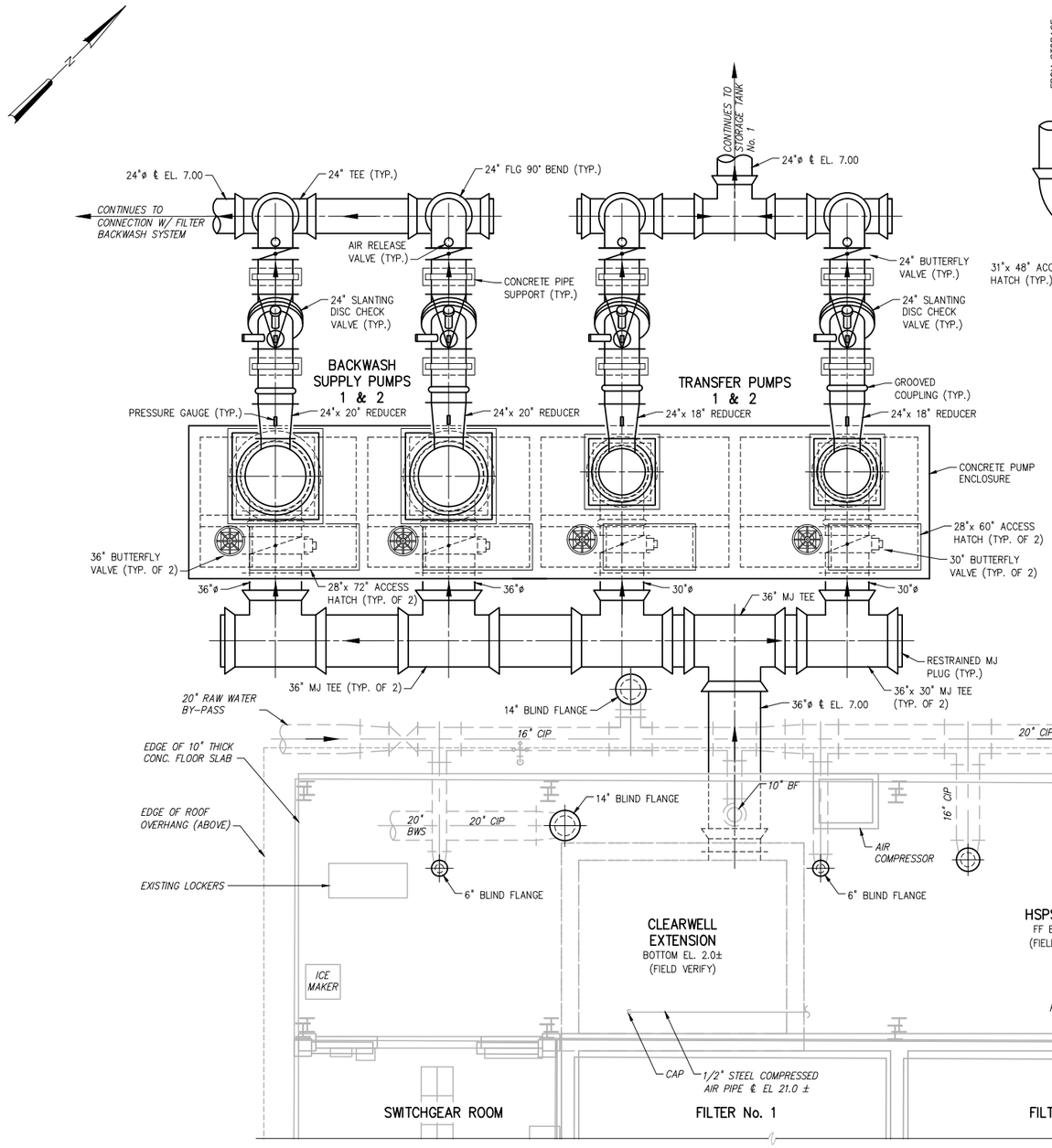

PROPOSED PLAN

1/4"=1'-0"

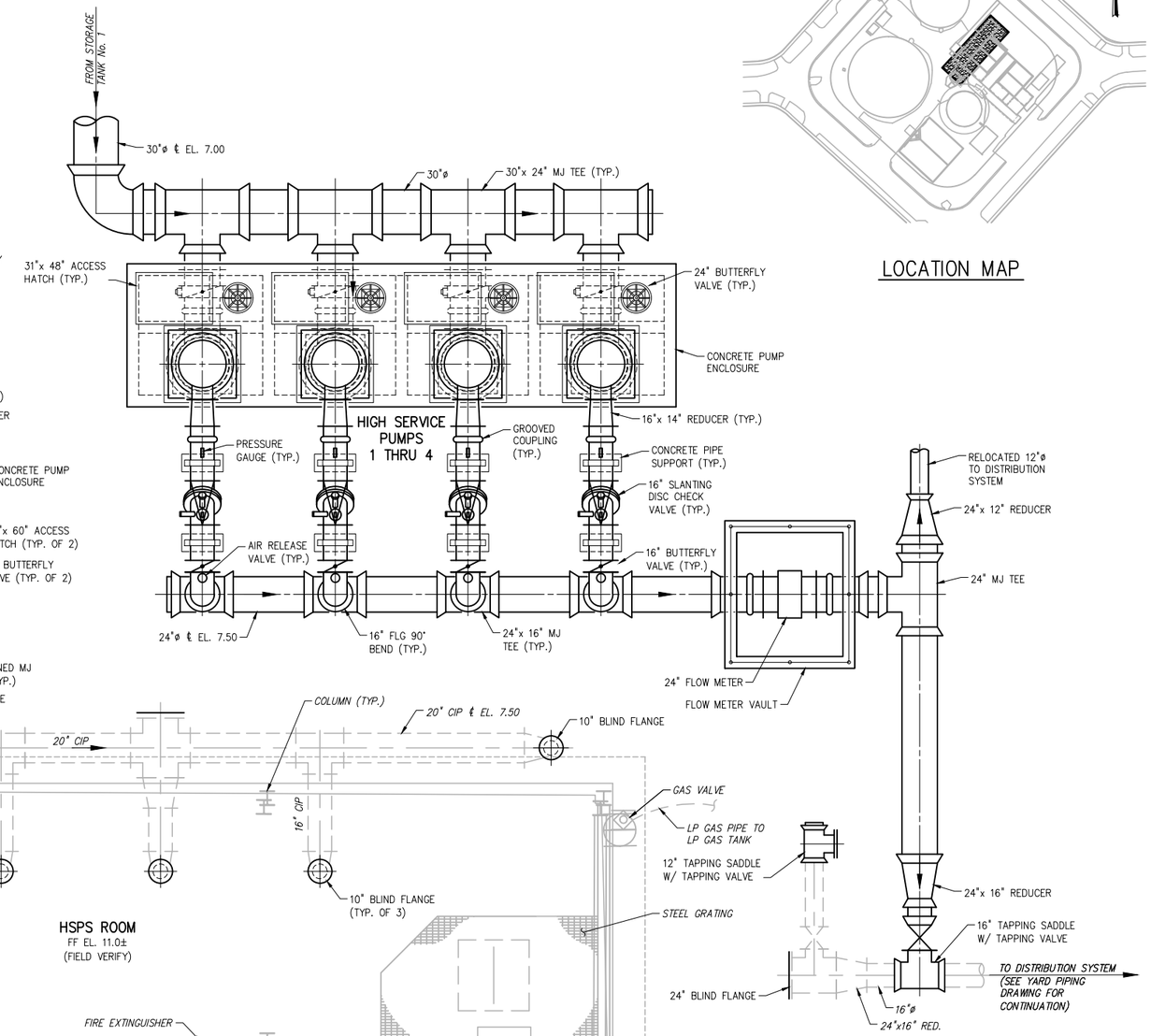

LOCATION MAP

LEGEND:

EXISTING

PROPOSED

1/4"=1'-0"

1 0 1 2 3 7'

WINSON WATER TREATMENT PLANT
BID PACKAGE 3: WTP REHABILITATION

PROPOSED MASTER PUMP STATION
ALTERNATIVE LOCATION 1
EXHIBIT 4-5

HAZEN AND SAWYER
Environmental Engineers & Scientists

BLOCK 14
SUNKIST GROVE
P.B. 8, PG. 49; M.D.C.R.

BLOCK 3
SUNKIST GROVE
P.B. 8, PG. 49; M.D.C.R.

BLOCK 15
SUNKIST GROVE
P.B. 8, PG. 49; M.D.C.R.

BLOCK 2
SUNKIST GROVE
P.B. 8, PG. 49; M.D.C.R.

N.W. 11 AVENUE
(60' RIGHT OF WAY)

(FORMERLY ADAMS DRIVE)
N.W. 121 STREET
(60' RIGHT OF WAY)

GATE No. 3 PLANT
PERSONNEL ACCESS GATE

750,000 GAL.
TANK No. 2

ø80.1

WELL PUMP
No. 2

PROPOSED MASTER
PUMP STATION

CHEMICAL HANDLING
FACILITY

FILTER
No. 1

FILTER
No. 3

PIPE GALLERY

FILTER
No. 2

FILTER
No. 4

BACKUP POWER
GENERATOR

SITE BENCHMARK #2
FOUND NAIL W/ LB4207 DISC
1.04'N.; 0.17'E.; ELEV. 11.31

ELECTRICAL
BLDG

ADMINISTRATION
BUILDING

LIME
SILO/SLAKER

ø47.9

LIME CONTACTOR

AERATOR

WELL PUMP
No. 1

BACKWASH HOLDING
BASIN No. 2

BACKWASH HOLDING
BASIN No. 1

GATE No. 2 PLANT
PERSONNEL ACCESS GATE

GATE No. 1
CHEMICAL DELIVERY
ACCESS GATE

GATE No. 5
CHEMICAL DELIVERY
ACCESS GATE

SODIUM
HYPOCHLORITE
FACILITIES

ASPHALT

GRASS

SITE BENCHMARK #1
FOUND NAIL W/LB4207 DISC
0.37'S.; 0.04'E.; ELEVATION=10.90

1"=20'-0"

20 10 0 20'

LEGEND:

- PROPOSED MPS
- WORK COMPLETED IN PHASE-I, II, III AND IV
- EXISTING
- STORM WATER SWALE
- PAVEMENT

HAZEN AND SAWYER
Environmental Engineers & Scientists

WINSON WATER TREATMENT PLANT
BID PACKAGE 3: WTP REHABILITATION

PROPOSED MASTER PUMP STATION
ALTERNATIVE LOCATION 1 SITE PLAN
EXHIBIT 4-6

PLOT DATE: 2/5/2013 2:13 PM BY: TBOCAS

XREFs= .\Base\C-Site-Survey-X,.\Base\44238-004-Site-CPlan-Prop,.\Base\Base\44238-004-MTank-FPlan-MProp

File = C:\Users\tbocas\AppData\Roaming\projectpoint-2011\Work\projectpoint.buzzsaw.com\hazenandsawyer\north miami wtp improvements (44238-004)\Drawings\bid package 3 - [illegible] 2/5/2013 9:30 AM

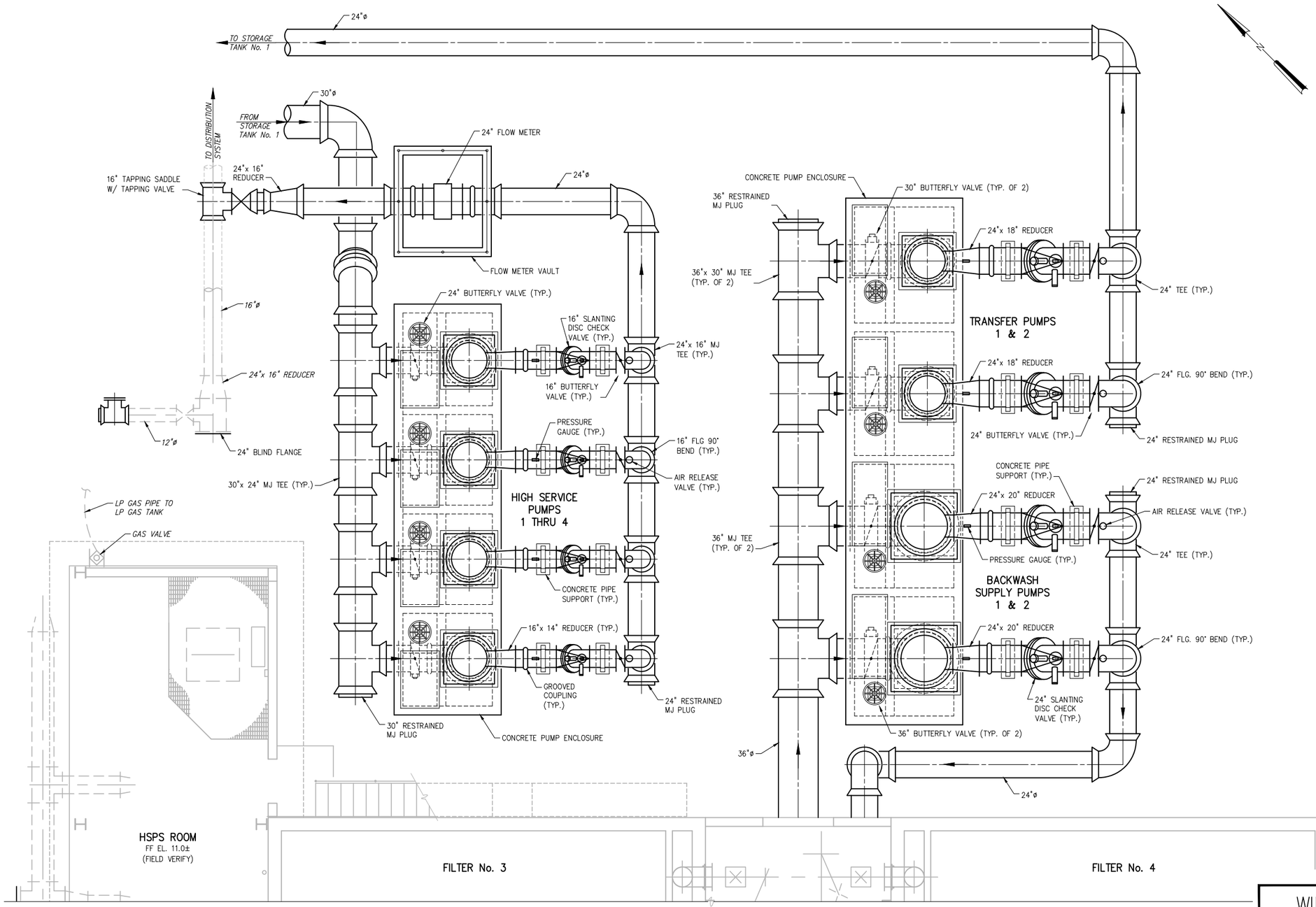

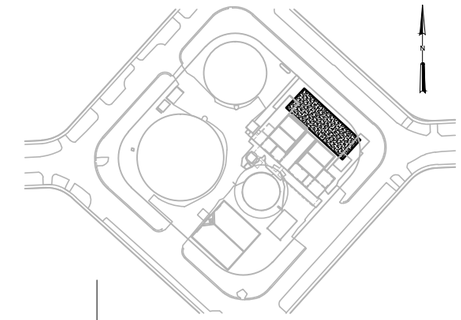

LOCATION MAP

PROPOSED PLAN

1/4"=1'-0"

LEGEND:

EXISTING

PROPOSED

1/4"=1'-0" 1 0 1 2 3 7'

HAZEN AND SAWYER

Environmental Engineers & Scientists

WINSON WATER TREATMENT PLANT

BID PACKAGE 3: WTP REHABILITATION

PROPOSED MASTER PUMP STATION

ALTERNATIVE LOCATION 2

EXHIBIT 4-7

PLOT DATE: 11/27/2012 4:09 PM BY: TBOCAS

XREFs= ..\Base-BP3\M-BP1-Filters-Plan-Bottom-X,..\Base-BP3\S-BP1-Filters-Plan-Bottom-X,..\Base\C-Site-Survey,..\Base-BP3\C-Site-Pipe-X,..\Base-BP3\MN-BP3-HSPS-PLAN (Alt 2)

File = C:\Users\tbocas\AppData\Roaming\ProjectPoint-2011\Work\projectpoint.buzzsaw.com\hazenandsawyer\North Miami WTP Improvements (44238-004)\Drawings\Bid Package 3 - WTP

BLOCK 14
SUNKIST GROVE
P.B. 8, PG. 49; M.D.C.R.

BLOCK 3
SUNKIST GROVE
P.B. 8, PG. 49; M.D.C.R.

BLOCK 15
SUNKIST GROVE
P.B. 8, PG. 49; M.D.C.R.

BLOCK 2
SUNKIST GROVE
P.B. 8, PG. 49; M.D.C.R.

N.W. 11 AVENUE
(60' RIGHT OF WAY)

(FORMERLY ADAMS DRIVE)
N.W. 121 STREET
(60' RIGHT OF WAY)

GATE No. 3 PLANT
PERSONNEL ACCESS GATE

750,000 GAL.
TANK No. 2

ø80.1

WELL PUMP
No. 2

ADMINISTRATION
BUILDING

LIME
SILO/SLAKER

CHEMICAL HANDLING
FACILITY

FILTER
No. 1

FILTER
No. 3

PIPE GALLERY

FILTER
No. 2

FILTER
No. 4

PROPOSED MASTER
PUMP STATION

BACKUP POWER
GENERATOR

ELECTRICAL
BLDG

SITE BENCHMARK #2
FOUND NAIL W/ LB4207 DISC
1.04'N.; 0.17'E.; ELEV. 11.31

ø47.9

LIME CONTACTOR

AERATOR

WELL PUMP
No. 1

BACKWASH HOLDING
BASIN No. 2

BACKWASH HOLDING
BASIN No. 1

GATE No. 2 PLANT
PERSONNEL ACCESS GATE

GATE No. 1
CHEMICAL DELIVERY
ACCESS GATE

GATE No. 5
CHEMICAL DELIVERY
ACCESS GATE

SODIUM
HYPOCHLORITE
FACILITIES

SITE BENCHMARK #1
FOUND NAIL W/LB4207 DISC
0.37'S.; 0.04'E.; ELEVATION=10.90

ASPHALT

GRASS

30'

N

LEGEND:

- PROPOSED MPS
- WORK COMPLETED IN PHASE-I, II, III AND IV
- EXISTING
- STORM WATER SWALE
- PAVEMENT

1"=20'-0"

20 10 0 20'

HAZEN AND SAWYER
Environmental Engineers & Scientists

WINSON WATER TREATMENT PLANT
BID PACKAGE 3: WTP REHABILITATION

PROPOSED MASTER PUMP STATION
ALTERNATIVE LOCATION 2 SITE PLAN
EXHIBIT 4-8

PLOT DATE: 2/5/2013 2:14 PM BY: TBOCAS

XREFS= .\Base\C-Site-Survey-X,.\Base\44238-004-Site-CPlan-Prop,.\Base\Base\44238-004-MTank-FPlan-MProp

File = C:\Users\tbocas\AppData\Roaming\projectpoint-2011\Work\projectpoint.buzzsaw.com\hazenandsawyer\north miami wtp improvements (44238-004)\Drawings\bid package 3 - [illegible] 2/5/2013 11:38 AM

BLOCK 14
SUNKIST GROVE
P.B. 8, PG. 49; M.D.C.R.

BLOCK 3
SUNKIST GROVE
P.B. 8, PG. 49; M.D.C.R.

BLOCK 15
SUNKIST GROVE
P.B. 8, PG. 49; M.D.C.R.

BLOCK 2
SUNKIST GROVE
P.B. 8, PG. 49; M.D.C.R.

N.W. 11 AVENUE
(60' RIGHT OF WAY)

(FORMERLY ADAMS DRIVE)
N.W. 121 STREET
(60' RIGHT OF WAY)

GATE No. 3 PLANT
PERSONNEL ACCESS GATE

750,000 GAL.
TANK No. 2

ø80.1

WELL PUMP
No. 2

ADMINISTRATION
BUILDING

ELECTRICAL
ROOM

NEW PAVEMENT

LIME
SILO/SLAKER

LIME SLUDGE
PUMP STATION

CHEMICAL HANDLING
FACILITY

REFURB.
FILTER
No. 1

REFURB.
FILTER
No. 3

REFURB.
FILTER
No. 2

REFURB.
FILTER
No. 4

PIPE GALLERY

HIGH
SERVICE
PUMPS

TRANSFER
PUMPS

BACKWASH
SUPPLY
PUMPS

PROPOSED MASTER
PUMP STATION

BACKUP POWER
GENERATOR

ELECTRICAL
BLDG

SITE BENCHMARK #2
FOUND NAIL W/ LB4207 DISC
1.04'N.; 0.17'E.; ELEV. 11.31

ø47.9

REFURBISHED
LIME CONTACTOR

AERATOR

WELL PUMP
No. 1

REFURBISHED
BACKWASH HOLDING
BASIN No. 2

REFURBISHED
BACKWASH HOLDING
BASIN No. 1

GATE No. 2 PLANT
PERSONNEL ACCESS GATE

GATE No. 1
CHEMICAL DELIVERY
ACCESS GATE

GATE No. 5
CHEMICAL DELIVERY
ACCESS GATE

SODIUM
HYPOCHLORITE
FACILITIES

SITE BENCHMARK #1
FOUND NAIL W/LB4207 DISC
0.37'S.; 0.04'E.; ELEVATION=10.90

LEGEND:

- PROPOSED MPS
- EXISTING
- STORM WATER SWALE
- PAVEMENT

1"=20'-0"

20 10 0 20'

HAZEN AND SAWYER
Environmental Engineers & Scientists

WINSON WATER TREATMENT PLANT
BID PACKAGE 3: WTP REHABILITATION

PROPOSED WTP FACILITIES

EXHIBIT 4-9

PLOT DATE: 2/5/2013 2:14 PM BY: TBOCAS

XREFs= .\Base\C-Site-Survey-X,.\Base\44238-004-Site-CPlan-Prop,.\Base\Base\44238-004-MTank-FPlan-MProp

File = C:\Users\tbocas\AppData\Roaming\projectpoint-2011\Work\projectpoint.buzzsaw.com\hazenandsawyer\north miami wtp improvements (44238-004)\Drawings\bid package 3 - [illegible] 2/5/2013 11:38 AM

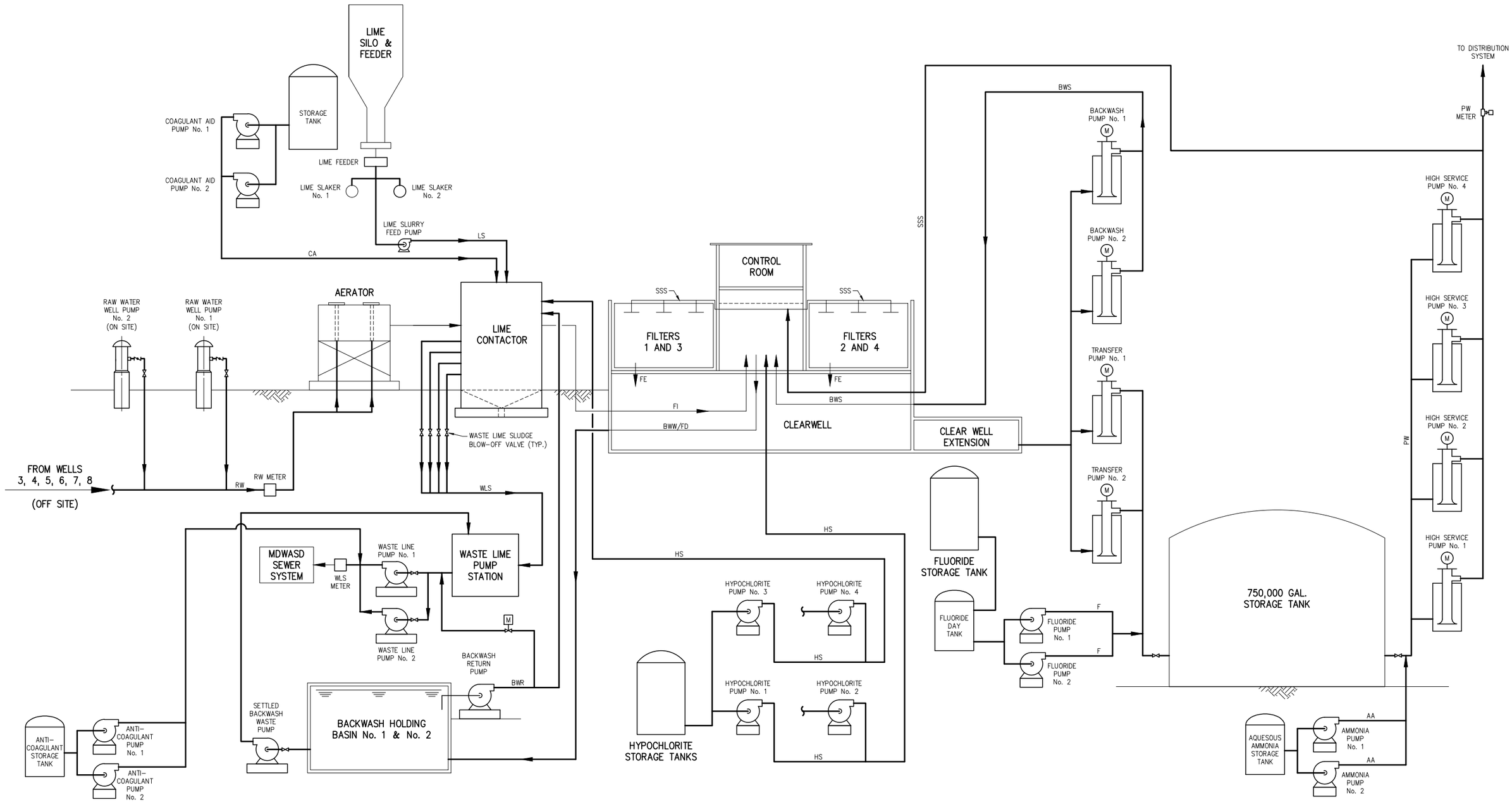

NOTE: CHEMICALS TO BE FLOW PACED.

LEGEND:

EXISTING

PROPOSED

AA	– AQUEOUS AMMONIA	HS	– HYPOCHLORITE SOLUTION
BWR	– BACKWASH RETURN	HSP	– HIGH SERVICE PUMP
BWS	– BACKWASH SUPPLY	LS	– LIME SLURRY
BWW	– BACKWASH WASTE	PW	– POTABLE WATER
CA	– COAGULANT AID	RW	– RAW WATER
F	– FLUORIDE SOLUTION	SSS	– SURFACE SCOUR SUPPLY
FD	– FILTER DRAIN	WLS	– WASTE LIME SLUDGE
FI	– FILTER INFLUENT		
FE	– FILTER EFFLUENT		

HAZEN AND SAWYER
Environmental Engineers & Scientists

WINSON WATER TREATMENT PLANT
BID PACKAGE 3: WTP REHABILITATION

PROPOSED PROCESS FLOW DIAGRAM

EXHIBIT 4–10

PLOT DATE: 2/5/2013 2:14 PM BY: TBOCAS

XREF:

File = C:\Users\tbocas\AppData\Roaming\projectpoint-2011\Work\projectpoint.buzzsaw.com\hazenandsawyer\north miami wtp improvements (44238-004)\Drawings\bid package 3 - wtp rehabilitation\exhibit 4-10 - proposed process flow diagram.dwg 2/5/2013 9:38 AM

Exhibit 4-11
NM Winson WTP
Proposed Design Criteria Summary

DESCRIPTION	UNITS	PROPOSED for BP 3 WTP UPGRADE	COMMENTS
Off-Site Production Wells	-	-	Not in scope of Project
On-Site Production Wells			
Well No. 1			
No. Of Pumps	#	1	
Well diameter	inches	12	per Craig Smith April 2006 Capacity Analysis Report (Table 1-1)
pump capacity	gpm	1,500	
TDH	ft	60	subject to adjustment once well is redevelop well
	BHP	28	assume 80% eff - pending final pump selection
drive motor	HP	40	
total Connected HP	HP	40	
permitted flow	gpm	1,500	
pipe length	ft	135	per M&E/AECOM Feasibility Study Table 2-1 and WUP No. 13-00059-W
pipe diameter	inches	12	
Well No. 2			
No. Of Pumps	#	1	
Well diameter	inches	12	Craig Smith April 2006 Capacity Analysis Report (Table 1-1)
pump capacity	gpm	1,500	
TDH	ft	60	subject to adjustment once well is redevelop well
	BHP	28	assume 80% eff - pending final pump selection
drive motor	HP	40	
total Connected HP	HP	40	
permitted flow	gpm	1,500	
pipe length	ft	210	M&E/AECOM Feasibility Study Table 2-1 says 1100 gpm - corrected per WUP No. 13-00059-W
pipe diameter	inches	10	
Aerator			
no. of units	#	2	Article 2.3.1 M&E / AECOM Feasibility Study
capacity	mgd	20	2 units in one structure
Accelator (Line Softening Unit)			
no. of units	#	1	Article 2.3.1 M&E / AECOM Feasibility Study
Permitted Capacity	mgd	9.30	Operating Permit PWO-000014-2011/2012
	gpm	6,458	
diameter (@ Top minus launders)	ft	61	
area	sf	2,921	
clarifier surface loading rate	gpm/sf	2.21	
drive motor	HP	20	with variable frequency drive proposed
Lime Slaking System			
no. of units	#	2	
Silo Capacity	cuft	2,800	Article 2.3.1 M&E / AECOM Feasibility Study
Lime Feeder	HP	1	
Slaker Capacity	pph	1,000	
Slaker drive motor	HP	0.5	
Slaked Lime Pump	HP	5	
slaked lime grit removal	HP	1	
total connected HP	HP	7.0	
Filters			
number of filters	#	4	
width	ft	18.0	
length	ft	30.0	
filter area, each	sq ft	540	
total filter area	sq ft	2,160	
filter media depth - existing	ft	3.5	per M&E / AECOM Feasibility Study (Page 9)
filter media depth - proposed	ft	3.0	6-inch gravel, 20-inch anthracite, 10-inch sand
filter box depth (bottom slab to trough)	ft	13.0	
filter box volume	cu ft	7,020	
	gals	52,517	
Filter Loading Rates @ Peak Production Capacity of 9.3 mgd			
average (all filters in service)	gpm / sq ft	3.0	
peak (one filter out of service)	gpm / sq ft	4.0	
Filter Pipeline Sizing			
Combined Filter Feed Line Sizing			
Capacity Required	mgd	9.30	

Exhibit 4-11
NM Winson WTP
Proposed Design Criteria Summary

DESCRIPTION	UNITS	PROPOSED for BP 3 WTP UPGRADE	COMMENTS
	gpm	6,458	
	cfs	14.388	
Pipe Diameter - Existing	in	24	
	sq ft	3.14	Target Maximum velocity < 5 fps
	fps	4.6	ok
Individual Filter Feed Line Sizing			
No. of Filters on Line (with one out of service)	#	3	peak conditions assume backwash one filter out of service
Capacity per filter (MAX)	mgd	3.1	
	gpm	2,153	
	cfs	4.80	
Pipe Diameter - Existing	in	14	
	sq ft	1.07	Target Maximum velocity < 5 fps
	fps	4.5	ok
Individual Filter Discharge - Combined as Backwash Feed			
No. of Filters on Line (with one out of service)	#	3	choose 3 or 4 to see impacts on Velocities
Capacity per filter (MAX)	mgd	3.1	
	gpm	2,153	
	cfs	4.796	
Pipe Diameter - Existing	in	20	
	sq ft	2.18	Target Maximum velocity < 5 fps
	fps	2.2	ok
Individual Filter Discharge to Clearwell Line Sizing			
Capacity Required	mgd	3.1	A full 9.3 mgd capacity
	gpm	2,153	
	cfs	4.796	
Pipe Diameter - Existing	in	10	8-inch valve proposed for Cv control
	sq ft	0.55	@ 10-inch Friction Loss = 4.45 FT per 100 LF (Approx 10 ft run)
	fps	8.8	High
			Portion of Existing Main must be used
Backwash Pump			
No. of Pumps	#	2	Pump curve from City 3-19-12 (6300 gpm @ TDH = 28 ft)
pump capacity	gpm	9,720	new pumps for WTP Upgrade
TDH	ft	35	
	BHP	107	
drive motor	HP	125	Non-overloading full stable range
total Connected HP	HP	250	Pending Final Pump Selection during detailed design
Backwash System Design Capacity			
no of backwash cycles per day per filter (maximum)	#	1	
backwash pump capacity - existing	gpm	9,720	Existing pump curve from City 3-19-12 (6300 gpm @ TDH = 28 ft)
no of backwash cycles per day (all filters)	#	4	
backwash rate	gpm/sf	18	
Backwash Cycle Sequence / Times			
low flow (surface scour) backwash	minutes	1.0	Existing cycle per discussion with WTP Staff
high flow (regular) backwash	minutes	6.0	
simultaneous surface wash	minutes	1.5	
low flow backwash	minutes	1.0	
filter resting period	minutes	1.0	
filter to drain	minutes	30.0	see calc below for bottom drain sizing
total backwash cycle time	minutes	40.5	
Total Backwash Water Used per Cycle	gal	73,053	
Total Backwash Water Used per Day - maximum)	gal	292,210	
		3.1%	as percentage of total production
Transfer Pump			
No. of Pumps	#	2	
type of pump	-	vertical turbine	
no. of pumps in service	#	1	
	gpm	6,458	
estimated discharge head	ft	40	Pump curve from City 3-19-12 (6300 gpm @ TDH = 28 ft)
pump efficiency	%	83%	
	BHP	78.6	
drive motor	HP	100	Non-overloading full stable range
Total Connected Load	HP	200	Pending Final Pump selection during detailed design
Transfer Pump Line Sizing - Individual Discharge			

Exhibit 4-11
NM Winson WTP
Proposed Design Criteria Summary

DESCRIPTION	UNITS	PROPOSED for BP 3 WTP UPGRADE	COMMENTS
Capacity	gpm	6,458	
	cfs	14.388	
Pipe Diameter	in	24	
	sq ft	3.14	
	fps	4.6	ok
Transfer Pump Line Sizing - Combined Discharge			
Capacity	gpm	6,458	
	cfs	14.388	
Pipe Diameter	in	24	
	sq ft	3.14	
	fps	4.6	ok
Transfer + Backwash Suction Line Sizing - Combined			
Capacity	gpm	16,178	
	cfs	36.043	
Pipe Diameter	in	36	
	sq ft	7.07	
	fps	5.1	ok
Backwash Supply Line Sizing - Discharge			
Capacity	gpm	9,720	
	cfs	21.655	
Pipe Diameter - Existing	in	24	
	sq ft	3.14	
	fps	6.9	High, but
			Portion of Existing Main must be used
Individual Backwash Supply Line Sizing - Combined with Filter Drain			
Capacity	gpm	9,720	
	cfs	21.655	
backwash pump capacity - existing	in	20	
	sq ft	2.18	@ 20-inch Friction Loss = 1.7 FT per 100 LF
	fps	9.9	High, but
			Portion of Existing Main must be used
Waste Backwash Line Sizing to Holding Basins (Top)			
Capacity	gpm	9,720	
	cfs	21.655	
Pipe Diameter - Existing	in	24	Replace with upsize outside of Filter Building footprint
	sq ft	3.14	@ 24-inch Friction Loss = 0.66 FT per 100 LF
	fps	6.9	High, but
			Portion of Existing Main must be used
Drain Line Sizing to Holding Basins (Bottom)			
Capacity	gpm	1,750	estimated by gravity for V = <5 fps
	cfs	3.899	
Pipe Diameter - Existing	in	12	
	sq ft	0.79	
	fps	5.0	ok
Estimated Filter Box Drain Time	min	30.0	gravity
Surface Scour System			
no of scour cycles per day per filter (maximum)	#	1	flow is "shaved" from off-site high service distribution manifold
required flow rate	gpm	61	
required pressure	psi	50	
no of backwash cycles per day (all filters)	#	4	
Supply Line Sizing off High Service Pumps			
Capacity	gpm	61	
	cfs	0.136	
Pipe Diameter - Existing	in	6	
	sq ft	0.20	
	fps	0.7	
Individual Supply Line Sizing			
Capacity	gpm	61	
	cfs	0.136	
Pipe Diameter - Existing	in	6	
	sq ft	0.20	
	fps	0.7	
Existing 0.75 MG Storage Tank			To be replaced by new Tanks on land to North of WTP
No. of Tanks	#	-	

Exhibit 4-11
NM Winson WTP
Proposed Design Criteria Summary

DESCRIPTION	UNITS	PROPOSED for BP 3 WTP UPGRADE	COMMENTS
Diameter	ft	-	
Sidewall Height (est.)	ft	-	
Existing 1.5 MG Storage Tank			To be replaced by new Tanks on land to North of WTP
No. of Tanks	#		
Diameter	ft	-	
Sidewall Height (est.)	ft	-	
New 1.25 MG Storage Tanks			
No. of Tanks	#	2	
Diameter	ft	80.0	
Sidewall Height	ft	33.3	
High Service Pumps from Storage Tank			Craig Smith April 2006 Capacity Analysis Report (Table 1-1)
Total City Demand (approximately)	mgd	13.3	AADF
Water Purchased from MDWASD (average)	mgd	4.0	
Capacity required - average	mgd	9.30	
	gpm	6,458	
PHF/ADF Peaking factor	#	1.60	flow factors per (MC) NM Water Model 6-7-12
	gpm	10,333	
Minimum Flow factor	#	0.48	
	gpm	3,100	
No. of Pumps	#	4	proposed pumps with VFDs
pump capacity	gpm	3,444	
TDH	ft	162	70 psi
drive motor	BHP	168	assumes 83.5% eff
drive motor	HP	200	Non-overloading full stable range
No. of Pumps (Nos. 2 and 4)	#	-	
pump capacity	gpm	-	
TDH	ft	-	
drive motor	BHP	-	assumes 83.5% eff
drive motor	HP	-	
No. of Pumps (No. 6)	#	-	
pump capacity	gpm	-	
TDH	ft	-	
drive motor	BHP	-	assumes 70% eff
drive motor	HP	-	field verify
			Pump Sizing will be completed during detailed design Target is 150 HP - Likely 200 HP motor carried in
Total Installed Capacity at WTP			
minimum (1 pump)	gpm	2,067	assumed 60% turndown via VFD
	mgd	2.98	
average (2 to 3 pumps)	gpm	6,889	
	mgd	9.92	
maximum (all pumps)	gpm	13,778	
	mgd	19.84	
Total Connected Load	HP	800	
Total Number of Distribution Pumps	#	4	reduction in two total high service pumps
Total Number of Pumps Installed in new Master Pump Station	#	8	equal pumps to existing with redundant transfer and backwash
Supply Line Sizing to High Service Pumps			
Max Capacity	gpm	10,333	max based on 9.3 WTP capacity @ 1.6 PF.
	cfs	23.021	Does not include additional 4 mgd purchased by City from WASD
from storage tank	in	30	
	sq ft	4.91	
	fps	4.7	ok
Min Capacity	gpm	3,100	max based on 9.3 WTP capacity @ 0.48 PF.
	cfs	6.906	
Total Connected Load	in	30	
	sq ft	4.91	
	fps	1.4	ok
Discharge Line Sizing off High Service Pumps			
Max Capacity	gpm	10,333	max based on 9.3 WTP capacity @ 1.6 PF.
	cfs	23.021	

Exhibit 4-11
NM Winson WTP
Proposed Design Criteria Summary

DESCRIPTION	UNITS	PROPOSED for BP 3 WTP UPGRADE	COMMENTS
to Distribution System	in	24	
	sq ft	3.14	
	fps	7.3	High, but
Individual Pumps			short run at peak condition
Capacity	gpm	3,100	max based on 9.3 WTP capacity @ 0.48 PF.
	cfs	6.906	
Min Capacity	in	16	
	sq ft	1.40	
	fps	4.9	ok
Backwash Holding Basin			
Solids Production			
	ppd	18,500	H&S W-WTP Sludge Master Plan Aug 2010
	gpd @ 6%	37,600	
	mgd treated	-	
	ppd/mgd	-	
	gpd/mgd	-	
No of Basins	#	2	
Basin Dimensions			
length	ft	62	
width	ft	31	
depth	ft	6.0	
area	sq ft	1,922	
volume	cu ft	23,064	
	gal	172,542	
Waste Lime Sludge Pump Station			
Lime Sludge Wasting Cycle	gph	1,567	
New Pump Station Volume	gal	12,685	
diameter	ft	12	per waste cycle (5 mins per hour)
depth	ft	15	reference Alternative 2 Sanitary Sewer Discharge in 44238-003 TM
volume	cuft	1,696	
	gal	12,685	
TDH	ft	53	2000 LF of 4-inch Pipe (1.78 ft / 100ft) SF = 1.5
Motor Size	BHP	7.0	assume 30% eff
	HP	10	
storage volume	hrs	8.1	
pump rate to MDWASD	gpm	156.7	assumed per discussion with City and Pump Curve
	cfs	0.3	
	TDH		trailer mounted diesel 80 HP diesel pump
Force Main Diameter to Pump Station A	inch	4.0	
	sq ft	0.087	
velocity	fps	4.00	
length of line	ft	2,000	
friction loss	ft/100 ft	2.70	
No. of Pumps	#	2	
pump type	-	recessed impeller	
pump cycle	mins	10	
	hrs	0.2	
TDH	ft	64.8	
drive motor	BHP	8.5	
	HP	15.0	
total connected load	HP	30.0	
Decant Pumps			
Backwash Pump Capacity	gpm	9,720	
Total backwash volume per day	gal	251,410	
Basin Volume	gal	172,542	
No. of pumps	#	2	
capacity	gpm	210	
	cfs	0.47	
TDH	ft	30.0	
drive motor	BHP	5.3	
drive motor	HP	10.0	
total connected load	HP	20.0	
Return Water Line diameter	inches	4.0	
area	sq ft	0.09	
velocity	fps	5.4	

Exhibit 4-11
NM Winson WTP
Proposed Design Criteria Summary

DESCRIPTION	UNITS	PROPOSED for BP 3 WTP UPGRADE	COMMENTS
Chemical Handling Facility			
Chemical Feed Pumps - Fluoride			
Chemical Used	-	23% Fluorosilic Acid	SG = 1.2 @ 20 degrees C
Density of Solution	lbs/gal	10.01	
Chemical delivered per gallon	lbs	2.30	
Dosage	mg/l	0.5	
WTP Permitted Capacity	mgd	9.3	
Chemical Usage per Day	ppd	38.8	
	gpd	16.8	
No. of Pumps	#	2	
type of pump	-	diaphragm metering	micrometer stroke control
Capacity	gph	1.5	0.7
drive motor	HP	0.25	
Bulk Storage Tank - Fluoride			
no. of tanks	-	1	
material of construction	-	FRP	
bulk storage required	days	30	
volume required	gals	505	
proposed tank capacity	gals	750	
proposed tank dimensions			
diameter	ft	5.0	Belding Tank Technologies
sidewall height	ft	5.0	Top / Bottom Dished. Total height with legs =8.2 feet
capacity	gals	780	
Day Tank - Fluoride			
no. of tanks	-	1	
material of construction	-	FRP	
bulk storage required	days	1	
volume required	gals	17	
proposed tank capacity	gals	75	
proposed tank dimensions			
diameter	ft	3.0	Belding Tank Technologies
sidewall height	ft	1.5	Top / Bottom Dished. Total height with legs =4.0 feet
capacity	gals	75	
Chemical Transfer Pumps - Fluoride			
No. of Pumps	#	2	
type of pump	-	magnetic drive	constant speed
Transfer time	min	7.5	
Capacity	gpm	10.0	
drive motor	HP	0.125	
Chemical Feed Pumps - Ammonia			
Chemical Used	-	29.4% Ammonium Hydroxide	SG = 0.8974 @ 20 degrees C
Density of Solution	lbs/gal	7.48	
Chemical delivered per gallon	lbs/gal	2.20	
Dosage	mg/l	0.75	
WTP Permitted Capacity	mgd	9.3	
Chemical Usage per Day	ppd	58.2	
	gpd	26.4	
No. of Pumps	#	2	
type of pump	-	diaphragm metering	micrometer stroke control
Capacity	gph	2.0	1.1
drive motor	HP	0.25	
Bulk Storage Tank - Ammonia			
no. of tanks	-	1	
material of construction	-	Carbon Steel	
bulk storage required	days	30	
volume required	gals	793	
proposed tank capacity	gals	1,000	
proposed tank dimensions			
diameter	ft	6.0	Belding Tank Technologies
sidewall height	ft	4.5	Top / Bottom Dished. Total height with legs =8 feet
Capacity	gals	1,066	
Chemical Feed Pumps - Anti-Coagulant			
Chemical Used	-	CARUS - Poly Pro 4941-275	
Density of Solution	lbs/gal	8.70	
Chemical delivered per gallon	lbs	8.70	
Dosage	mg/l	250	
WTP Waste Lime Sludge Production	gpd	37,600	
Chemical Usage per Day	ppd	78	

Exhibit 4-11
NM Winson WTP
Proposed Design Criteria Summary

DESCRIPTION	UNITS	PROPOSED for BP 3 WTP UPGRADE	COMMENTS
	gpd	9.0	
No. of Pumps	#	2	
Capacity	gph	1.0	0.375
drive motor	HP	0.25	
Bulk Storage Tank - Anti-Coagulant			
no. of tanks	-	1	
material of construction	-	Tote (HDPE)	
bulk storage required	days	30	
volume required	gals	270	
proposed tank capacity	gals	275	
proposed tank dimensions			Tote: 48"x40"x48"
diameter	ft	-	
sidewall height	ft	-	
Chemical Feed Pumps - Coagulant Aid			
Chemical Used	-	WhisperFloc	17 lbs of whisper floc per 300 gal of water
Density of Solution	lbs/gal	8.34	
Chemical delivered per gallon	lbs / gal	0.057	
Dosage	mg/l	0.26	
WTP Permitted Capacity	mgd	9.3	
Chemical Usage per Day	ppd	20.2	
	gpd	355.9	
No. of Pumps	#	2	
Capacity	gph	20.0	14.8
drive motor	HP	0.25	
Bulk Storage Tank - Coagulant Aid			
Hypochlorite Facility			
Chemical Feed Pumps - Hypochlorite - Pre Chlorination			
Chemical Used	-	12.5% NaOCl	
Density of Solution	lbs/gal	9.70	
Chemical delivered per gallon	lbs	1.04	
Dosage	mg/l	3.50	Pre and Post Chlorination - see Chem Usage Worksheet
WTP Permitted Capacity	mgd	9.3	
Chemical Usage per Day	ppd	271.5	
	gpd	261.6	
No. of Pumps	#	2	
Capacity	gph	15.0	10.9
drive motor	HP	0.25	
Chemical Feed Pumps - Hypochlorite - Post Chlorination			
Chemical Used	-	12.5% NaOCl	
Density of Solution	lbs/gal	9.70	
Chemical delivered per gallon	lbs	1.04	
Dosage	mg/l	4.00	Pre and Post Chlorination - see Chem Usage Worksheet
WTP Permitted Capacity	mgd	9.3	
Chemical Usage per Day	ppd	310.2	
	gpd	298.9	
No. of Pumps	#	2	
Capacity	gph	15.0	12.5
drive motor	HP	0.25	
Bulk Storage Tank - Hypochlorite			
no. of tanks	-	2	1+1 Service
material of construction	-	FRP	
Capacity	gals		
bulk storage required	days	15	assume a 15 day reorder cycle to avoid excessive degradation
volume required	gals	8,407	
proposed tank capacity	gals	8,761	
proposed tank dimensions			Current tanks are 2000 gal (2)
diameter	ft	10.0	
sidewall height	ft	15.0	with dome 16.7
Capacity	gals		

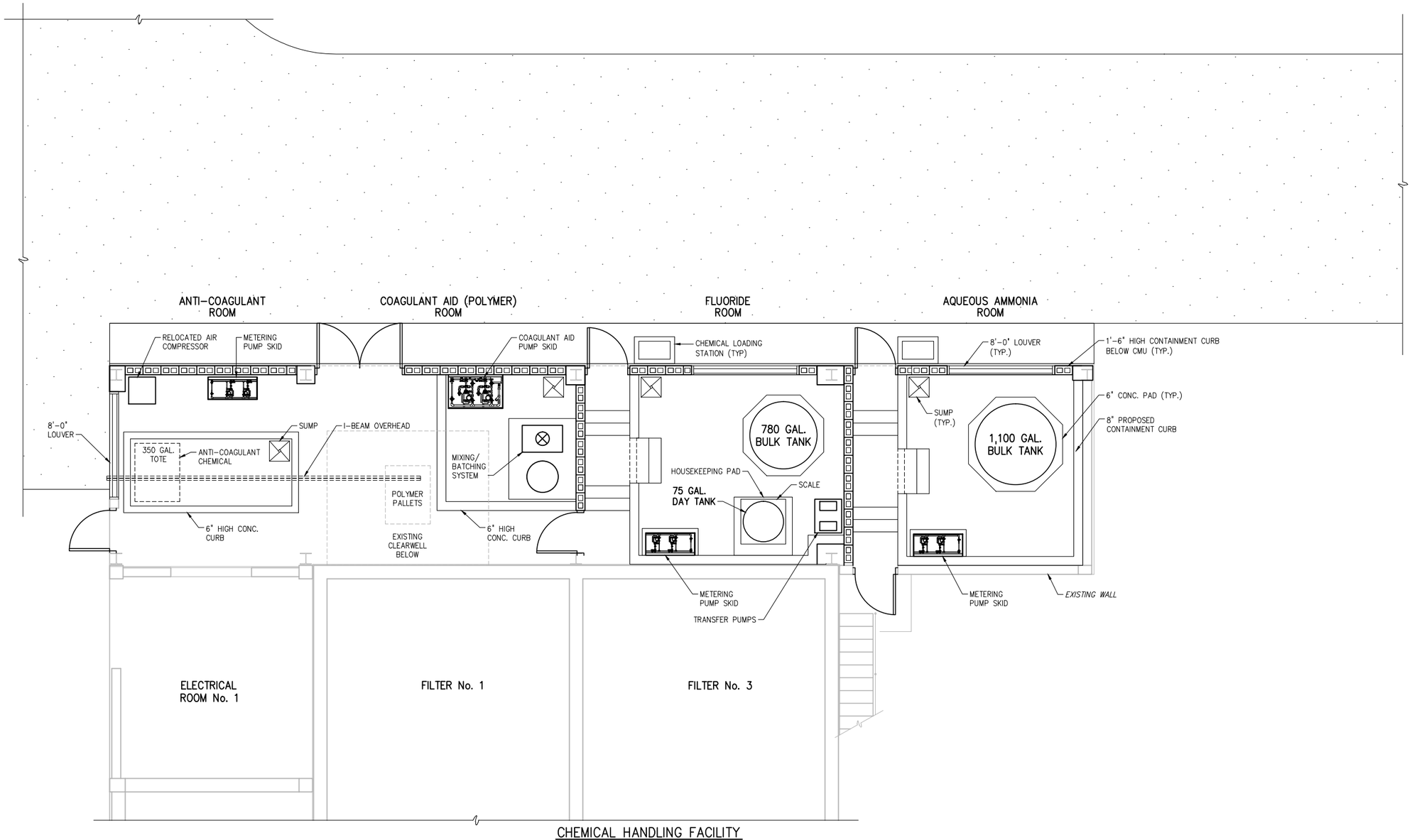

CHEMICAL HANDLING FACILITY
PROPOSED PLAN

1/4"=1'-0"

LEGEND:

EXISTING

PROPOSED

1/4"=1'-0"

1 0 1 2 3 7'

HAZEN AND SAWYER
Environmental Engineers & Scientists

WINSON WATER TREATMENT PLANT
BID PACKAGE 3: WTP REHABILITATION

CHEMICAL HANDLING FACILITY

EXHIBIT 4-12

PLOT DATE: 2/5/2013 3:21 PM BY: TBOCAS

XREFs= ..\Base-BP3\S-BP1-Filters-Plan-Bottom-X,.\Base\M-BP3-ChemHand-Plan,.\Base\S-BP3-ChemHand-Plan

File = C:\Users\tbocas\AppData\Roaming\projectpoint-2011\Work\projectpoint.buzzsaw.com\hazenandsawyer\north miami wtp improvements (44238-004)\Drawings\bid package 3 - [illegible] 2/5/2013 3:19 PM

Exhibit 4-13
City of North Miami
Winson WTP Improvements

North Miami - Winson WTP Improvements

Preliminary Disinfection Calculation:

Existing operating conditions with a peak flow of 10,333 gpm (assumed for all process segments as a conservative approach)
Log Inactivation/Removal Required: 4.0 log
Conventional Filtration : 2.0 log (lime softening)
Chemical Disinfection: 2.0 log (free chlorine)

City is currently achieving 4.0 log with free chlorine disinfection

Process segments where disinfection occurs:

1. Clearwell
2. Transfer line between clearwell and 0.75 MG finished water storage tank
3. 0.75 MG finished water storage tank

Detention Volume, Clearwell + Transfer Line:

Clearwell						
Dimensions, Ft:	Length:	78	Width:	38	Height:	8
Volume, Cu. Ft.:	23,712		Volume, gal:		177,366	
Clearwell Sump						
Dimensions, Ft:	Length:	12	Width:	10	Height:	8
Volume, Cu. Ft.:	960		Volume, gal:		7,181	
Total Clearwell Volume, gal:	184,547					
Clearwell Minimum Level, Ft:	2					
Clearwell Detention Volume, gal: (Clearwell detention volume + 15% of remaining clearwell volume)	66,898					
Transfer Line						
Dimensions, Ft:	Length:	60	Diameter:	2		
Transfer Line Detention Volume (gal): (Pipe flowing full)	1,410					

Exhibit 4-13
City of North Miami
Winson WTP Improvements

Detention Time, Clearwell + Transfer Line::		
WTP Peak Flow, gpm:	10,333	
(Proposed WTP peak flow, Avg day (9.3 mgd) x 1.6 (PF))		
Clearwell Theoretical Detention Time (TDT), min:		6.47
Baffling Factor (BF):		0.30
Adjusted Detention Time (T), min:		1.94
(TDT x BF)		
Transfer Line Theoretical Detention Time (TDT), min:		0.14
Baffling Factor (BF):		1
Adjusted Detention Time (T), min:		0.14
(TDT x BF)		
Total Disinfection Contact Time (T), min:		2.08
(Clearwell + Transfer Line)		

Contact Time (CT), Clearwell + Transfer Line:	
CT = CxT	
Free Chlorine Concentration (C) , mg/L:	0.70
(Assumed minimum value of free chlorine at sampling location based on WTP MORs and CT reports)	
CT Calculated, Clearwell + Transfer Line, min- mg/L:	1.46

Contact Time (CT) Required for Disinfection, min-mg/L:	3.30
pH levels at WTP, 7.4-9.1, from MORs	
Water temperature - 18.5ºC, from MORs	
For pH values, 6-9, 4-log inactivation of viruses with free chlorine	
From table 2, 62-555.900(3)	
18ºC - 3.4 min-mg/L	
19ºC - 3.2 min-mg/L	
18.5ºC - 3.3 min-mg/L	
*** CT calculated for clearwell + transfer line < CT required for disinfection.**	
Thus, additional CT is needed at 0.75 MG storage tank	
Additional CT Needed for Disinfection, min-mg/L:	1.84
Additional Detention Time (T) Needed, min:	2.64
Based on the minimum value of free chlorine at sampling location (above)	

Exhibit 4-13
City of North Miami
Winson WTP Improvements

0.75 MG Storage Tank				
Dimensions, Ft:	Height:	20	Diameter:	80
0.75 MG Storage Tank Area, SF:		5,027		
WTP Peak Flow, gpm:		10,333		
Baffling Factor (BF):		0.30		
Assumed Detention Time (T), min:		3.0		
0.75 MG Storage Tank Theoretical Detention Time (TDT), min:		10		
T = TDT x BF				
Tank Volume Needed for Detention, gal:		103,330		
(at WTP peak flow)				
Tank Volume Needed for Detention, Cu. Ft.:		13,814		
(at WTP peak flow)				
Minimum 0.75 MG Storage Tank Level Needed to Achieve CT, ft:		**2.75**		
Minimum 0.75 MG Storage Tank Level Permitted for Operation is 8 ft.				

TECH MEMO 5 – PROPOSED ADMINISTRATION BUILDING

HAZEN AND SAWYER
Environmental Engineers & Scientists

Hazen and Sawyer, P.C.
4000 Hollywood Boulevard
Seventh Floor, North Tower
Hollywood, Florida 33021
(954) 997-0066
Fax: (954) 987-2949

Technical Memorandum No. 5 – BODR
City of North Miami Winson WTP
Proposed Administration Building

To: Distribution

From: Hazen and Sawyer, P.C.

Date: November 2012

Preamble

A total of nine Technical Memoranda (TM) were developed to comprise the Basis of Design Report (BODR) for the Winson Water Treatment Plant BP 3 WTP Rehabilitation Project. However, on October 24, 2012 the City authorized Hazen and Sawyer to proceed with revisions to Technical Memoranda to include newly acquired City property located adjacent to the northeast perimeter of the Winson WTP into the BODR. This direction necessitated the relocation of proposed Administration Building from the northwest to the southwest corner of the WTP site, and that the proposed 2.5 MG Water Storage Tank, in the southwest corner of the site was replaced with two 1.25 MG Storage Tanks to be located on the new City property. In addition, the City also requested that the Administration Building conceptual floor plan be revised to further increase the size of the Emergency Operations Center (EOC), as well as provide a dedicated EOC access to the planned Observation Deck. These requests impacted six of the eight TMs, which were either nearly complete or already accepted by the City, as well as required the development of a new Bid Package 4 to address the construction of the two 1.25 MG water storage tanks and appurtenant improvements on the City acquired land.

As a result, the following TMs will be revised, with original versions of the TMs included as Appendicies to the Basis of Design Report.

- TM 2 – On site Raw Water System Improvements: Revise to reflect the new Administration Building and Storage Tank location and their impacts on Well No. 2.
- TM 4 – Proposed Process Improvements – Revise to address changes to noted site layout as well as process impacts required for operation of the WTP with only the existing 0.75 MG Storage Tank until the two new 1.25 MG Storage Tanks are constructed on the newly purchased land.
- TM 5 – Proposed Administration Bldg – Revise to reflect City request for a larger EOC with dedicated access to the observation deck. Also requires site layout and additional parking revisions
- TM 6 – I/C System – Revise to address changes to noted site layout as well as impacts to proposed PLC locations.

- TM 7 – Electrical Improvements – Revise to address changes to noted site layout as well as impacts due to new location of electrical room on generator ductbank and site feed ductbanks.
- TM 8 – Site Improvements – Revise to address changes to noted site layout as well as impacts to previously proposed stormwater management plan

Note that this TM 5 represents a REVISION to the approved TM 5 - PRE-FINAL version dated September 18, 2012.

1.0 Background and Purpose

The City of North Miami owns and operates the Winson Water Treatment Plant (WTP), a conventional lime softening facility with a permitted capacity of 9.3 mgd. The WTP treats raw water from the Biscayne Aquifer and serves areas within the City limits as well as the Village of Biscayne Park, portions of Golden Glades, Westview, Pinewood, and surrounding areas of unincorporated Miami-Dade County. Potable water is supplied from the Winson Water Treatment Plant (WTP) and interconnects with the Miami-Dade County Water and Sewer Department (MDWASD), providing approximately 8.5 mgd AADF and 4.5 mgd AADF to users respectively. The WTP was constructed in the early 1960s and the current Bid Package 3: WTP Rehabilitation Project (BP 3) proposed to rehabilitate processes throughout the facility while maintaining the existing treatment capacity fixed at 9.3 mgd.

The WTP existing control room housed on the top floor of the filter facility no longer meets City needs. To this end, a new Administration Building will be constructed as a part of BP 3. The purpose of this technical memorandum is to establish floor space allocations and general layout requirements for the first and second floor levels of the proposed Administration Building.

Based on discussions with City Public Works staff, specific uses for the lower level of the proposed building will include an Emergency Operations Center (EOC) and Training Room, janitorial and storage areas, men's and women's lockers, mechanical room for HVAC equipment, an elevator machine room, lobby and entry vestibule, and the new Electrical Room to house MCC and Switchgear for all rehabilitated WTP facilities. The upper level will house a new Plant Control Room, a laboratory, operation staff offices, break room facilities, restrooms and additional storage areas. In addition, the Plant Control Room will also have access to an Observation Deck, located atop the single story Electrical Room. The Observation deck will also have access from the EOC on the first floor through a dedicated stairway.

It is important to note that the WTP is located in Zone X of the Federal Emergency Management Agency (FEMA) Flood Maps and is outside the 100-year flood elevation. Therefore, during the detailed design phase, the appropriate minimum finished floor elevation will be defined by executing a local glass wall analysis of the WTP site (i.e. 100-year, 3-day storm event with zero discharge). However, as the facility is above the 100 year floor elevation, the location of the EOC on the first floor of the proposed building allows for the location of the Operations Control Room and Offices on the second floor, providing a better monitoring location for the day to day facility status.

2.0 Proposed Building Construction

Hazen and Sawyer typically designs structures at publicly owned treatment works located in Miami-Dade to meet one of the three "Protection Levels" as defined in Table 5-1 below. The design wind speeds used for design of structures within each level depends on the Risk Category established by the Florida Building Code and by FEMA guidelines for Safe Rooms.

Table 5-1
"Protection Level" Design Categories For Utility Applications

Protection Level	Design Wind Speed	Description
A	175 MPH	Non-Essential Buildings
B	186 MPH	Process Buildings
C	200 MPH	Safe Room

The Level A design category is intended to meet Florida Building Code (FBC) requirements of structures classified in Risk Category II. These structures are unmanned facilities, non-essential structures that do not represent a substantial hazard to human life in the event of failure and/or are not designated as essential. This type of structure, as contemplated here-in, would consist of a standard pre-engineered-type metal building with a rigid, structural steel frame with steel panel walls, factory applied paint and a galvanized steel panel roofing system or a tilt-up concrete panel structure with metal joist and steel deck roofing system. Either system is installed on a reinforced concrete slab. All building envelope components, including doors, windows and skylights, would be designed to meet basic FBC requirements for the wind speed noted in Table 5-1. Construction costs for this type of structure including interior partitions are approximately $150 per square foot. It is important to note that these types of structural systems do not have redundant wind resisting systems; therefore, there is an increased risk of failure at wind speeds in excess of the minimum FBC-specified 175 mph requirements. In addition, construction economy for these types of installations is achieved by using modular dimensions; therefore, facility equipment layouts may require adjustment to fit standard available framing systems. Custom designs will increase building costs from the noted $150 per square foot value.

The Level B design category is intended to meet FBC requirements of structures classified in Risk Categories III and IV. These structures are typically occupied except during a hurri-cane, and are used when the structure is required to prevent a substantial hazard to human life and/or designated as essential to remain functional both during and after storm events. Structures designed under this category are also occasionally used as emergency shelters but are not as resistant to impact from debris during a hurricane. This construction ap-proach consists of reinforced CMU structure or reinforced concrete frames with reinforced CMU infill walls installed on a reinforced concrete slab. The roof consists of precast con-crete elements such as hollowcore planks or double tees. Construction costs for these types of structures with wind resistant doors, windows and skylights typically cost approx-imately $200 per square foot. This construction approach is suitable for winds of up to 186 mph and has been utilized to protect key process areas at other south Florida utility plants. In addition, the CMU considered under this design approach offer more architectural treat-

ment flexibility than the standard, factory-painted, prefabricated metal panels installed in Level A designed structures. A majority of the existing Pompano Beach WTP buildings were constructed in this manner.

The Level C design category exceeds minimum FBC standards and meets recommended design criteria for Safe Rooms as defined by FEMA. Unlike Level B protection that was established to minimize property damage and improve building performance, Level C protection is intended to provide a near-absolute protection of occupants against wind forces and impact of wind-borne debris. These structures consist of a concrete-framed structure with stucco-finished fully grouted CMU walls or cast-in-place concrete walls and a cast-in-place concrete roofing system, designed for up to 200 mph wind speeds. These types of structures offer improved wind resistance, significantly exceeding FBC requirements and cost approximately $250 per square foot. This construction approach has been utilized in the design of essential occupied buildings at various south Florida utility facilities.

A Level C design for the new Administration Building will be implemented as agreed with the City.

LEED Certification: The Administration Building must also comply with Section 5-805 of the North Miami Code of Ordinances entitled “Sustainable Building Program”. This Code requires that a “Silver” designation (LEED) or higher be complied with for new buildings. Achieving full “Silver” designation encompasses requirements that escalate the cost of the Building. Therefore, it was proposed that design proceed with the general intent of complying with “Basic” LEED Certification and requesting that the City’s Design Review Committee exempt the building due to “special” circumstances, as allowed for under Section 5-805, Article I of the Code. However, the City subsequently advised that a “Silver” designation would remain the target goal, as the Design Review Committee would not issue an opinion on conceptual plans.

For the purposes of estimating budget level costs, it is anticipated that “Silver” LEED compliance adds approximately 30% to the square foot cost of the building ($325 per square foot for the purposes of this TM). Budget level costs are +30% / -15% as suggested by the American Association of Cost Engineers.

Additional Construction Considerations: The proposed building is classified as “Business” occupancy. The construction type will be Type IIB with a concrete structural frame, concrete floor and roof slabs and masonry infill walls. Interior walls will be furred out with metal furring, insulation as required, and gypsum drywall. The ceiling will include mineral fiber acoustical ceiling tiles and a metal “T” suspension system. Wall surfaces will be painted and the floor systems shall be vinyl tile or carpet.

Energy Code Compliance: The current energy code in Florida requires up to an R-30 for walls. As it may be impractical to install the requisite amount of insulation to achieve R-30 within the interior walls of the planned building, the exterior of the structure will include a high impact exterior insulation finish system (EIFS) creating a stucco appearance. This EIFS will allow for continuous insulation on the exterior of the building to supplement interior insulation and meet code requirements.

Fire Suppression System: A fire suppression system is not required by the 2010 Florida Building Code (Chapter 9) or 2010 Florida Fire Prevention Code. It is to be noted that the City of North Miami adopted the fire code used by Miami-Dade County which is the 2010 Florida Fire Prevention Code.

3.0 Building Layout

Attached Exhibit 5-1 provides conceptual layouts of the first and second floors of the proposed Administration Building. The building has an occupancy classification of "Business" per the Florida Building Code – Building, Section 304.1. Occupant load is calculated per Table 1004.1.1 of the Florida Building Code – Building depending upon the function of each space within the building. The proposed building has an approximate gross area of 7,533 square feet (including the observation deck). Table 5.2 shows occupant loads for each area of the building.

Table 5-2
Occupant Load
Proposed Administration Building

Area & Classification	Area (Net)	Function	SF per Occupant	Occupants
First Floor				
Electrical Room	408	Industrial	100	5
Mech Room	136	Mech Equipment	300	1
Conference / EOC	752	Assembly w/o Fixed Seats	15	51
Office, Storage, Stairs, Elevator, Reception	1713	Business	100	18
Locker Rooms	712	Locker	50	15
Machine Room	45	Mech Equipment	300	1
			Subtotal	91
Second Floor				
All Areas	3166	Business	100	32
			Totals	**123**

The first floor has a total approximate area of 3,766 sf with a total of 91 occupants including the occupants identified below. The first floor will house the following:

- Electrical Room - Houses Motor Control Center (MCC) and Switchgear equipment for all WTP facilities. Reference Technical Memorandum No. 7 for further details regarding the proposed electrical and distribution system.
- Men's Locker Room – Furnished with requisite shower, toilets, urinal, lockers and handicap accessible to meet applicable Americans with Disabilities Act (ADA) requirements. With a net area of approximately 347 square feet, this space can house up to seven occupants at a maximum density of 50 square feet per occupant, as de-

fined in the Florida Building Code - Building Table 1004.1.1 Locker Rooms. Based on a male occupant load of 45 for the first floor (half of the total occupancy), a total of two (2) water closets are required per the Florida Building Code – Plumbing Table 403.1 (1 per 25 for the first 50 and 1 per 50 for the remainder exceeding 50). Section 419 of the Florida Building Code – Plumbing allows substitution of up to 50% of the water closets for urinals. A total of 2 water closets and 1 urinal are provided in the Men's Locker Room.

- Women's Locker Room - Furnished with requisite shower, toilets, lockers and handicap accessible to meet applicable ADA requirements. With an area of approximately 353 square feet, this space can house up to eight occupants at a maximum density of 50 square feet per occupant, as defined in the Florida Building Code – Building Table 1004.1.1 Locker Rooms. Based on a female occupant load of 46 for the first floor (half of the total occupancy), a total of two (2) water closets are required per the Florida Building Code – Plumbing Table 403.1 (1 per 25 for the first 50 and 1 per 50 for the remainder exceeding 50). A total of 2 water closets are provided in the Women's Locker Room.
- Emergency Operation Center / Training Room - With a total area of approximately 752 square feet, this space can house up to 51 occupants at a density of 15 square feet per occupant, as defined in the Florida Building Code - Building Table 1004.1.1 Assembly Areas without fixed seats, un-concentrated with tables and chairs. This area will be equipped with a minimum of five telephone lines and computer Local Area Network connections to facilitate emergency operations. The design also includes a dedicated stairwell for dedicated EOC access to the proposed Observation Deck.
- EOC Office – Provides an additional 270 sq ft of isolated space for EOC and/or Storage functions.
- Secured storage.
- Elevator mechanical room.
- Janitorial closet.
- Reception area.
- HVAC / Mechanical Room with exterior access to facilitate maintenance.

The second floor has a total net area of 3166 sf (not including the observation deck which is not considered for occupant loads) with a total of 32 occupants and will house the following:

- The Plant Control Room will house the new distributed control system console and have windows along the south east and southwest perimeter to allow observation of the WTP.
- A historian (record keeping and report generating computer) will be maintained in a separate location across from the Plant Control Room.
- One Chief Operator and two General Operations and Staff offices are also provided.

- Separate Men's and Women's restroom facilities. A total of 1 water closet is provided for each restroom based on Table 403.1 of the Florida Building Code – Plumbing and dividing the total floor occupant load in half to determine the requirements for each.
- Break Room Area. The City has requested that this area be upgraded to a full Kitchen Facility. However, the Building Department has advised that inclusion of a full kitchen with cook-top range on the second floor of the Administration Building would require the need for specialty ventilation and a fire suppression system. To this end, the Break Room will be provided with built-in cabinets, microwave, sink and refrigerator.
- Laboratory and Laboratory Office with access to outdoor Observation Deck - constructed atop the single story Electrical Room.
- Multiple egress stairwells to meet applicable fire code requirements.

All Building interior finishes will be coordinated with Public Works administrative staff. In addition, the design effort will include a tabulation of recommended furnishings for the new Administration Building. The City will use this tabulation to procure furnishings directly and thus realize benefit of their sales tax exemption status.

4.0 Parking Requirements

The Administration Building will have a net area of 6,932 square feet. Section 5-1402 of the City of North Miami Code of Ordinances requires that buildings for government use be provided with one (1) parking space for every 300 square feet of gross floor area. Therefore it is estimated that building will require a total of twenty four (24) parking spaces, with dimensions per Section 5-1401 of the Code of Ordinances. In addition, Section 11-4.1.2 (5) of the Florida Building Code requires that one (1) handicap accessible space be provided for parking facilities with 1 to 25 parking spaces, sized 12-ft in width by 20-ft in length per Section 7-101 of the Code of Ordinances. The traffic pattern for the new Administration Building parking lot is addressed in Tech Memo No. 8 entitled "General Site and Facility Improvements".

5.0 Finished Floor Elevation

As the WTP site is located in FEMA Zone X (above the 100-year flood elevation), the minimum finished floor elevation of the proposed new Administration Building will be established during detailed design through a "glass wall analysis" (100-year, 3-day storm event with zero discharge). Note that Section 8.5-52 of the North Miami Code of Ordinances does not apply as the WTP is located outside of any flood hazard areas.

6.0 Site Layout

The proposed Administration Building will be constructed on the southwest corner of the WTP site, in an area to be made available by the demolition of the existing 1.5 MG Storage Tank. Attached Exhibit 5-2 illustrates the general location of the proposed Administration Building and parking layout. Stormwater impacts of the new structure are addressed in Tech Memo No. 8 entitled "General Site and Facility Improvements"

5.0 Preliminary Opinion of Probable Project Cost

The estimated construction cost of the proposed Administration Building, excluding related site improvements is $2,253,000, based on a budget level estimate of $325 per square foot for “Silver” level LEED certification and a net square footage of 6,932 square feet.

Attachments

Distribution:
A. Ghany
W. Pierre-Louis
P. Vida
B. Vidal
T. Carney
JP Silva

c: G. Brown
File 44238-004 / 1.2

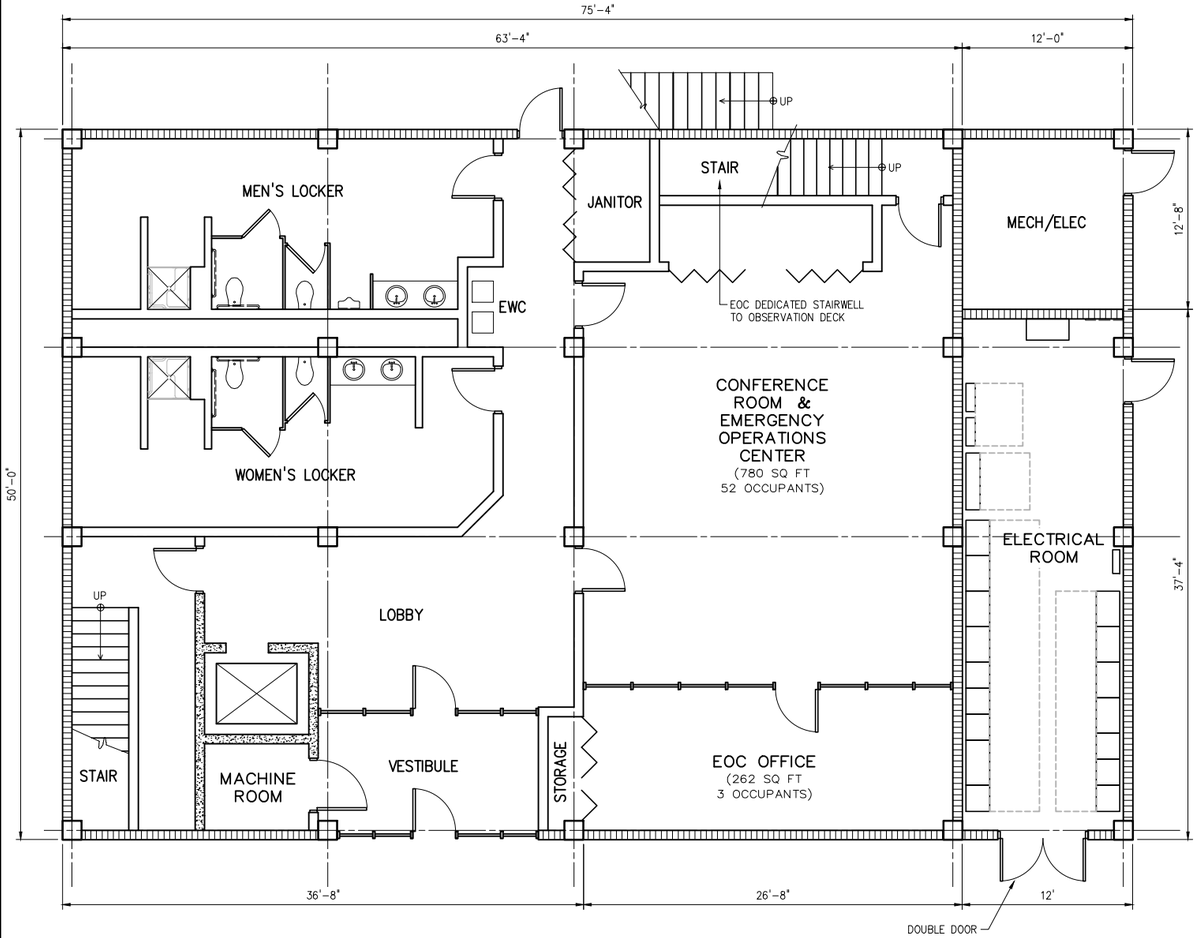

FIRST FLOOR PLAN

3/16"=1'-0"

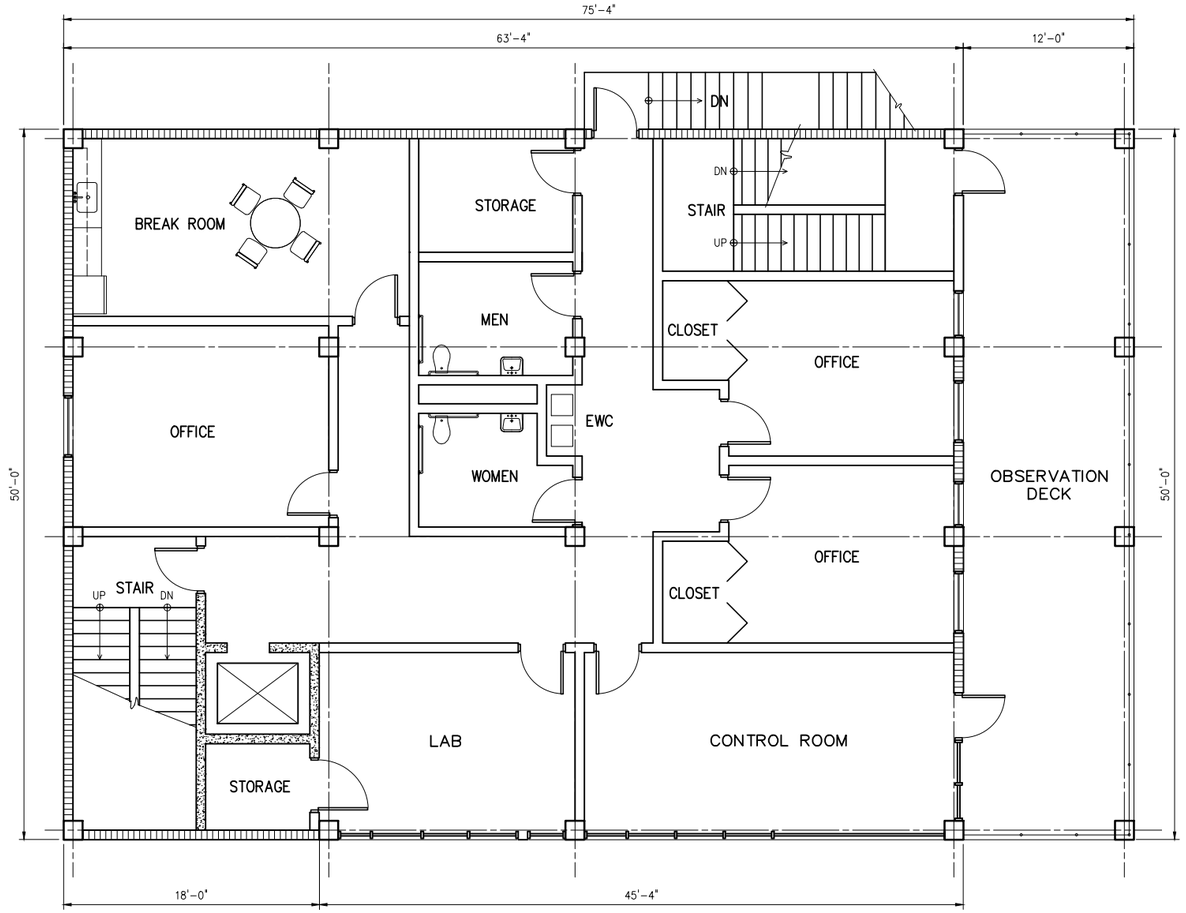

SECOND FLOOR PLAN

3/16"=1'-0"

3/16"=1'-0" 6 4 2 0 5'

HAZEN AND SAWYER
Environmental Engineers & Scientists

WINSON WATER TREATMENT PLANT
BID PACKAGE 3: WTP REHABILITATION

PROPOSED ADMINISTRATION
FLOOR PLANS
EXHIBIT 5-1

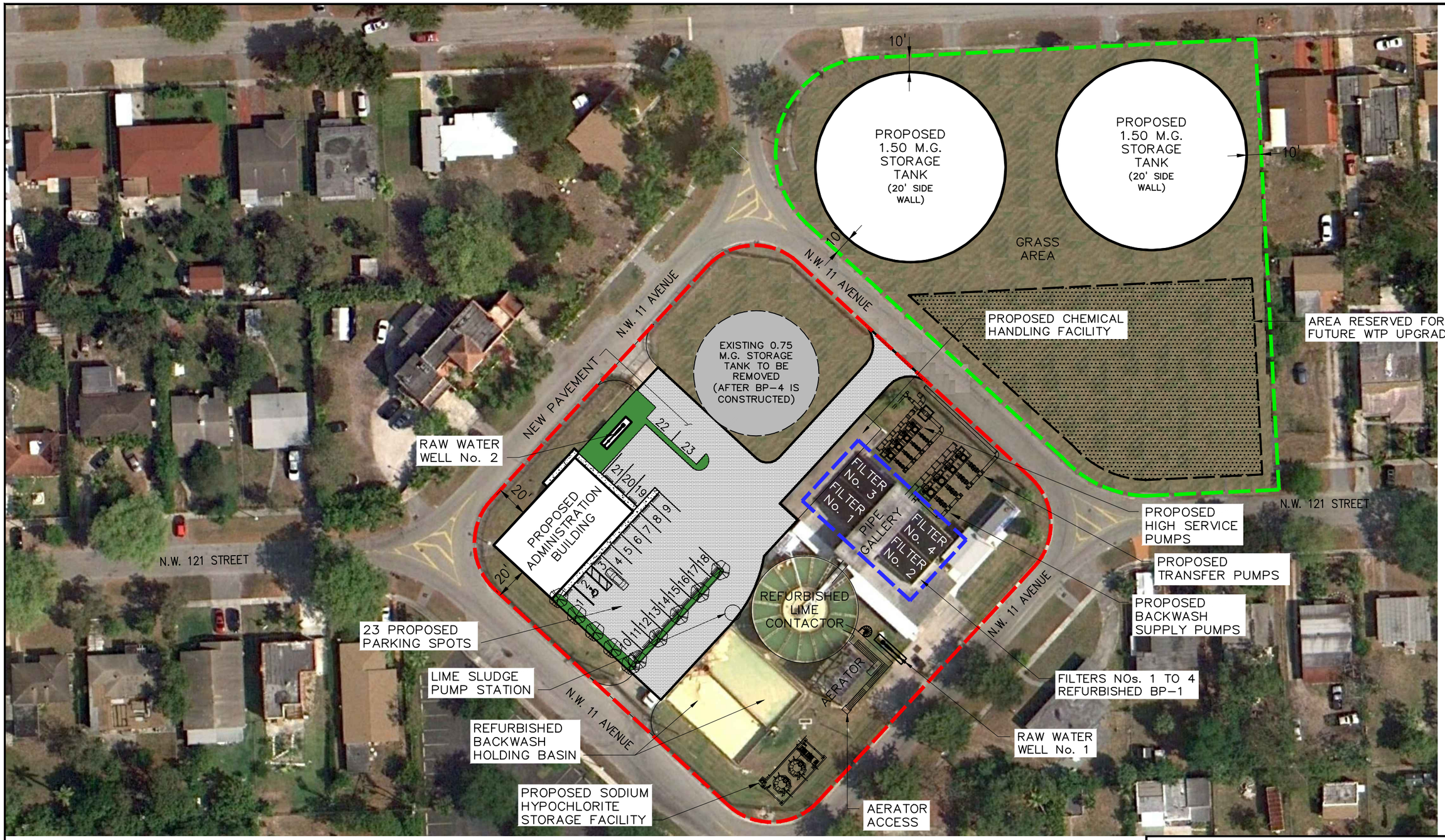

LEGEND:

- BP-1: FILTER REHABILITATION PROJECT.
- BP-3: WTP REHABILITATION PROJECT (INCLUDES BP-2: ON-SITE RAW WATER SYSTEM IMPROVEMENTS).
- BP-4: WATERSTORAGE TANKS PROJECT.

HAZEN AND SAWYER
Environmental Engineers & Scientists

1"=60'-0"

60 30 0 60'

WINSON WATER TREATMENT PLANT
BID PACKAGE 3: WTP REHABILITATION

PROPOSED SITE LAYOUT

EXHIBIT 5-2

PLOT DATE: 12/3/2012 2:32 PM BY: TBOCAS

XREFS=

File = C:\Users\tbocas\AppData\Roaming\projectpoint-2011\Work\projectpoint.buzzsaw.com\hazenandsawyer\north miami wtp improvements (44238-004)\Drawings\bid package 3 - *