GENERAL ELECTRICAL NOTES

1. ALL WORK SHALL BE DONE IN ACCORDANCE WITH THE NATIONAL ELECTRICAL CODE (N.E.C. 2008) AND GOVERNING MUNICIPAL, STATE AND LOCAL CODES. ALL MATERIAL SHALL BE NEW AND SHALL BEAR THE U.L. LABEL WHERE APPLICABLE.
2. ALL WORK SHALL BE PERFORMED BY A LICENSED ELECTRICAL CONTRACTOR IN A FIRST CLASS WORKMANLIKE MANNER. THE COMPLETED SYSTEM SHALL BE FULLY OPERATIVE AND ACCEPTED BY THE OWNER.
3. IT IS NOT THE INTENT OF THESE PLANS TO SHOW EVERY MINOR DETAIL OF CONSTRUCTION. THE CONTRACTOR IS EXPECTED TO FURNISH AND INSTALL ALL ITEMS FOR A COMPLETE ELECTRICAL SYSTEM AND PROVIDE ALL REQUIREMENTS NECESSARY FOR EQUIPMENT TO BE PLACED IN PROPER WORKING ORDER.
4. CONTRACTOR SHALL MAKE ALL NECESSARY CUTTING AND DO ALL THE REPATCHING AS NECESSARY FOR THE PROPER EXECUTION OF THIS WORK.
5. AFTER COMPLETION OF THE INSTALLATION, THE SYSTEM SHALL TEST FREE FROM SHORT CIRCUITS AND GROUNDS.
6. WHERE ELECTRICAL CONDUCTORS ARE INSTALLED IN CONDUIT, THE CONDUIT SHALL COMPLY WITH THE N.E.C. REQUIREMENTS.
7. ALL CONDUCTORS SHALL BE COPPER. NO CONDUCTOR SHALL BE SMALLER THAN #12 AWG AND SHALL BE RATED FOR 600VOLTS THWN OR THHN INSULATION. INSTALL A GROUNDING CONDUCTOR WITH ALL CIRCUITS, UNLESS NOTED OTHERWISE, SIZED PER N.E.C. 250-122.
8. VERIFY BREAKER AND CORRESPONDING WIRE SIZES FOR ALL ELECTRICAL EQUIPMENT. DO NOT ORDER MATERIAL BEFORE VERIFYING BREAKER & WIRE SIZE. REPORT ANY DISCREPANCY IMMEDIATELY TO THE ENGINEER OF RECORD.
9. SAFETY SWITCHES SHALL BE SQUARE 'D', GENERAL ELECTRIC, OR WESTINGHOUSE, FUSED OR NON-FUSED AND SIZED AS INDICATED. NEMA 3R WHEN EXPOSED TO WEATHER
10. PANELS SHALL BE SQUARE 'D', GENERAL ELECTRIC OR EQUAL, TYPE AND NUMBER OF BREAKERS AS INDICATED ON PANEL SCHEDULE. STENCIL PANEL DESIGNATION ON INSIDE OF PANEL. ALL TWO-POLE BREAKERS SHALL BE COMMON TRIP. PROVIDE TYPE WRITTEN SCHEDULE IN EACH LOAD CENTERS. CONNECTION TO MAIN BUS SHALL BE WITH BURNDY ANNULAR COMPRESSION LUGS. PANELS AIC RATING SHALL BE AS INDICATED ON PLANS.
11. PROVIDE NAMEPLATES FOR ALL PANEL BOARDS, DISCONNECTS, TRANSFORMER, TERMINAL CABINETS AND ALL ELECTRICAL EQUIPMENT IDENTIFIED BY NAME ON DRAWINGS.
12. ALL ELECTRICAL MATERIALS, DEVICES, APPLIANCES AND EQUIPMENT SHALL BE LABEL LISTED BY AN APPROVED THIRD PARTY TESTING AGENCY.
13. LOAD DATA IS BASED ON INFORMATION GIVEN ENGINEER AT TIME OF DESIGN. VERIFY ALL EQUIPMENT AND PANEL SIZES BEFORE ORDERING AND BEFORE INSTALLATION.
14. ALL EXTERIOR ELECTRICAL EQUIPMENT SHALL BE ANCHORED TO COMPLY WITH LOCAL CODE FOR WIND RESISTANCE.
15. ALL ELECTRICAL AND COMMUNICATIONS OUTLETS TO BE AT 15" A.F.F TO BOTTOM OF OUTLET UNLESS OTHERWISE NOTED, ALL LIGHT SWITCHES SHALL BE @ 42" AFF. TO BOTTOM OF SWITCH.
16. TIME CLOCK FOR LIGHTING CONTROL TO BE AN ASTRONOMICAL TIME CLOCK.
17. THE CONTRACTOR SHALL CONTACT THE LOCAL POWER COMPANY AND OBTAIN, IN WRITING, THE AVAILABLE FAULT CURRENT OF THE UTILITY TRANSFORMER. THE CONTRACTOR SHALL ENSURE THAT ALL ELECTRICAL EQUIPMENT HAS AN AMP INTERRUPTING CAPACITY (AIC) GREATER THAN THE AVAILABLE FAULT CURRENT AT ANY POINT IN THE ELECTRICAL DISTRIBUTION SYSTEM.
18. WIRING METHOD:
    ALL CONDUCTORS SHALL BE INSTALLED IN ELECTRICAL METALLIC TUBING (EMT) UNLESS OTHERWISE NOTED. ALL FITTINGS AND COUPLINGS FOR EMT CONDUIT SHALL BE ALL STEEL RAIN TIGHT COMPRESSION TYPE OR ALL STEEL CONCRETE TIGHT SET SCREW TYPE.
    SCHEDULE 40 PVC CONDUIT, WITH FITTINGS AND COUPLINGS APPROPRIATE FOR THE USE, SHALL BE USED UNDERGROUND OR BELOW SLABS ON GRADE.
19. SEAL ALL NEW CONDUIT PENETRATIONS THROUGH FIRE RATED WALLS, CEILINGS, FLOORS, ETC., TO MAINTAIN EXISTING FIRE RATING CONDITIONS. FURNISH AND INSTALL FIRE RATED ENCLOSURES FOR ALL EQUIPMENTS PENETRATING FIRE RATED ENVELOPES, SPACES, ECT.
20. ELECTRICAL CONTRACTOR IS RESPONSIBLE TO PROVIDE WIRING FOR HVAC SYSTEM: A/C EQUIPMENT(S), SMOKE DETECTORS, THERMOSTATS, TEST STATIONS, MOTORIZED VOLUME DAMPERS, ETC. ELECTRICAL CONTRACTOR SHALL COORDINATE WITH MECHANICAL DRAWINGS AND PROVIDE ALL NECESSARY CONTROL WIRING. ELECTRICAL CONTRACTOR TO THOROUGHLY REVIEW MECHANICAL PLANS AND PROVIDE POWER TO ANY MECHANICAL EQUIPMENT OR DEVICE THAT IS NOT SHOWN ON ELECTRICAL PLANS BUT IS SHOWN ON MECHANICAL PLANS.
21. INSTALL "GFCI" GROUND FAULT INTERRUPTER RECEPTACLES WITH WEATHERPROOF COVER WITHIN 25 FT OF HVAC EQUIPMENT, MOUNT RECEPTACLE ON UNISTRUT (UNLESS HVAC EQUIPMENT IS SPECIFIED WITH FACTORY INSTALLED CONVENIENT RECEPTACLE) .
22. WHEN NEW ELECTRIC SERVICE IS BEING INSTALLED, IT IS THE GENERAL CONTRACTOR'S RESPONSIBILITY TO COORDINATE WITH FPL/FPL ENGINEERS ON THE SIZE OF THE FPL TRANSFORMER THAT IS REQUIRED TO PROVIDE THE NEW ELECTRIC SERVICE SHOWN ON ELECTRIC PLANS, GC HAS TO INFORM THE OWNER ABOUT ANY EXTRA FPL CHARGES THAT MIGHT OCCUR IN ORDER TO PULL NEW SERVICE. THIS HAS TO BE DONE AS EARLY AS POSSIBLE DURING THE BIDDING PROCESS.
23. ELECTRICAL SERVICE EQUIPMENT MUST BE 3' ABOVE MSL, AND 8' ABOVE N.V.G.D. VERIFY AT SITE. ALL ELECTRICAL EQUIPMENTS SHALL BE INSTALLED ABOVE FLOOD LEVEL.
24. CONTRACTOR MUST VISIT THE SITE PRIOR TO BID OR CONSTRUCTION TO VERIFY ALL EXISTING CONDITIONS. BEFORE SUBMITTING BID, BECOME THOROUGHLY FAMILIAR WITH ACTUAL EXISTING CONDITIONS AT THE BUILDING SITE. THE INTENT OF THE WORK IS SHOWN ON THE DRAWINGS AND DESCRIBED HEREINAFTER. BY THE ACT OF SUBMITTING A BID PROPOSAL FOR WORK, THE CONTRACTOR SHALL BE DEEMED TO HAVE MADE SUCH STUDY AND EXAMINATION AND TO ACCEPT ALL CONDITIONS PRESENT AT THE SITE. NO REQUEST FOR ADDITIONAL PAYMENT SHALL BE CONSIDERED AS VALID, DUE TO THE FAILURE TO ALLOW FOR CONDITIONS WHICH MAY EXIST. CONTRACTOR TO REPLACE ANY EXISTING DEVICE OR COMPONENT THAT IS CALLED AS EXISTING IF IT IS NOT FULLY OPERATIONAL.

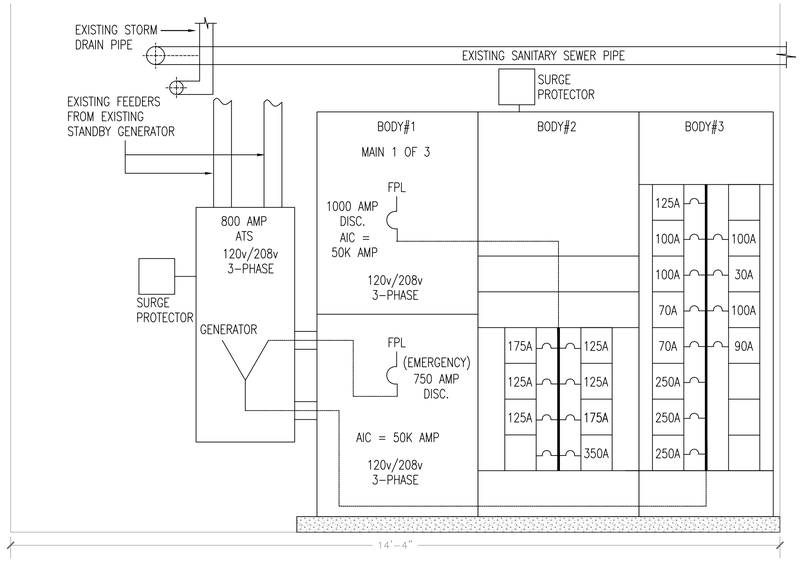

EXISTING ELECTRICAL SERVICE ELEVATION - EAST WALL OF ELEC. ROOM

SCALE: 3/4"=1'-0"

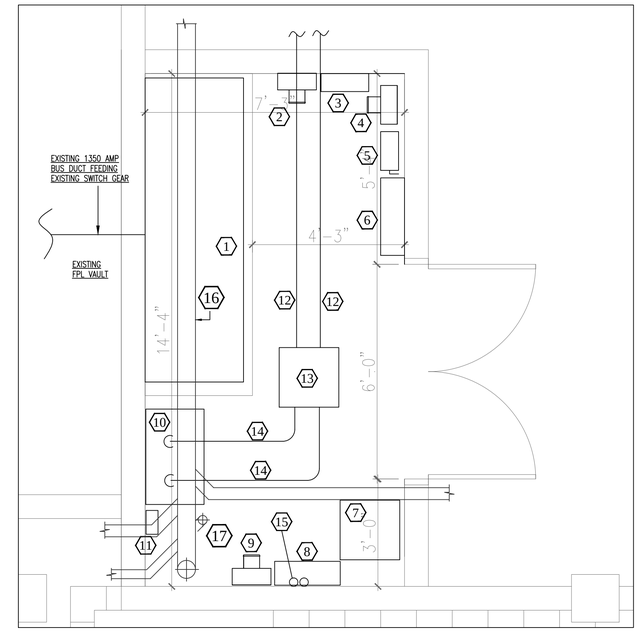

EXISTING ELECTRICAL ROOM - DEMO PLAN

SCALE: 1/2"=1'-0"

EXISTING ELECTRICAL SERVICE DESCRIPTION:

1. EXISTING MAIN SWITCH GEAR CONSISTS OF (3) SECTIONS EACH RATED 1600 AMP 120v/208v 3-PHASE.
2. THE ACTUAL AMPACITY OF THE ELECTRICAL SERVICE AS LABELED ON THE EXISTING SWITCH GEAR SECTION (1) IS 1350 AMP / 120v-208v/ 3-PHASE.
3. SECTION 1 OF THE EXISTING SWITCH GEAR HAS TWO MAIN DISCONNECTS.
   a. MAIN 1 OF 2 IS 1000 AMP AND FEEDS SECTION 2 OF THE SWITCH GEAR.
   b. MAIN 2 OF 2 IS 750 AMP AND FEEDS SECTION 3. THIS IS THE EMERGENCY MAIN THAT IS FED FROM GENERATOR THROUGH EXISTING 800 AUTOMATIC TRANSFER SWITCH
4. SECTION 2 OF THE EXISTING SWITCH GEAR IS A MAIN DISTRIBUTION PANEL THAT FEEDS EXISTING NON EMERGENCY LOADS
4. SECTION 3 OF THE EXISTING SWITCH GEAR IS A MAIN DISTRIBUTION PANEL THAT FEEDS EXISTING EMERGENCY LOADS (FED FROM STANDBY GENERATOR THRU EMERGENCY MAIN IN SECTION 1)

NOTE: 1

ALL NEW ELECTRICAL EQUIPMENT REPLACEMENT WILL HANDLE THE PREVIOUSLY CONNECTED LOAD PLUS THE LOAD DIFFERENCE FROM THE BASEMENT A/C EQUIPMENT (REPLACEMENT) AND THE ADDITION OF NEW A/C EQUIPMENT FOR THE OFFICE AT FIRST FLOOR.
SEE LOAD CALCULATION ON SHEET E-2.

SCOPE OF WORK

1. REPLACE THE EXISTING ELECTRICAL SWITCH GEAR AND EXISTING AUTOMATIC TRANSFER SWITCH WITH NEW EQUIPMENT.
2. INSTALL NEW MAIN DISTRIBUTION PANEL AND CONNECT EXISTING FEEDERS THAT ARE CURRENTLY FED FROM EXISTING ELECTRICAL SWITCH GEAR TO NEW BREAKERS INSTALLED IN THE NEW MAIN DISTRIBUTION PANEL AS OUTLINED ON SHEET E-2
3. INSTALL NEW AUTOMATIC TRANSFER SWITCH TO FEED THE WHOLE BUILDING LOAD
4. RECONNECT EXISTING FEEDERS RUNNING FROM EXISTING GENERATOR TO NEW AUTOMATIC TRANSFER SWITCH
5. INSTALL NEW MAIN BREAKER FOR THE ELECTRIC SERVICE AND PROVIDE WIRING AS OUTLINED ON SHEET E-2
6. REMOVE EXISTING ELECTRICAL EQUIPMENT IN THE ELECTRICAL ROOM THAT ARE ABANDONED OR NOT IN USED.
7. REFEED EXISTING 400 AMP PANEL IN THE ELECTRICAL ROOM FROM NEW MAIN DISTRIBUTION PANEL AS OUTLINED ON SHEET E-2
8. INCLUDED IN SCOPE OF WORK AND AS PART OF THE ELECTRICAL CONTRACTOR WORK IS TO PROVIDE LABELING FOR ALL EXISTING PANELS IN THE CITY HALL BUILDING. THE LABELING INCLUDES PROVIDING BRANCH CIRCUIT IDENTIFICATIONS AND PROVIDING A STICKER LABEL AT THE EXISTING OUTLETS AND DISCONNECTS WITH CIRCUIT NUMBER AND PANEL THAT IS FED FROM.

NOTE:

THE ABOVE SCOPE OF WORK IS GENERIC. ELECTRICAL CONTRACTOR IS RESPONSIBLE TO PROVIDE FULLY OPERATING SYSTEM PER APPLICABLE CODES AND PROVIDE ANY LABOR, WORK OR EQUIPMENT THAT IS NECESSARY FOR THE SYSTEM TO PERFORM AS INTENDED EVEN IF SUCH DETAILS ARE NOT MENTIONED IN THE SCOPE OF WORK.

KEY NOTES

1. EXISTING 1600 AMP RATED 120v/208v 3-PHASE SWITCH GEAR TO BE REPLACED. ALL BRANCH CIRCUIT FEEDERS CONNECTED TO THE EXISTING SWITCH GEAR TO BE LABELED (BEFORE DISCONNECTION) AND PRESERVED TO BE RE-CONNECTED TO NEW MAIN DISTRIBUTION PANEL. SEE SHEET E-2.
2. EXISTING ELECTRIC METER (FOR THE WHOLE BUILDING) TO REMAIN. THIS ELECTRIC METER IS WIRED TO EXISTING CT CAN INSIDE FPL VAULT. ELECTRICAL CONTRACTOR TO VERIFY PROPER OPERATION AFTER THE NEW ELECTRICAL EQUIPMENT/SERVICE IS INSTALLED.
3. EXISTING EMPTY JBOX (ABANDONED) TO BE REMOVED
4. EXISTING 200 AMP METER FOR METRO PCS TO REMAIN.
5. EXISTING 200 AMP DISCONNECT FOR METRO PCS TO REMAIN. RE-LABEL THIS DISCONNECT AS MAIN 2 OF 2.
6. EXISTING 400 AMP PANEL TO REMAIN.
7. EXISTING TRANSFORMER (ABANDONED) TO BE REMOVED
8. EXISTING 200 AMP DISCONNECT (ABANDONED) TO BE REMOVED
9. EXISTING ELECTRICAL METER (ABANDONED) TO BE REMOVED
10. EXISTING AUTOMATIC TRANSFER SWITCH TO BE REMOVED AND REPLACED WITH NEW AUTOMATIC TRANSFER SWITCH. SEE SHEET E-2
11. EXISTING ELECTRICAL SURGE PROTECTOR TO BE REMOVED
12. EXISTING FEEDERS FROM EXISTING STANDBY GENERATOR TO REMAIN
13. EXISTING CEILING MOUNTED JBOX TO REMAIN
14. EXISTING AUTOMATIC TRANSFER SWITCH FEEDERS (FROM EXISTING STANDBY GENERATOR) TO REMAIN AND RE-ROUTED/EXTENDED TO NEW AUTOMATIC TRANSFER SWITCH AS OUTLINED IN E-2
15. EXISTING CONDUITS (ABANDONED) TO REMAIN. REMOVE ANY EXISTING FEEDERS THAT ARE NOT USED OR ABANDONED.
16. EXISTING BUILDING SANITARY SEWER PIPE THAT PASSES ABOVE THE ELECTRICAL EQUIPMENT/SERVICE HAS TO BE ENCASED WITH 2" THICK CONCRETE. USE 3/8" DIAMETER U-HANGERS, DOWEL MINIMUM 4" INTO THE EXISTING SLABS (ON BOTH SIDES OF THE HANGER). SET IN CONCRETE EPOXY 12" FROM WALL AND MAXIMUM 4 FEET OFF CENTER.
    CONTRACTOR TO RELOCATE ANY ELECTRICAL BRANCH CIRCUIT CONDUIT OR JUNCTION BOX THAT RUNS OR LOCATED IN THE ENCASEMENT SPACE
17. EXISTING BUILDING DRAINAGE PIPE TO REMAIN. CONTRACTOR TO VERIFY THAT THIS PIPE RUNS OUTSIDE ELECTRICAL EQUIPMENT DEDICATED SPACE AS OUTLINED PER NEC 2008.

NOTES

ELECTRICAL CONTRACTOR (EC) SHALL:

1. VERIFY ALL EXISTING CONDITIONS AND REPORT ANY DISCREPANCY TO THE ENGINEER OF RECORD.
2. VERIFY EXISTING BREAKER SIZES IN THE EXISTING SWITCH GEAR BEFORE REMOVING THE EXISTING EQUIPMENT.
3. VISIT THE JOB SITE AND GET FAMILIAR WITH THE EXISTING ELECTRICAL CONNECTIONS AND FULLY UNDERSTAND THE SCOPE OF WORK AND THE BUILDING OPERATION BEFORE BIDDING. IF ANY ASPECT OF THE PROJECT IS NOT CLEAR TO EC, EC SHALL CONTACT ENGINEER OF RECORD FOR MORE INFORMATION.

BUILDING OPERATION NOTE

1. ELECTRICAL SERVICE EQUIPMENT THAT IS BEING REPLACED FEEDS NORTH MIAMI CITY HALL BUILDING. THIS BUILDING HAS TO BE OPERATIONAL ALL THE TIME.
2. ELECTRICAL WORK THAT IS TO BE DONE FROM THE TIME OF POWER DISCONNECTION TO THE TIME THE POWER IS RESTORED HAS TO BE AGREED ON AND APPROVED IN WRITING BETWEEN THE ELECTRICAL CONTRACTOR THE WILL BE HIRED TO DO THIS PROJECT AND NORTH MIAMI CITY HALL OFFICIALS.
3. THIS TIME FRAME IS VERY CRITICAL AND IT IS THE RESPONSIBILITY OF THE ELECTRICAL CONTRACTOR TO RESTORE THE POWER TO THE BUILDING WITHIN THIS TIME FRAME.
4. FOR THIS REASON, ELECTRICAL CONTRACTOR HAS TO BE FULLY PREPARED AND HAVE ALL THE EQUIPMENT READY TO PERFORM THIS TASK BEFORE DISCONNECTING POWER OFF THE BUILDING.

S&D Engineering and Construction, Inc
3107 N.W. 71st. Ave.
Margate, Florida 33063
QB# 52647 CO.# 28388
Tel: (954) 775-0143
Fax: (754) 229-8401

CITY OF NORTH MIAMI CITY HALL
776 N.E. 125 ST., NORTH MIAMI, FL., 33161

Seal

KAMAL HALABI
PE# 63970

Date: 06/12/13
Drawn: KH
Revised:
Revision: (1) 5-28-13 CITY COMMENTS

Job No.
12023E

Drawing No.
E-1

SPECIFICATIONS: SQUARE D I-LINE AMPACITY: 1200 AMP VOLTAGE: 120v/208V- 3PHASE		PANEL- MDP AIC = 65K AMP				MAIN : MLO LOCATION : ELECTRICAL ROOM		
CKT NO	LABEL	RATING	PHASE BUS CON		PHASE BUS CON	RATING	LABEL	CKT NO
1	A/C WATER PUMP	90	ABC		ABC	100	PANEL-BB	2
3	PANEL-BC	30	ABC		ABC	100	PANEL-2E	4
5	PANEL-BA	70	ABC		ABC	100	EXISTING LOAD	6
7	PANEL-BB	70	ABC		ABC	100	EXISTING LOAD	8
9	A/C BASEMENT	50	ABC		ABC	125	EXISTING LOAD	10
11	EXISTING LOAD	250	ABC		ABC	125	PANEL-3B & 4B & 5B	12
13	ELEVATOR	250	ABC		ABC	125	PANEL-3A & 4A & 5A	14
15	PANEL (ELEC. ROOM)	400	ABC		ABC	125	PANEL-1A & 2A & 2D	16
					ABC	125	PANEL-1B & 2B	18
17	FIRST & 2ND FLOOR A/C UNITS	350	ABC		ABC	175	A/C 3RD FLOOR	20
					ABC	175	EXISTING LOAD	22

EQUIPMENT SPECIFICATIONS:

1. MAIN BREAKER 1 OF 2:
   MANUFACTURER & MODEL: SQUARE D
   VOLTAGE: 120v/208v
   PHASE: 3
   MAXIMUM AVAILABLE FAULT CURRENT (RMS) = 65K AMP

2. AUTOMATIC TRANSFER SWITCH
   MANUFACTURER & MODEL: ASCO 7000
   VOLTAGE: 120V/208V
   PHASE: 3

NOTE:
AUTOMATIC TRANSFER SWITCH TO HAVE AUTOMATIC LOAD SHEEDING CAPABILITY UP TO FOUR (4) LOADS.

3. MAIN DISTRIBUTION PANEL:
   MANUFACTURER: SQUARE D
   MODEL: I-LINE ML
   VOLTAGE: 120V/208V
   PHASE: 3
   MAXIMUM AVAILABLE FAULT CURRENT (RMS) = 65K AMP

NOTE:
PROVIDE SURGE PROTECTOR FOR MAIN DISTRIBUTION PANEL & AUTOMATIC TRANSFER SWITCH

KEY NOTES

1. NEW 1200 AMP 120v/208v 3-PHASE MAIN BREAKER
2. NEW 1200 AMP AUTOMATIC TRANSFER SWITCH
3. NEW 1200 AMP MAIN DISTRIBUTION PANEL.
4. EXISTING BUILDING ELECTRIC METER TO REMAIN.
5. EXISTING 200 AMP METER FOR METRO PS TO REMAIN
6. EXISTING 200 AMP DISCONNECT FOR METRO PCS TO REMAIN
7. EXISTING 450 AMP PANEL TO REMAIN. REFEED FROM NEW MDP PANEL
8. EXISTING FEEDERS FROM EXISTING STANDBY GENERATOR TO REMAIN
9. EXISTING CEILING MOUNTED JBOX TO REMAIN
10. EXISTING AUTOMATIC TRANSFER SWITCH FEEDERS (FROM EXISTING STANDBY GENERATOR) TO REMAIN AND RE-ROUTED/EXTENDED TO NEW AUTOMATIC TRANSFER SWITCH AS OUTLINED ON THIS SHEET.
11. NEW ELECTRIC SERVICE FEEDER AS PER ELECTRICAL RISER DIAGRAM

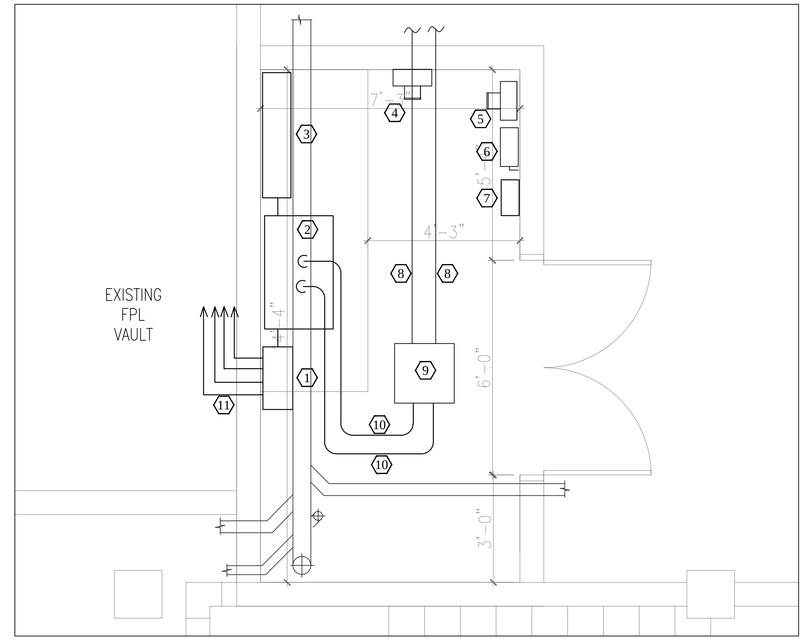

ELECTRICAL ROOM - NEW ELECTRIC SERVICE PLAN

NORTH

SCALE: 1/2"=1'-0"

1

ADDED LOAD CALCULATION:

EXISTING 7.5 TON BASEMENT A/C UNIT (33.4 A /208v/3-PHASE) IS REPLACED WITH NEW 10 TON UNIT (47.2 A/208V/3-PHASE)
ADDED ELECTRICAL LOAD DIFFERENCE = 47.2 A - 33.4 A = 13.8 A

ADDED 5-TON OFFICE A/C UNT (35.4 A/208V/1-PHASE) = 35.4x208V / 360 = 20.4 A

TOTAL EQUIPMENT ADDED LOAD = 13.8 A + 20.4 A = 34.2 A

1

PER FPL HISTORY OF THE LAST 12 MONTH
TOTAL DEMAND LOAD CALCULATIONS
PER NEC 2008 SECTION 220.87

HIGHEST DEMAND LOAD (AUGUST 2012) = 168 KWD = 466.7 AMP

ELEVATOR LOAD (30 HP @ 208V) = 88 AMP

NET ADDED LOAD = 37 AMP

TOTAL LOAD (INCLUDING NEW EQUIPMENT) = 466.7 A + 88 A + 34.2 A = 589 A

TOTAL DEMAND LOAD AT 125% = (466.7 A+ 88 A+34.2 A) x 1.25 = 737 AMP

REPLACED EXISTING ELECTRIC SERVICE WITH NEW 1200 AMP 120v/208v 3-PHASE SERVICE.

STANDBY GENERATOR LOAD:
EXISTING GENERATOR IS 250 KVA 120v/208v 3-PHASE.
AS PER ELECTRICAL LOAD CALCULATIONS, EXISTING GENERATOR IS ADEQUATE.
NOTE:
AUTOMATIC TRANSFER SWITCH LOADING SHEDDING OPTION TO TURN THE BASEMENT A/C OFF INCASE THE LOAD EXCEEDS THE GENERATOR CAPACITY.

FPL

April 23, 2013

Kamal Halabi
21589 Yellowstone Park Dr
Boca Raton, Florida 33428

Re: Available Fault Current for **North Miami City Hall**

Thank you for contacting FPL about the available fault current at **North Miami City Hall**. Based on the plans you have provided dated April 16, 2013 the maximum available fault current at the transformer secondary terminals is estimated to be 46,055 symmetrical amperes at 120/208 volts. The protective device on the line side of the transformer currently in place or to be installed and serving your property located at the subject location is a 80 amp type "KS" fuse. The primary service voltage is 13.2kV L-L. This calculated symmetrical fault current is not intended for use as the basis for motor starting calculations and does not include:

- Consideration for any motor contribution or
- Fault current asymmetry.

The FPL equipment currently serving or planned to serve your facility may change over time as a result of any number of factors, including but not limited to transformer replacements due to load growth, electrical grid changes or emergencies. As a result, although we are providing you with this information for the sole purpose of assisting you in the completion of your study, you and your client should not design, install **or operate** your system in reliance upon any expectation that the specific size and type of equipment currently in place will remain so. If and when the size and type of the equipment changes, our employees are not always in a position to immediately notify customers.

As the construction project progresses, any questions or information you may need can be communicated through me. I have enclosed my business card for easy reference and look forward to hearing from you in the near future.

Sincerely,

Roy Torres, E.I
Customer Project Manager

ELEC. RISER DIAGRAM KEY NOTES

1. NEW (4) SETS OF 4#350 MCM CU IN 3-1/2" CONDUIT EACH
2. NEW 1#3/0 CU GRD. INSTALL AS PER NEC 250
3. NEW (4) SETS OF 4#350 MCM CU & 1# 3/0 CU GRD IN 3-1/2" CONDUIT EACH
4. NEW (2) SETS OF 4#500 MCM CU & 1# 1/0 CU GRD IN 3-1/2" CONDUIT EACH
5. EXISTING FEEDERS FROM GENERATOR IN EXISTING (2) 3-1/2" CONDUITS: CONTRACTOR TO VERIFY EXISTING FEEDERS ARE MINIMUM (2) SETS OF 4#500 MCM CU & 1# 1/0 CU GRD. OTHERWISE REPLACE WITH NEW.
6. NEW 4#600 MCM CU & 1# 3 CU GRD IN 3-1/2" CONDUIT EACH
7. NEW 4#8 CU & 1# 10 CU GRD IN 1" CONDUIT EACH
8. EXISTING 1/0 CU GRD. CONTRACTOR TO FIELD VERIFY EXISTING GRD SIZE TO BE MINIMUM 1/0 CU. OTHERWISE, REPLACE WITH NEW.

NOTE:
AUTOMATIC TRANSFER SWITCH LOAD SHEEDING TO TURN OFF THE FOLLOWING LOAD IF ELECTRICAL LOAD EXCEEDS GENERATOR CAPACITY:
1- BASEMENT A/C UNIT
ELECTRICAL CONTRACTOR TO RUN LOW VOLTAGE WIRING TO BASEMENT AHU THERMOSTAT.

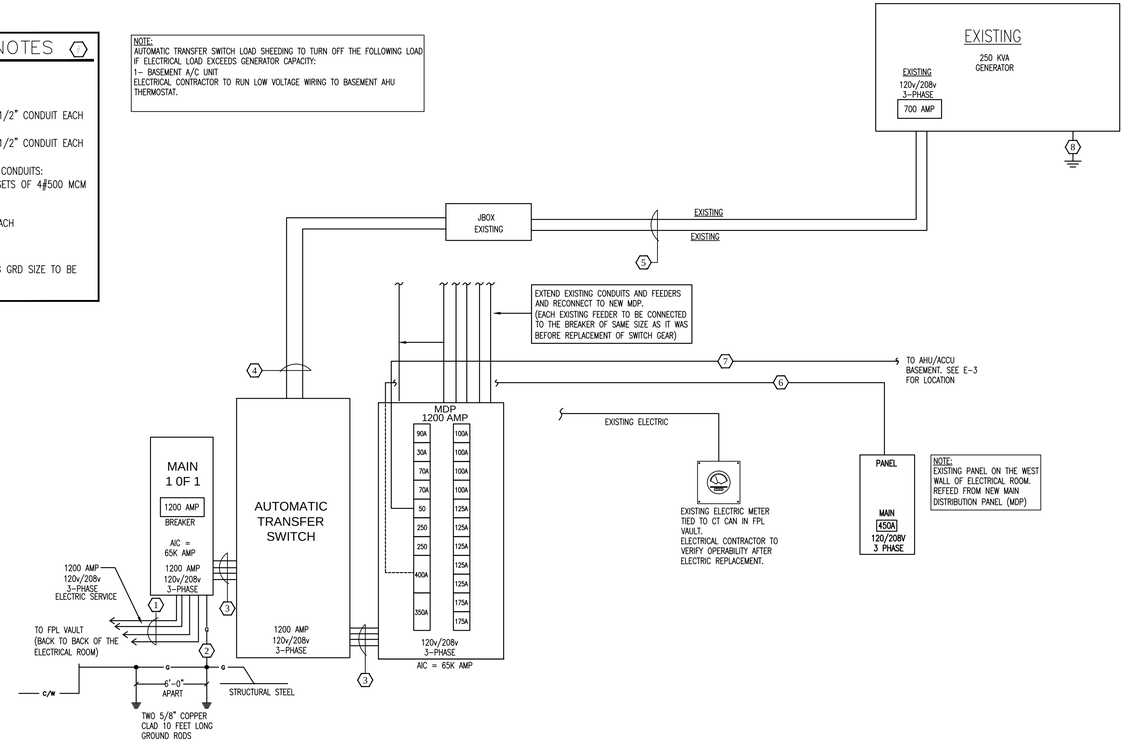

PROPOSED ELECTRICAL RISER DIAGRAM

NTSC

S&D Engineering and Construction, Inc
3107 N.W. 71st. Ave.
Margate, Florida 33063
QB# 52847 COA# 28388
Tel: (954) 775-0143
Fax: (754) 229-8401

CITY OF NORTH MIAMI CITY HALL
776 N.E. 125 ST., NORTH MIAMI, FL., 33161

Seal

KAMAL HALABI
PE# 63970

Date: 06/12/13
Drawn: KH
Revised:
Revision: (1) 5-29-13 CITY COMMENTS

Job No.
12023E

Drawing No.
E-2

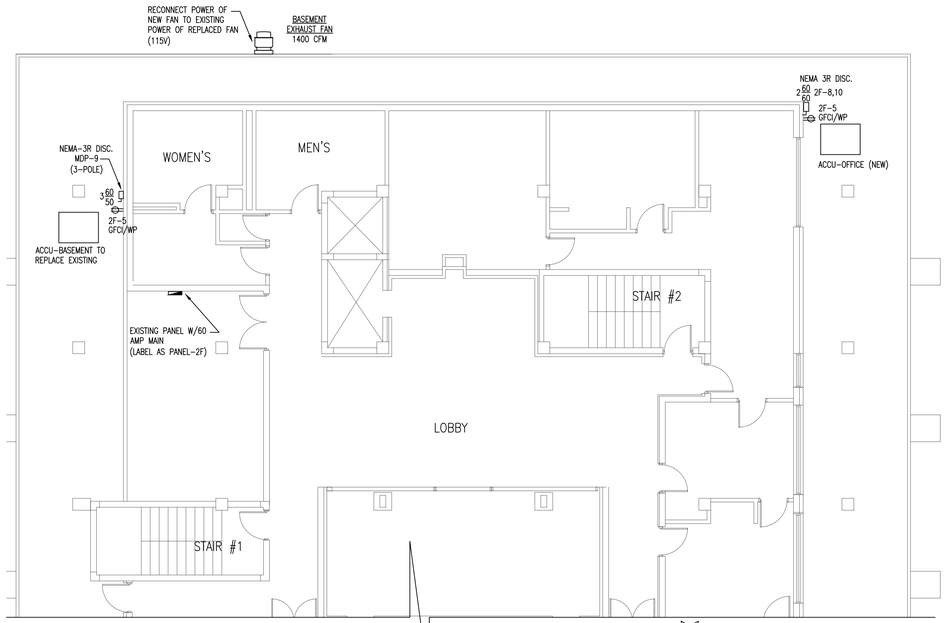

BASEMENT & OFFICE ACCU ELECTRICAL.- 2ND FLOOR

NORTH

SCALE: 1/8"=1'-0"

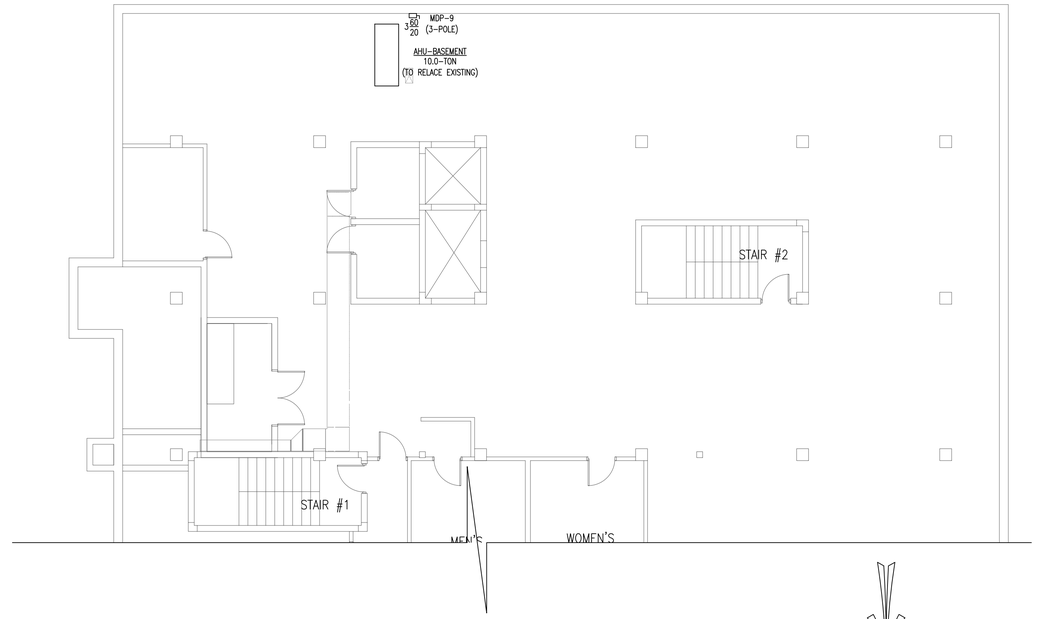

BASEMENT AHU ELECTRICAL PLAN

NORTH

SCALE: 1/8"=1'-0"

ELECTRICAL PLAN LEGEND

	RECEPTACLE DUPLEX 120V
J	JUNCTION BOX
	DISCONNECT SWITCH
	ELECTRICAL PANEL
WP	WEATHER PROOF
GFCI	GROUND FAULT CURRENT INTERRUPTER

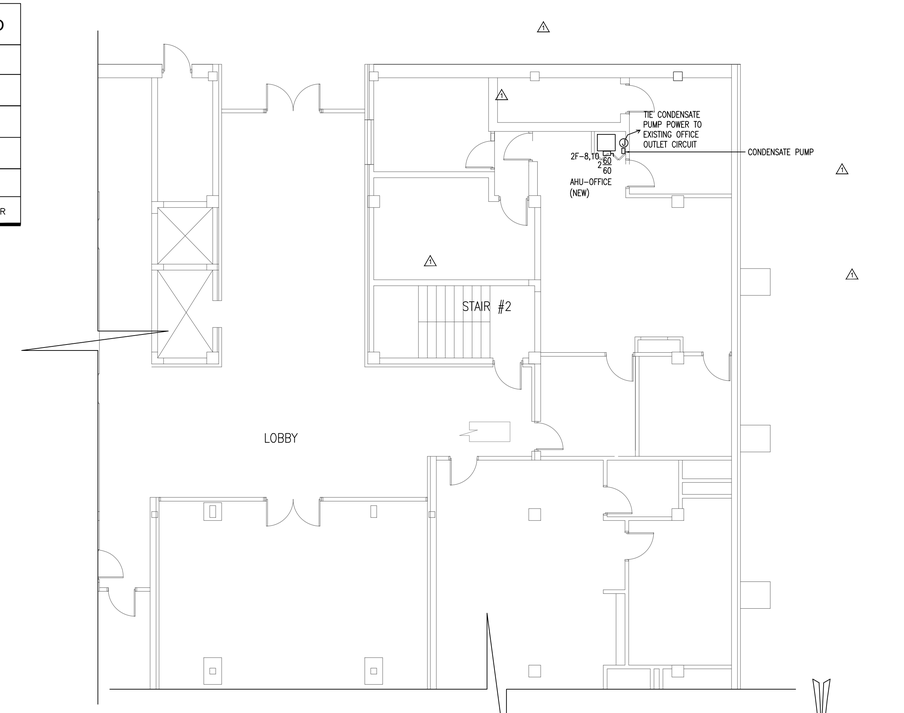

AHU-ELECTRICAL FIRST FLOOR - OFFICE

NORTH

SCALE: 1/8"=1'-0"

PANEL-2F (EXISTING)

SPECIFICATIONS: EXISTING — MAINS: 60 AMP

AMPACITY 60 AMPS — LOCATION: 2D FLOOR MECH ROOM

VOLTAGE: 120/208V, 3PH, 4WIRE — MOUNTING: SURFACE

AMPS	POLE	TOTAL VA	COND. SIZE	WIRE SIZE	GRD SIZE	DESCRIPTION	CIRC No.	CIRC No.	DESCRIPTION	GRD SIZE	WIRE SIZE	COND. SIZE	TOTAL VA	POLE	AMPS
60	2					MAIN BREAKER (EXISTING)	1	2	SPACE						
60	2						3	4	SPACE						
20	1	360	1	12	12	RECEPT. (NEXT TO ACCU)	5	6	SPARE (EXISTING)					1	20
						SPACE	7	8	A/C OFFICE	10	6	1-1/4"	8600	2	60
						SPACE	9	10		10	6	1-1/4"		2	60

SUBTOT. 360 VA — TOTAL LOAD = 8,960 VA — SUBTOT. 8600 VA

PANEL-2F (EXISTING) DEMAND LOAD CALCULATIONS

TOTAL RECEP. LOAD	360 VA			
RECEP. 1st 10,000 VA @ 100%	360	@100%	360	VA
REST @ 50%	0	@50%	0	VA
LIGHTING LOAD @ 125%	0	@125%	0	VA
LARGEST MOTOR @125%	0	@125%	0	VA
OTHER MOTORS @ 100%	0	@100%	0	VA
AIR CONDITIONERS @ 100%	8,600	@100%	8,600	VA
REST OF ALL OTHER LOADS @ 100%	0	@100%	0	VA
TOTAL LOAD =			8,960	VA

CURRENT PER PHASE = TOTAL LOAD (VA) / (208x1.732)
= 25 AMPS

* NON SIMULTANEOUS LOAD

VERIFY ALL EQUIPMENT LOAD AND BREAKER AND WIRE SIZES PRIOR TO INSTALLATIONS

S&D Engineering and Construction, Inc
3107 N.W. 71st. Ave.
Margate, Florida 33063
QB# 52647 COA# 28388
Tel: (954) 775-0143
Fax: (754) 229-8401

CITY OF NORTH MIAMI CITY HALL

776 N.E. 125 ST., NORTH MIAMI, FL., 33161

Seal

KAMAL HALABI
PE# 63970

Date: 06/12/13
Drawn: KH
Revised:
Revision:

Job No.
12023E

Drawing No.
E-3

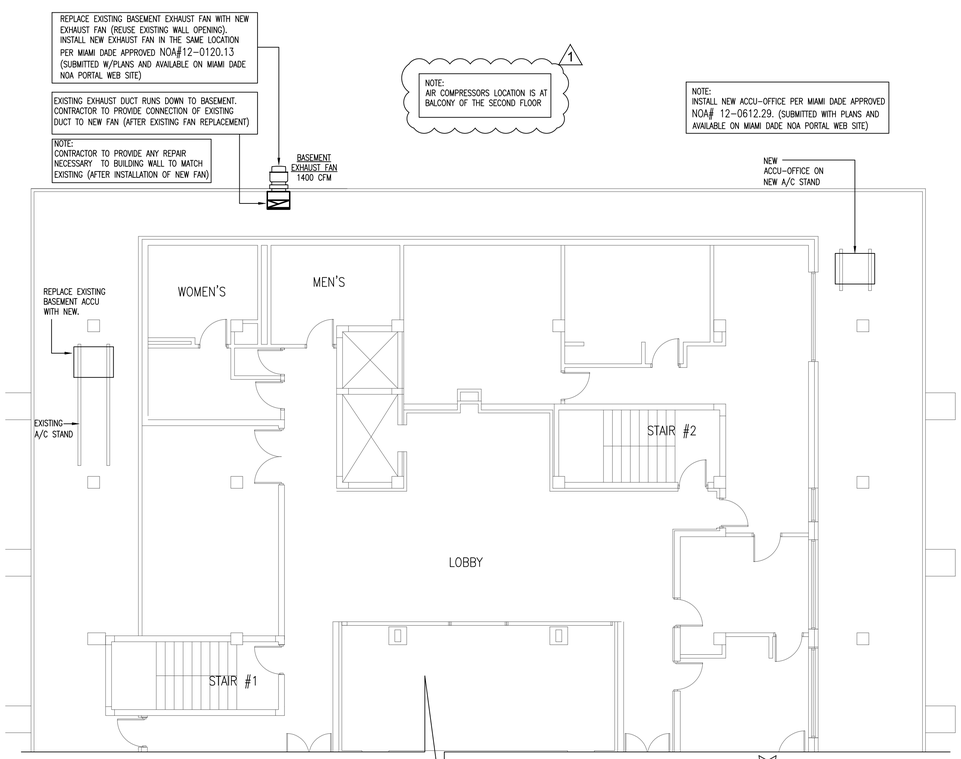

NEW MECHANICAL EQUIPMENT LOCATION - SECOND FLOOR

SCALE: 1/8"=1'-0"

1

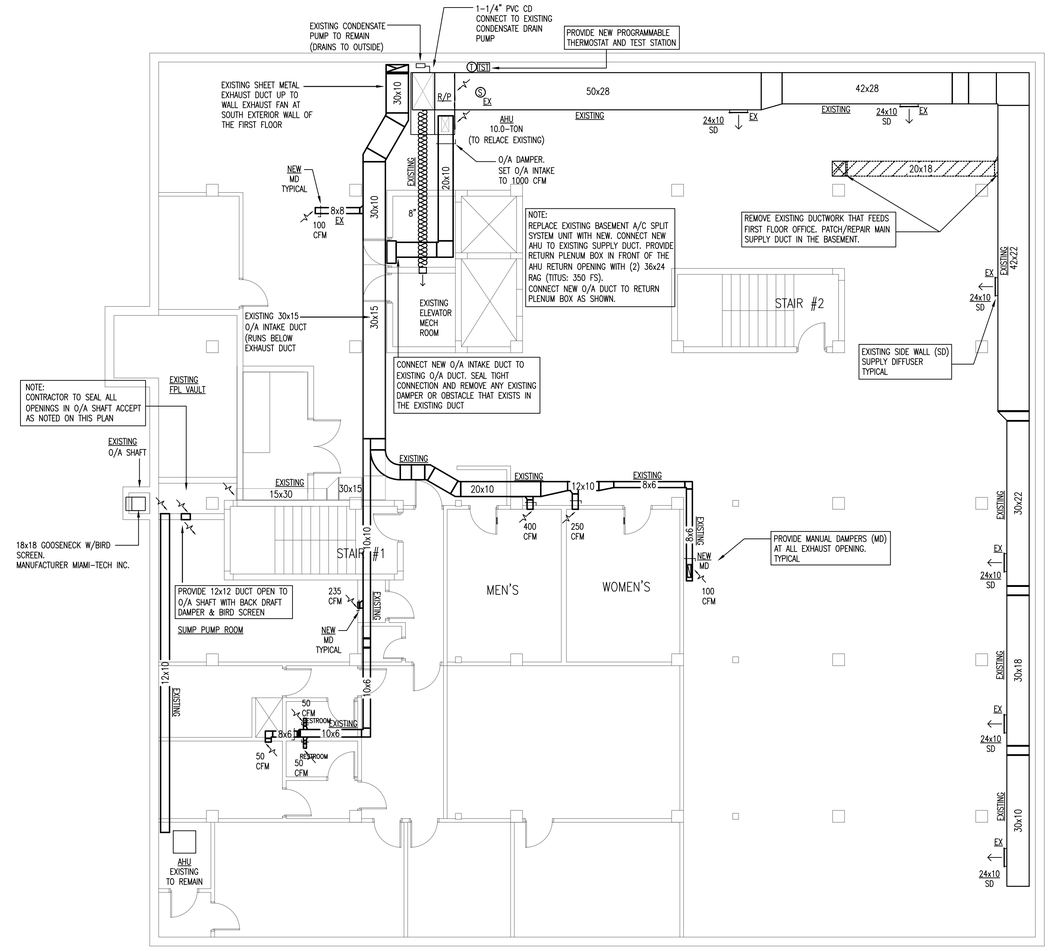

BASEMENT MECHANICAL PLAN

SCALE: 1/8"=1'-0"

NORTH

Ventilation per FMC 2010 Table 403.3

			BASEMENT (STORAGE)
	Ventilation Zone Name		
1)	**Minimum O/A required at Supply Outlet Voz:**		
a)	*People Outdoor Air Flow Rate*	*Rp*	0
	Area Outdoor Air Flow Rate	*Ra*	0.12
b)	Zone PoPulation	*Pz =*	4
c)	Zone Net Occupiable Floor Area	*Az =*	6000
d)	O/A required in Breathing Zone: ***Vbz =RpPz + RaAz***	*Vbz =*	720
e)	Zone Air Distribution Effectiveness	*Ez =*	1
f)	Zone outdoor Air Flow Rate: **Voz = Vbz/Ez**	*Voz =*	720
	O/A INTAKE REQUIRED FOR BASEMENT =		**720**

SET O/A INTAKE FOR AHU-BASEMENT TO 1000 CFM

EXHAUST REQUIRED:

BASEMENT BATHROOMS:

NUMBER OF BATHROOMS FIXTURES = 15 @ 50 CFM / FIXTURE
BATHROOM EXHAUST = 750 CFM
TOTAL EXHAUST FROM BASEMETNT = 750 CFM + 200 CFM (FROM TWO EXISTING EXHAUST OPENINGS) = 950 CFM
MAKE UP AIR FOR BASEMENT IS PROVIDED THROUGH O/A INTAKE OF THE BASEMENT AHU WHICH EQUALS TO 1000 CFM

SUMP PUMP ROOM @ 1.0 CFM PER SQ FT (235 SQ FT)
EXHAUST REQUIRED = 235 CFM

BASEMENT OFFICE BATHROOMS AND BREAK ROOM = 150 CFM

MAKE UP AIR FOR SUMP ROOM & BASEMENT OFFICES BATHROOMS AND BREAK ROOM (TOTAL = 385 CFM) IS PROVIDED THROUGH THE O/A SHAFT INTAKE

TOTAL BASEMENT EXHAUST = 950 + 382 = 1332 CFM

PROVIDEDED EXHAUST FAN 1400 CFM

AC SPECIFICATIONS	
NAME	**A/C - BASEMENT**
Manufacturer	**Trane**
Nominal Tons	10.0
EER	11.2
Condenser Model	TTA120
Total Capacity - MBH	124.0
Sensible Capacity - MBH	97.9
Compressor - Qty-Type	2-Scroll
Compressor - RLA-LRA	17.6 - 123
Condenser Fan - HP-FLA	1.0 - 5.0
Voltage	208/3/60
MCA	44.6
MOCP	50
Dimensions - W x D x H	53x41x44
Weight - lbs	440
Liquid Line	1/2
Suction Line	1 - 3/8
AHU Model	TWE120
Enter Air - DB/WB	80 / 67
CFM	4000
ESP	1.0"
Blower Motor - HP/FLA	2.0 - 7.0
Heat kW	**NO HEATER**
Voltage	208/3/60
MOCP	20
Filters - Qty-Size	4-16x25x1
Dimensions - W x D x H	28.5x67x59
Weight - lbs	395

WALL EXHAUST FAN SCHEDULE

TAG	BASIS OF DESIGN		FLOW RATE	STATIC PRESSUER	FRPM	ELECTRICAL DATA				Wall Opening (In)		WEIGHT
	MANUFACTURER	MODEL OR SERIES	CFM			Operatin HP	Motor HP	Phase	VOLT	Width	Length	(lb)
WALL EXHAUST FAN#1	GREENHECK	CWB-131	1400	0.5	1274	0.27	1/3	1-phase	115v	12.5	12.5	65

NOTE:
1 **INSTALL EXHAUST FAN AS PER MIAMI DADE APPROVED NOA# 12-0120.13**
2 RECONNECT NEW FAN TO EXISTING FAN SWITCH IN BASMENT
3 PROVIDE CURB AND INSTALLATION ACCESSORIES AS OUTLINED IN THE NOA

S&D Engineering and Construction, Inc
3107 N.W. 71st. Ave.
Margate, Florida 33063
QB# 52647 COA# 28388
Tel: (954) 775-0143
Fax: (754) 229-8401

CITY OF NORTH MIAMI HALL
776 N.E. 125 ST., NORTH MIAMI, FL., 33161

Seal
KAMAL HALABI
PE# 63970

Date: 06/12/13
Drawn: KH
Revised:
Revision: (1) 5-28-13 CITY COMMENTS

Job No.
12023E

Drawing No.
M-1

AC SPECIFICATIONS	
Name	AC-OFFICE
Manufacturer	Trane
Nominal Tons	5.0
SEER	13.0
Condenser Model	4TTB3060
Total Capacity - MBH	61.6
Sensible Capacity - MBH	44.8
Compressor - Qty-Type	1 - Scroll
Compressor - RLA-LRA	26.8 - 134
Condenser Fan - HP-FLA	1/5 - 0.93
MCA	35.0
MOCP	60
Dimensions - W x D x H	35x39x43
Weight - lbs	230
Liquid Line	3/8
Suction Line	7/8
AHU Model	TAM4A060
Enter Air - DB/WB	80 / 67
CFM	2000
ESP	0.5"
Blower Motor - HP/FLA	1.0 - 7.6
Heat kW	7.2
MCA	53
MOCP	60
Filters - Qty-Size	1-22x20x1
Dimensions - W x D x H	24x22x62
Weight - lbs	165

MECHANICAL LEGEND

S	SMOKE DETECTOR
TST	TESTER
FD	FIRE DAMPER
T	PROGRAMMABLE THERMOSTAT
	MANUAL VOLUME DAMPER
MD	MOTORIZED DAMPER
	SUPPLY AIR DIFFUSER
	RETURN AIR GRILLE
LxW	FIBERGLASS DUCT WITH R-6 INSULATION
	FLEX DUCT WITH R-6 INSULATION
	EXHAUST FAN
OA	OUTSIDE AIR
AHU	AIR HANDLER UNIT
CFM	CUBIC FEET PER MINUTE
RAG	RETURN AIR GRILLE
ACCU	AIR COMPRESSOR UNIT
EX	EXISTING
N	NEW

1

Ventilation per FMC 2010 Table 403.3

Ventilation Zone Name		OFFICE
1) **Minimum O/A required at Supply Outlet Voz:**		
a) *People Outdoor Air Flow Rate*	*Rp*	5
Area Outdoor Air Flow Rate	*Ra*	0.06
b) Zone PoPulation	*Pz =*	14
c) Zone Net Occupiable Floor Area	*Az =*	1400
d) O/A required in Breathing Zone: ***Vbz =RpPz + RaAz***	*Vbz =*	154
e) Zone Air Distribution Effectiveness	*Ez =*	1
f) Zone outdoor Air Flow Rate: **Voz = Vbz/Ez**	*Voz =*	154

SET O/A INTAKE 175 CFM TO NEW AHU

NOTE:
PER FBC 2010 ENERGY CONSERVATION SECTION 503.2.5.4 (SHUTOFF DAMPER CONTROLS) PROVIDE MOTORIZED DAMPERS FOR O/A INTAKE FOR NEW AHU. CONNECT MOTORIZED DAMPER TO TIME CLOCK TO CLOSE OUTSIDE AIR INTAKE AUTOMATICALLY WHEN THE SPACE SERVED IS NOT IN USE (OFF BUSINESS HOURS).

HVAC DESIGN REQUIRMENTS

DESIGN REQUIRMENT	YES	NO
DUCT SMOKE DETECTOR	X	
FIRE DAMPERS(S)		X
SMOKE DAMPER(S)		X
FIRE RATED ENCLOSURE		X
FIRE RATED ROOF/FLOOR		X
CEILING ASSEMBLY		X
FIRE STOPPING		X
SMOKE CONTROL		X

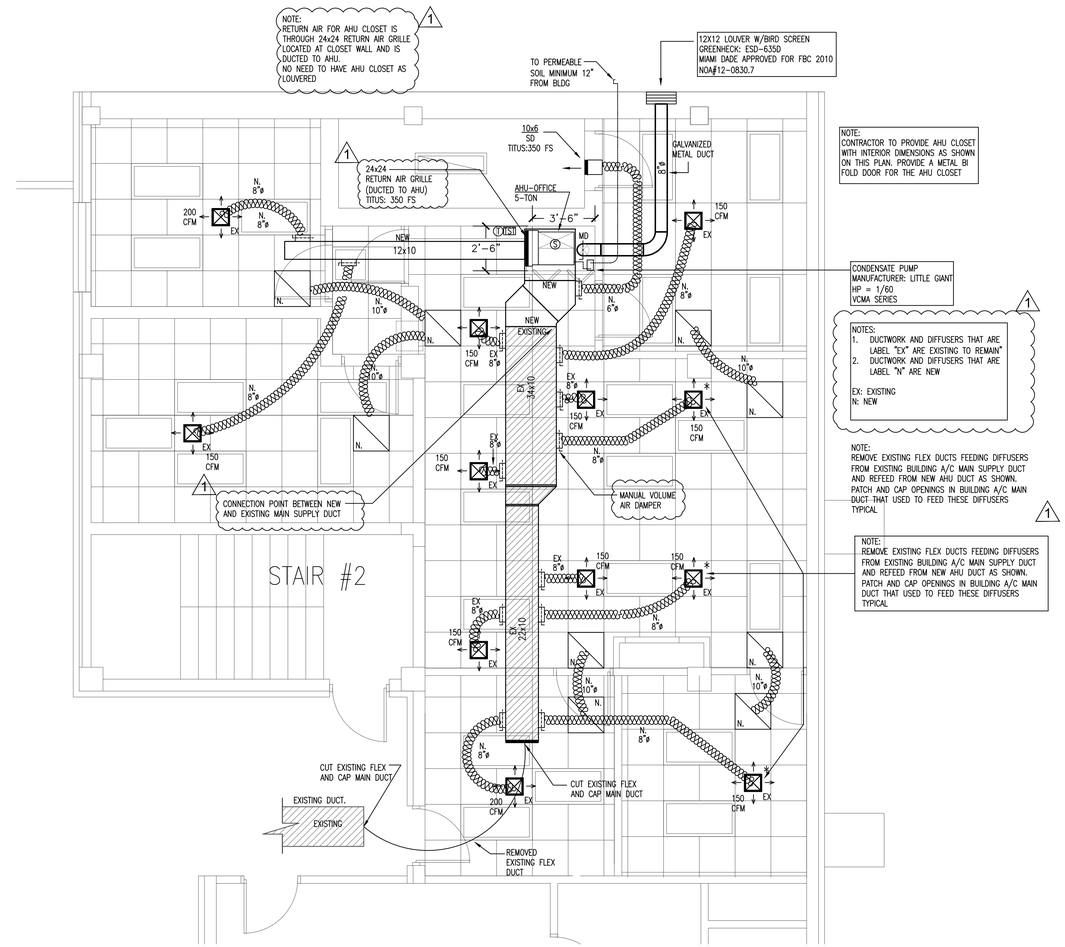

MECHANICAL PLAN FIRST FLOOR - OFFICE

SCALE: 1/8"=1'-0"

NORTH

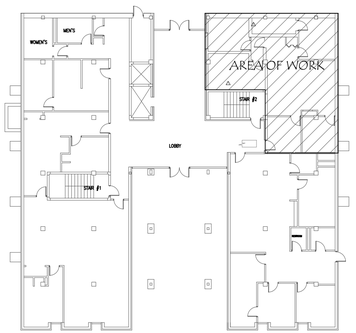

Key Plan

NTSC

S&D Engineering and Construction, Inc
3107 N.W. 71st. Ave.
Margate, Florida 33063
QB# 52847 COA# 28388
Tel: (954) 775-0143
Fax: (754) 229-8401

CITY OF NORTH MIAMI HALL
776 N.E. 125 ST., NORTH MIAMI, FL., 33161

Seal

KAMAL HALABI
PE# 63970

Date: 06/12/13
Drawn: KH
Revised:
Revision: (1) 5-28-13 CITY COMMENTS

Job No.
12023E

Drawing No.
M-2

H.V.A.C. GENERAL NOTES:

ALL WORK SHALL BE DONE IN ACCORDANCE WITH FBC-2010, 2006 NFPA-101, 2006 NFPA-1, 2008 NFPA-70.

1.ALL WORK SHALL BE PERFORMED BY A LICENSED CONTRACTOR IN A FIRST CLASS WORKMANLIKE MANNER. THE COMPLETE SYSTEM SHALL BE FULLY OPERATIVE AND ACCEPTANCE BY THE OWNER AND/OR ARCHITECT MUST BE CONDITION OF THE CONTRACT. SUBMIT SHOP DRAWINGS ON ALL EQUIPMENT, FOR REVIEW PRIOR TO PURCHASING.

2. THE CONTRACTOR SHALL COORDINATE HIS WORK WITH ALL TRADES IN ORDER TO AVOID CONFLICTS. NO CHARGES WILL BE ACCEPTED UNLESS A PRIOR WRITTEN APPROVAL HAS BEEN ISSUED BY THE OWNER/ARCHITECT.

3. THE CONTRACTOR SHALL VISIT THE JOB SITE AND THOROUGHLY FAMILIARIZE WITH EXISTING CONDITIONS. PRIOR TO INSTALLING EQUIPMENT AND/OR FABRICATING DUCTWORK, A.C. CONTRACTOR SHALL CHECK THAT THERE IS SUFFICIENT CLEARANCES FOR EQUIPMENT, DUCTWORK, ETC. AND ALSO TO AVOID ANY INTERFERENCE WITH THE PROCESS OF CONSTRUCTION.

4. DRAWINGS ARE DIAGRAMMATIC ILLUSTRATIONS. DO NOT SCALE DRAWINGS FOR THE EXACT LOCATION OF EQUIPMENT. PIPING, DUCTWORK, ETC. THESE DRAWINGS ARE NOT INTENDED TO SHOW EVERY MINOR DETAIL OF CONSTRUCTION. THE CONTRACTOR SHALL FURNISH AND INSTALL ALL ITEMS REQUIRED FOR A COMPLETE ACCEPTABLE WORKING SYSTEM.

5. CONTRACTOR WILL PAY FOR ALL PERMITS, FEES, INSPECTIONS, AND TESTS.

6. INSTALLATION SHALL BE IN STRICT ACCORDANCE WITH THE RECOMMENDATIONS SET FORTH IN THE LATEST ASHRAE GUIDE. ALL MATERIALS SHALL BE NEW AND SHALL BEAR UNDERWRITER'S LABEL WHERE APPLICABLE.

7. AIR FILTERS SHALL BE INSTALLED ON ALL RETURN AIR EQUIPMENT INLETS. PROVIDE AN EXTRA FILTER, INSTALL AT END OF CONSTRUCTION.

8. ALL REQUIRED INSURANCE SHALL BE PROVIDED BY THE CONTRACTOR FOR PROTECTION AGAINST PUBLIC LIABILITY AND PROPERTY DAMAGE FOR THE DURATION OD THE WORK. ALL WORKMANSHIP AND MATERIALS SHALL BE IN STRICT ACCORDANCE WITH THE APPLICABLE NATIONAL, STATE, AND LOCAL CODES, RULES, AND ORDINANCES.

9. PROVIDE MAIN CONDENSATE DRAIN AND AUXILLIARY DRAIN PAN (AUXILIARY DRAIN PAN SHALL BE EQUIPPED WITH A WATER-LEVEL DETECTION DEVICE THAT WILL SHUT OFF THE EQUIPMENT SERVED PRIOR TO OVERFLOW OF THE PAN AS PER FMC 2007 SECTION 307.2.3) FOR ALL AIR CONDITIONING UNITS AND DRAIN TO EXTERIOR PERMEABLE SOIL OR AS SHOWN ON THE PLANS.

10. AIR CONDITIONING CONDENSATE PIPING AND FITTINGS SHALL BE PVC OR DWV (ASTM-D2662). COPPER IN PLENUM AREAS. ALL INTERIOR CONDENSATE PIPING IN UNCONDITIONED SPACES SHALL BE WRAPPED WITH A MINIMUM 1/2" SELF SEALING INSULATING FOAM JACKET. THE CONTRACTOR SHALL PROVIDE ALL NECESSARY CONTROLS FOR THE OPERATION OF THE HVAC SYSTEM.

11. MAINTAIN 4" MINIMUM CLEARANCE AROUND ALL AIR HANDLING UNITS.

12. THERMOSTAT MUST BE PROGRAMMABLE TO BE ABLE TO SET THE TEMPERATURE BACK (OR OFF) WHEN SPACE IS UNOCCUPIED OR AT OTHER TIMES AS NEEDED BY USER.

13. ALL MATERIAL EXPOSED WITHIN PLENUM MUST BE NON COMBUSTIBLE OR RATED 25/50 FLAME SPREAD.

14. ALL AIR CONDITIONING AND VENTILATION DUCTS MUST CONFORM WITH SMACNA STANDARDS AND ALL LOCAL CODES. DUCT DROPS TO CEILINGS MAY BE INSULATED FLEXIBLE DUCT AS INDICATED ON THE HVAC PLAN. "FLEX" DUCTS SHALL BE FULLY EXTENDED AND OPEN. FIBERGLASS DUCT INSULATION VALUE SHALL BE MIN. R-6 IN ATTICS AND MIN. R-4.2 IN AIR CONDITIONED SPACE.

15. ALL VENTILATION DUCTWORK SHALL BE GALVANIZED SHEET METAL

16. DUCT SIZES SHOWN OR INDICATED ON DRAWINGS ARE INSIDE CLEAR DIMENSIONS.

17. HANGERS SHALL BE PROVIDED IN ACCORDANCE WITH S.M.A.C.N.A. RECOMMENDATIONS.

18. AIR DISTRIBUTION ACCESSORIES SHALL BE AIR GUIDE, ANEMOSTAT, TITUS, OR APPROVED EQUAL. ALL SUPPLY A.C. DUCT ELBOWS MUST BE FURNISHED WITH APPROVED TURNING VANES. BRANCH TAKEOFFS MUST BE PROPORTIONAL SPLITS.

19. THE OWNER SHALL APPROVE THE FINISH COLOR OF ALL EXPOSED AIR DISTRIBUTION DEVICES.

20. PROVIDE FIRE DAMPERS IN ALL DUCTS PASSING THROUGH FIRE DIVISION ASSEMBLIES. FIRE DAMPERS MUST HAVE FIRE RATING EQUAL TO OR GREATER THAN THE PENETRATED ASSEMBLY RATING. FIRE DAMPER INSTALLATIONS SHALL COMPLY WITH ALL LOCAL CODES. PROVIDE ACCESS PANEL TO ALL FIRE DAMPERS.

21. ELECTRIC STRIP HEATERS SHALL BE BLAST COIL TYPE WITH NICKEL CHROMIUM WIRE AND INSULATING BUSHINGS FACTORY MOUNTED AND WIRED INCLUDING ALL HEAT LIMITERS, HIGH LIMIT SWITCHES, AND CONTRACTORS IN ACCORDANCE WITH THE "NATIONAL ELECTRIC CODE".

22. EXHAUST FANS SHALL HAVE THE CAPACITIES AS STATED ON THE DRAWINGS AND BE PROVIDED WITH BACK DRAFT DAMPER, BIRD SCREEN.

23. THE CONTRACTOR SHALL GUARANTEE ALL MATERIALS AND WORKMANSHIP FREE FROM DEFECTS FOR A PERIOD NOT LESS THAN 1 YEAR FROM THE DATE OF ACCEPTANCE, UNLESS OTHERWISE NOTED. CORRECTION OF ANY DEFECTS SHALL BE COMPLETED WITHOUT ADDITIONAL CHARGE AND SHALL INCLUDE REPLACEMENTS OR REPAIRS OF ANY OTHER PHASE OF THE INSTALLATION WHICH MAY HAVE BEEN DAMAGED OR IS NOT OPERATING PROPERLY.

24. ARCHITECTURAL AND/OR ENGINEERING EXPENSES THAT ARE INCURRED DUE TO REVISIONS FOR SUBSTITUTIONS BY THE CONTRACTOR SHALL BE PAID FOR BY THE CONTRACTOR.

25. AIR DISTRIBUTION SYSTEM TESTING, ADJUSTING AND BALANCING. A WRITTEN BALANCE REPORT SHALL BE PROVIDED TO THE OWNER OR THE DESIGNATED REPRESENTATIVE OF THE BUILDING OWNER FOR HVAC SYSTEMS SERVING ZONES WITH A TOTAL CONDITIONED AREA EXCEEDING 5000 SQUARE FEET. AIR DISTRIBUTION SYSTEMS SHALL BE TESTED, ADJUSTED, AND BALANCED BY AN ENGINEER LICENSED IN THIS STATE OR A COMPANY OR INDIVIDUAL HOLDING A CURRENT CERTIFICATION FROM A RECOGNIZED TESTING AND BALANCING AGENCY ORGANIZATION IN ACCORDANCE WITH GENERALLY ACCEPTED ENGINEERING STANDARDS.
EXCEPTIONS:
1. BUILDINGS WITH COOLING OR HEATING SYSTEM CAPACITIES OF 15 TONS OR LESS PER SYSTEM MAY BE TESTED AND BALANCED BY A MECHANICAL CONTRACTOR LICENSED TO DESIGN AND INSTALL SUCH SYSTEM(S).
2. BUILDINGS WITH COOLING OR HEATING SYSTEM CAPACITIES OF 65,000 BTU/H OR LESS PER SYSTEM ARE EXEMPT FROM THE REQUIREMENTS OF THIS SECTION.
AIR SYSTEM BALANCING SHALL COMPLY WITH FBC 2010 ENERGY CONSERVATION SECTION 503.2.9.1

26. AS PER FBC 2010 ENERGY CONSERVATION SECTION 503.2.9.3, AN OPERATING AND MAINTENANCE MANUAL SHALL BE PROVIDED TO THE BUILDING OWNER BY THE MECHANICAL CONTRACTOR. THE MANUAL SHALL INCLUDE, AT LEAST, THE FOLLOWING:
1. EQUIPMENT CAPACITY (INPUT AND OUTPUT) AND REQUIRED MAINTENANCE ACTIONS.
2. EQUIPMENT OPERATION AND MAINTENANCE MANUALS.
3. HVAC SYSTEM CONTROL MAINTENANCE AND CALIBRATION INFORMATION, INCLUDING WIRING DIAGRAMS, SCHEMATICS, AND CONTROL SEQUENCE DESCRIPTIONS. DESIRED OR FIELD-DETERMINED SET POINTS SHALL BE PERMANENTLY RECORDED ON CONTROL DRAWINGS, AT CONTROL DEVICES OR, FOR DIGITAL CONTROL SYSTEMS, IN PROGRAMMING COMMENTS.
4. A COMPLETE WRITTEN NARRATIVE OF HOW EACH SYSTEM IS INTENDED TO OPERATE.

27. ALL PIPING SERVING AS PART OF A HEATING OR COOLING SYSTEM SHALL BE THERMALLY INSULATED IN ACCORDANCE WITH FBC 2010 ENERGY CONSERVATION TABLE 503.2.8.

28. IF THERE ARE ANY CHANGES IN ENGINEER'S DRAWINGS, IN DESIGN OR IN EQUIPMENT, WITHOUT ENGINEER'S CONSENT, THE A.C. CONTRACTOR SHALL ASSUME ALL RESPONSIBILITIES FOR THE PROJECT.

29. SMOKE DETECTORS ARE REQUIRED ON ALL PRIMARY AIR CONDITIONING SYSTEMS WHERE TOTAL AIR VOLUME EXCEEDS 2,000 C.F.M. (FBC-MECHANICAL 2010, SECTION 606.2.1) A DUCT ACCESS DOOR IS REQUIRED TO ACCESS THE DETECTOR. THE SYSTEM SHALL BE WIRED SO AS WHEN THE DUCT SMOKE DETECTOR DETECTS SMOKE, IT SHALL STOP THE AC SUPPLY FAN AND CAUSE A VISUAL AND AUDIBLE SIGNAL IN A NORMALLY OCCUPIED LOCATION. ALSO, THE DETECTOR SHALL INDICATE A TROUBLE CONDITION EITHER VISUALLY OR AUDIBLY IN THE NORMALLY OCCUPIED LOCATION, AND BE IDENTIFIED AS AIR DUCT DETECTOR TROUBLE. NFPA 90A, 4-4.4.3
(THE TESTER SHOULD BE EQUIPPED WITH AN LED LIGHT TO INDICATE TROUBLE).

29. AS PER FBC 2010 ENERGY CONSERVATION SECTION 503.2.5.4 (SHUTOFF DAMPER CONTROLS)
PROVIDE MOTORIZED DAMPERS FOR O/A INTAKE FOR AHU. CONNECT MOTORIZED DAMPER TO TIME CLOCK TO CLOSE OUTSIDE AIR INTAKE AUTOMATICALLY WHEN THE SPACE SERVED IS NOT IN USE (OFF BUSINESS HOURS).

30. GRAVITY HOODS, VENTS, AND VENTILATORS. ALL OUTDOOR AIR SUPPLY AND EXHAUST HOODS, VENTS, AND VENTILATORS SHALL BE EQUIPPED WITH DAMPERS THAT WILL AUTOMATICALLY SHUT WHEN THE SPACES SERVED ARE NOT IN USE.
EXCEPTION: VENTILATION SYSTEMS SERVING UNCONDITIONED SPACES.

31. MINIMUM DUCT INSULATION R-VALUES, HEATING AND COOLING SUPPLY AND RETURN DUCTS SHALL BE PER FBC 2010 ENERGY CONSERVATION TABLE 503.2.7.1

32. AS PER FBC-301.4 ALL APPLIANCES REGULATED BY THIS CODE SHALL BE LISTED AND LABELED UNLESS OTHERWISE APPROVED IN ACCORDANCE WITH SECTIONS 301.4.1 THROUGH 301.4.4.

33. AS PER FMC-304.10 GUARDS SHALL BE PROVIDED WHERE APPLIANCES, EQUIPMENT, FANS OR OTHER COMPONENTS THAT REQUIRE SERVICE AND ROOF HATCH OPENINGS ARE LOCATED WITHIN 10 FT. OF ROOF EDGE OR OPEN SIDE OF A WALKING SURFACE AND SUCH EDGE OR OPEN SIDE IS LOCATED MORE THAN 30" ABOVE THE FLOOR, ROOF OR GRADE BELOW.

34. AS PER 306.5.1 SLOPED ROOFS. WHERE APPLIANCES, EQUIPMENT, FANS OR OTHER COMPONENTS THAT REQUIRE SERVICE ARE INSTALLED ON A ROOF HAVING A SLOPE OF THREE UNITS VERTICAL IN 12 UNITS HORIZONTAL OR GREATER AND HAVING AN EDGE MORE THAN 30" ABOVE GRADE AT SUCH EDGE A LEVEL PLATFORM SHALL BE PROVIDED ON EACH SIDE OF THE APPLIANCE TO WHICH ACCESS IS REQUIRED FOR SERVICE, REPAIR OR MAINTENANCE. THE PLATFORM SHALL BE NOT LESS THAN 30" IN ANY DIMENSION AND SHALL BE PROVIDED WITH GUARDS. THE GUARDS SHALL EXTEND NOT LESS THAN 42"ABOVE THE PATFORM, SHALL BE CONSTRUCTED SO AS TO PREVENT THE PASSAGE OF A 21" DIAMETER SPHERE AND SHALL COMPLY WITH THE LOADING REQUIREMENTS FOR GUARDS SPECIFIED IN THE FBC.

35. ANY INTAKE OPENINGS SHALL BE LOCATED A MINIMUM OF 10 FT. FROM ANY HAZARDOUS OR NOXIOUS CONTAMINANT SOURCE.

36. ALL COOKING APPLIANCES THAT ARE DESIGNED FOR PERMANENT INSTALLATION SHALL BE LISTED , LABELED AND INSTALLED IN ACCORDANCE WITH THE MANUFACTURER'S INSTALLATION INSTRUCTION.

37. ROOF MOUNTED MECHANICAL UNITS SHALL BE MOUNTED ON CURBS RAISED A MINIMUM OF 8 INCHES (203 MM) ABOVE THE ROOF SURFACE, OR WHERE ROOFING MATERIALS EXTEND BENEATH THE UNIT, ON RAISED EQUIPMENT SUPPORTS PROVIDING A MINIMUM CLEARANCE HEIGHT IN ACCORDANCE WITH TABLE 1509.7.
TABLE 1509.7 CLEARANCE BELOW RAISED ROOF MOUNTED MECHANICAL UNITS

WIDTH OF MECHANICAL UNIT (INCHES)				
SURFACES (INCHES)				
< 24	/ 24 < 36	/ 36 < 48	/ 48 < 60	/ > 60
14"	18"	24"	30"	48"

38. ROOF TOP A/C UNIT CURB SHALL BE MINIMUM 14 GAUGE (HURRICANE RATED CURB).

39. THE CONTRACTOR SHALL FIELD VERIFY ALL EXISTING CONDITIONS AND INFORM THE PROJECT ENGINEER AND ARCHITECT OF ANY DISCREPANCY BETWEEN THESE PLANS AND THE EXISTING CONDITIONS. THE CONTRACTOR SHALL INCLUDE IN HIS BID TO CORRECT SUCH CONDITION AS DIRECTED. THE ENGINEER AND ARCHITECT ARE NOT RESPONSIBLE FOR ANY ADDITIONAL COSTS RESULTING FROM VERIFIABLE EXISTING CONDITIONS DISCOVERED AFTER CONTRACT HAS BEEN AWARDED.

NOTES:
1. METALLIC FLEXIBLE DUCTWORK SHALL BE ATTACHED USING A MINIMUM OF THREE #8 SHEET METAL SCREWS EQUALLY SPACED AROUND THE DUCTWORK CIRCUMFERENCE. DUCTWORK LARGER THAN 12" SHALL HAVE A MINIMUM OF FIVE #8 SHEET METAL SCREWS. SCREWS SHALL BE LOCATED AT LEAST 8" FROM THE DUCTWORK END.
2. NON-METALLIC FLEXIBLE DUCTWORK SHALL BE SECURED TO THE SLEEVE OR COLLAR USING A DRAW BAND. IF THE DUCTWORK COLLAR EXCEEDS 12", THE DRAW BAND MUST BE POSITIONED BEHIND A BEAD ON THE METAL COLLAR.
3. INSULATION AND VAPOR BARRIERS PRESENT ON FACTORY-FABRICATED DUCTWORK SHALL BE FITTED OVER THE CORE CONNECTION AND SHALL BE SUPPLEMENTALLY SECURED WITH A DRAW BAND.
4. FLEXIBLE DUCTWORK SEALING SHALL BE A CLASS "B" SEAL FOR LOW PRESSURE DUCTWORK.
5. SUPPORT SYSTEM SHALL NOT DAMAGE OR CAUSE OUT-OF-ROUND SHAPE.

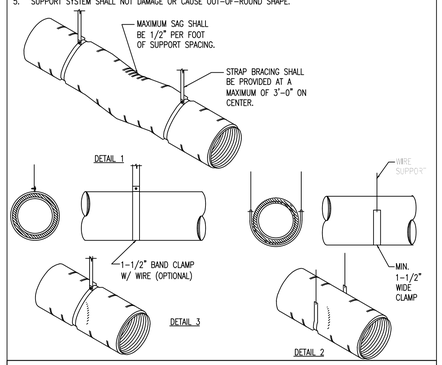

INSULATED FLEXIBLE DUCTWORK DETAIL
NTSC

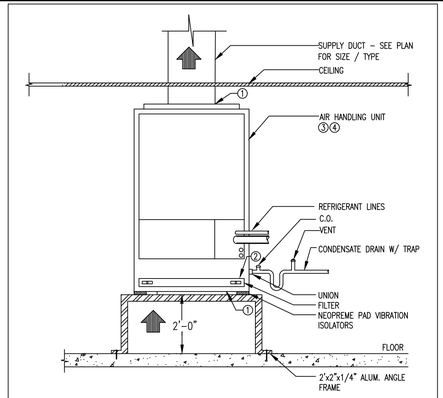

NOTES:
1. AHU SHALL BE MECHANICALLY ATTACHED TO SUPPLY AIR PLENUM. ALL JOINTS BETWEEN SECTIONS OF AIR DUCTS & PLENUMS, BETWEEN INTERMEDIATE & TERMINAL FITTINGS & OTHER COMPONENTS OF AIR DISTRIBUTION SYSTEM, & BETWEEN SUBSECTIONS OF THESE COMPONENTS SHALL BE MECHANICALLY FASTENED TO SECURE SECTIONS INDEPENDENTLY OF THE CLOSRE SYSTEM.

2. PROVIDE A WATER LEVEL MONITORING DEVICE (SHUT-OFF FLOW SWITCH) INSTALLED IN THE PRIMARY PAN. THIS DEVICE WILL SHUT OFF THE EQUIPMENT WHEN THE PRIMARY PAN DRAIN FLOW IS RESTRICTED

3. AHU TO HAVE 4" MINIMUM CLEARANCE ALL AROUND THE UNIT.

4. SEE SCHEDULE FOR MANUFACTURER, PART NO., ETC.

AHU - OFFICE MOUNTING DETAIL
NTSC

V:1 061211

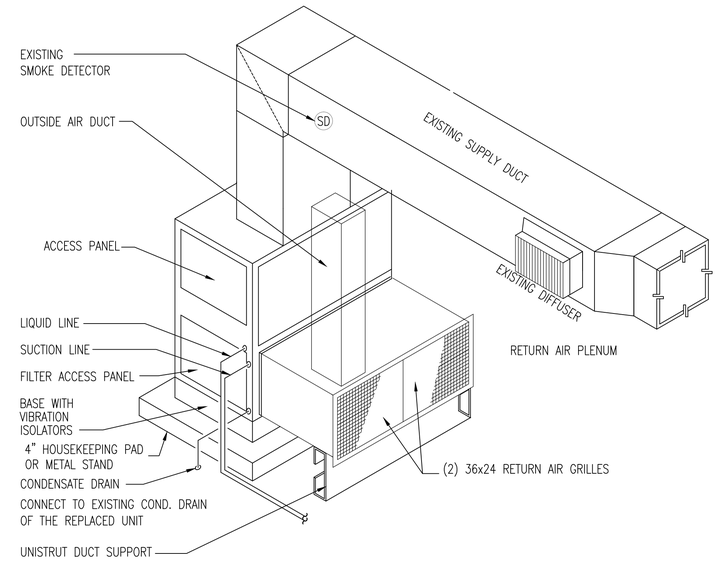

AHU - BASEMENT MOUNTING DETAIL
NTSC

V:1 061211

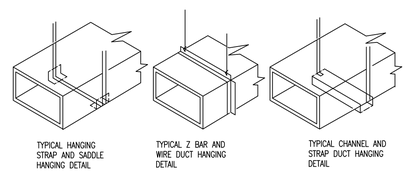

NOTES:
1. HANG DUCTS ACCORDING TO SMACNA STANDARDS
2. ALL STRAP SHALL BE A MINIMUM OF 1-1/2,26 GA GALVINIZED STEEL. WITH A 6 FT MAXIMUM SPACING.

METHODS OF HANGING DUCTS
NTSC

INSTALL NEW ACCU-OFFICE PER MIAMI DADE APPROVED NOA# 12-0612.29. (SUBMITTED WITH PLANS AND AVAILABLE ON MIAMI DADE NOA PORTAL WEB SITE)

ACCU - OFFICE MOUNTING DETAIL
NTSC

V:1 061211

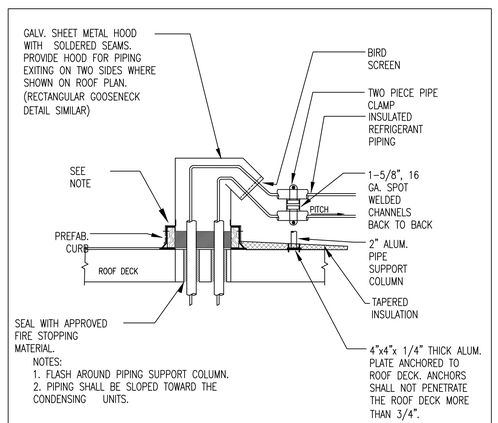

NOTES:
1. FLASH AROUND PIPING SUPPORT COLUMN.
2. PIPING SHALL BE SLOPED TOWARD THE CONDENSING UNITS.

REFRIGERANT PIPING ROOF CAP DETAIL
NTSC

V:1 061211

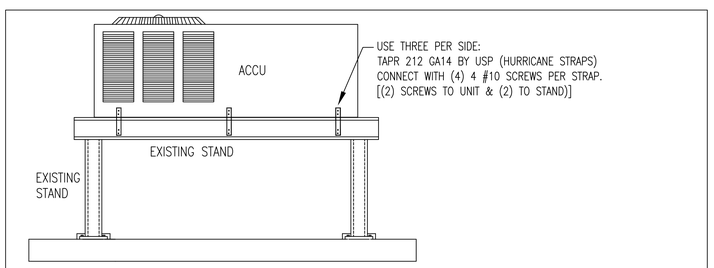

ACCU-BASEMENT MOUNTING DETAIL TO EXISTING STAND
NTSC

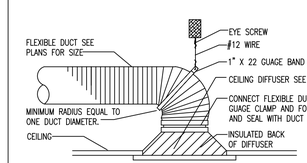

TYPICAL DIFFUSER DETAIL
NTSC

V:1 061026

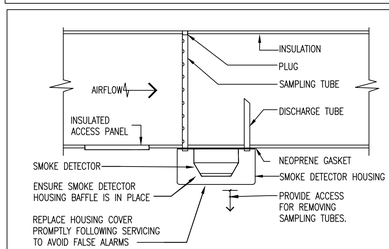

NOTES:
1. PER FMC 606.2.1 DUCT SMOKE DETECTOR TO BE INSTALLED IN SUPPLY DUCT.
2. INSTALL IN STRICT ACCORDANCE WITH MANUFACTURER'S INSTALLATION INSTRUCTION.
3. COORDINATE VOLTAGE AND TYPE WITH ELECTRICAL AND FIRE ALARM CONTRACTORS.
4. SAMPLING TUBE MUST BE INSTALLED ACROSS GREATEST DUCT DIMENSION.
5. OPERATION: WHEN THE DUCT SMOKE DETECTOR DETECTS SMOKE, IT SHALL STOP THE RTU/AHU SUPPLY FAN AND CAUSE A VISUAL AND AUDIBLE SIGNAL IN A NORMALLY OCCUPIED AREA. IN ADDITION TO THE ALARM SIGNAL, THE DETECTOR SHALL INDICATE A TROUBLE CONDITION EITHER VISUALLY OR AUDIBLY IN THE NORMALLY OCCUPIED AREA, AND BE IDENTIFIED AS AIR DUCT DETECTOR TROUBLE. 9NFPA 90A, 4-4.4.3 (THE TESTER PROVIDED IS EQUIPPED WITH LED LIGHTS TO INDICATE TROUBLE)

Wind Load Equipment Attachment Using ASCE-7-10 .

Step 1	Risk Category:	II		(ASCE Table 1.5-1)
Step 2	Basic Wind Speed V =	170	mph	(ASCE fig. 26.5 1A)
Step 3				
	Wind Directionality Factor Kd =	0.9		(ASCE Table 26.6-1, equipment with square section)
	Exposure Category:	C		(The Bldg has exposure C in all direction)
	Topographic Factor Kzt =	1.0		(ASCE Sect. 26.8, flat terrain surrounding the bldg)
	Gust effect Factor G:	NA		(GCr values are given in ASCE Sect. 29.5.1)
Step 4	Velocity Pressure Exposure Coefficient Kz =	0.9		(ASCE table 29.3-1, for z = h = 20 ft and exposure C)
Step 5	Velocity Pressure qz =	59.93	psf	(ASCE Sect. 29.3.2)
	(qz = 0.00256 x Kz x Kzt x Kd x V^2)			
Step 6	Force Coefficient Cf	NA		(Not Applicable)

Step 7
ACCU

DIMENSIONS(LxWxH)(inch)	41	53	44	WEIGHT (lb) =	440
Af : (Area of projection normal to wind direction)	17.71 ft sq <	0.1Bh:			*(ASCE Sect. 29.5.1 eq 29.5-2)*
Ar: (Equipment horizontal Area Projected Area)	15.09 ft sq <	0.1BL:			*(ASCE Sect. 29.5.1 eq 29.5-3)*
Hf: (Height of force from overturning point) =	1.83 ft				
Lateral Force: Fh = qz x 1.9 x Af =	**2017.0 lb**	Sheer Force			

UNIT TO EXISTING STAND ATTACHMENT:

Number of screws used per long side (4-1/2 LONG, #10 SHEET METAL SCREWS - 12 gauge) =		**6**
Number of screws used per long side (4-1/2 LONG, #10 SHEET METAL SCREWS - 12 gauge) =		**6**
Total number of screws used	=	**24**

SHEER (breaking all screws and sliding unit horizontally)

sheer per screw = sheer force / number of screws	**2017.0**	/	24	=	**84**	**lbs**
Sheer capacity per screw				=	**558**	**lbs** acceptable

TENSION (overturning of unit along long side by pulling screws on the other long side and short sides)

Uplift Force: Fv = qz x 1.5 x Ar =	**1356.5 lb**			
OVER TURNING MOMENT = Fh x 1.5 x Hf =	**5546.7 ft lbs**			
RESISTING MOMENT = (weight) X width/2) =	**971.7 ft lbs**			
RESULTING MOMENT = OVERTURNING M. - RESISTING M. =	**4575.0 ft lbs**	Tension Force		
ANCHORING FORCE REQUIRED = RESULTING MOMENT /WIDTH OF UNIT	=	**1036 lbs**		
Tension per screw = Tension force / number of screws per long side and 2-short sides		=	**57.5**	**lbs**
Tension capacity per screw		=	**263**	**lbs** acceptable
Test : calculated tension per screw / screw tension capacity + calculated shear per screw/ screw sheer capacity=				**must be less than 1**
0.37	<	1	acceptable	

S&D Engineering and Construction, Inc
3107 N.W. 71st. Ave.
Margate, Florida 33063
QB# 52647 COA# 28388
Tel: (954) 775-0143
Fax: (754) 229-8401

CITY OF NORTH MIAMI CITY HALL
776 N.E. 125 ST., NORTH MIAMI, FL., 33181

Seal

KAMAL HALABI
PE# 63970

Date: 06/12/13
Drawn: KH
Revised:
Revision:

Job No.
12023E

Drawing No.
M-3