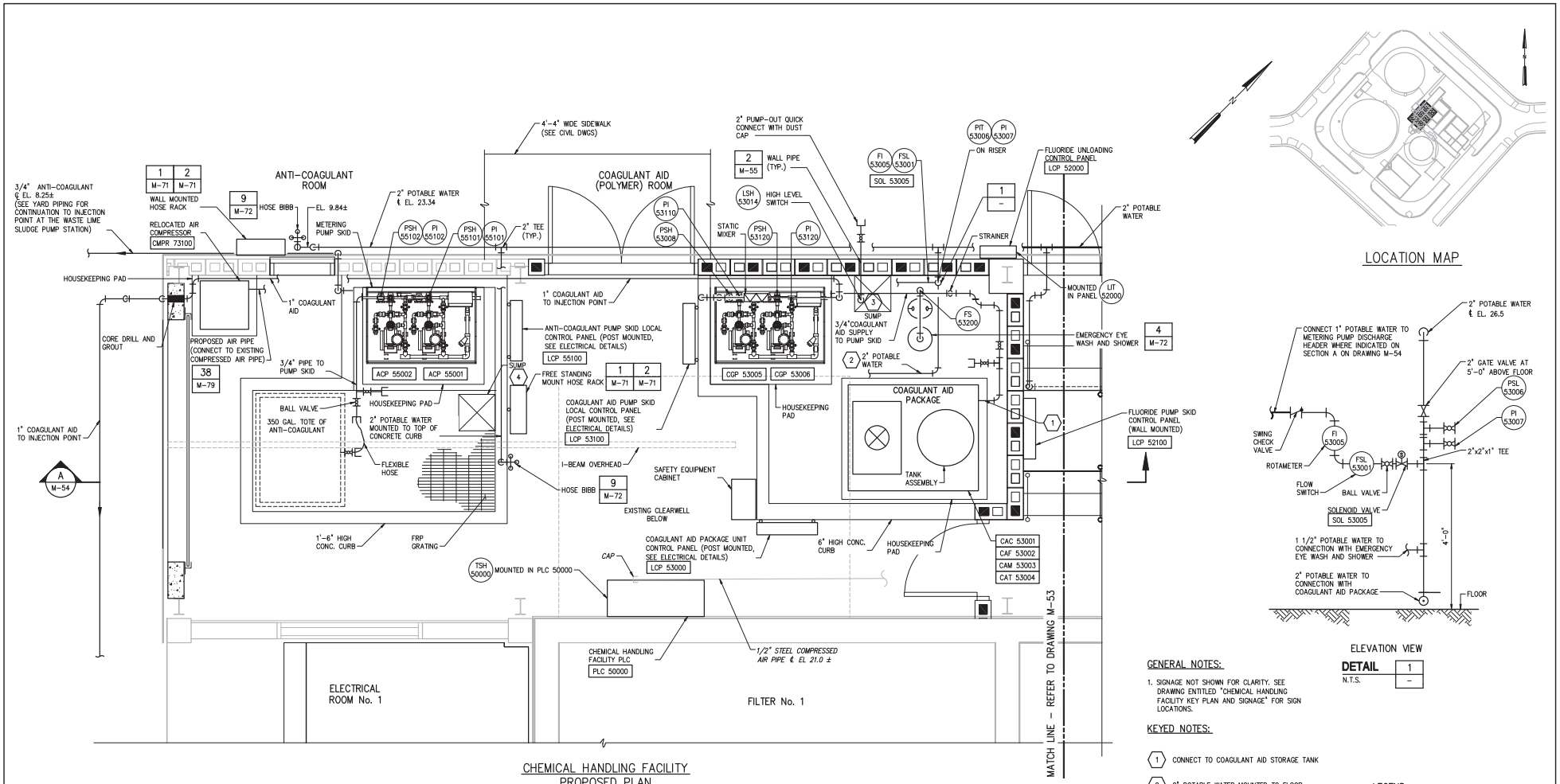


CHEMICAL HANDLING FACILITY
PROPOSED PLAN
1/2"=1'-0"



LOCATION MAP




ELEVATION VIEW

**DETAIL** 1
N.T.S.

## GENERAL NOTES:

1. SIGNAGE NOT SHOWN FOR CLARITY. SEE DRAWING ENTITLED "CHEMICAL HANDLING FACILITY KEY PLAN AND SIGNAGE" FOR SIGN LOCATIONS.

## KEYED NOTES:

1. CONNECT TO COAGULANT AID STORAGE TANK
2. 2" POTABLE WATER MOUNTED TO FLOOR. CONNECT 2" POTABLE WATER TO COAGULANT AID PACKAGE SYSTEM WHERE REQUIRED. PROVIDE ALL NEED PIPING, FITTINGS, ACCESSORIES AND SUPPORTS FOR A COMPLETE AND OPERABLE SYSTEM.
3. THE RISER PIPE FOR THE PUMP OUT CONNECTION SHALL BE MOUNTED TO THE WALL AND SHALL TERMINATE 6-INCHES ABOVE THE FLOOR OF THE CHEMICAL ROOM. TERMINATION SHALL BE THREADED TO FACILITATE CONNECTION WITH PORTABLE SUMP PUMP.
4. PROVIDE 18"x18" REMOVABLE GRATING PANEL AT SUMP.

## LEGEND:

*EXISTING*
PROPOSED

1/2"=1'-0"

| NO. | DATE | ISSUED FOR | BY |
|---|---|---|---|

DESIGNED G.A.B.
DRAWN G.P.B.
CHECKED G.N.C.
PROJ. ENGR. G.A.B.

H. J. VIDAL P.E.
No. 37882

**HAZEN AND SAWYER**
Environmental Engineers & Scientists
4000 Hollywood Boulevard, Suite 750N
Hollywood, Florida 33021
Certificate of Authorization Number: 2771

SCALE: AS NOTED

CLIENTS PROJECT: –
ENGINEERS PROJECT: 44238-004
CAD REFERENCE: 44238-004BP3-M52

NORTH MIAMI FLORIDA
**CITY OF NORTH MIAMI**
**PUBLIC WORKS UTILITIES**

WINSON WATER TREATMENT PLANT
BID PACKAGE 3: WTP REHABILITATION

CHEMICAL HANDLING FACILITY
ANTI-COAGULANT AND COAGULANT AID

DATE: JUNE 2014
SHEET: 113 OF 335
DRAWING: M-52

PERMITTING

PLOT DATE: 6/10/2014 4:40 PM BY: HS

XREFs= ..\Titleck\44238-004-BP3-TB,..\Base-BP3\S-BP3-ChemHand-Plan,..\Base-BP3\M-BP3-ChemHand-Plan,..\Base-BP3\M-BP1-Filters-Plan-Bottom-X

File = H:\44238-004\Drawings\Bid Package 3 - WTP Rehab\Mech\44238-004BP3-M52 Saved by HScalf Save date = 6/9/2014 6:37 PM

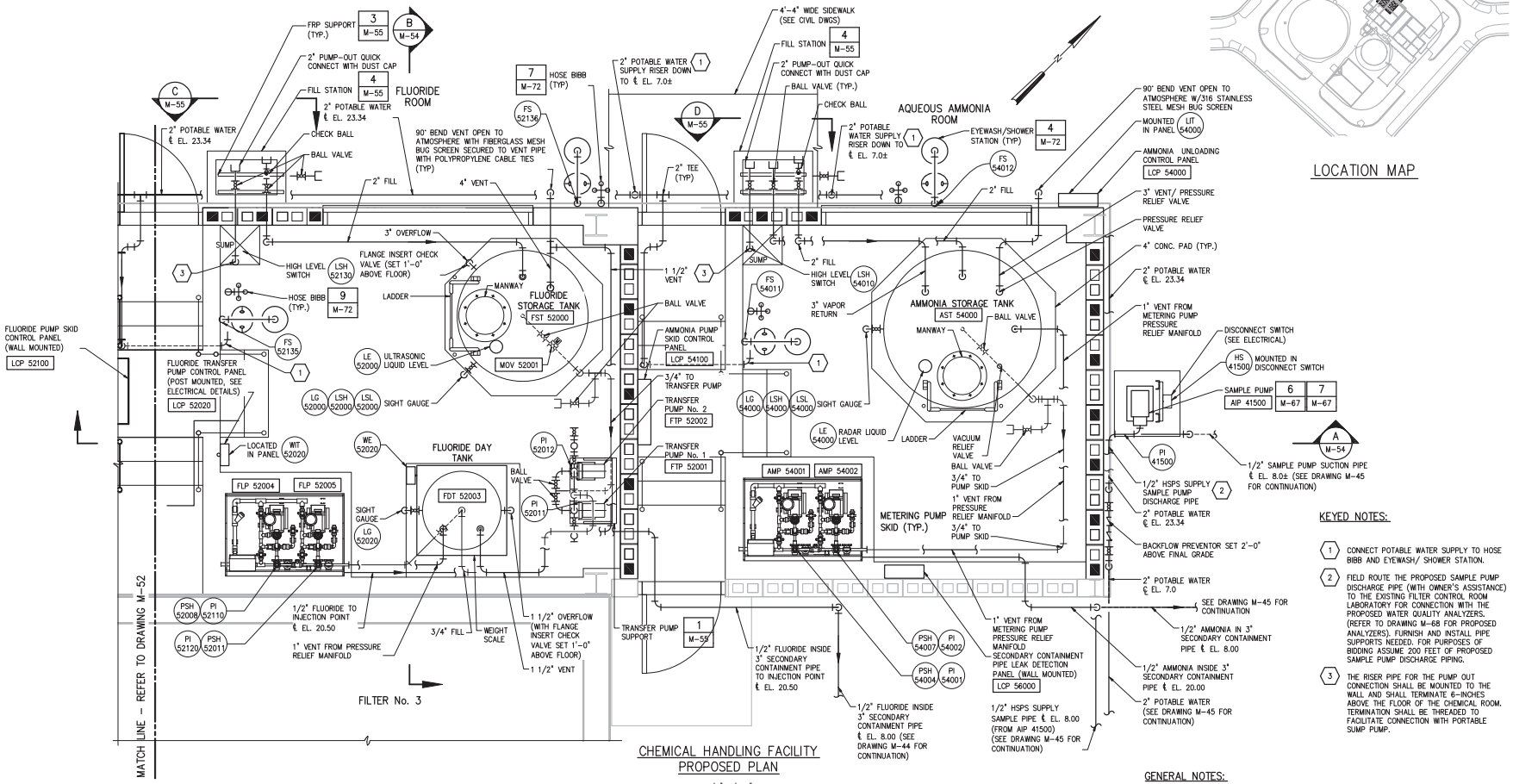


## KEYED NOTES:

1. CONNECT POTABLE WATER SUPPLY TO HOSE BIBB AND EYEWASH/ SHOWER STATION.
2. FIELD ROUTE THE PROPOSED SAMPLE PUMP DISCHARGE PIPE (WITH OWNER'S ASSISTANCE) TO THE EXISTING FILTER CONTROL ROOM LABORATORY FOR CONNECTION WITH THE PROPOSED WATER QUALITY ANALYZERS. (REFER TO DRAWING M-68 FOR PROPOSED ANALYZERS). FURNISH AND INSTALL PIPE SUPPORTS NEEDED. FOR PURPOSES OF BIDDING ASSUME 200 FEET OF PROPOSED SAMPLE PUMP DISCHARGE PIPING.
3. THE RISER PIPE FOR THE PUMP OUT CONNECTION SHALL BE MOUNTED TO THE WALL AND SHALL TERMINATE 6–INCHES ABOVE THE FLOOR OF THE CHEMICAL ROOM. TERMINATION SHALL BE THREADED TO FACILITATE CONNECTION WITH PORTABLE SUMP PUMP.

## GENERAL NOTES:

1. SIGNAGE NOT SHOWN FOR CLARITY. SEE DRAWING ENTITLED "CHEMICAL HANDLING FACILITY KEY PLAN AND SIGNAGE" FOR SIGN LOCATIONS.

## LEGEND:

*EXISTING*

PROPOSED

1/2"=1'-0"  12" 0 1 3'

| NO. | DATE | ISSUED FOR | BY |
|---|---|---|---|
| 1 | 4/1/14 | 100% QA COMMENTS | H.J.V. |

PLOT DATE: 6/10/2014 4:46 PM BY: HS

DESIGNED G.A.B.
DRAWN G.P.B.
CHECKED G.N.C.
PROJ. ENGR. G.A.B.

H. J. VIDAL P.E.
No. 37882

HAZEN AND SAWYER
Environmental Engineers & Scientists
4000 Hollywood Boulevard, Suite 750N
Hollywood, Florida 33021
Certificate of Authorization Number: 2771

SCALE 1/2"=1'-0"

CLIENTS PROJECT: –
ENGINEERS PROJECT: 44238-004
CAD REFERENCE: 44238-004BP3-M53

NORTH MIAMI FLORIDA
CITY OF NORTH MIAMI
PUBLIC WORKS UTILITIES

WINSON WATER TREATMENT PLANT
BID PACKAGE 3: WTP REHABILITATION
CHEMICAL HANDLING FACILITY
FLUORIDE AND AQUEOUS AMMONIA

DATE: JUNE 2014
SHEET: 114 OF 335
DRAWING: M-53

PERMITTING

XREFs= ..\Tblock\44238-004-BP3-TB,..\Base-BP3\S-BP3-ChemHand-Plan,..\Base-BP3\S-BP1-Filters-Plan-Bottom-X,..\Base-BP3\M-BP3-ChemHand-Plan

File = H:\44238-004\Drawings\Bid Package 3 - WTP Rehab\Mech\44238-004BP3-M53 Saved by HsCad2 Save date = 6/9/2014 6:10 PM

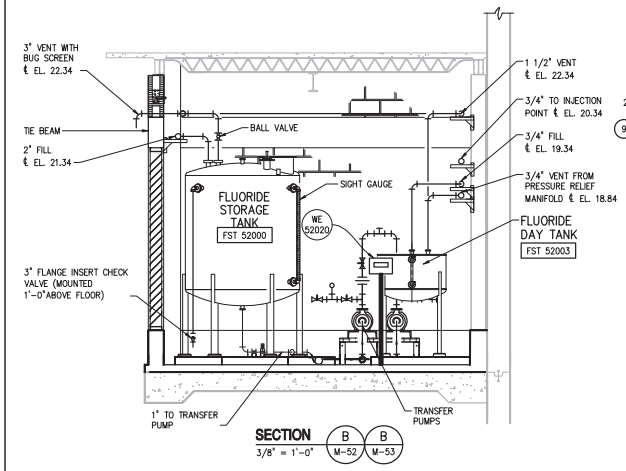


SECTION B/M-52 B/M-53
3/8" = 1'-0"

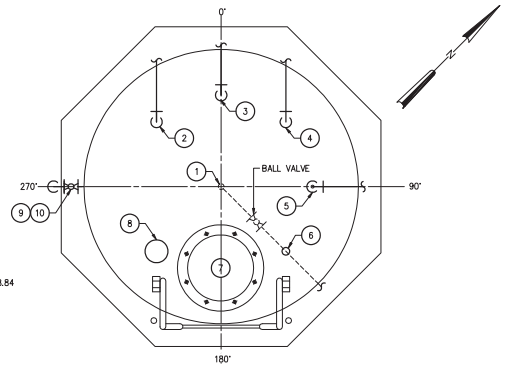


| TANK OUTLET SCHEDULE AMMONIA STORAGE TANK | | | |
|---|---|---|---|
| MARK | OUTLET NOMINAL DIAMETER | RADIUS | SERVICE |
| 1 | 3/4" | CENTER OF TANK | OULET TO METERING PUMP SKID |
| 2 | 3" | 2'-0" | VAPOR RETURN |
| 3 | 2" | 2'-0" | TANK FILL |
| 4 | AS REQUIRED TO SUIT THE PRESSURE RELIEF VALVE | 2'-0" | PRESSURE VALVE |
| 5 | 1" | 2'-0" | VENT LINE FROM METERING PUMP PRESSURE RELIEF MANIFOLD |
| 6 | AS REQUIRED TO SUIT THE VACCUM RELIEF VALVE | 2'-0" | VACUUM RELIEF VALVE |
| 7 | 24" | 1'-10" | MANWAY |
| 8 | AS REQUIRED TO SUIT INSTRUMENT | 2'-0" | RADAR LIQUID LEVEL INSTRUMENT |
| 9 | 2" (COORDINATE WITH SIGHT GAUGE) | NOT APPLICABLE | OUTLET FOR SIGHT GAUGE |
| 10 | 2" (COORDINATE WITH SIGHT GAUGE) | NOT APPLICABLE | OUTLET FOR SIGHT GAUGE |

AMMONIA STORAGE TANK OUTLET PLAN
NTS

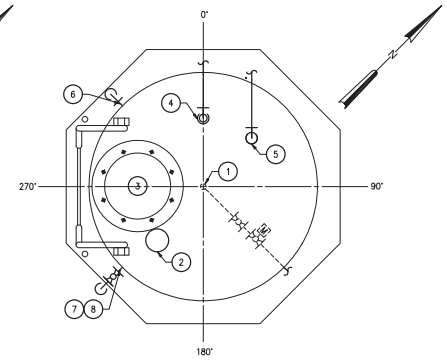


| TANK OUTLET SCHEDULE FLUORIDE STORAGE TANK | | | |
|---|---|---|---|
| MARK | OUTLET NOMINAL DIAMETER | RADIUS | SERVICE |
| 1 | 1" | CENTER OF TANK | OULET TO TRANSFER PUMPS |
| 2 | AS REQUIRED TO SUIT INSTRUMENT | 1'-6" | ULTRASONIC LIQUID LEVEL INSTRUMENT |
| 3 | 24" | AS REQUIRED | MANWAY |
| 4 | 2" | 1'-6" | TANK FILL |
| 5 | 4" | 1'-6" | VENT |
| 6 | 3" | NOT APPLICABLE | OVERFLOW |
| 7 | 2" (COORDINATE WITH SIGHT GAUGE) | NOT APPLICABLE | OUTLET FOR SIGHT GAUGE |
| 8 | 2" (COORDINATE WITH SIGHT GAUGE) | NOT APPLICABLE | OUTLET FOR SIGHT GAUGE |

FLUORIDE STORAGE TANK OUTLET PLAN
NTS

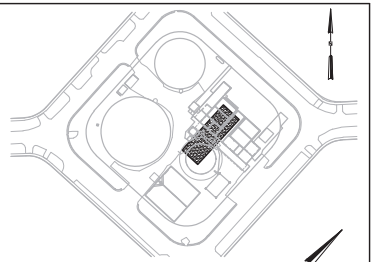

LOCATION MAP

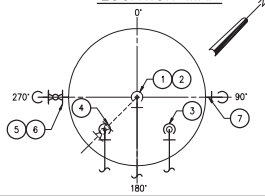


| TANK OUTLET SCHEDULE FLUORIDE DAY TANK | | | |
|---|---|---|---|
| MARK | OUTLET NOMINAL DIAMETER | RADIUS | SERVICE |
| 1 | 3/4" | CENTER OF TANK | TANK FILL |
| 2 | 3/4" | CENTER OF TANK | OULET TO METERING PUMP SKID |
| 3 | 1.5" | 1'-0" | VENT |
| 4 | 1" | 1'-0" | VENT LINE FROM METERING PUMP PRESSURE RELIEF MANIFOLD |
| 5 | 2" (COORDINATE WITH SIGHT GAUGE) | NOT APPLICABLE | OUTLET FOR SIGHT GAUGE |
| 6 | 2" (COORDINATE WITH SIGHT GAUGE) | NOT APPLICABLE | OUTLET FOR SIGHT GAUGE |

FLOURIDE DAY TANK OUTLET PLAN
NTS

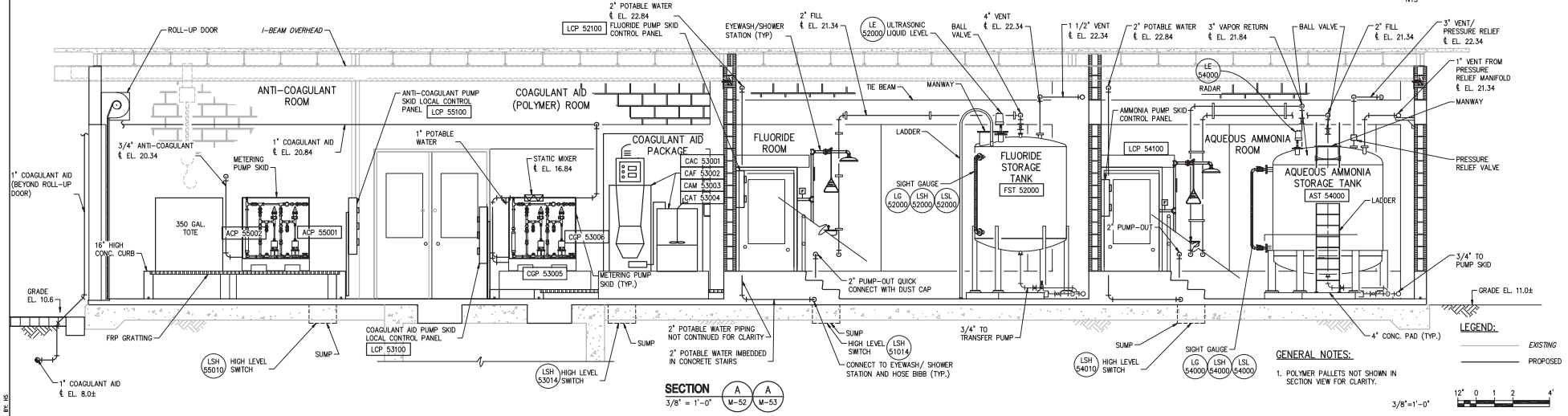


SECTION A/M-52 A/M-53
3/8" = 1'-0"

| NO. | DATE | ISSUED FOR | BY |
|---|---|---|---|
| 1 | 4/1/14 | 100% QA COMMENTS | H.J.V. |

PLOT DATE: 6/10/2014 4:54 PM BY: HS

DESIGNED G.A.B.
DRAWN G.P.B.
CHECKED G.N.C.
PROJ. ENGR. G.A.B.

H. J. VIDAL P.E.
No. 37882

HAZEN AND SAWYER
Environmental Engineers & Scientists
4000 Hollywood Boulevard, Suite 750N
Hollywood, Florida 33021
Certificate of Authorization Number: 2771

SCALE 3/8"=1'-0"

CLIENTS PROJECT: –
ENGINEERS PROJECT: 44238-004
CAD REFERENCE: 44238-004BP3-M54

NORTH MIAMI FLORIDA
CITY OF NORTH MIAMI
PUBLIC WORKS UTILITIES

WINSON WATER TREATMENT PLANT
BID PACKAGE 3: WTP REHABILITATION
CHEMICAL HANDLING FACILITY SECTIONS

DATE: JUNE 2014
SHEET: 115 OF 335
DRAWING: M-54

PERMITTING

File = H:\44238-004\Drawings\Bid Package 3 - WTP Rehab\Mech\44238-004BP3-M54 Saved by HsCol2 Save date = 6/9/2014 7:51 PM

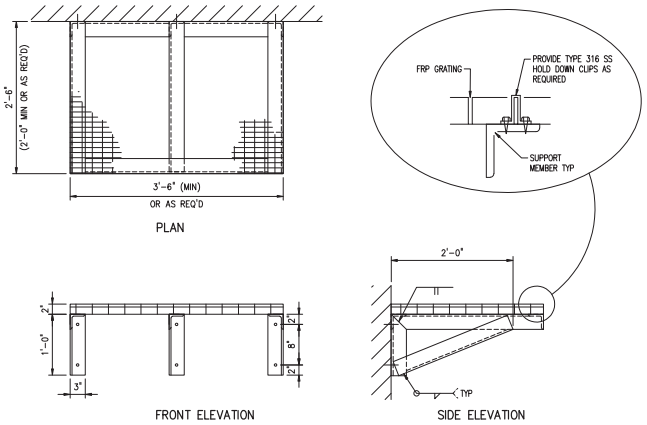


TRANSFER PUMP SUPPORT

**DETAIL** 1 (M-53)
1" = 1'-0"

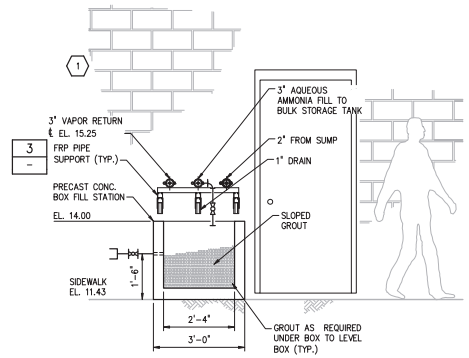


**SECTION** C (M-51)
1/2" = 1'-0"

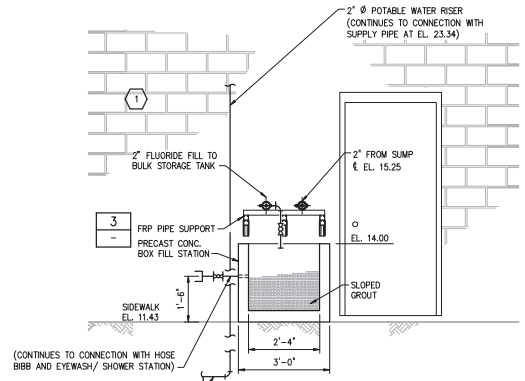


**SECTION** D (M-51)
1/2" = 1'-0"

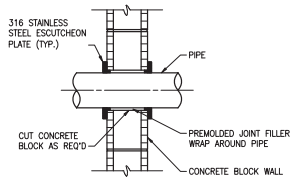


WALL PIPE

**DETAIL** 2 (M-52)
NTS

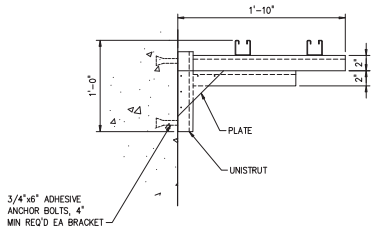


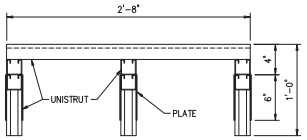


FRP SUPPORT BRACKET

**DETAIL** 3 (M-53)
NTS

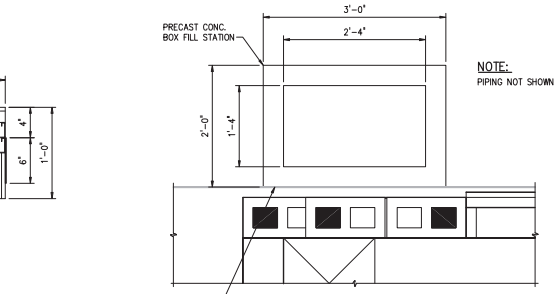


NOTE:
PIPING NOT SHOWN FOR CLARITY.

FILL STATION PLAN

**DETAIL** 4 (M-55)
NTS

KEYED NOTES:

1. LOUVER NOT SHOWN FOR CLARITY.

1"=1'-0" 12" 6 0 1'

1/2"=1'-0" 12" 0 1 3'

PERMITTING

| NO. | DATE | ISSUED FOR | BY |
|---|---|---|---|

DESIGNED G.A.B.
DRAWN G.P.B.
CHECKED J.N.M.
PROJ. ENGR. G.A.B.

H. J. VIDAL P.E.
No. 37882

**HAZEN AND SAWYER**
Environmental Engineers & Scientists
4000 Hollywood Boulevard, Suite 750N
Hollywood, Florida 33021
Certificate of Authorization Number: 2771

SCALE: AS NOTED

CLIENTS PROJECT: –
ENGINEERS PROJECT: 44238-004
CAD REFERENCE: 44238-004BP3-M55

NORTH MIAMI FLORIDA
CITY OF NORTH MIAMI
PUBLIC WORKS UTILITIES

WINSON WATER TREATMENT PLANT
BID PACKAGE 3: WTP REHABILITATION
CHEMICAL HANDLING FACILITY
SECTIONS AND DETAILS

DATE: JUNE 2014
SHEET: 116 OF 335
DRAWING: M-55

PLOT DATE: 6/10/2014 4:37 PM BY: HS

XREFs= ..\Tblock\44238-004-BP3-TB,..\Base-BP3\M-BP3-ChemHand-Sections,..\Base-BP3\S-BP3-ChemHand-Plan

File = H:\44238-004\Drawings\Bid Package 3 - WTP Rehab\Mech\44238-004BP3-M55 Saved by HsCad2 Save date = 6/9/2014 8:22 PM

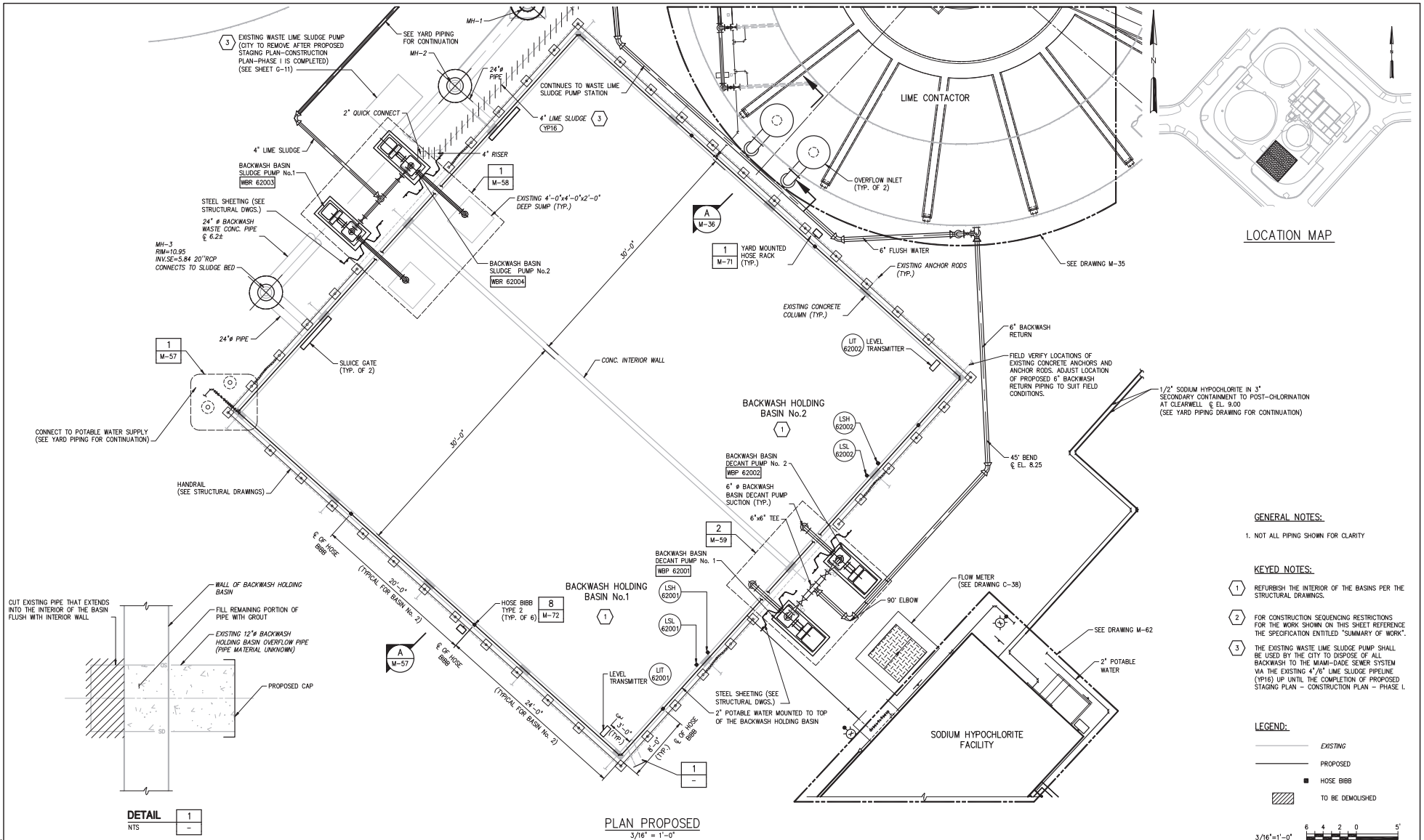





**DETAIL** 1 / –
NTS

PLAN PROPOSED
3/16" = 1'-0"

GENERAL NOTES:

1. NOT ALL PIPING SHOWN FOR CLARITY

KEYED NOTES:

1. REFURBISH THE INTERIOR OF THE BASINS PER THE STRUCTURAL DRAWINGS.
2. FOR CONSTRUCTION SEQUENCING RESTRICTIONS FOR THE WORK SHOWN ON THIS SHEET REFERENCE THE SPECIFICATION ENTITLED "SUMMARY OF WORK".
3. THE EXISTING WASTE LIME SLUDGE PUMP SHALL BE USED BY THE CITY TO DISPOSE OF ALL BACKWASH TO THE MIAMI-DADE SEWER SYSTEM VIA THE EXISTING 4"/6" LIME SLUDGE PIPELINE (YP16) UP UNTIL THE COMPLETION OF PROPOSED STAGING PLAN – CONSTRUCTION PLAN – PHASE I.

LEGEND:

- EXISTING
- PROPOSED
- HOSE BIBB
- TO BE DEMOLISHED

3/16"=1'-0" 6 4 2 0 5'

| NO. | DATE | ISSUED FOR | BY |
|---|---|---|---|
| 1 | 4/1/14 | 100% QA COMMENTS | H.J.V. |

PLOT DATE: 6/10/2014 5:01 PM BY: HS

DESIGNED G.A.B.
DRAWN A.B.C.
CHECKED G.N.C.
PROJ. ENGR. G.A.B.

H. J. VIDAL P.E.
No. 37882

HAZEN AND SAWYER
Environmental Engineers & Scientists
4000 Hollywood Boulevard, Suite 750N
Hollywood, Florida 33021
Certificate of Authorization Number: 2771

SCALE 3/16"=1'-0"

CLIENTS PROJECT: –
ENGINEERS PROJECT: 44238-004
CAD REFERENCE: 44238-004BP3-M56

NORTH MIAMI FLORIDA
CITY OF NORTH MIAMI
PUBLIC WORKS UTILITIES

WINSON WATER TREATMENT PLANT
BID PACKAGE 3: WTP REHABILITATION
BACKWASH HOLDING BASIN PROPOSED PLAN

DATE: JUNE 2014
SHEET: 117 OF 335
DRAWING: M-56

PERMITTING

File = H:\44238-004\Drawings\Bid Package 3 - WTP Rehab\Mech\44238-004BP3-M56 Saved by HsCad2 Save date = 6/9/2014 8:31 PM

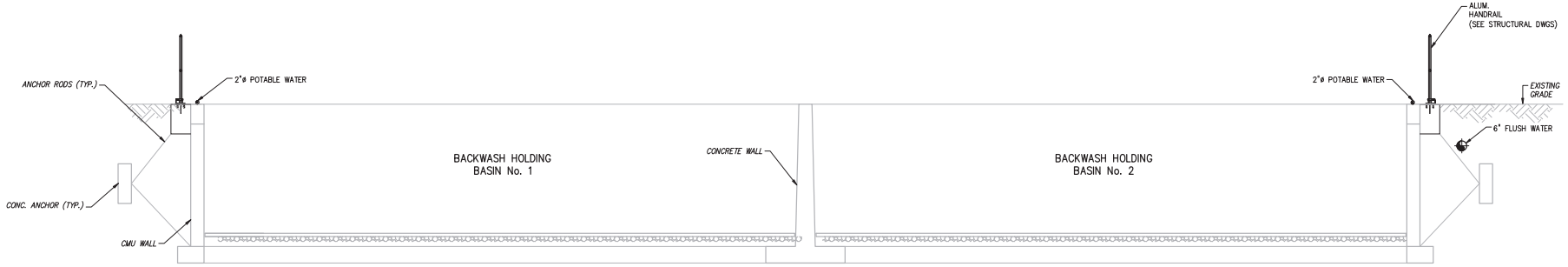


**SECTION** A / M-56
3/8" = 1'-0"

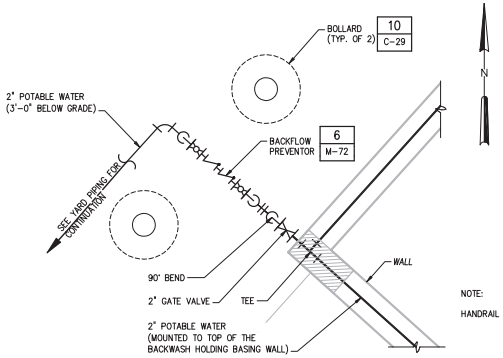


NOTE:

HANDRAIL NOT SHOWN FOR CLARITY.

**DETAIL** 1 / M-56
NTS

LEGEND:

EXISTING

PROPOSED

3/8"=1'-0"

12" 0 1 2 4'

| NO. | DATE | ISSUED FOR | BY |
|---|---|---|---|

DESIGNED G.A.B.
DRAWN G.P.B.
CHECKED G.N.C.
PROJ. ENGR. G.A.B.

H. J. VIDAL P.E.
No. 37882

HAZEN AND SAWYER
Environmental Engineers & Scientists
4000 Hollywood Boulevard, Suite 750N
Hollywood, Florida 33021
Certificate of Authorization Number: 2771

SCALE: AS NOTED

CLIENTS PROJECT: –
ENGINEERS PROJECT: 44238-004
CAD REFERENCE: 44238-004BP3-M57

NORTH MIAMI FLORIDA
CITY OF NORTH MIAMI
PUBLIC WORKS UTILITIES

WINSON WATER TREATMENT PLANT
BID PACKAGE 3: WTP REHABILITATION
BACKWASH HOLDING BASIN
SECTIONS AND DETAILS

DATE: JUNE 2014
SHEET: 118 OF 335
DRAWING: M-57

PERMITTING

PLOT DATE: 6/10/2014 5:07 PM BY: HS

XREFs= ..\Tblock\44238-004-BP3-TB,..\Base-BP3\S-BP3-BackwashBasin-Sections-X,..\Base-BP3\M-BP3-BackwashBasin-Plan,..\Base-BP3\S-BP3-BackwashBasin-Plan-X,..\Base-BP3\M-BP3-BackwashBasin-Section

File = H:\44238-004\Drawings\Bid Package 3 - WTP Rehab\Mech\44238-004BP3-M57 Saved by HScalf1 Save date = 6/9/2014 9:15 PM

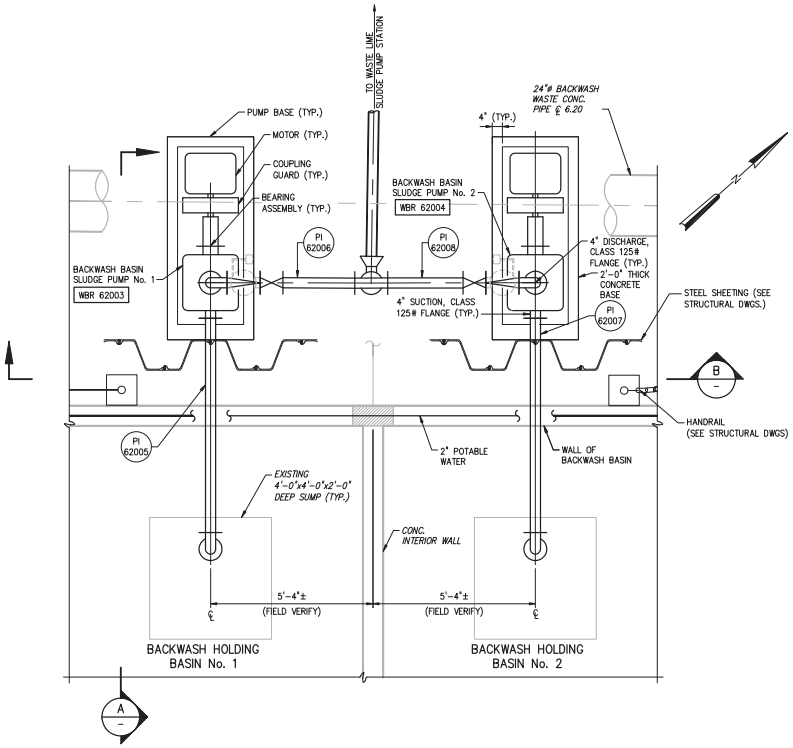


BACKWASH BASIN SLUDGE PUMPS

**DETAIL** 1/2" = 1'-0" (1 / M-56)

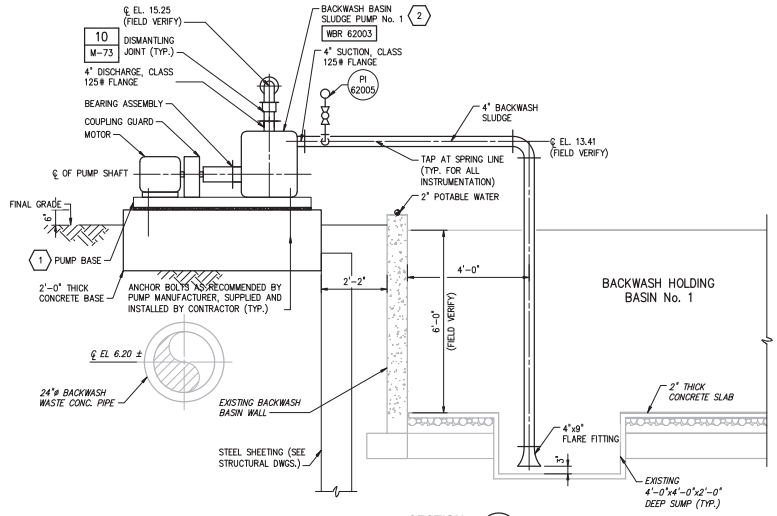


**SECTION** A, 1/2" = 1'-0"

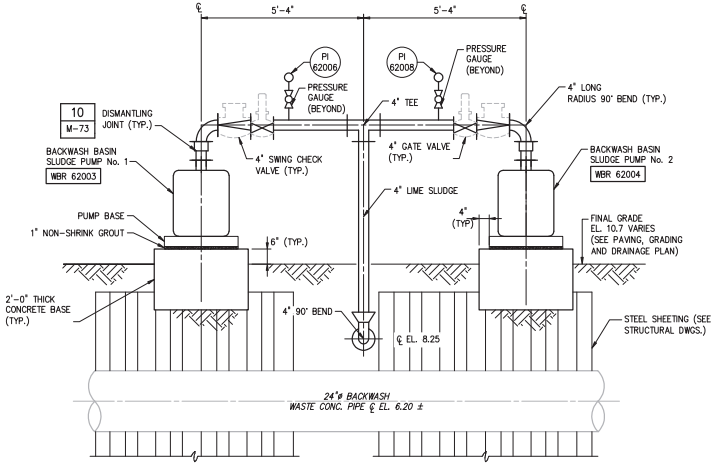


**SECTION** B, 1/2" = 1'-0"

GENERAL NOTES:

1. SEE STRUCTURAL DRAWINGS AND THE SPECIFICATION "PIPE SUPPORT" FOR PIPE SUPPORTS.
2. CONTRACTOR SHALL PROTECT THE EXISTING 24-INCH BW LINE DURING CONSTRUCTION AND MAKE PROVISIONS TO ACCOMMODATE ADDITIONAL LOADS IMPOSED FROM NEW PUMPS.

KEYED NOTES:

1. LEVEL PUMP BASE AND FILL BASE CAVITY WITH GROUT PER MANUFACTURER DIRECTIONS.
2. DIRECT DRIVE, FLEXIBLE COUPLED PUMP SHOWN. V-BELT ARRANGEMENT IS ALLOWED PER THE SPECIFICATION ENTITLED "SELF-PRIMING PUMPS".

1/2"=1'-0" 12" 0 1 3'

| NO. | DATE | ISSUED FOR | BY |
|---|---|---|---|
| 1 | 4/1/14 | 100% QA COMMENTS | H.J.V. |

DESIGNED G.A.B.
DRAWN G.P.B.
CHECKED G.N.C.
PROJ. ENGR. G.A.B.

H. J. VIDAL P.E. No. 37882

HAZEN AND SAWYER
Environmental Engineers & Scientists
4000 Hollywood Boulevard, Suite 750N
Hollywood, Florida 33021
Certificate of Authorization Number: 2771

SCALE 1/2"=1'-0"

CLIENTS PROJECT: –
ENGINEERS PROJECT: 44238-004
CAD REFERENCE: 44238-004BP3-M58

NORTH MIAMI FLORIDA
CITY OF NORTH MIAMI
PUBLIC WORKS UTILITIES

WINSON WATER TREATMENT PLANT
BID PACKAGE 3: WTP REHABILITATION
BACKWASH BASIN SLUDGE PUMP PLAN AND SECTIONS

DATE: JUNE 2014
SHEET: 119 OF 335
DRAWING: M-58

PERMITTING

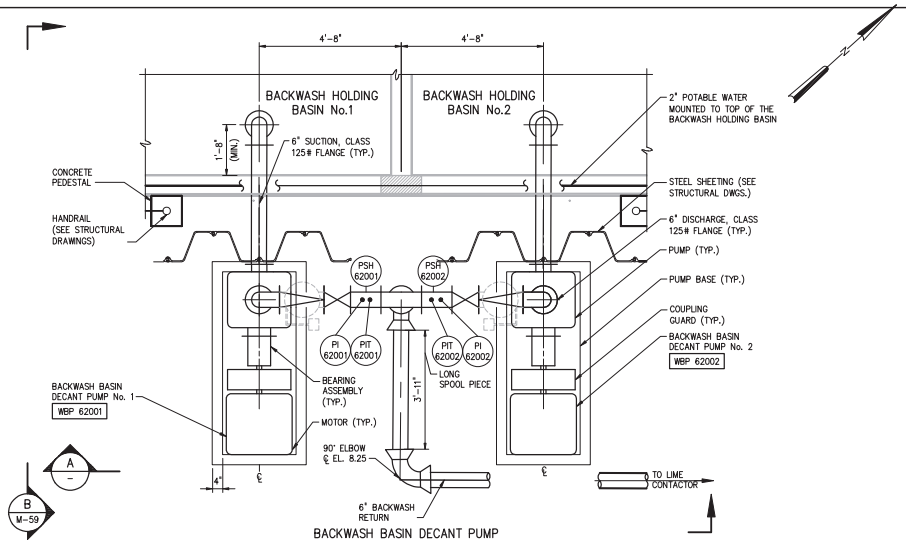


BACKWASH BASIN DECANT PUMP

**DETAIL** 2 (M-56)
1/2" = 1'-0"

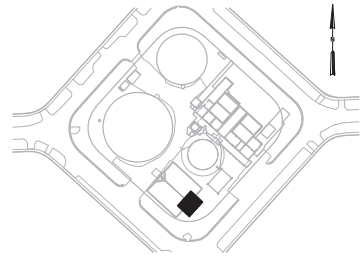

LOCATION MAP

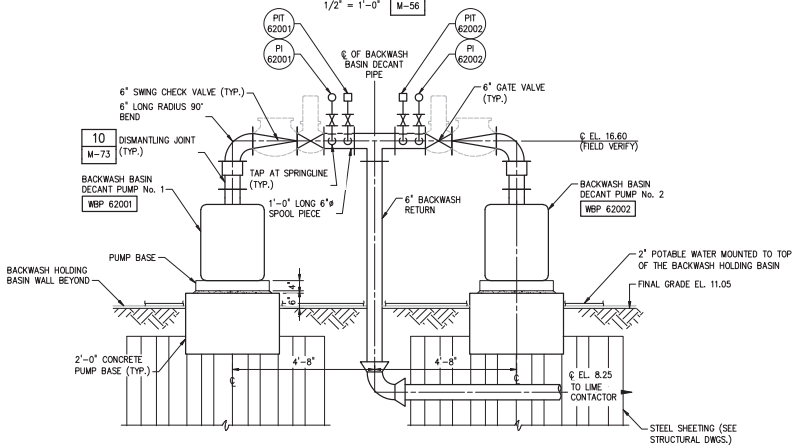


**SECTION** A
1/2" = 1'-0"

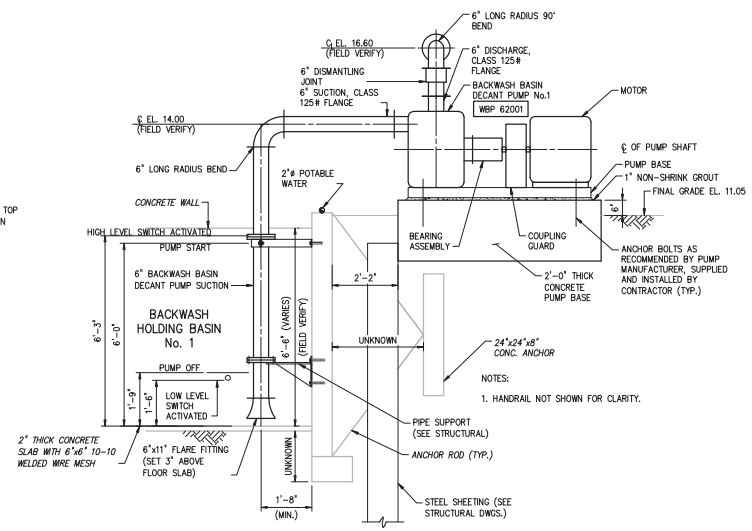


**SECTION** B (M-59)
1/2" = 1'-0"

NOTES:

1. HANDRAIL NOT SHOWN FOR CLARITY.

KEYED NOTES:

1. LEVEL PUMP BASE AND FILL BASE CAVITY WITH GROUT PER MANUFACTURER DIRECTIONS.
2. DIRECT DRIVE, FLEXIBLE COUPLED PUMP SHOWN. V-BELT ARRANGEMENT IS ALLOWED PER THE SPECIFICATION ENTITLED "SELF-PRIMING PUMPS".

1/2"=1'-0" 12" 0 1 3'

| NO. | DATE | ISSUED FOR | BY |
|---|---|---|---|

DESIGNED G.A.B.
DRAWN G.P.B.
CHECKED G.N.C.
PROJ. ENGR. G.A.B.

H. J. VIDAL P.E.
No. 37882

HAZEN AND SAWYER
Environmental Engineers & Scientists
4000 Hollywood Boulevard, Suite 750N
Hollywood, Florida 33021
Certificate of Authorization Number: 2771

SCALE 1/2"=1'-0"

CLIENTS PROJECT: –
ENGINEERS PROJECT: 44238-004
CAD REFERENCE: 44238-004BP3-M59

NORTH MIAMI FLORIDA
CITY OF NORTH MIAMI
PUBLIC WORKS UTILITIES

WINSON WATER TREATMENT PLANT
BID PACKAGE 3: WTP REHABILITATION

BACKWASH BASIN DECANT PUMP
PLAN AND SECTIONS

DATE: JUNE 2014
SHEET: 120 OF 335
DRAWING: M-59

PERMITTING

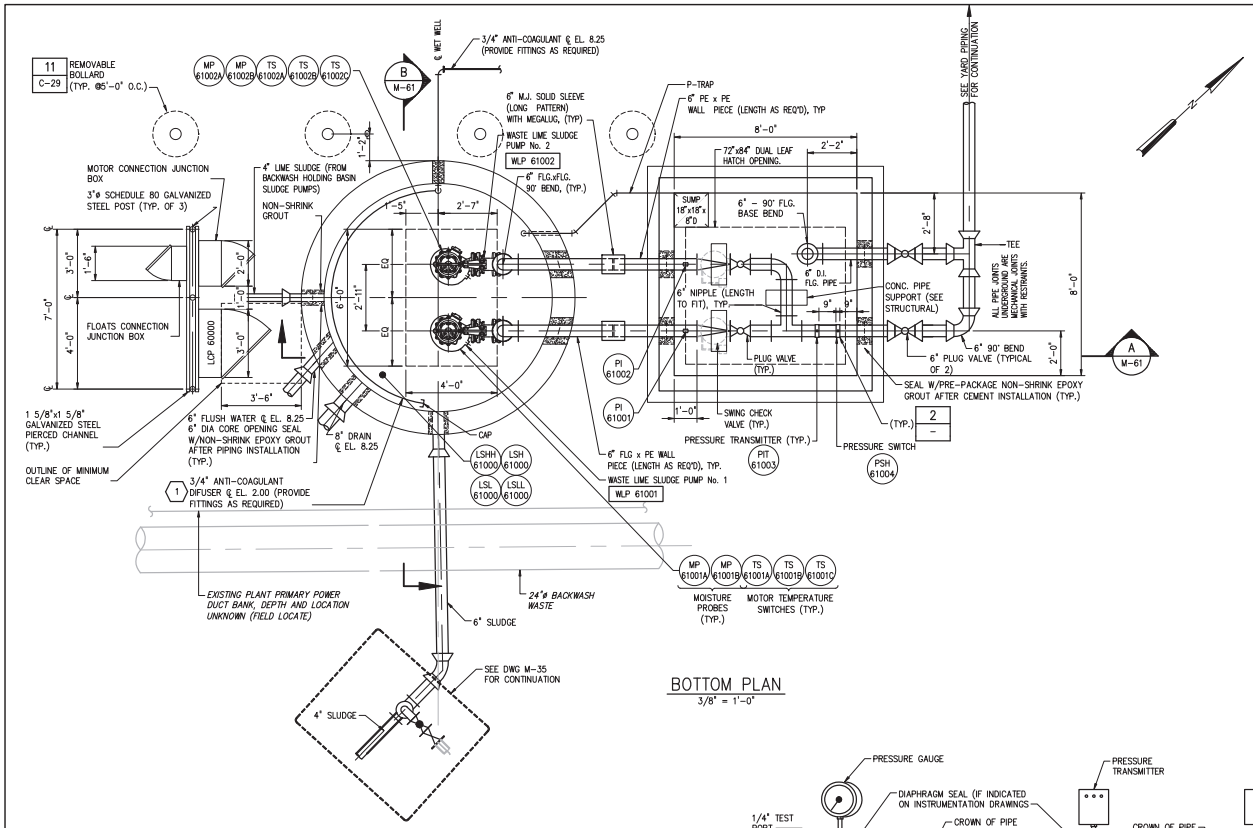


BOTTOM PLAN
3/8" = 1'-0"

| PUMP DATA: | | |
|---|---|---|
| FLUID | | WATER TREATMENT LIME SOFTENING RESIDUALS |
| INSTALLATION LOCATION | | 12098 N.W. 11th AVE NORTH MIAMI, FL 33168 |
| PUMP TYPE | SUBMERSIBLE PUMP | |
| OPERATING POINT | CAPACITY, GPM | 440 |
| | TDH, FEET | 66 |
| SHUT OFF HEAD, | FT | 83 |
| CONTINUOUS OPERATING RANGE | MAXIMUM TDH, FT | 74 |
| | CAPACITY, GPM | 300 |
| | MINIMUM TDH, FT | 55 |
| | CAPACITY, GPM | 700 |
| | NPSHR, FT | 6 |
| | PUMP EFFICIENCY AT B.E.P., % | 75 |
| | PUMP EFFICIENCY MIN. @ RUNOUT, % | 70 |

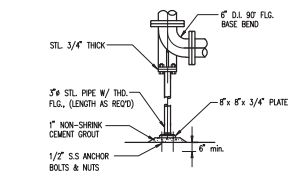


GALVANIZED PIPE SUPPORT
DETAIL 1 / M-61
NTS

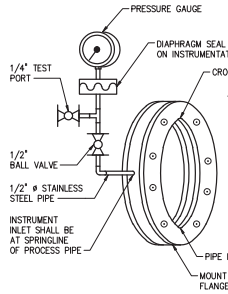


PRESSURE GAUGE

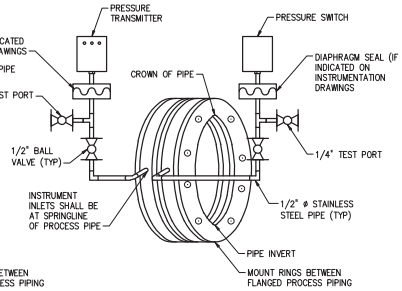


PRESSURE TRANSMITTER AND SWITCH

ISOLATING RING SEAL
DETAIL 2 / –
NTS

KEYED NOTE

1 1/4"ø ORIFICE AT THE BOTTOM OF THE DIFUSSER (TYPICAL OF 12 EQUALLY SPACED ORIFICE)

LEGEND:

EXISTING
PROPOSED

3/8"=1'-0"

12" 0 1 2 4'

| NO. | DATE | ISSUED FOR | BY |
|---|---|---|---|
| 1 | 4/1/14 | 100% QA COMMENTS | H.J.V. |

DESIGNED G.A.B.
DRAWN G.P.B.
CHECKED G.N.C.
PROJ. ENGR. G.A.B.

H. J. VIDAL P.E.
No. 37882

HAZEN AND SAWYER
Environmental Engineers & Scientists
4000 Hollywood Boulevard, Suite 750N
Hollywood, Florida 33021
Certificate of Authorization Number: 2771

SCALE: AS NOTED

CLIENTS PROJECT: –
ENGINEERS PROJECT: 44238-004
CAD REFERENCE: 44238-004BP3-M60

NORTH MIAMI FLORIDA
CITY OF NORTH MIAMI
PUBLIC WORKS UTILITIES

WINSON WATER TREATMENT PLANT
BID PACKAGE 3: WTP REHABILITATION
WASTE LIME SLUDGE PUMP STATION
PLAN AND DETAILS

DATE: JUNE 2014
SHEET: 121 OF 335
DRAWING: M-60

PERMITTING

PLOT DATE: 6/10/2014 5:18 PM BY: HS

XREFs= ..\Block\44238-004-BP3-TB,..\Base-BP3\M-BP3-SludgePS-Plan,..\Base-BP3\M-BP3-SludgePS-Section,..\Base-BP3\S-BP3-SludgePS-Section,..\Base-BP3\S-BP3-SludgePS-Plan

File = H:\44238-004\Drawings\Bid Package 3 - WTP Rehab\Mech\44238-004BP3-M60 Saved by HsCad2 Save date = 6/9/2014 8:37 PM

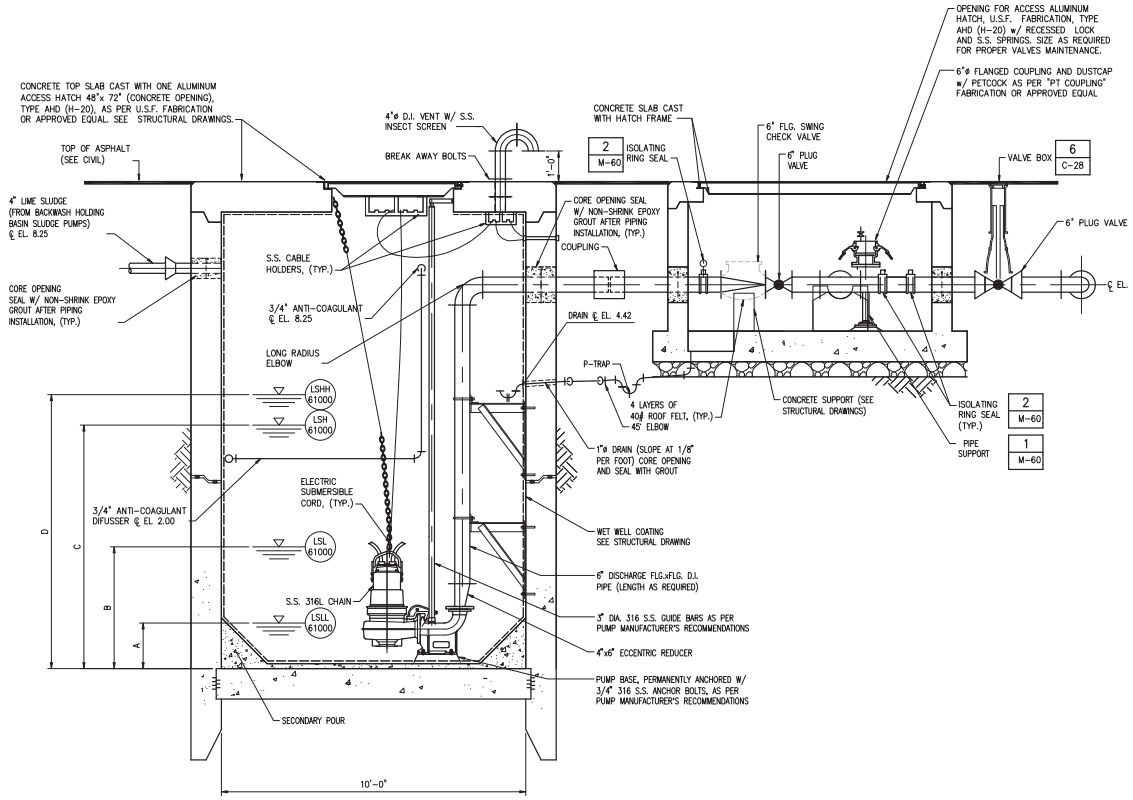


**SECTION** A M-60
1/2" = 1'-0"

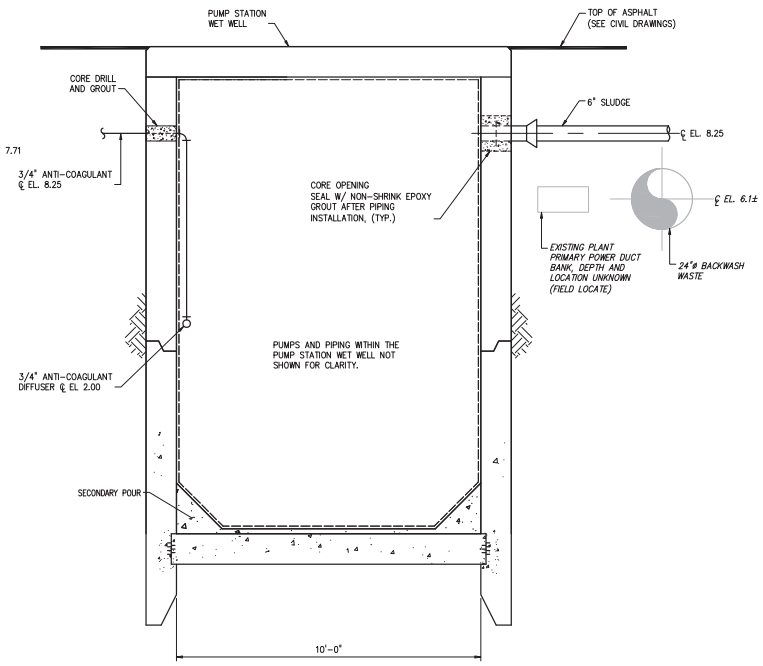


**SECTION** B M-60
1/2" = 1'-0"

| LEVEL SWITCH | FUNCTION | SWITCH ACTIVATION WATER DEPTH |
|---|---|---|
| LSLL 61000 | ALL PUMPS OFF | A = 1'-6" |
| LSL 61000 | LEAD PUMP ON | B = 4'-0" |
| LSH 61000 | LAG PUMP ON | C = 8'-0" |
| LSHH 61000 | ALARM ON | D = 9'-0" |

LEGEND:
EXISTING
PROPOSED

1/2"=1'-0" 12" 0 1 3'

| NO. | DATE | ISSUED FOR | BY |
|---|---|---|---|

DESIGNED G.A.B.
DRAWN G.P.B.
CHECKED G.N.C.
PROJ. ENGR. G.A.B.

H. J. VIDAL P.E.
No. 37882

**HAZEN AND SAWYER**
Environmental Engineers & Scientists
4000 Hollywood Boulevard, Suite 750N
Hollywood, Florida 33021
Certificate of Authorization Number: 2771

SCALE 1/2"=1'-0"

CLIENTS PROJECT: –
ENGINEERS PROJECT: 44238-004
CAD REFERENCE: 44238-004BP3-M61

NORTH MIAMI FLORIDA
CITY OF NORTH MIAMI
PUBLIC WORKS UTILITIES

WINSON WATER TREATMENT PLANT
BID PACKAGE 3: WTP REHABILITATION
WASTE LIME SLUDGE PUMP STATION SECTIONS

DATE: JUNE 2014
SHEET: 122 OF 335
DRAWING: M-61

PERMITTING

PLOT DATE: 6/10/2014 5:21 PM BY: HS

XREFs= ..\Titleck\44238-004-BP3-TB,..\Base-BP3\M-BP3-SludgePS-Section,..\Base-BP3\S-BP3-SludgePS-Section,..\Base-BP3\M-BP3-SludgePS-Plan,..\Base-BP3\S-BP3-SludgePS-Plan

File = H:\44238-004\Drawings\Bid Package 3 - WTP Rehab\Mech\44238-004BP3-M61 Saved by HScalll Save date = 6/9/2014 7:12 PM

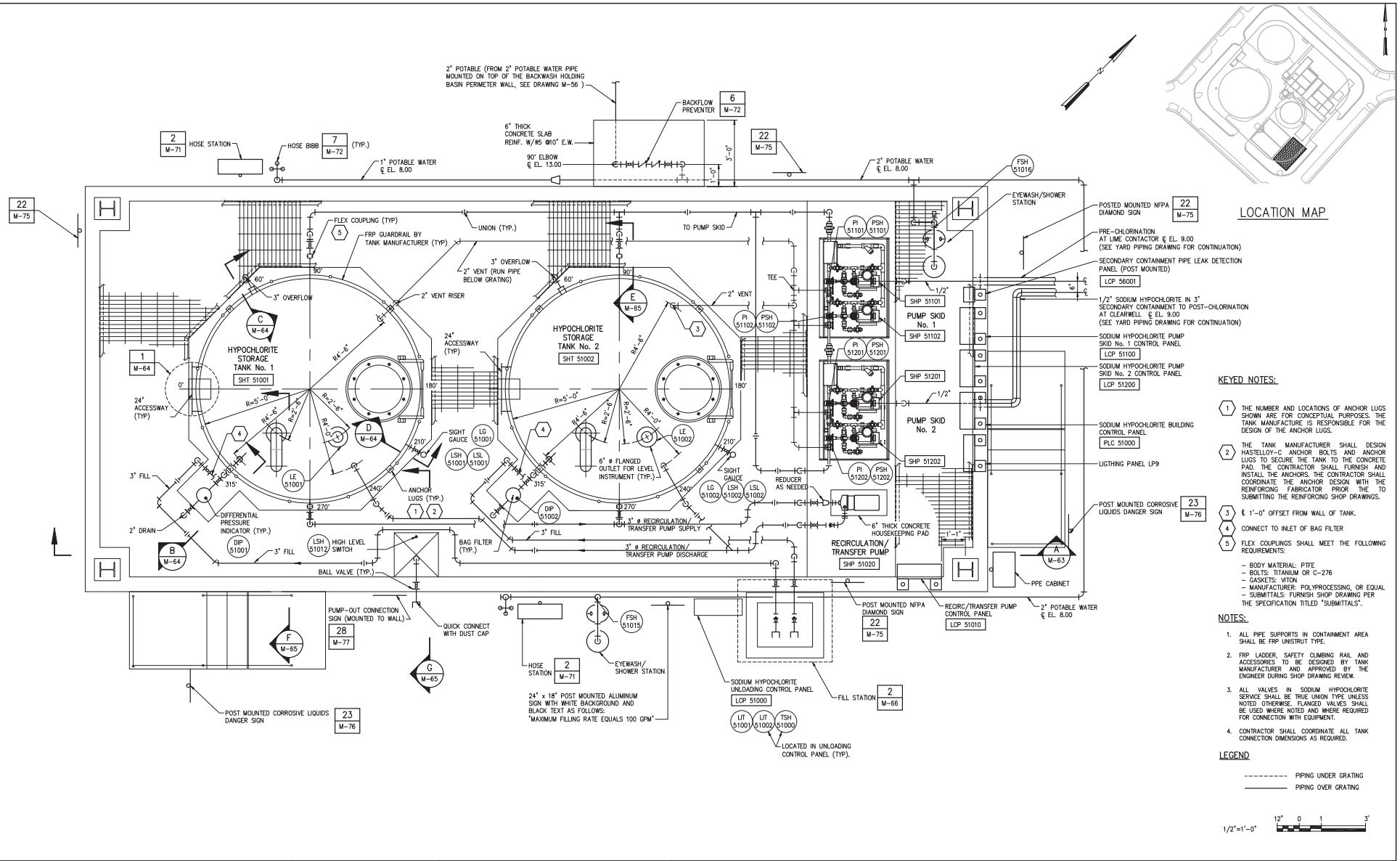


| NO. | DATE | ISSUED FOR | BY |
|---|---|---|---|
| 1 | 4/1/14 | 100% QA COMMENTS | H.J.V. |

DESIGNED G.A.B.
DRAWN G.P.B.
CHECKED G.N.C.
PROJ. ENGR. G.A.B.

H. J. VIDAL P.E.
No. 37882

HAZEN AND SAWYER
Environmental Engineers & Scientists
4000 Hollywood Boulevard, Suite 750N
Hollywood, Florida 33021
Certificate of Authorization Number: 2771

SCALE 1/2"=1'-0"

CLIENTS PROJECT: –
ENGINEERS PROJECT: 44238-004
CAD REFERENCE: 44238-004BP3-M62

NORTH MIAMI FLORIDA
CITY OF NORTH MIAMI
PUBLIC WORKS UTILITIES

WINSON WATER TREATMENT PLANT
BID PACKAGE 3: WTP REHABILITATION
SODIUM HYPOCHLORITE FACILITIES PROPOSED PLAN

DATE: JUNE 2014
SHEET: 123 OF 335
DRAWING: M-62

PERMITTING

PLOT DATE: 6/10/2014 2:20 PM BY: HS

XREFs= ..\Thlock\44238-004-BP3-TB,..\Base-BP3\M-BP3-Hypochlorite-Plan,..\Base-BP3\S-BP3-Hypochlorite-Plan

File = H:\44238-004\Drawings\Bid Package 3 - WTP Rehab\Mech\44238-004BP3-M62 Saved by HsCad2 Save date = 6/9/2014 6:32 PM

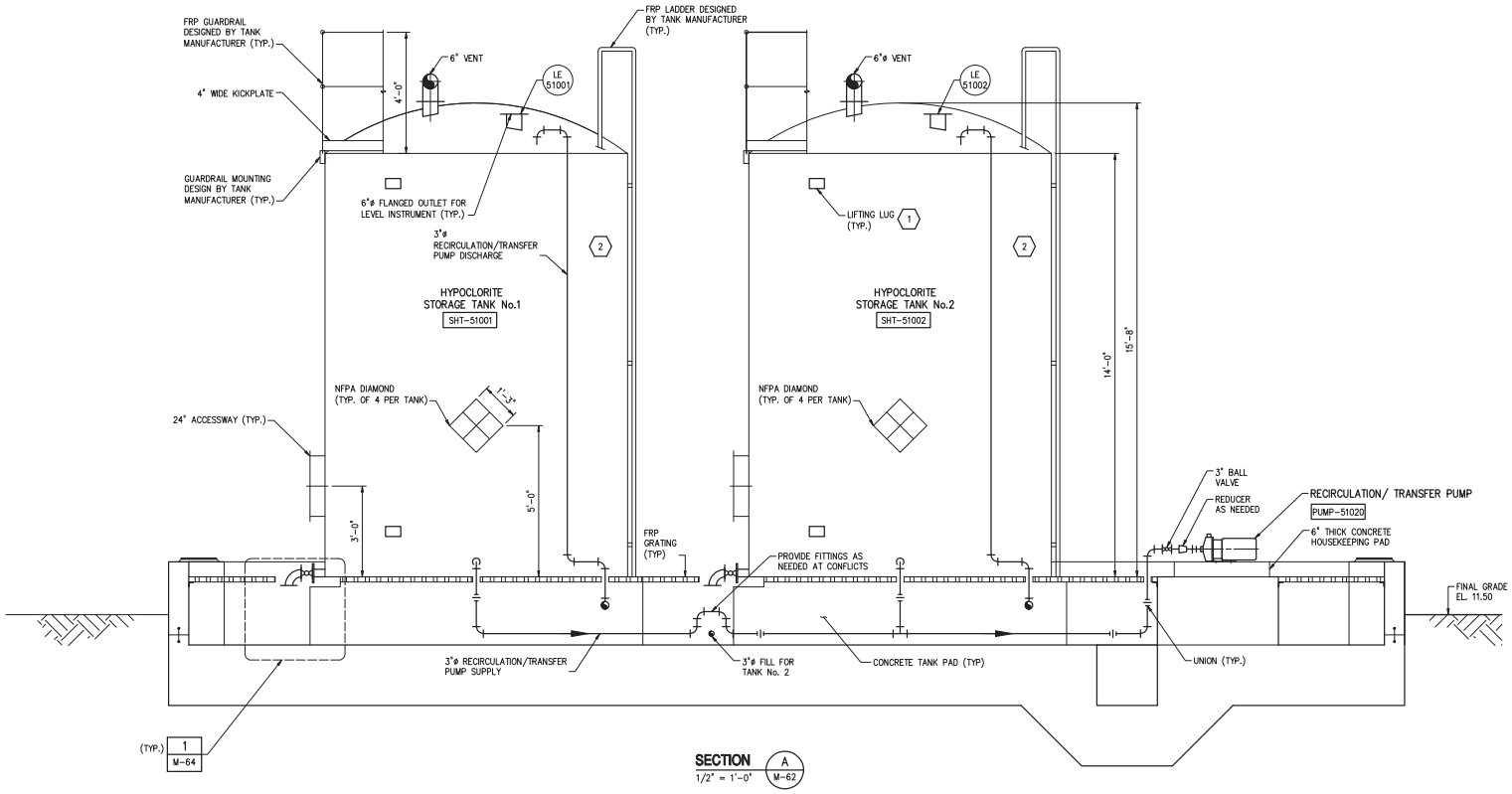


**SECTION** A / M-62
1/2" = 1'-0"

## KEYED NOTES:

1. LOCATION AND NUMBER OF LIFTING LUGS SHALL BE DESIGNED BY THE TANK MANUFACTURER
2. SIGHT GAUGE NOT SHOWN IN THIS SECTION FOR CLARITY. SEE SECTION D ON DRAWING M-64 FOR SECTION VIEW OF SIGHT GAUGE.

## GENERAL NOTES:

1. PRE-FABRICATED BUILDING NOT SHOWN FOR CLARITY.
2. BAG FILTER AND ASSOCIATED PIPING NOT SHOWN FOR CLARITY.
3. ALL PIPE SUPPORTS IN CONTAINMENT AREA SHALL BE FRP UNISTRUT TYPE.
4. FRP LADDER, SAFETY CLIMBING RAIL AND ACCESSORIES TO BE DESIGNED BY TANK MANUFACTURER AND APPROVED BY THE ENGINEER DURING SHOP DRAWING REVIEW.
5. HORIZONTAL RUN OF RECIRCULATION/TRANSFER PUMP DISCHARGE PIPE NOT SHOWN FOR CLARITY.
6. ALL VALVES IN SODIUM HYPOCHLORITE SERVICE SHALL BE TRUE UNION TYPE UNLESS NOTED OTHERWISE. FLANGED VALVES SHALL BE USED WHERE NOTED AND WHERE REQUIRED FOR CONNECTION WITH EQUIPMENT.

1/2"=1'-0" 12" 0 1 3'

| NO. | DATE | ISSUED FOR | BY |
|---|---|---|---|

DESIGNED G.A.B.
DRAWN G.P.B.
CHECKED G.N.C.
PROJ. ENGR. G.A.B.

H. J. VIDAL P.E.
No. 37882

**HAZEN AND SAWYER**
Environmental Engineers & Scientists
4000 Hollywood Boulevard, Suite 750N
Hollywood, Florida 33021
Certificate of Authorization Number: 2771

SCALE 1/2"=1'-0"

CLIENTS PROJECT: –
ENGINEERS PROJECT: 44238-004
CAD REFERENCE: 44238-004BP3-M63

NORTH MIAMI FLORIDA
CITY OF NORTH MIAMI
PUBLIC WORKS UTILITIES

WINSON WATER TREATMENT PLANT
BID PACKAGE 3: WTP REHABILITATION
SODIUM HYPOCHLORITE FACILITIES SECTIONS – SHEET 1

DATE: JUNE 2014
SHEET: 124 OF 335
DRAWING: M-63

PERMITTING

PLOT DATE: 6/10/2014 2:28 PM BY: HS

XREFs= ..\Titleck\44238-004-BP3-TB,..\Base-BP3\M-BP3-Hypochlorite-Sections,..\Base-BP3\S-BP3-Hypochlorite-Sections

File = H:\44238-004\Drawings\Bid Package 3 - WTP Rehab\Mech\44238-004BP3-M63 Saved by HScalf Save date = 6/9/2014 8:43 PM

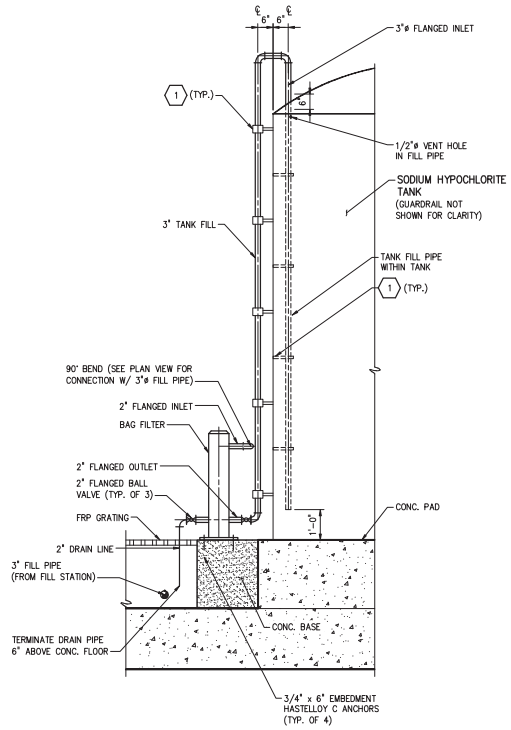


**SECTION** B / M-62
1/2" = 1'-0"

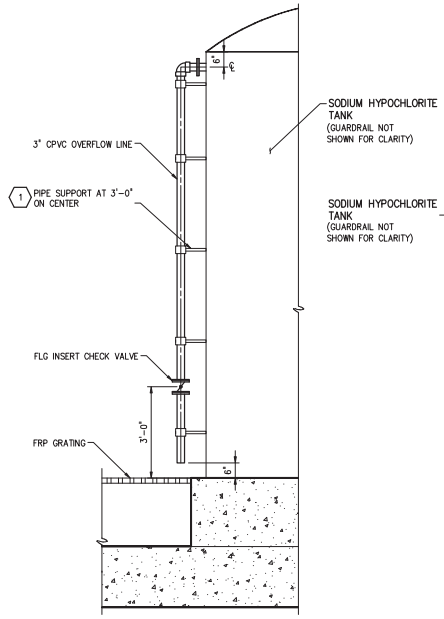


**SECTION** C / M-62
1/2" = 1'-0"

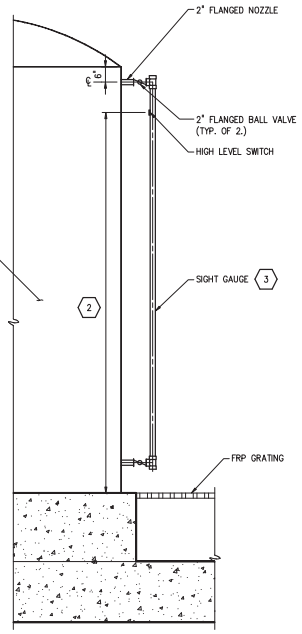


**SECTION** D / M-62
1/2" = 1'-0"

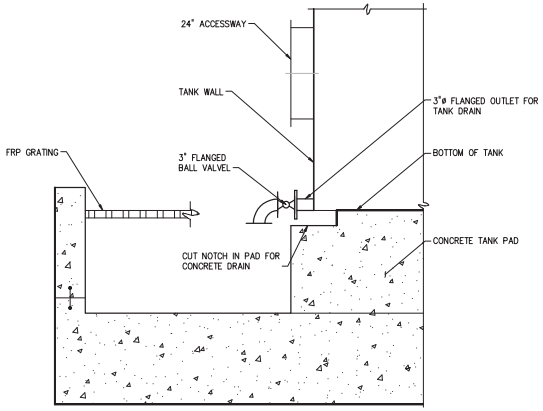


SECTION

TANK DRAIN

**DETAIL** 1 / M-62
3/4" = 1'-0"

KEYED NOTES:

1. FRP TANKS MANUFACTURER SHALL DESIGN PIPE SUPPORTS AT 3'-0" ON CENTER ALONG EXTERIOR AND INTERIOR OF THE TANK SIDE WALL TO SUPPORT THE VERTICAL PIPES.
2. MOUNT SWITCH AT 13'-0" ABOVE THE TANK FLOOR. ADJUST SWITCH MOUNTING HEIGHT AS DIRECTED BY ENGINEER IN THE FIELD.
3. THE SIGHT GAUGE FLAG ASSEMBLY SHALL INCLUDE A STAINLESS STEEL SCALE MOUNTED ADJACENT TO THE FLAG ASSEMBLY. THE SCALE SHALL HAVE TICK MARKS EVERY 50 GALLONS AND NUMBERS EVERY 500 GALLONS.

1/2"=1'-0" 12" 0 1 3'
3/4"=1'-0" 6" 0 1 2'

| NO. | DATE | ISSUED FOR | BY |
|---|---|---|---|

DESIGNED G.A.B.
DRAWN G.P.B.
CHECKED G.N.C.
PROJ. ENGR. G.A.B.

H. J. VIDAL P.E.
No. 37882

**HAZEN AND SAWYER**
Environmental Engineers & Scientists
4000 Hollywood Boulevard, Suite 750N
Hollywood, Florida 33021
Certificate of Authorization Number: 2771

SCALE: AS NOTED

CLIENTS PROJECT: –
ENGINEERS PROJECT: 44238-004
CAD REFERENCE: 44238-004BP3-M64

NORTH MIAMI FLORIDA
**CITY OF NORTH MIAMI**
**PUBLIC WORKS UTILITIES**

WINSON WATER TREATMENT PLANT
BID PACKAGE 3: WTP REHABILITATION

SODIUM HYPOCHLORITE FACILITIES
SECTIONS – SHEET 2

DATE: JUNE 2014
SHEET: 125 OF 335
DRAWING: M-64

PERMITTING

PLOT DATE: 6/10/2014 2:34 PM BY: HS

XREFs= ..\Tblock\44238-004-BP3-TB,..\Base-BP3\M-BP3-Hypochlorite-Sections,..\Base-BP3\S-BP3-Hypochlorite-Sections

File = H:\44238-004\Drawings\Bid Package 3 - WTP Rehab\Mech\44238-004BP3-M64 Saved by lmsoriano Save date = 6/9/2014 8:27 PM

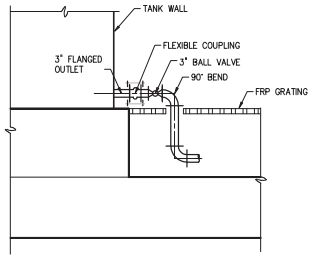


**SECTION** E (M-62)
1/2" = 1'-0"

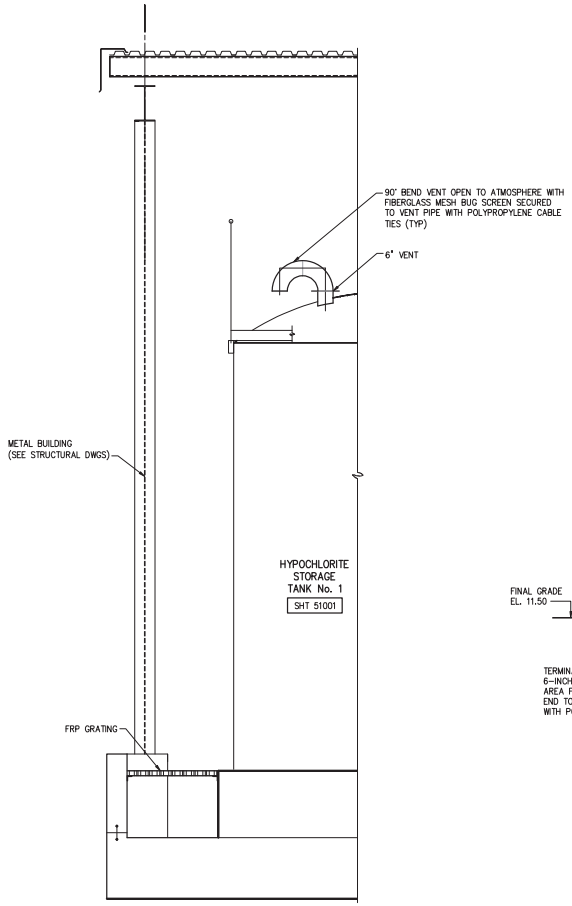


**SECTION** F (M-62)
1/2" = 1'-0"

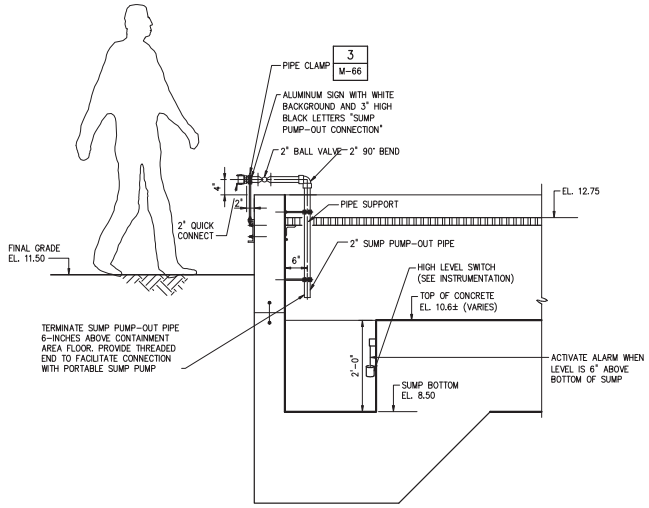


**SECTION** G (M-62)
3/4" = 1'-0"

3/4"=1'-0" 6" 0 1 2'
1/2"=1'-0" 12" 0 1 3'

| NO. | DATE | ISSUED FOR | BY |
|---|---|---|---|

DESIGNED G.A.B.
DRAWN L.M.S.
CHECKED J.N.M.
PROJ. ENGR. G.A.B.

H. J. VIDAL P.E.
No. 37882

**HAZEN AND SAWYER**
Environmental Engineers & Scientists
4000 Hollywood Boulevard, Suite 750N
Hollywood, Florida 33021
Certificate of Authorization Number: 2771

SCALE: AS NOTED

CLIENTS PROJECT: –
ENGINEERS PROJECT: 44238-004
CAD REFERENCE: 44238-004BP3-M65

NORTH MIAMI FLORIDA
CITY OF NORTH MIAMI
PUBLIC WORKS UTILITIES

WINSON WATER TREATMENT PLANT
BID PACKAGE 3: WTP REHABILITATION
SODIUM HYPOCHLORITE FACILITIES
SECTIONS – SHEET 3

DATE: JUNE 2014
SHEET: 126 OF 335
DRAWING: M-65

PERMITTING

PLOT DATE: 6/10/2014 2:39 PM BY: HS

XREFs= ..\Tblock\44238-004-BP3-TB,..\Base-BP3\M-BP3-Hypochlorite-Sections,..\Base-BP3\S-BP3-Hypochlorite-Sections

File = H:\44238-004\Drawings\Bid Package 3 - WTP Rehab\Mech\44238-004BP3-M65 Saved by HScalf Save date = 6/9/2014 7:37 PM

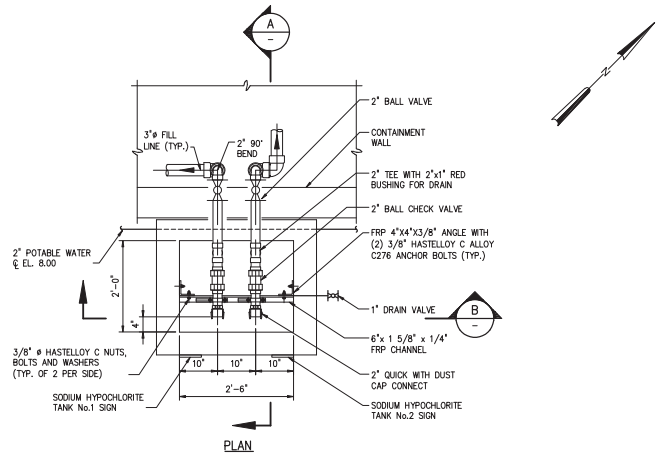


PLAN

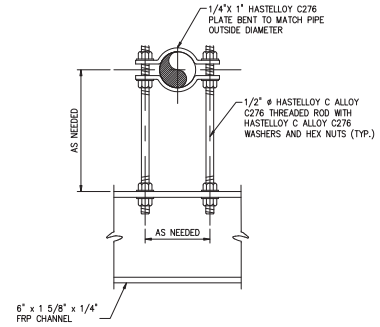


PIPE CLAMP

**DETAIL** 3 / –
NTS

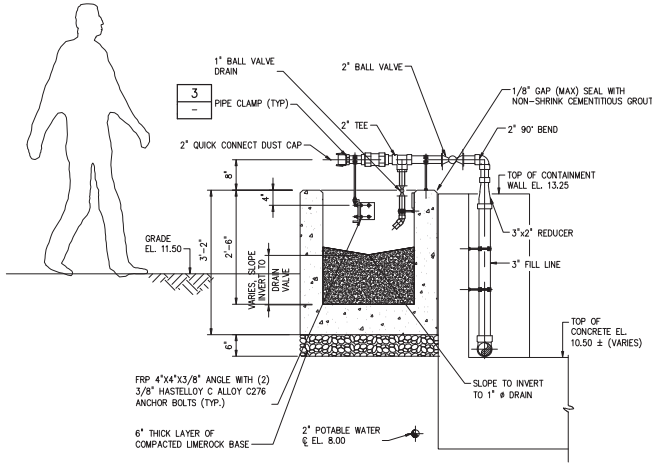


**SECTION** A / –
3/4" = 1'-0"

FILL STATION

**DETAIL** 2 / M-62
3/4" = 1'-0"

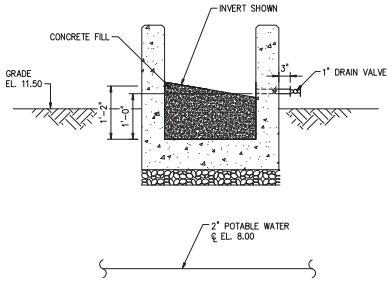


NOTE:

FILL PIPING NOT SHOWN FOR CLARITY

**SECTION** B / –
3/4" = 1'-0"

GENERAL NOTES:

1. ALL VALVES IN SODIUM HYPOCHLORITE SERVICE SHALL BE TRUE UNION TYPE UNLESS NOTED OTHERWISE.
2. PIPING IN SECTION B NOT SHOWN FOR CLARITY.

3/4"=1'-0" 6" 0 1 2'

| NO. | DATE | ISSUED FOR | BY |
|---|---|---|---|

DESIGNED G.A.B.
DRAWN G.P.B.
CHECKED G.N.C.
PROJ. ENGR. G.A.B.

H. J. VIDAL P.E.
No. 37882

HAZEN AND SAWYER
Environmental Engineers & Scientists
4000 Hollywood Boulevard, Suite 750N
Hollywood, Florida 33021
Certificate of Authorization Number: 2771

SCALE: AS NOTED

CLIENTS PROJECT: –
ENGINEERS PROJECT: 44238-004
CAD REFERENCE: 44238-004BP3-M66

NORTH MIAMI FLORIDA
CITY OF NORTH MIAMI
PUBLIC WORKS UTILITIES

WINSON WATER TREATMENT PLANT
BID PACKAGE 3: WTP REHABILITATION
SODIUM HYPOCHLORITE FACILITIES DETAILS

DATE: JUNE 2014
SHEET: 127 OF 335
DRAWING: M-66

PERMITTING

PLOT DATE: 6/10/2014 2:42 PM BY: HS
XREFs= .\Tblock\44238-004-BP3-TB
File = H:\44238-004\Drawings\Bid Package 3 - WTP Rehab\Mech\44238-004BP3-M66 Saved by HsCad2 Save date = 6/9/2014 4:59 PM

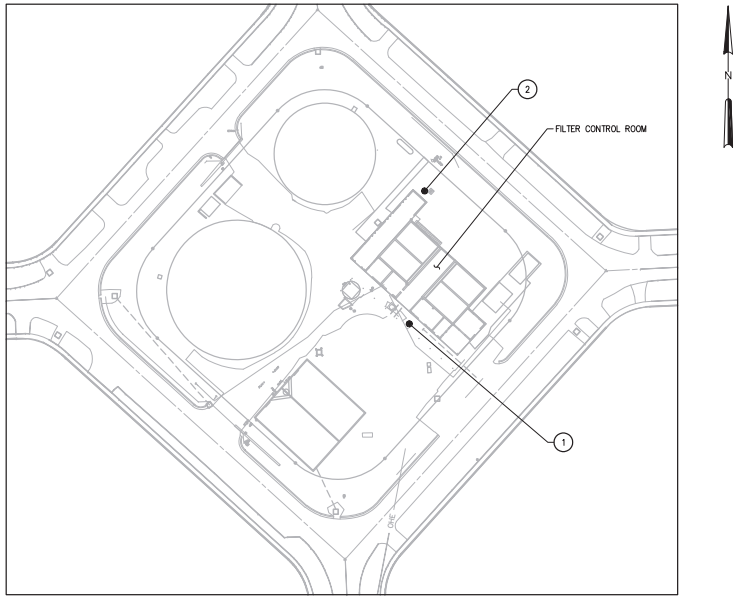


SAMPLE PUMP LOCATION MAP
NTS

SAMPLE PUMP SCHEDULE

| MARK | SAMPLE PUMP ID NO. | SAMPLE FROM | ANALYZER | ANALYZER LOCATION |
|---|---|---|---|---|
| 1 | AIP 22100 | LIME CONTACTOR EFFLUENT VIA 1/2"ø TAP ON THE 36"ø LIME CONTACTOR EFFLUENT PIPE RISER | FREE CHLORINE RESIDUAL ANALYZER AE/AIT 22021 | FILTER CONTROL ROOM |
| 2 | AIP 41500 | HIGH SERVICE PUMP STATION SUPPLY PIPE | FREE CHLORINE RESIDUAL ANALYZER AE/AIT 41510 | FILTER CONTROL ROOM |

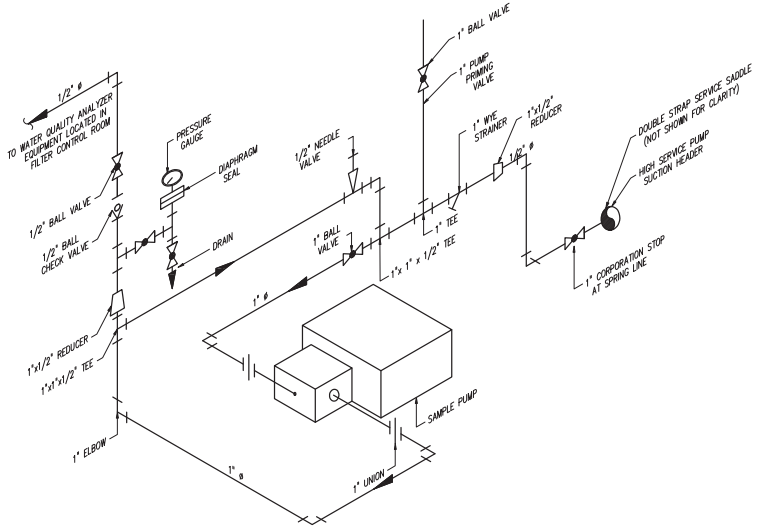


SAMPLE PUMP ISOMETRIC

**DETAIL** 6 / M-35
NTS

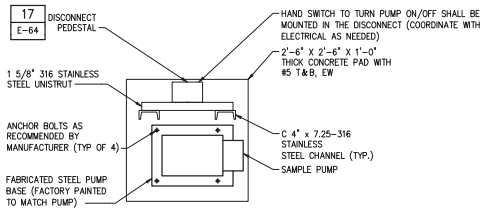


PLAN

**DETAIL** 7 / M-35
NTS

GENERAL NOTE:

1. SEE PLAN VIEW FOR ORIENTATION.

PERMITTING

| NO. | DATE | ISSUED FOR | BY |
|---|---|---|---|

DESIGNED G.A.B.
DRAWN L.M.S.
CHECKED J.N.M.
PROJ. ENGR. G.A.B.

H. J. VIDAL P.E.
No. 37882

HAZEN AND SAWYER
Environmental Engineers & Scientists
4000 Hollywood Boulevard, Suite 750N
Hollywood, Florida 33021
Certificate of Authorization Number: 2771

SCALE NTS

CLIENTS PROJECT: –
ENGINEERS PROJECT: 44238-004
CAD REFERENCE: 44238-004BP3-M67

NORTH MIAMI FLORIDA
CITY OF NORTH MIAMI
PUBLIC WORKS UTILITIES

WINSON WATER TREATMENT PLANT
BID PACKAGE 3: WTP REHABILITATION
SAMPLE PUMP DETAILS

DATE: JUNE 2014
SHEET: 128 OF 335
DRAWING: M-67

PLOT DATE: 6/10/2014 2:44 PM BY: HS
XREFs= ..\Titleck\44238-004-BP3-TB,..\Base-BP3\C-Site-Survey-X
File = H:\44238-004\Drawings\Bid Package 3 - WTP Rehab\Mech\44238-004BP3-M67 Saved by HS Save date = 6/9/2014 8:35 PM

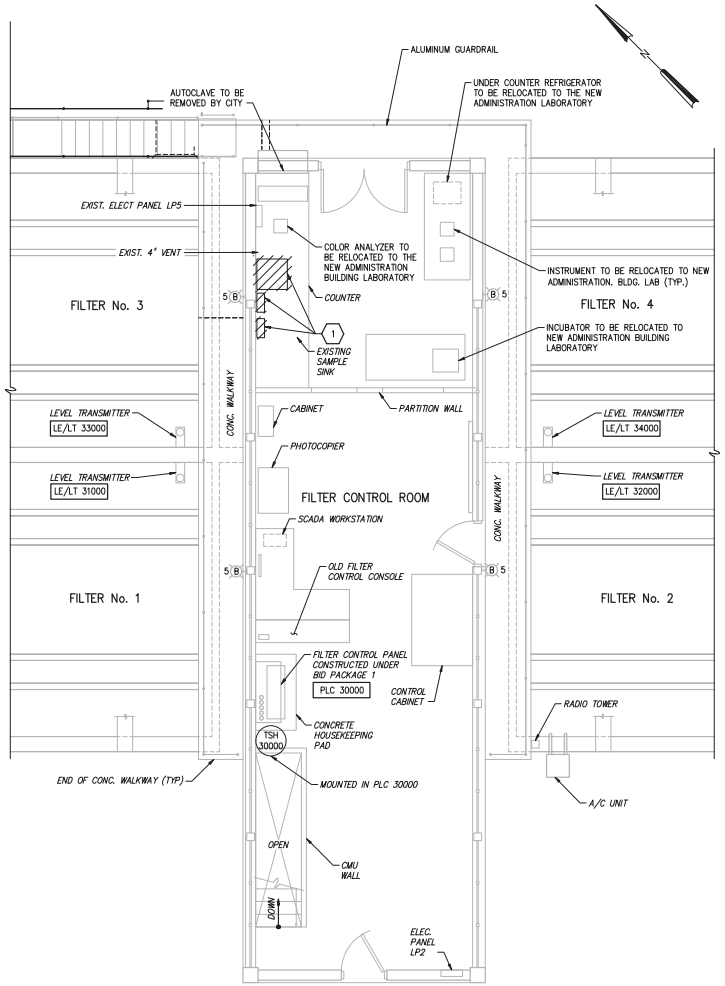


FILTER CONTROL ROOM PLAN EXISTING CONDITIONS
1/4" = 1'-0"

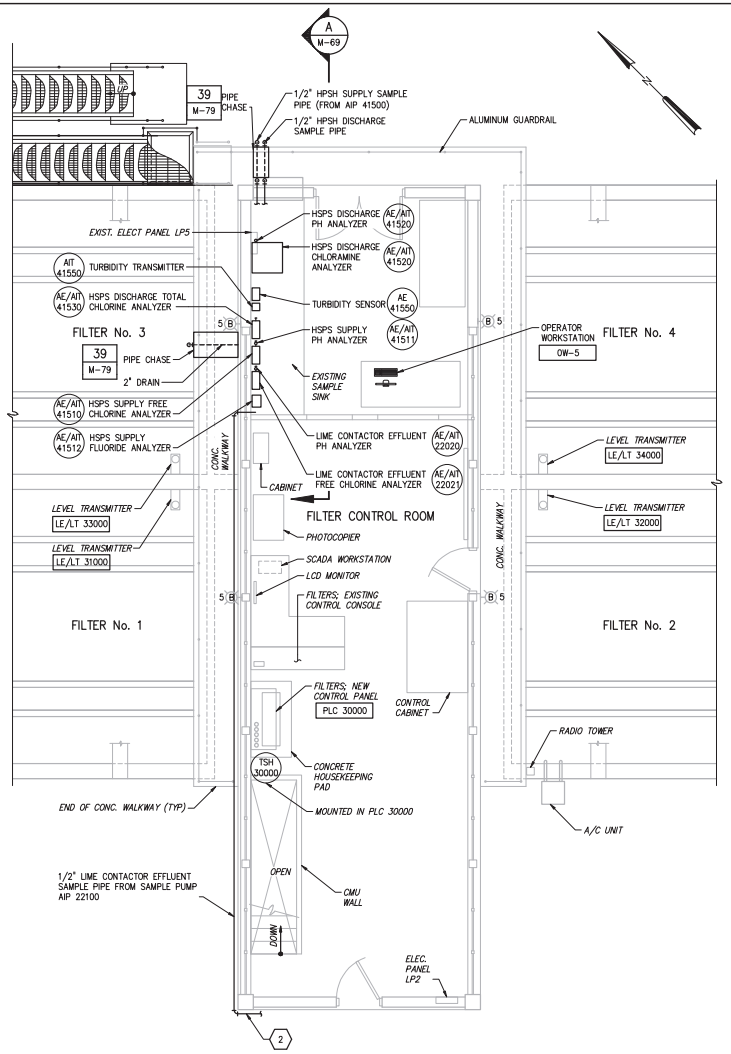


FILTER CONTROL ROOM PLAN PROPOSED CONDITIONS
1/4" = 1'-0"

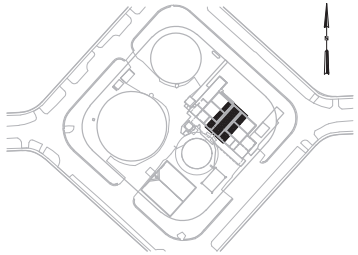

LOCATION MAP

KEYED NOTES:

1. EXISTING CHLORAMINE AND CHLORINE RESIDUAL ANALYZERS TO BE REMOVED.
2. FIELD ROUTE THE PROPOSED PIPE WITH OWNERS ASSITANCE TO CONNECTION WITH SAMPLE PUMP AIP 22100 (SEE DRAWING M-35 FOR SAMPLE PUMP LOCATION).

LEGEND:

- EXISTING
- PROPOSED
- TO BE REMOVED

1/4"=1'-0" 1 0 1 2 3 7'

| NO. | DATE | ISSUED FOR | BY |
|---|---|---|---|

DESIGNED G.A.B.
DRAWN G.P.B.
CHECKED G.N.C.
PROJ. ENGR. G.A.B.

H. J. VIDAL P.E.
No. 37882

HAZEN AND SAWYER
Environmental Engineers & Scientists
4000 Hollywood Boulevard, Suite 750N
Hollywood, Florida 33021
Certificate of Authorization Number: 2771

SCALE 1/4"=1'-0"

CLIENTS PROJECT: –
ENGINEERS PROJECT: 44238-004
CAD REFERENCE: 44238-004BP3-M68

NORTH MIAMI FLORIDA
CITY OF NORTH MIAMI
PUBLIC WORKS UTILITIES

WINSON WATER TREATMENT PLANT
BID PACKAGE 3: WTP REHABILITATION
EXISTING FILTER CONTROL ROOM
WATER QUALITY ANALYZERS

DATE: JUNE 2014
SHEET: 129 OF 335
DRAWING: M-68

PERMITTING

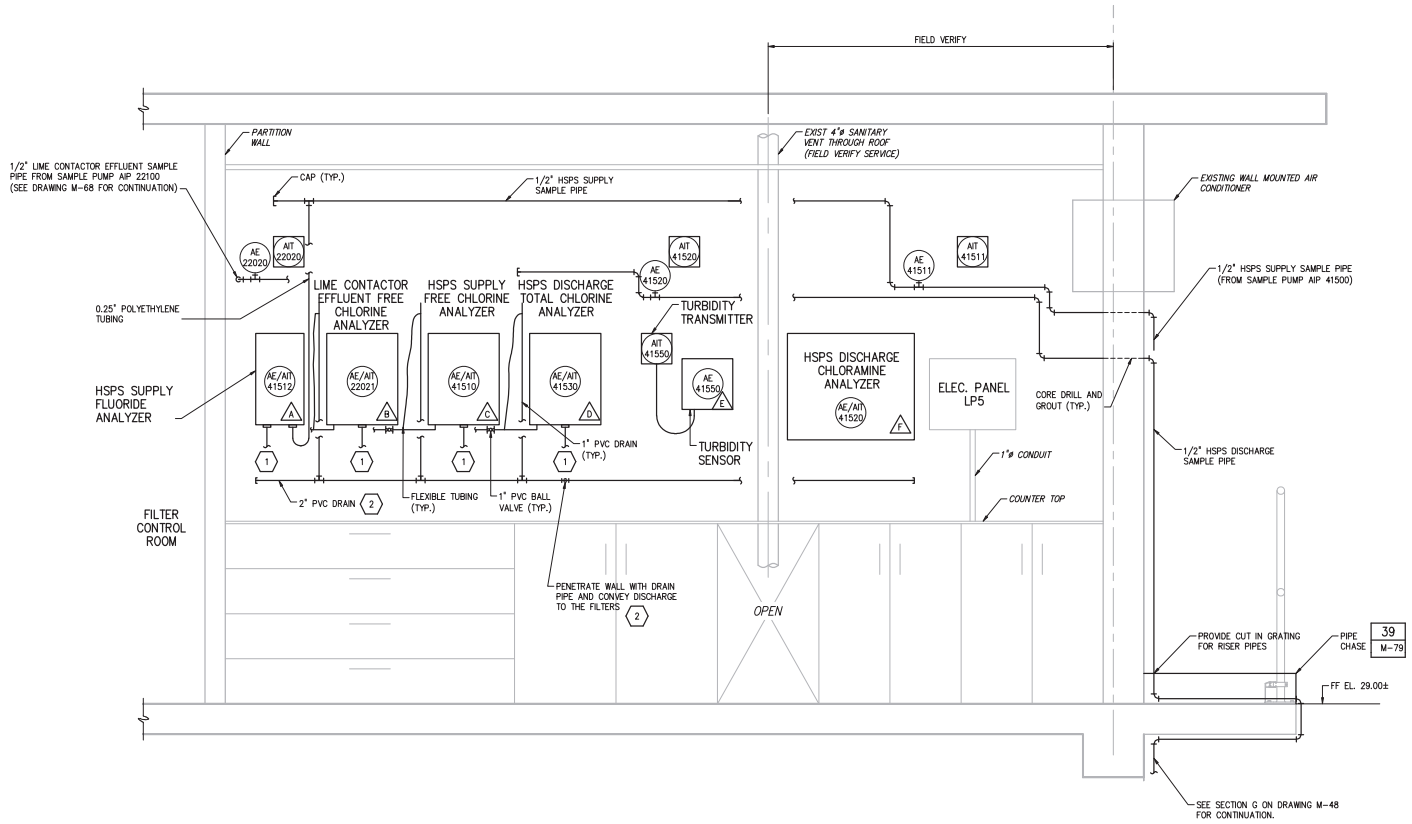


**SECTION** A / M-68
1" = 1'-0"

| SIGN SCHEDULE | |
|---|---|
| MARK | TEXT |
| A | HIGH SERVICE PUMP STATION SUPPLY FLUORIDE ANALYZER |
| B | LIME CONTACTOR EFFLUENT FREE CHLORINE ANALYZER |
| C | HIGH SERVICE PUMP STATION SUPPLY FREE CHLORINE ANALYZER |
| D | HIGH SERVICE PUMP STATION DISCHARGE TOTAL CHLORINE ANALYZER |
| E | FINISHED WATER TURBIDITY ANALYZER |
| F | HIGH SERVICE PUMP STATION DISCHARGE CHLORAMINE ANALYZER |

SIGN SCHEDULE NOTES:

1. SIGNS SHALL BE ENGRAVED PLASTIC WITH BLACK BACKGROUND AND WHITE LETTERS.
2. PROVIDE ALL NEEDED MOUNTING ACCESSORIES.
3. SIGNS ARE NOT DRAWN TO SCALE IN THE SECTION VIEW AND ARE SHOWN FOR CONCEPTUAL PURPOSES ONLY.
4. MINIMUN SIGN SIZE SHALL BE 1.5-INCHES HIGH 4-INCHES WIDE.

GENERAL NOTE:

1. NOT ALL PIPING SHOWN FOR CLARITY. INSTALL PER MANUFACTURER'S RECOMMENDATIONS.

KEYED NOTES:

1. DRAINS FROM WATER QUALITY INSTRUMENTS THAT CONTAIN REAGENT MUST BE DISPOSED OF TO SANITARY SEWER WITH AIR GAP CONNECTION. FIELD ROUTE TO NEAREST SUITABLE DRAIN.
2. DRAINS FROM WATER QUALITY PANELS THAT DO NOT CONTAIN REAGENT SHALL BE CONNECTED TO THE PROPOSED 2" PVC DRAIN AND DISCHARGED INTO THE FILTERS.
3. AS REQUIRED FOR INSTRUMENT REMOVAL.

1"=1'-0" 12" 6 0 1'

PLOT DATE: 6/10/2014 2:51 PM BY: HS

| NO. | DATE | ISSUED FOR | BY |
|---|---|---|---|

DESIGNED G.A.B.
DRAWN G.P.B.
CHECKED G.N.C.
PROJ. ENGR. G.A.B.

H. J. VIDAL P.E.
No. 37882

HAZEN AND SAWYER
Environmental Engineers & Scientists
4000 Hollywood Boulevard, Suite 750N
Hollywood, Florida 33021
Certificate of Authorization Number: 2771

SCALE 1"=1'-0"

CLIENTS PROJECT: –
ENGINEERS PROJECT: 44238-004
CAD REFERENCE: 44238-004BP3-M69

NORTH MIAMI FLORIDA
CITY OF NORTH MIAMI
PUBLIC WORKS UTILITIES

WINSON WATER TREATMENT PLANT
BID PACKAGE 3: WTP REHABILITATION
EXISTING FILTER CONTROL ROOM WATER QUALITY ANALYZERS – SECTION

DATE: JUNE 2014
SHEET: 130 OF 335
DRAWING: M-69

PERMITTING

XREFs= ..\Block\44238-004-BP3-TB,..\Base-BP3\S-BP1-Filters-Sections-X,..\Base-BP3\M-BP1-Filters-Sections

File = H:\44238-004\Drawings\Bid Package 3 - WTP Rehab\Mech\44238-004BP3-M69 Saved by tbocos Save date = 6/9/2014 6:24 PM

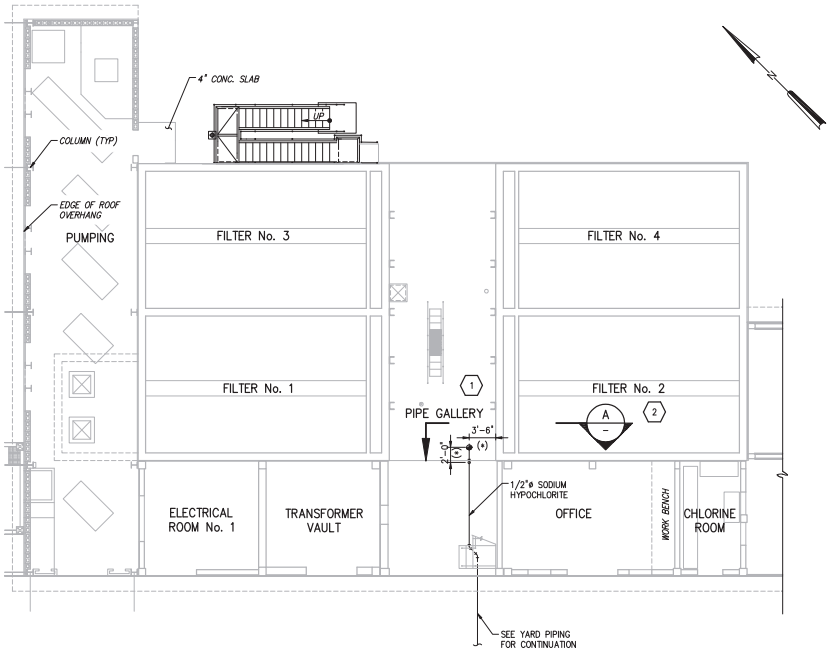


FILTER PLAN AT EL. 15.00 ±
1/8" = 1'-0"

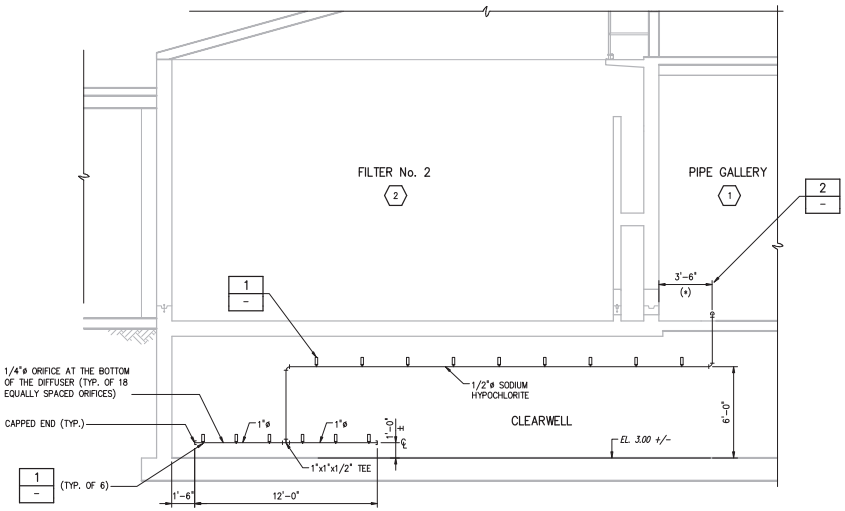


SECTION A
1/4" = 1'-0"

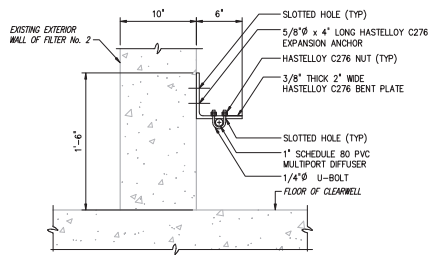


DETAIL 1
NTS

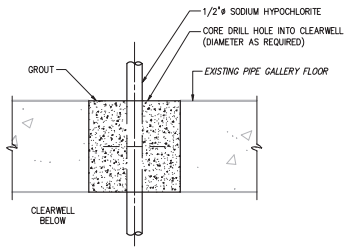


DETAIL 2
NTS

KEYED NOTES:

1. PIPE GALLERY PIPING AND EQUIPMENT NOT SHOWN FOR CLARITY.
2. MEDIA, UNDERDRAIN AND PIPING WITHIN FILTER ARE NOT SHOWN FOR CLARITY.

GENERAL NOTES:

1. ALL FILTER PIPING AND EQUIPMENT NOT SHOWN FOR CLARITY.
2. DIMENSIONS MARKED WITH AN ASTERISK (*) SHALL BE ADJUSTED IN THE FIELD WITH THE CITY TO SUIT FIELD CONDITIONS

1/4"=1'-0" (1 0 1 2 3 7')
1/8"=1'-0" (8 6 4 2 0 8')

| NO. | DATE | ISSUED FOR | BY |
|---|---|---|---|

DESIGNED G.A.B.
DRAWN C.A.Z.
CHECKED G.N.C.
PROJ. ENGR. G.A.B.

H. J. VIDAL P.E.
No. 37882

HAZEN AND SAWYER
Environmental Engineers & Scientists
4000 Hollywood Boulevard, Suite 750N
Hollywood, Florida 33021
Certificate of Authorization Number: 2771

SCALE: AS NOTED

CLIENTS PROJECT: –
ENGINEERS PROJECT: 44238-004
CAD REFERENCE: 44238-004BP3-M70

NORTH MIAMI FLORIDA
CITY OF NORTH MIAMI
PUBLIC WORKS UTILITIES

WINSON WATER TREATMENT PLANT
BID PACKAGE 3: WTP REHABILITATION
EXISTING FILTERS HYPOCHLORITE INJECTION

DATE: JUNE 2014
SHEET: 131 OF 335
DRAWING: M-70

PERMITTING

PLOT DATE: 6/10/2014 2:55 PM BY: HS

XREFs= ..\Block\44238-004-BP3-TB,..\Base-BP3\S-BP1-Filters-Plan-Bottom-X,..\Base-BP3\S-BP1-Filters-Sections-X,..\Base-BP3\S-BP3-ChemHand-Plan

File = H:\44238-004\Drawings\Bid Package 3 - WTP Rehab\Mech\44238-004BP3-M70 Saved by HScalf Save date = 6/9/2014 7:56 PM

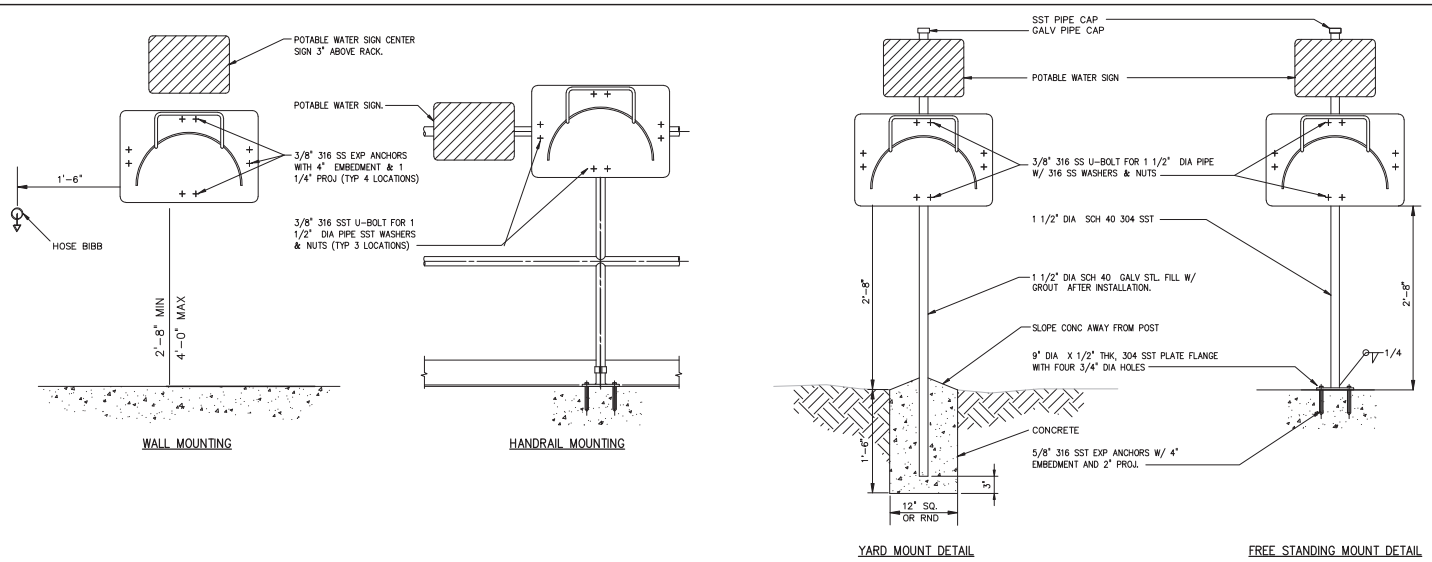


HOSE RACK MOUNTING DETAILS

**DETAIL** 1
NTS –

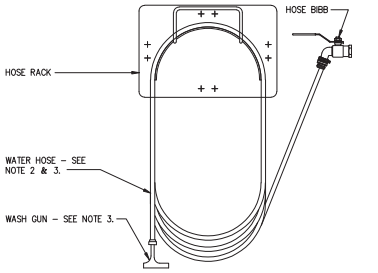


NOTES:

1. FURNISH 75' OF 3/4" ø HEAVY DUTY WATER HOSE WITH CORD BRAID REINFORCING AND FLEXIBLE NEOPRENE EXTERIOR.
2. HOSE TO BE FITTED WITH 3/4" FEMALE GN GNT FITTING ON ONE END AND 3/4" FEMALE GNT SWIVEL SPRAY NOZZLE ON FREE END. PROVIDE STAINLESS STEEL SPRING PROTECTOR ON BOTH ENDS.
3. PROVIDE LEVER ACTION WASH GUN, BRONZE BODY, SST INTERNALS, RUBBER COVERED, 150 PSI RATED. McMASTER CARR WASH GUN – #6451T57 OR EQUAL.

HOSE STATION

**DETAIL** 2
NTS –

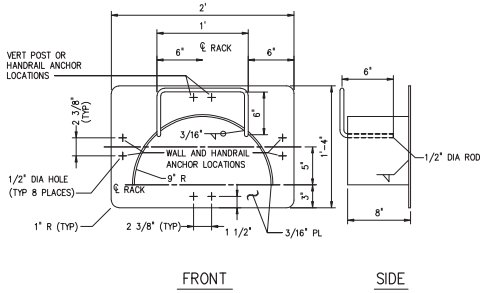


NOTES:

1. ALL MATERIAL TO BE 304 STAINLESS STEEL. ANNEAL ASSEMBLY AFTER FABRICATION.
2. CHAMFER, GRIND, DEBURR ALL METAL EDGES FOR SMOOTH CONTOUR.
3. ATTACH TO HANDRAIL WITH 316 STAINLESS STEEL U-BOLTS, NUTS AND WASHERS.

HOSE RACK

**DETAIL** 3
NTS –

| NO. | DATE | ISSUED FOR | BY |
|---|---|---|---|

DESIGNED G.A.B.
DRAWN G.P.B.
CHECKED G.N.C.
PROJ. ENGR. G.A.B.

H. J. VIDAL P.E.
No. 37882

HAZEN AND SAWYER
Environmental Engineers & Scientists
4000 Hollywood Boulevard, Suite 750N
Hollywood, Florida 33021
Certificate of Authorization Number: 2771

SCALE NTS

CLIENTS PROJECT: –
ENGINEERS PROJECT: 44238-004
CAD REFERENCE: 44238-004BP3-M71

NORTH MIAMI FLORIDA
CITY OF NORTH MIAMI
PUBLIC WORKS UTILITIES

WINSON WATER TREATMENT PLANT
BID PACKAGE 3: WTP REHABILITATION
MECHANICAL DETAILS – SHEET 1

DATE: JUNE 2014
SHEET: 132 OF 335
DRAWING: M-71

PERMITTING

PLOT DATE: 6/10/2014 2:57 PM BY: HS
XREFs= ..\Tblock\44238-004-BP3-TB
File = H:\44238-004\Drawings\Bid Package 3 - WTP Rehab\Mech\44238-004BP3-M71 Saved by HScalf Save date = 6/9/2014 7:34 PM

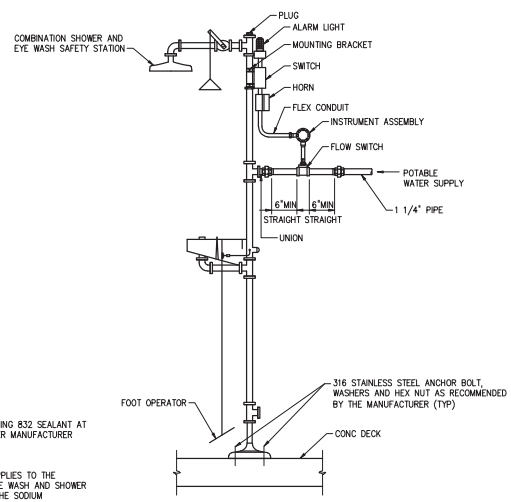


NOTE:

1. USE DOW CORNING 832 SEALANT AT PIPE JOINTS PER MANUFACTURER INSTRUCTIONS.
2. THIS DETAIL APPLIES TO THE EMERGENCY EYE WASH AND SHOWER STATIONS AT THE SODIUM HYPOCHLORITE FACILITIES AND THE CHEMICAL HANDLING FACILITY. SEE PLUMBING DRAWINGS FOR EYE WASH AND SHOWER STATIONS WITHIN THE NEW ADMINISTRATION BUILDING.

EMERGENCY EYE WASH AND SHOWER

**DETAIL** 4
NTS –

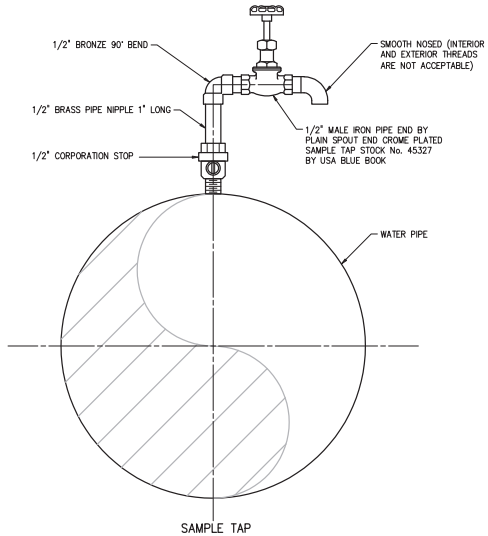


SAMPLE TAP

**DETAIL** 5
NTS –

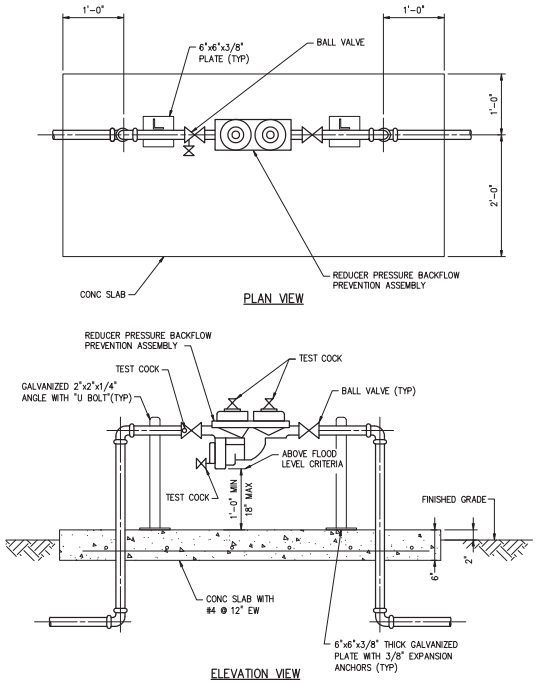


BACKFLOW PREVENTER

**DETAIL** 6
NTS –

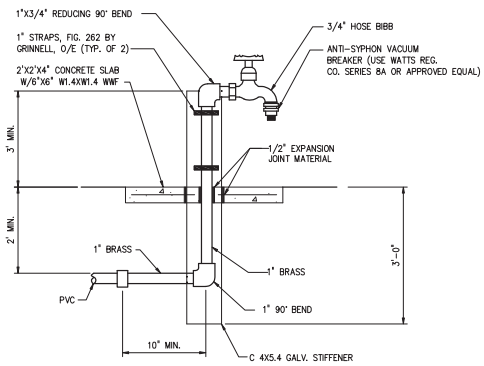


HOSE BIBB – TYPE 1

**DETAIL** 7
NTS –

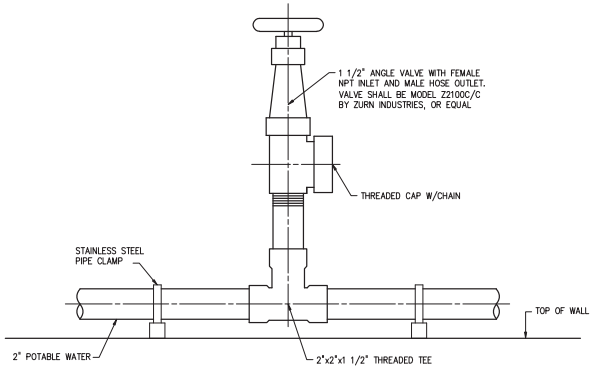


HOSE BIBB – TYPE 2

**DETAIL** 8
NTS –

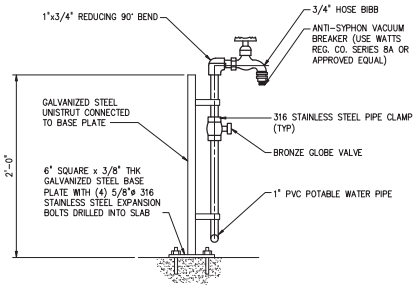


HOSE BIBB – TYPE 3

**DETAIL** 9
NTS –

| NO. | DATE | ISSUED FOR | BY |
|---|---|---|---|

DESIGNED G.A.B.
DRAWN L.M.S.
CHECKED G.N.C.
PROJ. ENGR. G.A.B.

H. J. VIDAL P.E.
No. 37882

HAZEN AND SAWYER
Environmental Engineers & Scientists
4000 Hollywood Boulevard, Suite 750N
Hollywood, Florida 33021
Certificate of Authorization Number: 2771

SCALE NTS

CLIENTS PROJECT: –
ENGINEERS PROJECT: 44238-004
CAD REFERENCE: 44238-004BP3-M72

NORTH MIAMI FLORIDA
CITY OF NORTH MIAMI
PUBLIC WORKS UTILITIES

WINSON WATER TREATMENT PLANT
BID PACKAGE 3: WTP REHABILITATION
MECHANICAL DETAILS – SHEET 2

DATE: JUNE 2014
SHEET: 133 OF 335
DRAWING: M-72

PERMITTING

PLOT DATE: 6/10/2014 3:50 PM BY: HS
XREFs= ..\Tblock\44238-004-BP3-TB
File = H:\44238-004\Drawings\Bid Package 3 - WTP Rehab\Mech\44238-004BP3-M72 Saved by HScalf Save date = 6/9/2014 8:49 PM

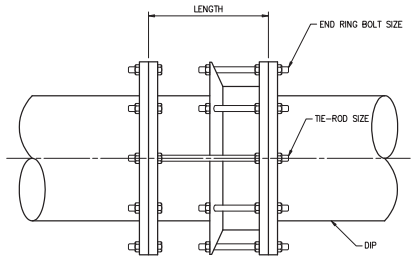


| PIPE SIZE | LENGTH | | | END RING BOLTS | | TIE RODS | | |
|---|---|---|---|---|---|---|---|---|
| | NOM. | MIN. | MAX. | QTY. | SIZE | SIZE (UNC) | LENGTH | QTY. |
| 4 | 8.00 | 7.00 | 9.00 | 4 | 5/8-11 | 5/8-11 | 13.50 | 2 |
| 6 | 8.38 | 7.38 | 9.38 | 4 | 3/4-10 | 3/4-10 | 15.00 | 2 |
| 8 | 8.38 | 7.38 | 9.38 | 4 | 3/4-10 | 3/4-10 | 15.00 | 2 |
| 10 | 10.50 | 9.50 | 11.50 | 6 | 7/8-9 | 7/8-9 | 17.75 | 2 |
| 12 | 10.50 | 9.50 | 11.50 | 6 | 7/8-9 | 7/8-9 | 17.75 | 2 |
| 14 | 13.50 | 12.00 | 15.00 | 8 | 5/8-11 | 1-8 | 22.00 | 2 |
| 16 | 13.50 | 12.00 | 15.00 | 10 | 5/8-11 | 1-8 | 22.00 | 2 |
| 18 | 13.75 | 12.25 | 15.25 | 10 | 5/8-11 | 1 1/8-7 | 23.25 | 2 |
| 20 | 13.75 | 12.25 | 15.25 | 12 | 5/8-11 | 1 1/8-7 | 23.25 | 2 |
| 24 | 14.25 | 12.75 | 15.75 | 14 | 5/8-11 | 1 1/4-7 | 25.50 | 2 |
| 30 | 14.75 | 13.25 | 16.25 | 16 | 5/8-11 | 1 1/4-7 | 25.50 | 4 |
| 36 | 15.75 | 14.25 | 17.25 | 18 | 5/8-11 | 1 1/2-6 | 27.50 | 4 |

DISMANTLING JOINT

**DETAIL** 10
NTS –

NOTES:

1. ALL FLEXIBLE COUPLINGS SHALL BE HARNESSED AND BACK BOLTED TO PREVENT MOVEMENT IN EITHER DIRECTION.
2. SEE THREADED ROD SCHEDULE FOR ROD DIAMETER, MATERIAL AND STEEL TAB THICKNESS.
3. THREADED RODS SHALL BE BOLTED TO TABS ON FLANGED PIPE JOINTS OR DUCTILE IRON HARNESS RING FACTORY WELDED TO PIPE.

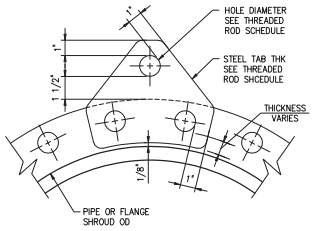


STEEL TAB

**DETAIL** 11
NTS –

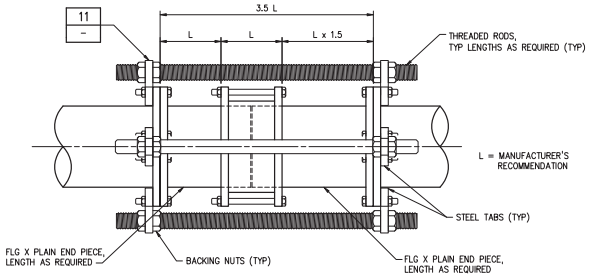


HARNESSED MECHANICAL COUPLING

**DETAIL** 12
NTS –

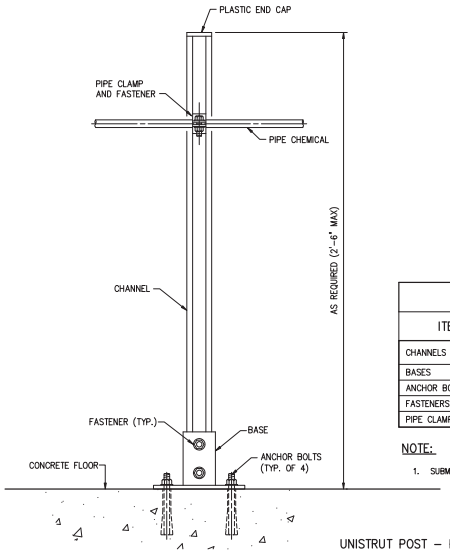


| MATERIAL OF CONSTRUCTION | | |
|---|---|---|
| ITEM | SODIUM HYPOCHLORITE | OTHER CHEMICAL SERVICES |
| CHANNELS | FRP VINYL ESTER RESIN | 316 STAINLESS STEEL |
| BASES | FRP VINYL ESTER RESIN | 316 STAINLESS STEEL |
| ANCHOR BOLTS | HASTELLOY C276 | 316 STAINLESS STEEL |
| FASTENERS | GLASS – REINFORCED POLYURETHANE | 316 STAINLESS STEEL |
| PIPE CLAMPS | GLASS – REINFORCED POLYURETHANE | 316 STAINLESS STEEL |

NOTE:

1. SUBMIT SHOP DRAWING

UNISTRUT POST – PIPE SUPPORT

**DETAIL** 13
NTS –

THREADED ROD SCHEDULE

DESIGN PRESSURE (DIMENSIONS IN INCHES)

| PIPE SIZE | 50 PSI | | 100 PSI | | 150 PSI | | 200 PSI | | 250 PSI | | 300 PSI | | 350 PSI | |
|---|---|---|---|---|---|---|---|---|---|---|---|---|---|---|
| | RODS NO-DIA | TAB THK | RODS NO-DIA | TAB THK | RODS NO-DIA | TAB THK | RODS NO-DIA | TAB THK | RODS NO-DIA | TAB THK | RODS NO-DIA | TAB THK | RODS NO-DIA | TAB THK |
| 4,6 | 2-3/4 | 1 | 2-3/4 | 1 | 2-3/4 | 1 | 2-3/4 | 1 | 2-3/4 | 1 | 2-3/4 | 1 | 2-3/4 | 1 |
| 8 | 2-3/4 | 1 1/4 | 2-3/4 | 1 1/4 | 2-3/4 | 1 1/4 | 2-3/4 | 1 1/4 | 2-3/4 | 1 1/4 | 4-3/4 | 1 1/4 | 4-3/4 | 1 1/4 |
| 10 | 2-3/4 | 1 1/4 | 2-3/4 | 1 1/4 | 2-3/4 | 1 1/4 | 4-3/4 | 1 1/4 | 4-3/4 | 1 1/4 | 4-3/4 | 1 1/4 | 4-3/4 | 1 1/4 |
| 12 | 2-3/4 | 1 1/4 | 2-3/4 | 1 1/4 | 4-3/4 | 1 1/4 | 4-3/4 | 1 1/4 | 6-3/4 | 1 1/4 | 6-3/4 | 1 1/4 | 6-3/4 | 1 1/4 |
| 14 | 2-3/4 | 1 1/2 | 4-3/4 | 1 1/2 | 4-3/4 | 1 1/2 | | | | | | | | |
| 16 | 2-3/4 | 1 1/2 | 4-3/4 | 1 1/2 | 6-3/4 | 1 1/2 | | | | | | | | |
| 18 | 2-3/4 | 1 3/4 | 4-3/4 | 1 3/4 | 6-3/4 | 1 3/4 | | | | | | | | |
| 20 | 4-3/4 | 1 3/4 | | | | | | | | | | | | |
| 24 | 4-3/4 | 2 | | | | | | | | | | | | |
| 30 | 4-1 | 2 1/4 | | | | | | | | | | | | |
| 36 | 4-1 | 2 1/2 | | | | | | | | | | | | |
| 42 | 4-1 1/4 | 2 3/4 | | | | | | | | | | | | |
| 48 | 6-1 1/4 | 2 3/4 | | | | | | | | | | | | |
| 54 | 6-1 1/4 | 3 | | | | | | | | | | | | |

1. ASSUME A DESIGN PRESSURE OF 200 PSI.
2. THREADED RODS FOR ALL PIPE DIAMETERS IN THE SHADED AREA SHALL BE ASTM A193 (GRADE B7).
3. ALL OTHER THREADED RODS SHALL BE ASTM A36. ALL TABS SHALL BE ASTM A572 GR50.
4. ASTM A193 (GRADE B7) RODS SHALL BE LABELED AND BUNDLED SEPARATELY.
5. THIS SCHEDULE SHALL APPLY FOR HARNESSED FLANGED ADAPTERS, HARNESSED FLEXIBLE COUPLINGS AND ALL MECHANICAL JOINT COUPLINGS, SLEEVES ETC. THAT ARE REQUIRED TO BE HARNESSED.
6. RODS THREADED AT ENDS (INCLUDING NUTS) SHALL BE EQUALLY SPACED AROUND PIPE BETWEEN ALL MECHANICAL JOINT FITTINGS (TEE, VALVES, BEND, PLUG, ETC.) OR AS OTHERWISE SHOWN ON THE CONTRACT DRAWINGS. THREADED RODS SHALL BE AS SHOWN IN THE THREADED ROD SCHEDULE. SEE NOTE 7
7. RODS, NUTS, ETC., IN CONTACT WITH SOIL SHALL BE PAINTED WITH TWO COATS COAL TAR (MIN 26 DRY MIL THICKNESS) TNEMEC 46-465 HI-BUILD OR EQUAL.

| NO. | DATE | ISSUED FOR | BY |
|---|---|---|---|

DESIGNED G.A.B.
DRAWN L.M.S.
CHECKED J.N.M.
PROJ. ENGR. G.A.B.

H. J. VIDAL P.E.
No. 37882

HAZEN AND SAWYER
Environmental Engineers & Scientists
4000 Hollywood Boulevard, Suite 750N
Hollywood, Florida 33021
Certificate of Authorization Number: 2771

SCALE NTS

CLIENTS PROJECT: –
ENGINEERS PROJECT: 44238-004
CAD REFERENCE: 44238-004BP3-M73

NORTH MIAMI FLORIDA
CITY OF NORTH MIAMI
PUBLIC WORKS UTILITIES

WINSON WATER TREATMENT PLANT
BID PACKAGE 3: WTP REHABILITATION
MECHANICAL DETAILS – SHEET 3

DATE: JUNE 2014
SHEET: 134 OF 335
DRAWING: M-73

PERMITTING

PLOT DATE: 6/10/2014 3:51 PM BY: HS
XREFs= ..\block\44238-004-BP3-TB
File = H:\44238-004\Drawings\Bid Package 3 - WTP Rehab\Mech\44238-004BP3-M73 Saved by HScalil Save date = 6/9/2014 7:13 PM

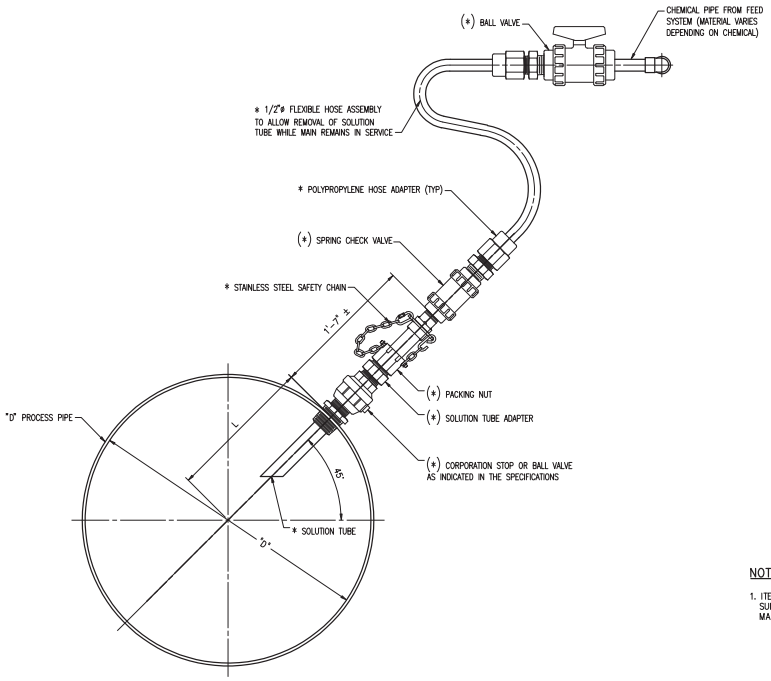


NOTES:

1. ITEMS MARKED WITH (*) INDICATE THEY ARE SUPPLIED BY THE CHEMICAL INJECTOR MANUFACTURER.

**PROPOSED CHEMICAL INJECTION ASSEMBLIES**

| CHEMICAL | INJECTION POINT DESCRIPTION | "D" PROCESS PIPE DIAMETER | "L" LENGTH OF SOLUTION TUBE INTO MAIN | SOLUTION TUBE MATERIAL | TIP CONFIGURATION | CHEMICAL PIPE DIAMETER |
|---|---|---|---|---|---|---|
| AQUEOUS AMMONIA | CHEMICAL INJECTION VAULT ON HIGH SERVICE PUMP STATION SUPPLY MANIFOLD | 30" | 12" | 316 STAINLESS STEEL | EPDM ELASTOMERIC TIP | 1/2" |
| FLUORIDE | TRANSFER PUMP DISCHARGE MANIFOLD | 24" | 8" | HASTELLOY ALLOY C276 | EPDM ELASTOMERIC TIP | 1/2" |
| SODIUM HYPOCHLORITE | 12"LIME CONTACTOR BY-PASS PIPE | 12" | 6" | CPVC | VITON ELASTOMERIC TIP | 1/2" |

CHEMICAL INJECTOR FOR PIPE

**DETAIL** 14
NTS C-32

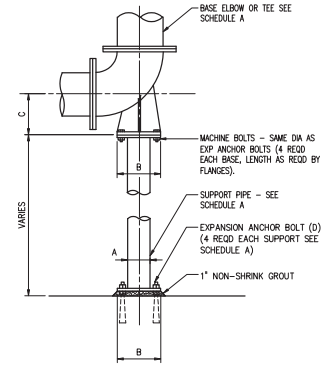


**SCHEDULE A**

BASE ELBOW (TEE) (DIM IN INCHS)

| PIPE SIZE | A | B | C | D DIA X LG |
|---|---|---|---|---|
| 3 | 1 1/2 | 5 | 4 7/8 | 1/2 X 5 |
| 4 | 2 | 6 | 5 1/2 | 5/8 X 5 |
| 5-6 | 2 1/2 | 7 | VARIES | 5/8 X 5 |
| 8-10 | 4 | 9 | VARIES | 5/8 X 5 |
| 12-16 | 6 | 11 | VARIES | 3/4 X 6 |
| 18-24 | 8 | 13 1/2 | VARIES | 3/4 X 6 |
| 30 | 10 | 16 | 23 | 7/8 X 7 |
| 36 | 12 | 19 | 26 | 7/8 X 7 |

BASE ELBOW (TEE)

**DETAIL** 15
NTS -

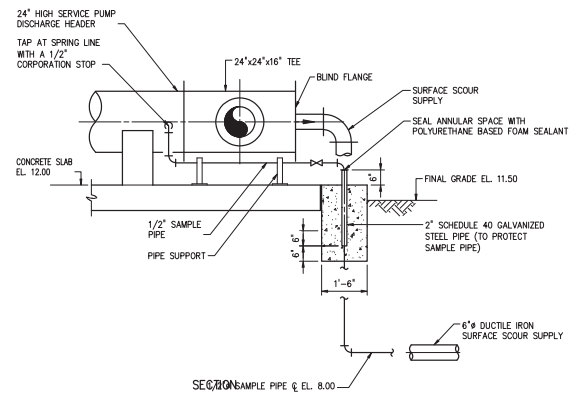


SECTION

**DETAIL** 16
NTS M-45

| NO. | DATE | ISSUED FOR | BY |
|---|---|---|---|

DESIGNED G.A.B.
DRAWN C.A.Z.
CHECKED G.N.C.
PROJ. ENGR. G.A.B.

H. J. VIDAL P.E.
No. 37882

HAZEN AND SAWYER
Environmental Engineers & Scientists
4000 Hollywood Boulevard, Suite 750N
Hollywood, Florida 33021
Certificate of Authorization Number: 2771

SCALE NTS

CLIENTS PROJECT: -
ENGINEERS PROJECT: 44238-004
CAD REFERENCE: 44238-004BP3-M74

NORTH MIAMI FLORIDA
CITY OF NORTH MIAMI
PUBLIC WORKS UTILITIES

WINSON WATER TREATMENT PLANT
BID PACKAGE 3: WTP REHABILITATION
MECHANICAL DETAILS - SHEET 4

DATE: JUNE 2014
SHEET: 135 OF 335
DRAWING: M-74

PERMITTING

PLOT DATE: 6/10/2014 3:54 PM BY: HS
XREFs= .\Tblock\44238-004-BP3-TB
File = H:\44238-004\Drawings\Bid Package 3 - WTP Rehab\Mech\44238-004BP3-M74 Saved by HScalf Save date = 6/9/2014 7:48 PM

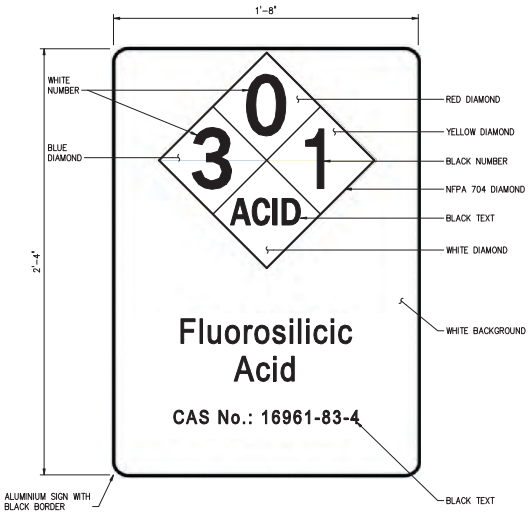


**DETAIL** 17
NTS –

**DETAIL** 18
NTS –

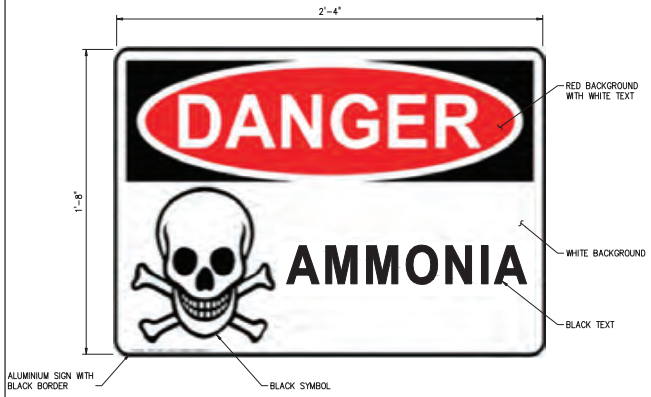


**DETAIL** 19
NTS –

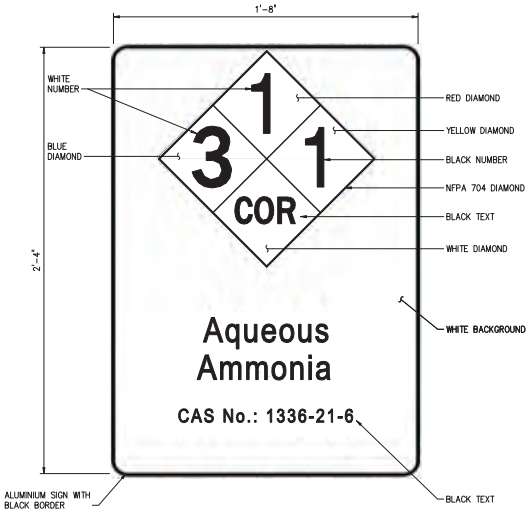


**DETAIL** 20
NTS –

**DETAIL** 21
NTS –

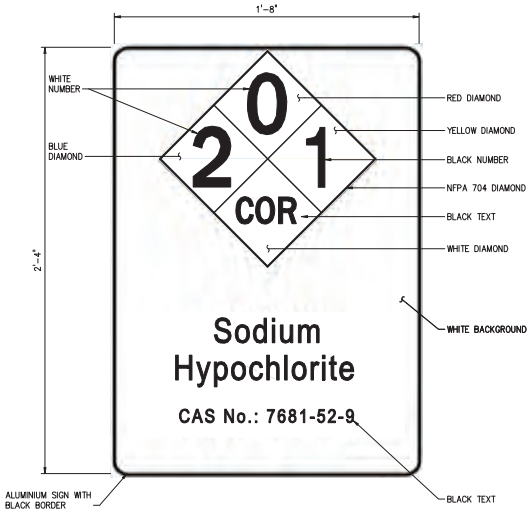


**DETAIL** 22
NTS –

| NO. | DATE | ISSUED FOR | BY |
|---|---|---|---|

DESIGNED G.A.B.
DRAWN C.A.Z.
CHECKED G.N.C.
PROJ. ENGR. G.A.B.

H. J. VIDAL P.E.
No. 37882

**HAZEN AND SAWYER**
Environmental Engineers & Scientists
4000 Hollywood Boulevard, Suite 750N
Hollywood, Florida 33021
Certificate of Authorization Number: 2771

SCALE NTS
CLIENTS PROJECT: –
ENGINEERS PROJECT: 44238-004
CAD REFERENCE: 44238-004BP3-M75

NORTH MIAMI FLORIDA
CITY OF NORTH MIAMI
PUBLIC WORKS UTILITIES

WINSON WATER TREATMENT PLANT
BID PACKAGE 3: WTP REHABILITATION
MECHANICAL DETAILS – SHEET 5

DATE: JUNE 2014
SHEET: 136 OF 335
DRAWING: M-75

PERMITTING

PLOT DATE: 6/10/2014 3:58 PM BY: HS
XREFs= ..\Tblock\44238-004-BP3-TB
File = H:\44238-004\Drawings\Bid Package 3 - WTP Rehab\Mech\44238-004BP3-M75 Saved by HSCaill Save date = 6/9/2014 6:39 PM

**DETAIL** 23
NTS –

**DETAIL** 24
NTS –

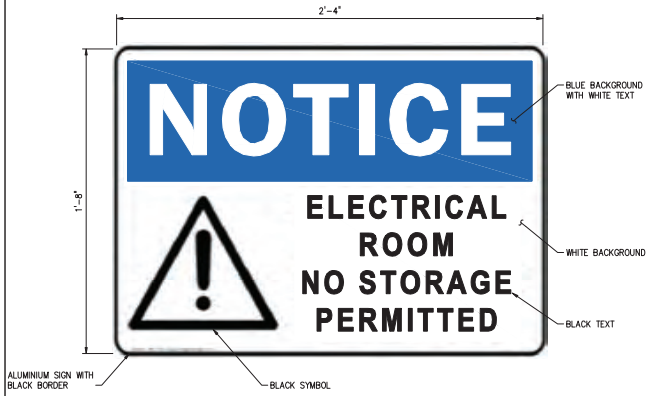


**DETAIL** 25
NTS –

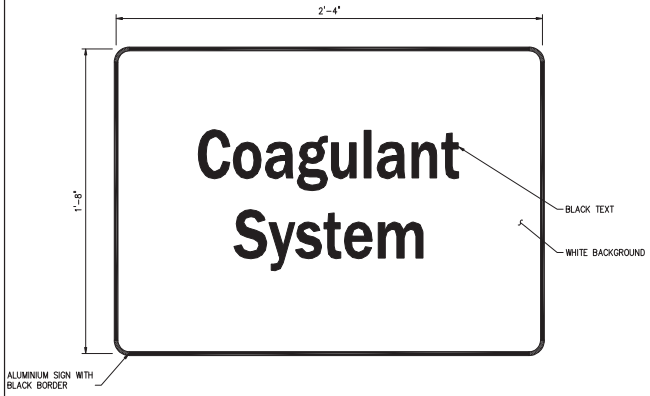


**DETAIL** 26
NTS –

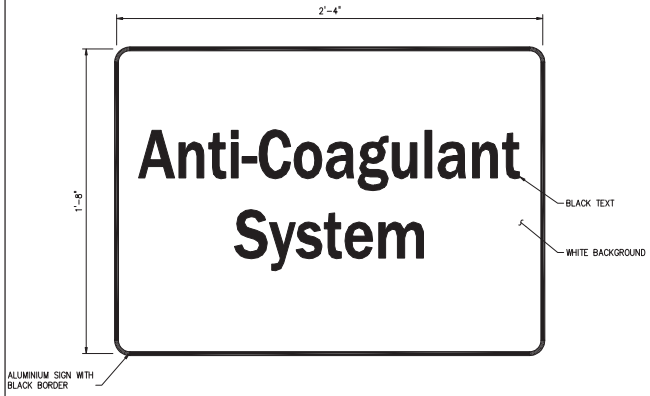


**DETAIL** 27
NTS –

| NO. | DATE | ISSUED FOR | BY |
|---|---|---|---|

DESIGNED G.A.B.
DRAWN C.A.Z.
CHECKED G.N.C.
PROJ. ENGR. G.A.B.

H. J. VIDAL P.E.
No. 37882

HAZEN AND SAWYER
Environmental Engineers & Scientists
4000 Hollywood Boulevard, Suite 750N
Hollywood, Florida 33021
Certificate of Authorization Number: 2771

SCALE NTS

CLIENTS PROJECT: –
ENGINEERS PROJECT: 44238-004
CAD REFERENCE: 44238-004BP3-M76

NORTH MIAMI FLORIDA
CITY OF NORTH MIAMI
PUBLIC WORKS UTILITIES

WINSON WATER TREATMENT PLANT
BID PACKAGE 3: WTP REHABILITATION
MECHANICAL DETAILS – SHEET 6

DATE: JUNE 2014
SHEET: 137 OF 335
DRAWING: M-76

PERMITTING

PLOT DATE: 6/10/2014 3:59 PM BY: HS
XREFs= ..\Block\44238-004-BP3-TB
File = H:\44238-004\Drawings\Bid Package 3 - WTP Rehab\Mech\44238-004BP3-M76 Saved by HScalf Save date = 6/9/2014 8:53 PM

**DETAIL** 28
NTS –

**DETAIL** 29
NTS –

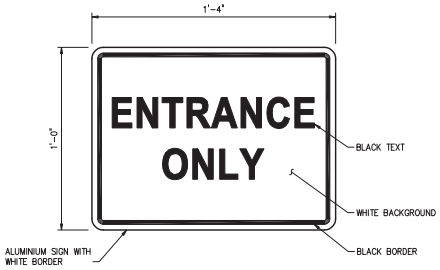


**DETAIL** 30
NTS –

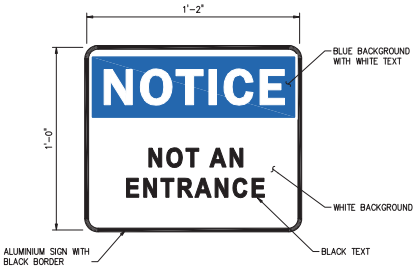


**DETAIL** 31
NTS –

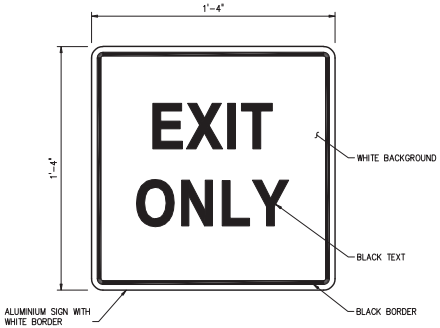


**DETAIL** 32
NTS –

| NO. | DATE | ISSUED FOR | BY |
|---|---|---|---|

DESIGNED G.A.B.
DRAWN G.P.B.
CHECKED G.N.C.
PROJ. ENGR. G.A.B.

H. J. VIDAL P.E.
No. 37882

HAZEN AND SAWYER
Environmental Engineers & Scientists
4000 Hollywood Boulevard, Suite 750N
Hollywood, Florida 33021
Certificate of Authorization Number: 2771

SCALE NTS

CLIENTS PROJECT: –
ENGINEERS PROJECT: 44238-004
CAD REFERENCE: 44238-004BP3-M77

NORTH MIAMI FLORIDA
CITY OF NORTH MIAMI
PUBLIC WORKS UTILITIES

WINSON WATER TREATMENT PLANT
BID PACKAGE 3: WTP REHABILITATION
MECHANICAL DETAILS – SHEET 7

DATE: JUNE 2014
SHEET: 138 OF 335
DRAWING: M-77

PERMITTING

PLOT DATE: 6/10/2014 3:11 PM BY: HS
XREFs= .\Tblock\44238-004-BP3-TB
File = H:\44238-004\Drawings\Bid Package 3 - WTP Rehab\Mech\44238-004BP3-M77 Saved by HScalf Save date = 6/9/2014 5:44 PM

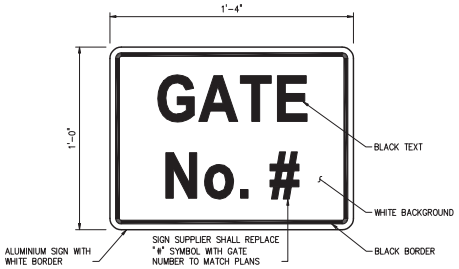


NOTES:

1. FURNISH TWO SIGNS FOR EACH EXISTING AND PROPOSED GATES.
2. INSTALL ONE SIGN ON THE EXTERIOR OF THE GATE AND ONE ON THE INTERIOR OF THE GATE.

**DETAIL** 33
NTS –

**DETAIL** 34
NTS –

**DETAIL** 35
NTS –

**DETAIL** 36
NTS –

NOTES:

1. INSTALL SIGN ABOVE OIL SMART ALARM PANEL.

**DETAIL** 37
NTS –

NOTES:

1. INSTALL SIGN NEAR ELEVATOR PIT PUMP-OUT CONNECTION WHERE DIRECTED BY THE OWNER.

| NO. | DATE | ISSUED FOR | BY |
|---|---|---|---|

DESIGNED G.A.B.
DRAWN G.P.B.
CHECKED G.N.C.
PROJ. ENGR. G.A.B.

H. J. VIDAL P.E.
No. 37882

HAZEN AND SAWYER
Environmental Engineers & Scientists
4000 Hollywood Boulevard, Suite 750N
Hollywood, Florida 33021
Certificate of Authorization Number: 2771

SCALE NTS

CLIENTS PROJECT: –
ENGINEERS PROJECT: 44238-004
CAD REFERENCE: 44238-004BP3-M78

NORTH MIAMI FLORIDA
CITY OF NORTH MIAMI
PUBLIC WORKS UTILITIES

WINSON WATER TREATMENT PLANT
BID PACKAGE 3: WTP REHABILITATION
MECHANICAL DETAILS – SHEET 8

DATE: JUNE 2014
SHEET: 139 OF 335
DRAWING: M-78

PERMITTING

PLOT DATE: 6/10/2014 3:12 PM BY: HS
XREFs= .\Tblock\44238-004-BP3-TB
File = H:\44238-004\Drawings\Bid Package 3 - WTP Rehab\Mech\44238-004BP3-M78 Saved by HScaff Save date = 6/9/2014 7:36 PM

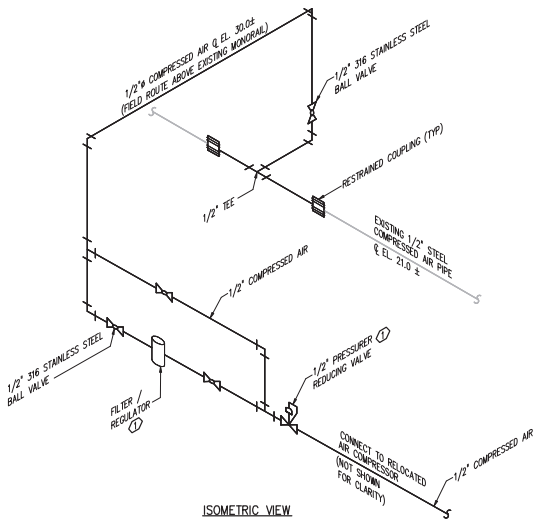


ISOMETRIC VIEW

KEYED NOTES:

1. LOCATE FILTER / REGULATOR AND PRESSURE REDUCING VALVE APPROXIMATELY 3-FEET ABOVE PUMP STATION FLOOR TO ENSURE ACCESSIBILITY FOR MAINTENANCE

DETAIL 38

**DETAIL** 38
NTS –

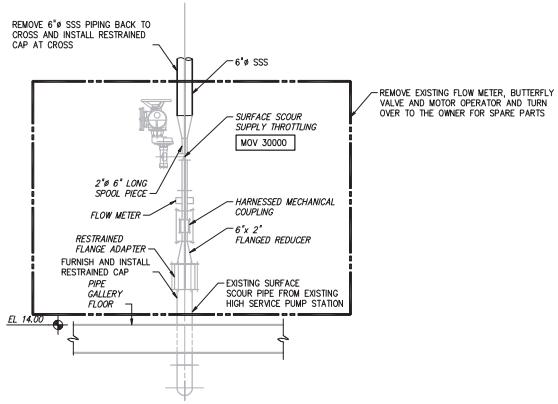


SECTION VIEW

MODIFICATION OF EXISTING SURFACE SCOUR SUPPLY THROTTLING VALVE ASSEMBLY

**DETAIL** 40
NTS –

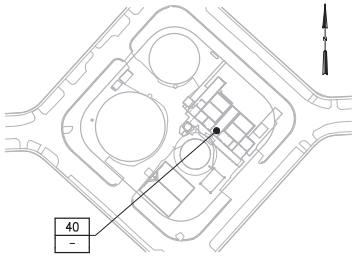


LOCATION MAP

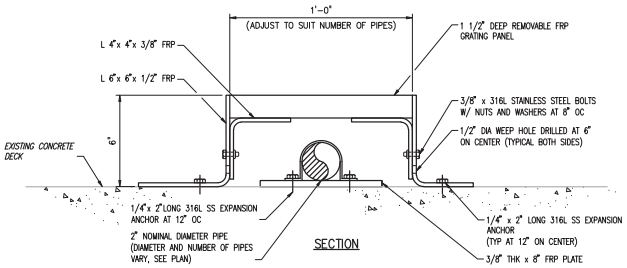


PIPE CHASE

**DETAIL** 39
NTS M-79

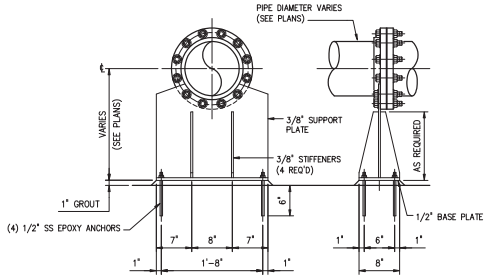


PIPE SUPPORT AT FLANGE

**DETAIL** 41
NTS –

LEGEND:

EXISTING

PROPOSED

| NO. | DATE | ISSUED FOR | BY |
|---|---|---|---|

DESIGNED G.A.B.
DRAWN G.P.B.
CHECKED G.N.C.
PROJ. ENGR. G.A.B.

H. J. VIDAL P.E.
No. 37882

HAZEN AND SAWYER
Environmental Engineers & Scientists
4000 Hollywood Boulevard, Suite 750N
Hollywood, Florida 33021
Certificate of Authorization Number: 2771

SCALE NTS

CLIENTS PROJECT: –
ENGINEERS PROJECT: 44238-004
CAD REFERENCE: 44238-004BP3-M79

NORTH MIAMI FLORIDA
CITY OF NORTH MIAMI
PUBLIC WORKS UTILITIES

WINSON WATER TREATMENT PLANT
BID PACKAGE 3: WTP REHABILITATION
MECHANICAL DETAILS
SHEET 9

DATE: JUNE 2014
SHEET: 140 OF 335
DRAWING: M-79

PERMITTING

PLOT DATE: 6/10/2014 3:12 PM BY: HS
XREFs= ..\tblock\44238-004-BP3-TB
File = H:\44238-004\Drawings\Bid Package 3 - WTP Rehab\Mech\44238-004BP3-M79 Saved by HScalf Save date = 6/9/2014 7:36 PM

## GENERAL STRUCTURAL NOTES

G-1 THESE NOTES ARE GENERAL AND SUPPLEMENT THE SPECIFICATIONS. THESE NOTES APPLY TO THE ENTIRE PROJECT UNLESS MODIFIED OR NOTED OTHERWISE IN THE CONTRACT DOCUMENTS.

G-2 STANDARD DETAILS SHALL BE USED WHEN REFERRED TO OR WHEN NO MORE RESTRICTIVE OR DIFFERENT DETAILS ARE SHOWN ON THE DRAWINGS.

G-3 DESIGN IS IN ACCORDANCE WITH AND CONSTRUCTION SHALL COMPLY WITH THE PROVISIONS OF THE FLORIDA BUILDING CODE 2010. THE DESIGN LOADS AND OTHER DESIGN VALUES GIVEN IN NOTES G-4 AND G-5 WERE USED FOR DESIGN OF STRUCTURES UNLESS NOTED OTHERWISE ON THE DRAWINGS (*1).

G-4 LIVE LOADS:

| LEVEL / STRUCTURE | ROOF | SECOND FLOOR | | BOTTOM/FIRST FLOOR | | |
|---|---|---|---|---|---|---|
| | | OFFICE BREAK ROOM CONTROL ROOM LAB TOILET | OBSERVATION DECK | OFFICE EOC LOBBY LOCKER ROOMS | MECH/ ELECTRICAL ROOM | PROCESS AREA/ CHEMICAL STORAGE |
| NEW ADMINISTRATION BUILDING | 30 PSF | 100 PSF | 100 PSF | 100 PSF | 300 PSF | – |
| HYPOCHLORITE STORAGE AND FEED FACILITY | 30 PSF | – | – | – | – | 300 PSF |

–ALL STAIRWAYS, LANDINGS AND PLATFORMS ARE DESIGNED FOR A LIVE LOAD = 100 PSF UNLESS NOTED OTHERWISE.

G-5 WIND DESIGN CRITERIA:

WIND LOADS ARE IN ACCORDANCE WITH ASCE 7 AS REFERENCED BY THE FLORIDA BUILDING CODE:

1. ADMINISTRATION BUILDING:
   RISK CATEGORY = IV
   ULTIMATE WIND SPEED = 220 MPH
   EXPOSURE CATEGORY = C
2. ALL OTHER:
   RISK CATEGORY = III
   ULTIMATE WIND SPEED = 186 MPH
   EXPOSURE CATEGORY = C

| STRUCTURE | PRESSURE COEFFICIENTS | LATERAL LOAD RESISTING SYSTEM |
|---|---|---|
| NEW ADMINISTRATION BUILDING | +/–0.18 | CONC. MOMENT FRAME |
| HYPOCHLORITE STORAGE AND FEED FACILITY | OPEN BLDG | STEEL FRAME |

BUILDING COMPONENTS AND CLADDING SHALL BE DESIGNED FOR THE CONDITIONS SPECIFIED IN ASCE 7 IN COMPLIANCE WITH THE DESIGN PARAMETERS SPECIFIED ABOVE. EQUIPMENT AND PRODUCT VENDORS SHALL COMPLY WITH THE DESIGN PARAMETERS SPECIFIED ABOVE FOR OUTDOOR EQUIPMENT.

G-6 ALL DIMENSIONS INDICATED (*) SHALL BE VERIFIED EITHER BY FIELD MEASUREMENTS FOR EXISTING STRUCTURES OR BY SHOP DRAWINGS FOR EQUIPMENT FURNISHED. STRUCTURAL DIMENSIONS NOT SHOWN BUT CONTROLLED BY OR RELATED TO EQUIPMENT SHALL BE VERIFIED BY THE CONTRACTOR WITH THE MANUFACTURER PRIOR TO CONSTRUCTION.

G-7 THE CONTRACTOR IS RESPONSIBLE FOR VERIFYING ALL EXISTING INFORMATION IN THE FIELD AS REQUIRED FOR NEW WORK

G-8 IF A CONFLICT IS FOUND BETWEEN DIFFERENT PORTIONS OF THE CONTRACT DOCUMENTS, THE CONTRACTOR SHALL NOTIFY THE ENGINEER IMMEDIATELY. CONTINUED CONSTRUCTION OF THE AREA IN CONFLICT SHALL BE AT THE CONTRACTOR'S OWN RISK UNTIL THE CONFLICT IS RESOLVED.

G-9 EQUIPMENT ANCHOR BOLT SIZES, TYPES, EMBEDMENT AND PATTERNS SHALL BE VERIFIED WITH THE MANUFACTURER. ALL BOLT PATTERNS SHALL BE TEMPLATED TO INSURE ACCURACY OF PLACEMENT.

G-10 STRUCTURAL DRAWINGS SHALL BE USED IN COORDINATION WITH THE DRAWINGS OF ALL OTHER DISCIPLINES AND MANUFACTURER'S SHOP DRAWINGS.

G-11 STRUCTURES HAVE BEEN DESIGNED FOR OPERATIONAL LOADS ON THE COMPLETED STRUCTURE. DURING CONSTRUCTION, THE STRUCTURES SHALL BE PROTECTED BY BRACING AND TEMPORARY SUPPORTS WHEREVER EXCESSIVE CONSTRUCTION LOADS MAY OCCUR. OVERSTRESSING OF ANY STRUCTURAL ELEMENT IS PROHIBITED.

G-12 NO BACKFILL SHALL BE PLACED AGAINST ANY SUBSTRUCTURE WALLS UNLESS ALL ADJACENT SUPPORTING ELEMENTS HAVE ACHIEVED DESIGN STRENGTH, OR WALLS HAVE BEEN PROPERLY BRACED, AND IN ANY CASE NOT SOONER THAN 28 DAYS AFTER THE PLACING OF CONCRETE UNLESS APPROVED BY THE ENGINEER. SUPPORTING ELEMENTS SHALL INCLUDE ADJACENT WALLS, SLABS, BEAMS AND COLUMNS.

G-13 LEAKAGE TESTING OF HYDRAULIC STRUCTURES SHALL NOT BEGIN UNTIL ALL STRUCTURAL ELEMENTS HAVE REACHED THE SPECIFIED MINIMUM CONCRETE STRENGTH. BACKFILL SHALL NOT BE PLACED AROUND ANY HYDRAULIC STRUCTURE UNTIL THE LEAKAGE TEST HAS BEEN COMPLETED.

## STRUCTURAL METALS

M-1 DETAIL, FABRICATE, AND ERECT STRUCTURAL STEEL IN ACCORDANCE WITH AISC SPECIFICATION FOR STRUCTURAL STEEL BUILDINGS, AISC 360-05.

M-2 STEEL MATERIAL:
A) STRUCTURAL TUBING: ASTM A500, GRADE B OR A501 (42 KSI)
B) STRUCTURAL PIPE: ASTM A53, TYPE E OR S, GRADE B (35 KSI)
C) PLATES AND BARS: ASTM A36 UNO (36 KSI)
D) STRUCTURAL W SHAPES: ASTM A992 (50 KSI)
E) STRUCTURAL S, M, C, & L SHAPES: ASTM A36 (36 KSI)
F) STRUCTURAL HP SHAPES: ASTM A 572, GRADE 50 (50 KSI)

M-3 PROVIDE MINIMUM 3/4" DIAMETER ASTM A325 HIGH STRENGTH BOLTS WITH FULLY TIGHTENED TYPE N CONNECTIONS FOR STRUCTURAL STEEL UNLESS NOTED OTHERWISE.

M-4 PROVIDE TYPICAL STEEL BEAM CONNECTIONS FOR A CAPACITY OF NOT LESS THAN THE TOTAL UNIFORM LOAD CAPACITY TABULATED IN THE AISC TABLES FOR ALLOWABLE LOADS OF BEAMS UNLESS NOTED OTHERWISE.

M-5 DO NOT PAINT STEEL SURFACES WHICH ARE TO BE WELDED OR ARE TO BE ENCASED IN CONCRETE.

M-6 ALL STAINLESS STEEL FABRICATIONS SHALL BE TYPE 316, UNLESS NOTED OTHERWISE.

M-7 ALUMINUM SHALL BE ALLOY 6061-T6 UNLESS NOTED OTHERWISE.

M-8 ALL BOLTS, ANCHOR BOLTS, AND CONCRETE ANCHORS CONNECTING ALUMINUM SHALL BE TYPE 316 STAINLESS STEEL.

M-9 DETAIL, FABRICATE, AND ERECT ALUMINUM IN ACCORDANCE WITH THE LATEST EDITION OF THE ALUMINUM ASSOCIATION ALUMINUM DESIGN MANUAL.

M-10 ALUMINUM SHALL BE ISOLATED FROM CONTACT WITH CONCRETE AND DISSIMILAR METALS.

M-11 ALL GROOVE AND BUTT WELDS SHALL BE FULL PENETRATION.

M-12 FILLET WELD SIZES SHALL BE THE MINIMUM SIZE REQUIRED BY AISC CODE FOR PLATE SIZES TO BE CONNECTED AND SHALL BE APPLIED TO THE ENTIRE JOINT CONTACT LENGTH, BUT NOT LESS THAN 3/16".

M-13 BOTTOM SURFACES OF BASE PLATES SHALL BE GROUTED TO INSURE FULL BEARING CONTACT WITH CONCRETE SLAB.

M-14 WHENEVER ONE MEMBER IS FASTENED TO ANOTHER WITH FASTENINGS (BOLTS, WELDS, ETC.) SET AT A UNIFORM SPACING, THERE SHALL BE A MINIMUM OF TWO FASTENINGS PER PIECE CONNECTED AND THE FIRST AND LAST FASTENINGS SHALL BE LOCATED NOT TO EXCEED 0.25 OF FASTENER SPACING FROM EACH END.

M-15 BOLTED CONNECTIONS SHALL BE ASSEMBLED AND INSPECTED IN ACCORDANCE WITH RCSC SPECIFICATIONS FOR STRUCTURAL JOINTS USING ASTM A325 OR ASTM A490 BOLTS.

M-16 STRUCTURAL WELDED JOINTS SHALL CONFORM TO THE PROVISIONS OF AWS D1.1, STRUCTURAL WELDING CODE BY AMERICAN WELDING SOCIETY. PROOF OF WELDER CERTIFICATION SHALL BE AVAILABLE AT THE JOB SITE DURING TIMES OF INSPECTION.

M-17 SPECIAL PERIODIC AND CONTINUOUS INSPECTIONS SHALL BE IN ACCORDANCE WITH SPECIFICATIONS AND THE BUILDING CODE.

## FOUNDATIONS

F-1 CONCRETE (CAST-IN-PLACE) NOTES APPLY TO FOUNDATIONS.

F-2 ALLOWABLE SOIL BEARING PRESSURE

| STRUCTURE | ALLOWABLE SOIL BEARING PRESSURE |
|---|---|
| NEW ADMINISTRATION BUILDING | 3000 PSF |
| HYPOCHLORITE STORAGE AND FEED FACILITY | 3000 PSF |

F-3 SET BOTTOM OF FOUNDATIONS AT ELEVATIONS SHOWN ON DRAWINGS

F-4 SOFT OR LOOSE SOILS MAY BE ENCOUNTERED DURING EARTHWORK OPERATIONS, REQUIRING ADDITIONAL UNDERCUTTING AND FILL. REFER TO GEOTECHNICAL REPORT FOR DETAILED SOIL STRATIFICATION.

F-5 GROUNDWATER CONTROL MAY BE REQUIRED DURING CONSTRUCTION. REFER TO GEOTECHNICAL REPORT FOR BORINGS.

F-6 ALL STRUCTURES DESIGNED FOR SEASONAL HIGH GROUNDWATER ELEVATION OF 4.

## CONCRETE (CAST-IN-PLACE)

C-1 DESIGN OF CONCRETE ELEMENTS INCLUDING WALLS, FORMED SLABS, BEAMS, AND COLUMNS IS IN ACCORDANCE WITH ACI 318 (CODE REQUIREMENTS FOR STRUCTURAL CONCRETE) AND 350 (CODE REQUIREMENTS FOR ENVIRONMENTAL ENGINEERING CONCRETE STRUCTURES).

C-2 FOR CONCRETE MIX DESIGN SEE SPECIFICATION SECTION 03300.

C-3 CONCRETE STRENGTH CLASSES (28-DAY COMPRESSIVE STRENGTH):
A) CLASS A – (4,000 PSI) CLASS A STRUCTURAL CONCRETE SHALL BE USED IN ALL STRUCTURES UNLESS NOTED OTHERWISE.
B) CLASS B – (4,000 PSI) CLASS B STRUCTURAL CONCRETE SHALL BE USED AT LOCATIONS SHOWN OR APPROVED ON A CASE BY CASE BASIS.
C) CLASS C – (3,000 PSI) CLASS C CONCRETE SHALL BE USED IN ALL CURBS, GUTTERS, CATCH BASINS, FENCE AND GUARD POST EMBEDMENTS, ENCASEMENTS, AND ALL OTHER CONCRETE APPURTENANT TO ELECTRICAL FACILITIES UNLESS NOTED OTHERWISE. CLASS C CONCRETE SHALL ALSO BE USED FOR THRUST BLOCKS, PIPE TRENCH CUT-OFF BLOCKS AND CRADLES, MUDMATS AND CONCRETE FILLS WHERE THEY ARE UNREINFORCED.

C-4 ALL BAR REINFORCING SHALL CONFORM TO ASTM A615, GRADE 60, OR ASTM A706, GRADE 60 WHERE REINFORCEMENT IS TO BE WELDED IN ACCORDANCE WITH AWS D1.4. WELDED WIRE FABRIC SHALL CONFORM TO ASTM A185.

C-5 CONCRETE COVER FOR REINFORCING (UNLESS NOTED OTHERWISE ON THE DRAWINGS):
A) CONCRETE DEPOSITED DIRECTLY AGAINST SOIL: 3"
B) FORMED CONCRETE EXPOSED TO EARTH OR WEATHER
1. SLABS (#5 OR SMALLER) 1 1/2"
2. SLABS (#6 OR LARGER) 2"
3. WALLS 12" OR MORE 2"
4. WALLS LESS THAN 12" (#5 OR SMALLER) 1 1/2"
5. WALLS LESS THAN 12" (#6 OR LARGER) 2"
6. BEAMS AND COLUMNS (TO MAIN REINFORCEMENT) 2"
7. BEAMS AND COLUMNS (TO TIES OR STIRRUPS) 1 1/2"
8. FOR SURFACES EXPOSED TO WATER OR SEWAGE, ADD 1/2" TO ABOVE

C-6 SPLICES SHALL BE CLASS 'B' CONFORMING TO THE PROVISIONS OF ACI 318 UNLESS NOTED OTHERWISE.

C-7 CONSTRUCTION JOINTS SHALL BE LOCATED AS SHOWN ON THE DRAWINGS. CONSTRUCTION JOINTS NOT SHOWN SHALL BE SUBMITTED BY THE CONTRACTOR FOR THE APPROVAL OF THE ENGINEER PRIOR TO SUBMITTING REBAR SHOP DRAWINGS. VERTICAL CONSTRUCTION JOINTS IN WALLS AND HORIZONTAL JOINTS IN SLABS SHALL BE PROVIDED AT A SPACING NOT GREATER THAN 45 FEET ON CENTER. FOR EXPOSED WALLS WITH FLUID OR EARTH ON THE OPPOSITE SIDE, THE SPACING BETWEEN VERTICAL JOINTS SHALL BE A MAXIMUM OF 25 FEET.

C-8 WHERE HORIZONTAL CONSTRUCTION JOINTS, LOCATED ABOVE THE FOUNDATION SLAB, EXTEND BEYOND WHERE NEEDED, THEY SHALL BE TERMINATED AT A VERTICAL CONSTRUCTION JOINT APPROVED BY THE ENGINEER.

C-9 ALL JOINTS WHICH ARE IN MEMBERS IN CONTACT WITH LIQUID OR BELOW GRADE SHALL HAVE A WATERSTOP. CONSTRUCTION JOINTS SHALL HAVE A 6" PVC RIBBED WATERSTOP. EXPANSION JOINTS SHALL HAVE A 9" PVC CENTERBULB RIBBED WATERSTOP. IN VERTICAL JOINTS, WATERSTOPS SHALL TERMINATE NO LESS THAN 18" ABOVE THE MAXIMUM WATER SURFACE OR 18" ABOVE GRADE, WHICHEVER IS HIGHER.

C-10 SLABS WITH SLOPING SURFACES SHALL HAVE THE INDICATED SLAB THICKNESS MAINTAINED AS THE MINIMUM. SLAB BOTTOMS CAN EITHER SLOPE WITH THE TOP SURFACE OR BE LEVEL. REINFORCEMENT IN SLABS WITH SLOPING SURFACES SHALL BE PLACED AT THE REQUIRED CLEARANCE FROM THE SLAB SURFACE.

C-11 ALL EXPOSED CORNERS SHALL HAVE A 3/4" CHAMFER OR A 1/2" RADIUS TOOLED CORNER.

C-12 EQUIPMENT SUPPORTS, ANCHORAGES, OPENINGS, RECESSES AND REVEALS NOT SHOWN ON THE STRUCTURAL DRAWINGS BUT REQUIRED BY OTHER CONTRACT DOCUMENTS, SHALL BE PROVIDED FOR PRIOR TO PLACING CONCRETE.

C-13 REINFORCING BARS AND ACCESSORIES SHALL NOT BE IN CONTACT WITH ANY METAL PIPE, PIPE FLANGE, METAL CONDUIT, OR OTHER METAL PARTS EMBEDDED IN CONCRETE. A MINIMUM CLEARANCE OF 2" SHALL BE PROVIDED.

C-14 DOWELS, ANCHOR BOLTS, PIPES, WATERSTOPS AND OTHER EMBEDDED ITEMS SHALL BE HELD SECURELY IN POSITION WHILE CONCRETE IS BEING PLACED.

C-15 CONDUITS AND OTHER SIMILAR ITEMS EMBEDDED IN OR PENETRATING THROUGH CONCRETE SHALL BE SPACED ON CENTER NOT LESS THAN 3 TIMES THEIR OUTSIDE DIMENSION, BUT NOT LESS THAN 2 1/2" CLEAR. WHEN SUCH ITEMS ARE EMBEDDED IN WALLS OR SLABS, THEY SHALL NOT OCCUPY MORE THAN 1/3 OF THE MEMBER THICKNESS.

C-16 AT ALL TYPICAL CURBS, EQUIPMENT PADS, AND PIPE SUPPORT PIERS, REINFORCING DOWELS SHOWN MAY BE REPLACED WITH MATCHING DOWELS SET IN EPOXY IN DRILLED HOLES AS SPECIFIED. DOWELS LOCATED CLOSER THAN 3" FROM ANY EDGE OF CONCRETE SHALL NOT BE REPLACED WITH DRILLED DOWELS.

C-17 DRILLED ADHESIVE DOWELS (WHERE DOWELS ARE SHOWN TO BE PLACED INTO HARDENED CONCRETE):
A) THE HOLE DIAMETER SHALL BE NO LARGER THAN 1/8" GREATER THAN THE DIAMETER OF THE REINFORCING BAR AT THE DEFORMATIONS.
B) THE DEPTH OF EMBEDMENT SHALL BE 12 BAR DIAMETERS, UNLESS NOTED OTHERWISE.
C) ADJUST THE DOWEL LOCATIONS AS NEEDED TO AVOID DRILLING THROUGH ANY REINFORCING BARS. IF THE LOCATION NEEDS TO BE MODIFIED, CONTACT THE ENGINEER.

C-18 CLEAR DISTANCE FROM ANCHOR BOLTS TO ANY CONCRETE EDGE SHALL BE 4" MINIMUM UNLESS NOTED OTHERWISE.

## CONCRETE BLOCK MASONRY WALLS:

W-1 ALL REGULAR MASONRY WALLS USED AS FILLER BETWEEN CONCRETE FRAMED STRUCTURE AND/OR MASONRY LOAD BEARING WALLS WITH REINFORCING SHALL BE TWO CELL LOAD BEARING TYPE CMU WITH f'm = 1,500 P.S.I. (MIN.), UNLESS NOTED OTHERWISE ON THE PLANS.

W-2 MASONRY MORTAR SHALL BE ASTM C270 TYPE "M" AND MASONRY GROUT SHALL CONFORM TO THE REQUIREMENTS OF ASTM A615 FOR GRADE 60 BILLET STEEL.

W-3 MASONRY JOINT REINFORCEMENT SHALL CONFORM TO ASTM A82 AND REINFORCEMENT STEEL SHALL CONFORM TO REQUIREMENTS OF ASTM A615 FOR GRADE 60 BILLET STEEL.

W-4 MASONRY REINFORCEMENT BAR SPLICES SHALL BE CONTACT SPLICES. LENGTH OF SPLICE SHALL BE A MINIMUM OF 25 INCHES FOR #4 BARS, 32 INCHES FOR #5 BARS, AND 39" FOR #6 BARS.

W-5 BOND BEAM REINFORCEMENT SHALL BE PROVIDED WITH STD 90 DEGREE HOOKS AT ALL WALL INTERSECTIONS. WHERE BOND BEAM REINFORCEMENT IS INTERRUPTED BY OPENINGS, REINFORCEMENT SHALL BE PROVIDED WITH STD 180 DEGREE HOOKS AT ENDS.

W-6 A FLORIDA REGISTERED ARCHITECT OR PROFESSIONAL ENGINEER SHALL FURNISH INSPECTION OF ALL REINFORCED MASONRY STRUCTURES

## MASONRY LINTELS:

L-1 MASONRY LINTELS SHALL BE EITHER PRECAST CONCRETE "U" SECTIONS OR CONCRETE MASONRY "U" BLOCK.

L-2 NOMINAL DEPTH OF "U" SECTIONS BE 8" AND WIDTH SHALL MATCH CONCRETE MASONRY WALL.

L-3 PRECAST CONCRETE "U" SECTIONS SHALL BE REINFORCED WITH 2 #3 TOP AND 2 #5 BOTTOM. ADDITIONAL FIELD ADDED KEY REINFORCEMENT AND TOTAL NOMINAL DEPTH SHALL BE AS FOLLOWS:

| SPAN | TOTAL NOMINAL LINTEL DEPTH (IN) | FIELD ADDED REINFORCEMENT |
|---|---|---|
| UP TO 4'-0" | 8 | NONE |
| UP TO 8'-0" | 8 | 1-#5 BOTTOM. 1 #5 TOP |
| UP TO 12'-0" | 16 | 1-#5 BOTTOM. 2 #5 TOP |

ADDITIONAL LINTEL DEPTH SHALL BE 8" DEEP CONCRETE MASONRY BLOCK.

L-4 CONCRETE MASONRY "U" BLOCK LINTELS SHALL HAVE THE FOLLOWING REINFORCEMENT AND TOTAL NOMINAL DEPTH.

| SPAN | TOTAL NOMINAL LINTEL DEPTH (IN) | FIELD ADDED REINFORCEMENT |
|---|---|---|
| UP TO 4'-0" | 8 | 2-#5 BOTTOM |
| UP TO 8'-0" | 16 | 2-#5 BOTTOM |
| UP TO 12'-0" | 24 | 2-#5 BOTTOM |

ADDITIONAL LINTEL DEPTH SHALL BE 8" DEEP CONCRETE MASONRY BLOCK.

L-5 LINTELS SHALL BE GROUTED SOLID.

L-6 EXTEND LINTELS (MIN) 8" BEYOND OPENING.

L-7 WHEN FRAMING LINTEL AGAINST A CONCRETE COLUMN, PROVIDE SHEAR KEY AT COLUMN FACE AND DOWELS FROM COLUMN TO MATCH MASONRY LINTEL REINFORCEMENT. KEY DIMENSION SHALL BE 1"x8"x8" MINIMUM REINFORCEMENT LAP SHALL BE 32 BAR DIAMETER.

## DEMOLITION

D-1 FOR DEMOLITION REQUIREMENTS, REFER TO SPECIFICATION 02050 – DEMOLITION AND REMOVAL OF EXISTING STRUCTURES AND EQUIPMENT.

D-2 CONCRETE DEMOLITION WITHIN STRUCTURES BEING MODIFIED SHALL BE SELECTIVE DEMOLITION BY CORE DRILLING OR SAWCUTTING AND CAREFUL REMOVAL OF CONCRETE SHOWN TO BE REMOVED. NO OVER CUTTING OF AREAS TO BE DEMOLISHED SHALL BE PERMITTED. CONTRACTOR SHALL CORE DRILL CORNERS OF OPENING PRIOR TO SAWCUTTING. EXPLOSIVES AND VIBRATORY HAMMERS SHALL NOT BE USED FOR DEMOLITION WORK.

D-3 UNLESS ANCHORING DEVICES AND/OR REINFORCEMENT IS NOTED TO REMAIN FOLLOWING DEMOLITION, REMOVE AND/OR BURN BACK ANCHORS AND REINFORCEMENT STEEL 1/2" MIN BELOW SURFACE. VOIDS CREATED SHALL BE FILLED WITH EPOXY RESIN BINDER.

D-4 WHERE DRAWINGS INDICATE A CONCRETE EQUIPMENT PAD TO BE DEMOLISHED, THE FLOOR SLAB SURFACE SHALL BE REPAIRED AS APPROVED BY ENGINEER. FOLLOWING SELECT DEMOLITION AND REMOVAL OF THE EQUIPMENT PAD REMOVAL THE REPAIR SHALL BE:
A. SAWCUT THE FLOOR AROUND THE EQUIPMENT PAD PERIMETER TO A DEPTH OF 1/4'.'.
B. SCARIFY AND REMOVE SLAB CONCRETE WITHIN THE PERIMETER TO A NOMINAL 1/4" DEPTH CLEAN AND REMOVE ALL CONCRETE LAITANCE.
C. RESURFACE THE AREA BY APPLYING A POLYMER MODIFIED OR SILICA FUME ENHANCED CEMENTITIOUS REPAIR MORTAR, APPROVED BY THE ENGINEER, FOLLOWING THE MANUFACTURER'S SURFACE PREPARATION AND APPLICATION RECOMMENDATIONS. LEVEL AND FINISH THE SURFACE TO MATCH THE FLOOR SLAB SURROUNDING AREA.

D-5 CONCRETE SURFACES LEFT EXPOSED FOLLOWING DEMOLITION SHALL BE SEALED WITH EPOXY RESIN COATING SUCH AS "SIKAGARD" BY SIKA CORPORATION, "DURACOTE 240" BY TAMMS INDUSTRIES, OR APPROVED EQUAL.

D-6 A DETAILED CONSTRUCTION AND DEMOLITION PLAN SHALL BE SUBMITTED TO THE ENGINEER AND APPROVED BY THE ENGINEER AND COUNTY PRIOR TO BEGINNING CONSTRUCTION. ANY SHUTDOWNS SHALL BE SUBMITTED TO COORDINATED WITH AND APPROVED BY THE OWNER. ONCE APPROVED, CONTRACTOR SHALL PROVIDE A MINIMUM OF 14 DAYS NOTICE TO OWNER PRIOR TO SHUTDOWN.

## EXISTING INFORMATION

X-1 ALL EXISTING INFORMATION SHOWN ON THESE DRAWINGS INCLUDING LOCATION, DIMENSIONS, ELEVATIONS, AND CONFIGURATIONS IS DERIVED FROM RECORD DRAWINGS "CITY OF NORTH MIAMI, FLORIDA-PROJECT No. 1203-H AND H.F.A. PROJECT No. APW-FLA-306 WEST SIDE WATER TREATMENT PLANT, 1962" BY INTERSTATE ENGINEERING CO, INC. PROVIDED BY THE CITY AND IS NOT GUARANTEED TO BE COMPLETE OR CORRECT. RECORD DRAWINGS ARE AVAILABLE FOR REVIEW AT THE CITY'S OFFICES.

X-2 ELEVATIONS IN RECORD DRAWINGS ARE BASED ON THE NATIONAL GEODETIC VERTICAL DATUM OF 1929. ELEVATIONS ON THESE DRAWINGS ARE BASED ON THE NATIONAL GEODETIC VERTICAL DATUM OF 1929.

## SPECIAL INSPECTIONS

SI-1 SPECIAL PERIODIC AND CONTINUOUS INSPECTIONS SHALL BE IN ACCORDANCE WITH SPECIFICATIONS AND THE FLORIDA BUILDING CODE.

| NO. | DATE | ISSUED FOR | BY |
|---|---|---|---|

DESIGNED J.P.S.
DRAWN C.C.P.
CHECKED A.F.H.
PROJ. ENGR. G.A.B.

JEAN PAUL SILVA P.E.
No. 66522

HAZEN AND SAWYER
Environmental Engineers & Scientists
4000 Hollywood Boulevard, Suite 750N
Hollywood, Florida 33021
Certificate of Authorization Number: 2771

SCALE NTS

CLIENTS PROJECT: –
ENGINEERS PROJECT: 44238-004
CAD REFERENCE: 44238-004BP3-S01

NORTH MIAMI FLORIDA
CITY OF NORTH MIAMI
PUBLIC WORKS UTILITIES

WINSON WATER TREATMENT PLANT
BID PACKAGE 3: WTP REHABILITATION
GENERAL STRUCTURAL NOTES

DATE: JUNE 2014
SHEET: 141 OF 335
DRAWING: S-01

PERMITTING

PLOT DATE: 6/10/2014 3:36 p.m. BY: HSCALZ

XREFs= H:\44238-004\Drawings\Bid Package 3 – WTP Rehab\Tblock\44238-004-BP3-TB

File = H:\44238-004\Drawings\Bid Package 3 – WTP Rehab\Struct\44238-004BP3-S01 Saved by ccifuentes Save date = 6/9/2014 9:06 p.m.

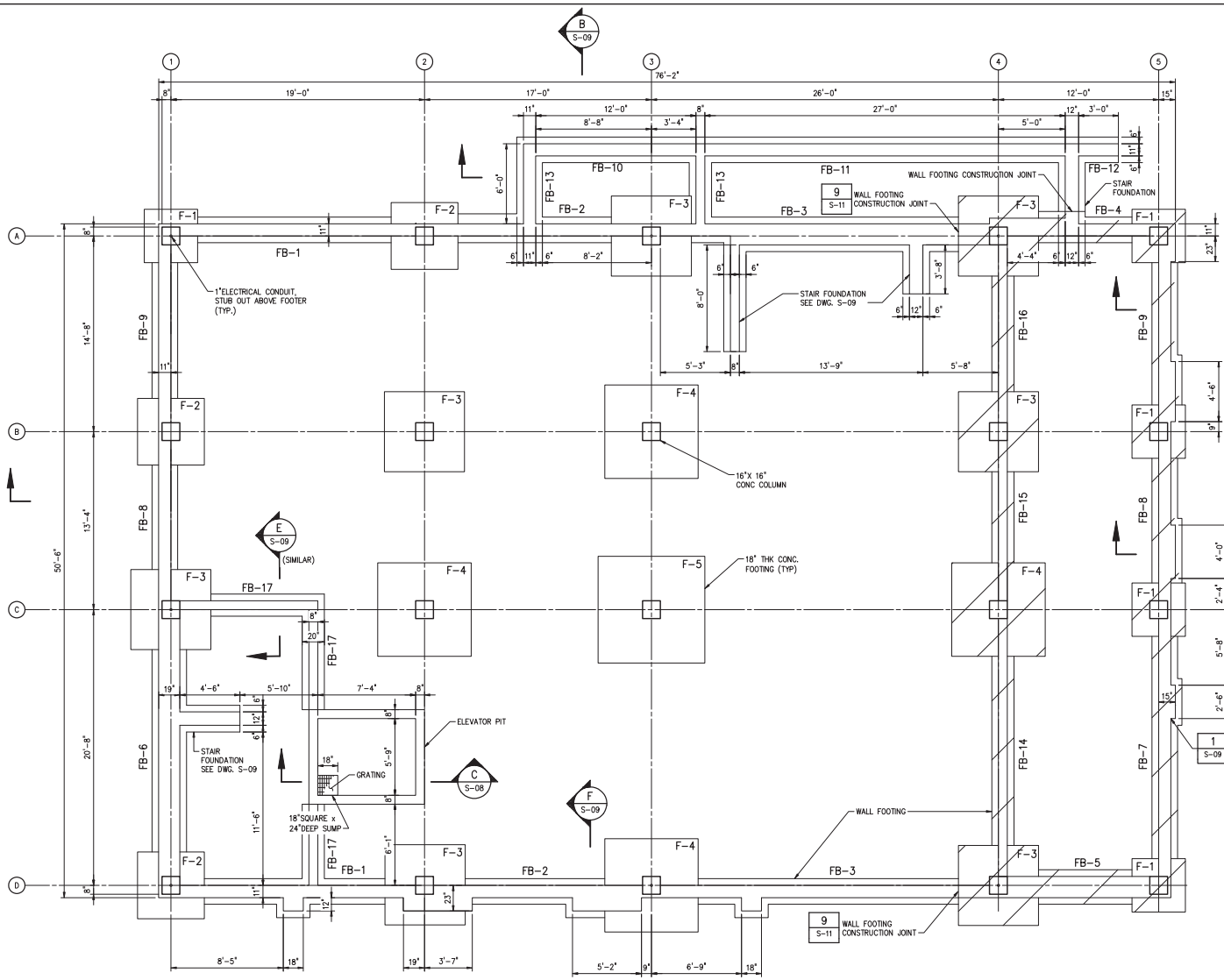


FOUNDATION PLAN
1/4" = 1'-0"

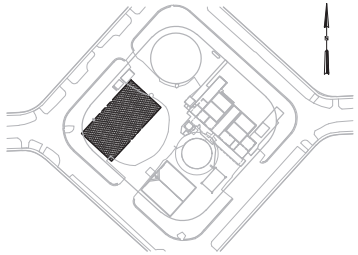

LOCATION MAP

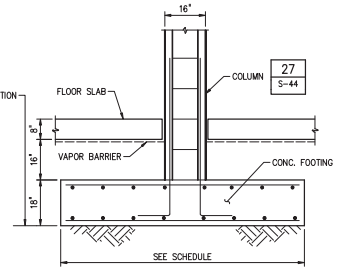


FOOTING TYPICAL SECTION
1/2" = 1'-0"

**FOOTING SCHEDULE**

| FOOTING | DIMENSIONS | QUANTITY | REINFORCEMENT | BEARING ELEVATION |
|---|---|---|---|---|
| F-1 | 4'-0"x4'-0"x18 | 5 | #6@12" EW, T&B | EL. 9.00 |
| F-2 | 5'-0"x5'-0"x18 | 3 | #6@12" EW, T&B | EL. 9.00 |
| F-3 | 6'-0"x6'-0"x18 | 7 | #6@12" EW, T&B | EL. 9.00 |
| F-4 | 7'-0"x7'-0"x18 | 4 | #6@12" EW, T&B | EL. 9.00 |
| F-5 | 8'-0"x8'-0"x18 | 1 | #6@12" EW, T&B | EL. 9.00 |

LEGEND

MAIN ELECTRICAL ROOM TO BE CONSTRUCTED DURING PHASE I AND PHASE II OF CONSTRUCTION. MAIN ELECTRICAL ROOM CONSTRUCTION SHALL BE FINALIZED IN PHASE II OF CONSTRUCTION.

FB-# DENOTES WALL FOOTING. SEE SCHEDULE ON S-12

1/4"=1'-0" 1 0 1 2 3 7'

| NO. | DATE | ISSUED FOR | BY |
|---|---|---|---|

DESIGNED J.P.S.
DRAWN C.C.P
CHECKED A.F.H.
PROJ. ENGR. G.A.B.

JEAN PAUL SILVA P.E.
No. 66522

HAZEN AND SAWYER
Environmental Engineers & Scientists
4000 Hollywood Boulevard, Suite 750N
Hollywood, Florida 33021
Certificate of Authorization Number: 2771

SCALE 1/4"=1'-0"

CLIENTS PROJECT: –
ENGINEERS PROJECT: 44238-004
CAD REFERENCE: 44238-004BP3-S02

CITY OF NORTH MIAMI
PUBLIC WORKS UTILITIES

WINSON WATER TREATMENT PLANT
BID PACKAGE 3: WTP REHABILITATION
NEW ADMINISTRATION BUILDING
FOUNDATION PLAN

DATE: JUNE 2014
SHEET: 142 OF 335
DRAWING: S-02

PERMITTING

PLOT DATE: 6/10/2014 3:37 p.m. BY: HSCAL2
XREFs= ..\Tblock\44238-004-BP3-TB,..\Base-BP3\S-BP3-Admin-Plan-Foundation
File = H:\44238-004\Drawings\Bid Package 3 - WTP Rehab\Struct\44238-004BP3-S02 Saved by HScal1 Save date = 6/9/2014 8:09 p.m.

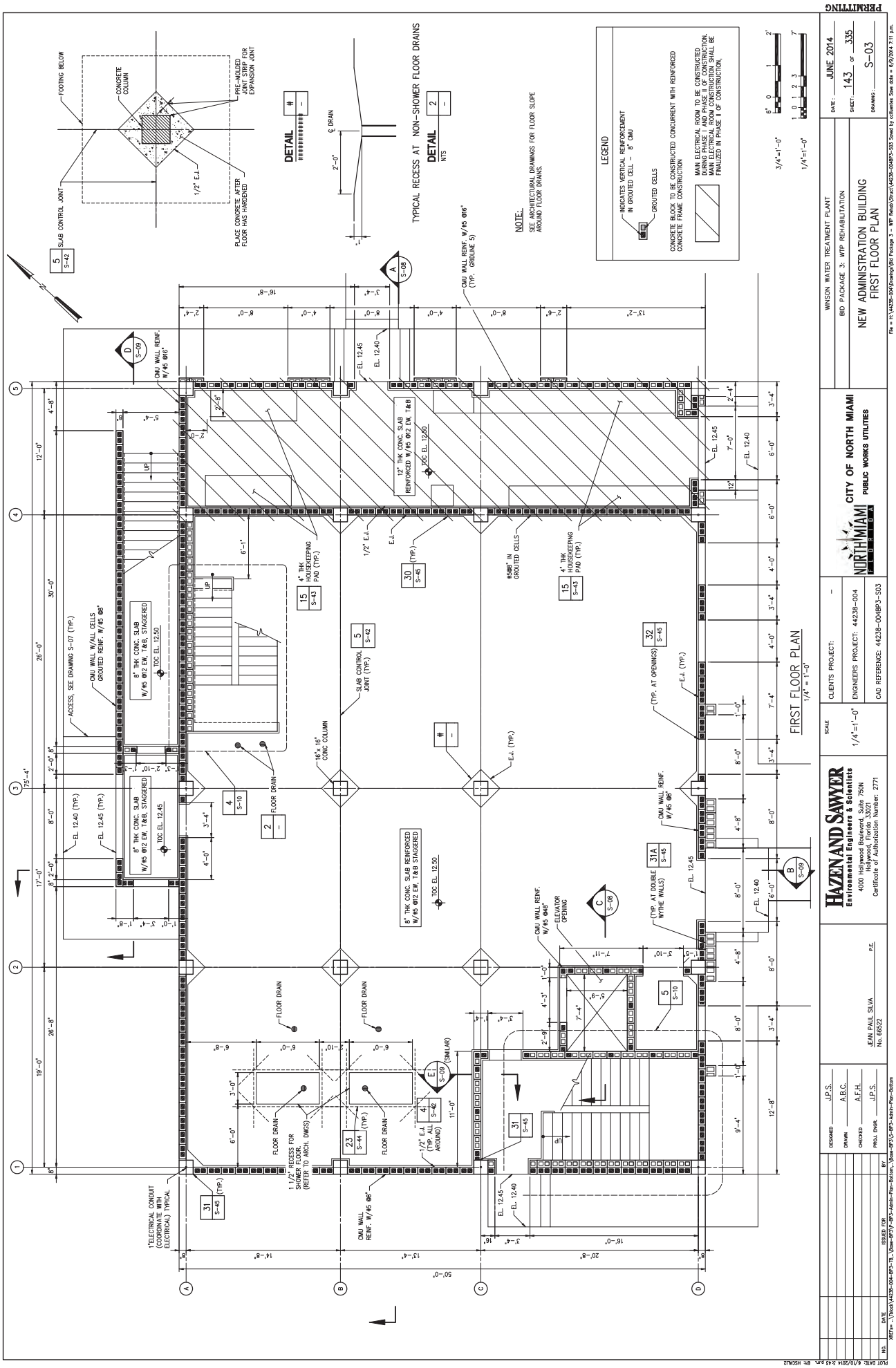
PERMITTING
FIRST FLOOR PLAN
1/4" = 1'-0"
TYPICAL RECESS AT NON-SHOWER FLOOR DRAINS
DETAIL
NOTE:
SEE ARCHITECTURAL DRAWINGS FOR FLOOR SLOPE AROUND FLOOR DRAINS.
LEGEND
INDICATES VERTICAL REINFORCEMENT IN GROUTED CELL - 8" CMU
GROUTED CELLS
CONCRETE BLOCK TO BE CONSTRUCTED CONCURRENT WITH REINFORCED CONCRETE FRAME CONSTRUCTION
MAIN ELECTRICAL ROOM TO BE CONSTRUCTED DURING PHASE I AND PHASE II OF CONSTRUCTION. MAIN ELECTRICAL ROOM CONSTRUCTION SHALL BE FINALIZED IN PHASE II OF CONSTRUCTION.
WINSON WATER TREATMENT PLANT
BID PACKAGE 3: WTP REHABILITATION
NEW ADMINISTRATION BUILDING
FIRST FLOOR PLAN
CITY OF NORTH MIAMI
PUBLIC WORKS UTILITIES
NORTH MIAMI FLORIDA
HAZEN AND SAWYER
Environmental Engineers & Scientists
4000 Hollywood Boulevard, Suite 750N
Hollywood, Florida 33021
Certificate of Authorization Number: 2771
JEAN PAUL SILVA
No. 66522
DATE: JUNE 2014
SHEET: 143 OF 335
DRAWING: S-03
CLIENTS PROJECT: -
ENGINEERS PROJECT: 44238-004
CAD REFERENCE: 44238-004BP3-S03
SCALE 1/4"=1'-0"
DESIGNED J.P.S.
DRAWN A.B.C.
CHECKED A.F.H.
PROJ. ENGR. J.P.S.
ISSUED FOR
NO. DATE BY
PLOT DATE: 6/10/2014 3:43 p.m. BY: HSCALI2

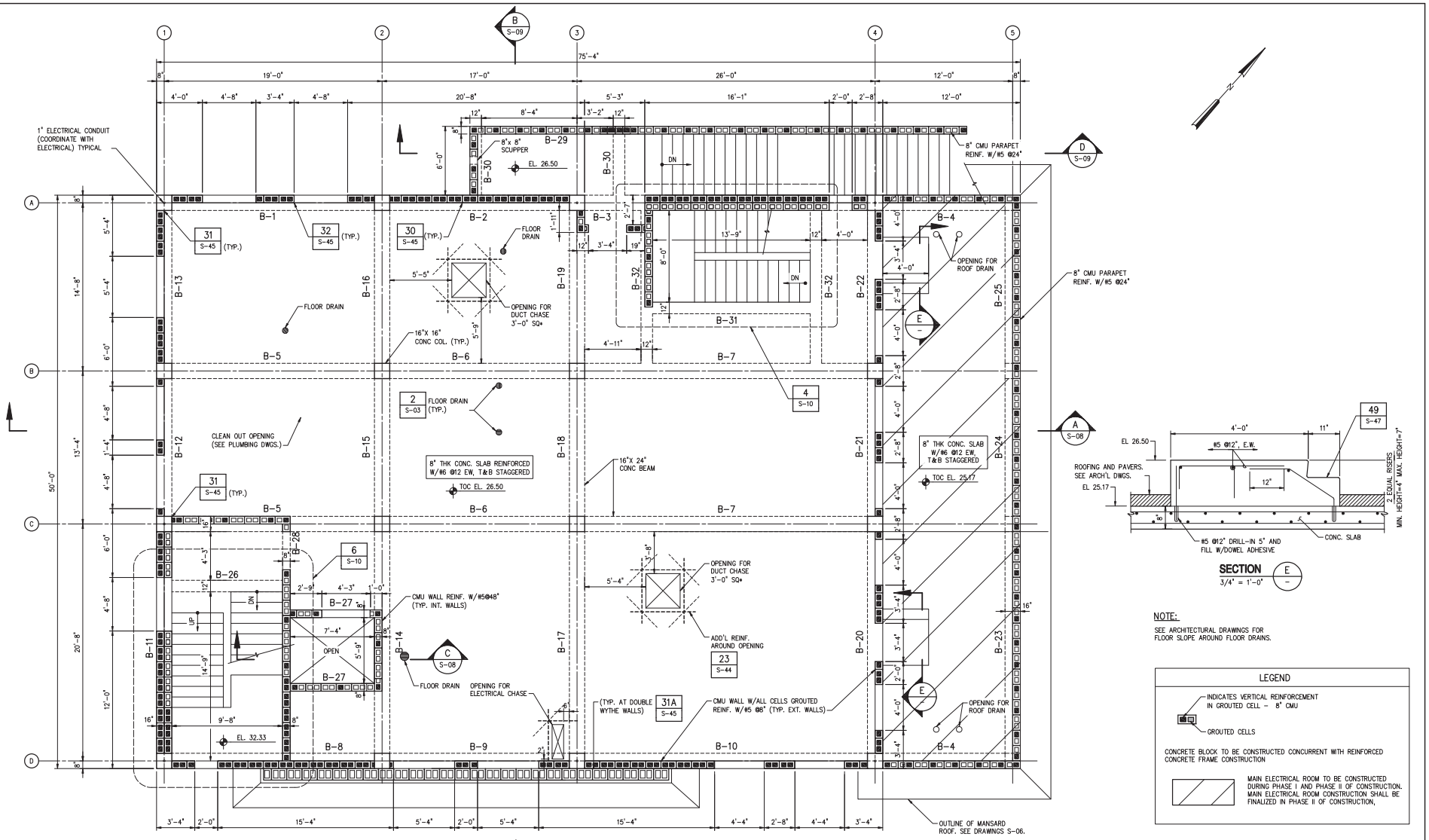


| NO. | DATE | ISSUED FOR | BY |
|---|---|---|---|
| 1 | 4/1/14 | 100% QA COMMENTS | H.J.V. |

DESIGNED J.P.S.
DRAWN A.B.C.
CHECKED A.F.H.
PROJ. ENGR. J.P.S.

JEAN PAUL SILVA P.E.
No. 66522

**HAZEN AND SAWYER**
Environmental Engineers & Scientists
4000 Hollywood Boulevard, Suite 750N
Hollywood, Florida 33021
Certificate of Authorization Number: 2771

SCALE 1/4"=1'-0"

CLIENTS PROJECT: –
ENGINEERS PROJECT: 44238-004
CAD REFERENCE: 44238-004BP3-S04

NORTH MIAMI FLORIDA
CITY OF NORTH MIAMI
PUBLIC WORKS UTILITIES

WINSON WATER TREATMENT PLANT
BID PACKAGE 3: WTP REHABILITATION
NEW ADMINISTRATION BUILDING
SECOND FLOOR PLAN

DATE: JUNE 2014
SHEET: 144 OF 335
DRAWING: S-04

PERMITTING

PLOT DATE: 6/10/2014 3:49 p.m. BY: HSCAL2

XREFs= ..\Tblock\44238-004-BP3-TB,..\Base-BP3\S-BP3-Admin-Plan-Second,..\Base-BP3\P-BP3-Admin-Plan-Top

File = H:\44238-004\Drawings\Bid Package 3 - WTP Rehab\Struct\44238-004BP3-S04 Saved by HaCal2 Save date = 6/9/2014 7:35 p.m.

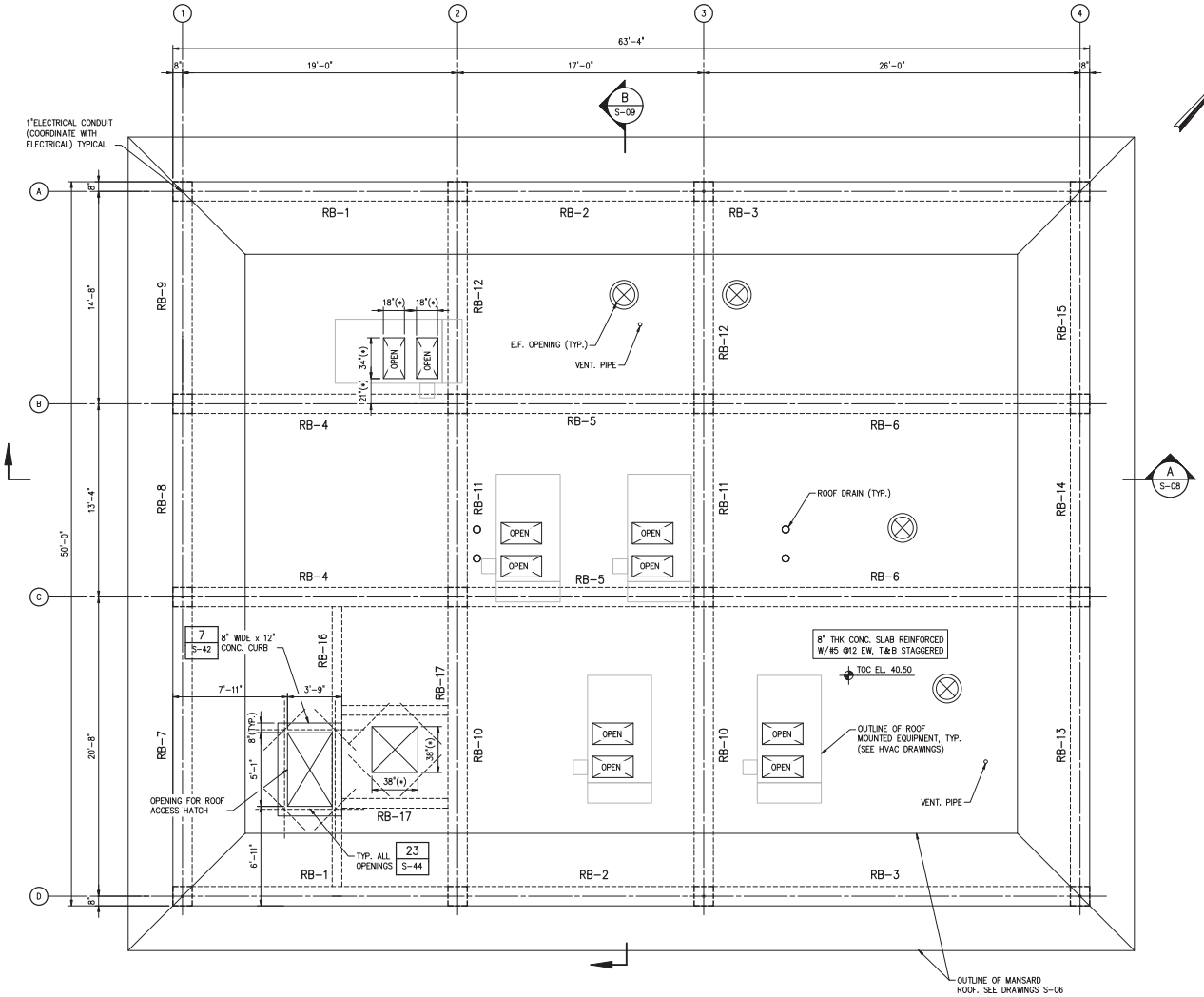


ROOF PLAN
1/4" = 1'-0"

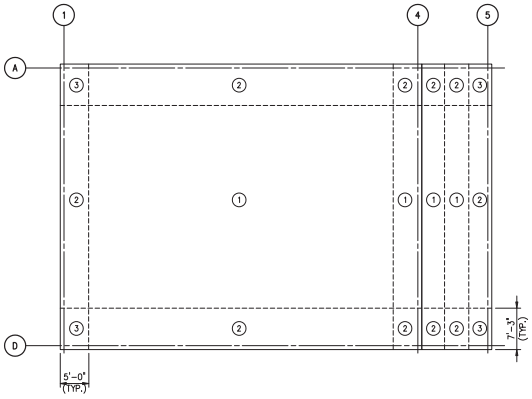


WIND PRESSURE ZONES
NTS

| ROOF NOMINAL WIND PRESSURES (PSF) | | |
|---|---|---|
| ZONE | P+ | P− |
| 1 | 35 | 86 |
| 2 | 35 | 144 |
| 3 | 35 | 216 |

1/4"=1'-0"

| NO. | DATE | ISSUED FOR | BY |
|---|---|---|---|

DESIGNED J.P.S.
DRAWN A.B.C.
CHECKED A.F.H.
PROJ. ENGR. J.P.S.

JEAN PAUL SILVA P.E.
No. 66522

HAZEN AND SAWYER
Environmental Engineers & Scientists
4000 Hollywood Boulevard, Suite 750N
Hollywood, Florida 33021
Certificate of Authorization Number: 2771

SCALE 1/4"=1'-0"

CLIENTS PROJECT: –
ENGINEERS PROJECT: 44238-004
CAD REFERENCE: 44238-004BP3-S05

CITY OF NORTH MIAMI
PUBLIC WORKS UTILITIES

WINSON WATER TREATMENT PLANT
BID PACKAGE 3: WTP REHABILITATION
NEW ADMINISTRATION BUILDING
ROOF PLAN

DATE: JUNE 2014
SHEET: 145 OF 335
DRAWING: S-05

PERMITTING

PLOT DATE: 6/10/2014 3:54 p.m. BY: HSCALZ

XREFs= ..\Block\44238-004-BP3-TB,..\Base-BP3\S-BP3-Admin-Plan-Roof

File = H:\44238-004\Drawings\Bid Package 3 - WTP Rehab\Struct\44238-004BP3-S05 Saved by fcarvajal Save date = 6/9/2014 7:52 p.m.

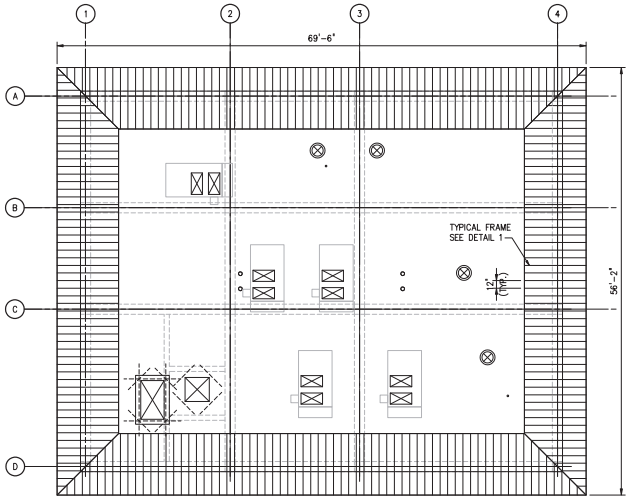


ROOF PLAN
1/8" = 1'-0"

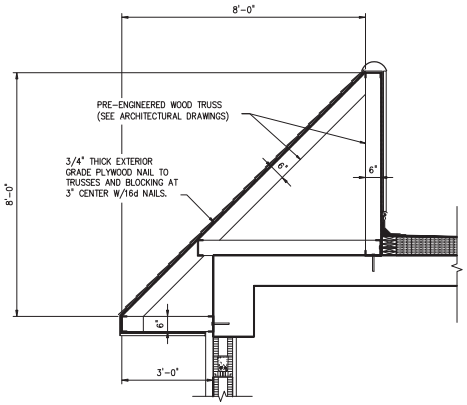


**DETAIL** 1 | 1
NTS S-08 | S-09

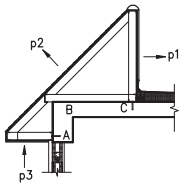


| NOMINAL WIND PRESSURES (PSF) | | |
|---|---|---|
| p1 | +111 | -89 |
| p2 | +105 | - |
| p3 | +52 | - |

| REACTIONS (Lb) (PER TRUSS @ 12" O.C.) | | | |
|---|---|---|---|
| SUPPORT | H | V | CONNECTOR |
| A | +810 | -265 | HGAM10 |
| B | +72 | -1609 | LGT2 |
| C | +534 | -117 | HGAM10 |

+V
+H

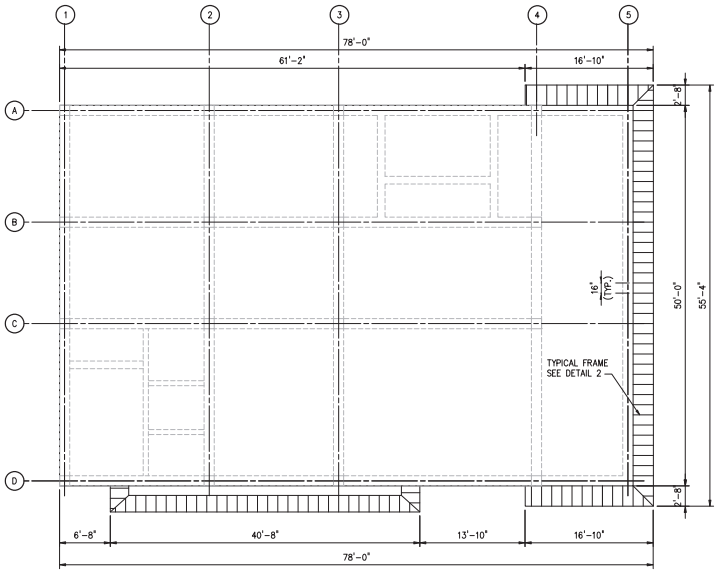


SECOND FLOOR PLAN
1/8" = 1'-0"

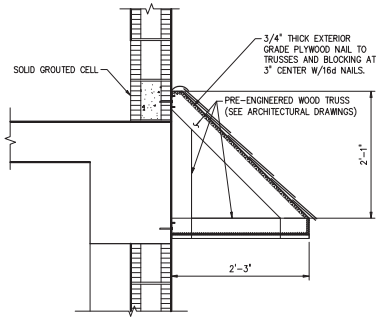


**DETAIL** 2 | 2
NTS S-08 | S-09

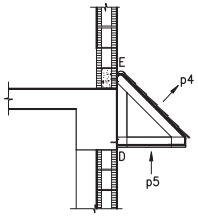


| NOMINAL WIND PRESSURES (PSF) | | |
|---|---|---|
| p4 | +111 | -89 |
| p5 | +52 | - |

| REACTIONS (Lb) (PER TRUSS @ 16" O.C.) | | | |
|---|---|---|---|
| SUPPORT | H | V | CONNECTOR (*) |
| D | 416 | 146 | HGAM10 |
| E | 79 | 349 | HGAM10 |

+V
+H

NOTES:

1. SIMPSON STRONG-TIE CONNECTORS AND FASTENERS HAVE BEEN USED AS THE BASIS TO MEET THE STRUCTURAL CALCULATIONS. CONTRACTOR SHALL CONFIRM LOAD CAPACITY BASED ON RELIABLE PUBLISHED TESTING DATA OR CALCULATIONS IF CONNECTORS ARE SUBSTITUTED, AND SHALL SUBMIT TO THE ENGINEER FOR APPROVAL.
2. CONTRACTOR SHALL USE FASTENERS RECOMMENDED BY CONNECTOR MANUFACTURER TO MEET DESIGN LOADS AND COMPLY WITH PRODUCT APPROVAL.

1/8"=1'-0" 8 6 4 2 0 8'

PLOT DATE: 6/10/2014 3:37 p.m. BY: HSCALZ

| NO. | DATE | ISSUED FOR | BY |
|---|---|---|---|

DESIGNED J.P.S.
DRAWN C.C.P
CHECKED A.F.H.
PROJ. ENGR. J.P.S.

JEAN PAUL SILVA P.E.
No. 66522

HAZEN AND SAWYER
Environmental Engineers & Scientists
4000 Hollywood Boulevard, Suite 750N
Hollywood, Florida 33021
Certificate of Authorization Number: 2771

SCALE –

CLIENTS PROJECT: –
ENGINEERS PROJECT: 44238-004
CAD REFERENCE: 44238-004BP3-S06

NORTH MIAMI FLORIDA
CITY OF NORTH MIAMI
PUBLIC WORKS UTILITIES

WINSON WATER TREATMENT PLANT
BID PACKAGE 3: WTP REHABILITATION
NEW ADMINISTRATION BUILDING
ROOF TRUSS PLANS

DATE: JUNE 2014
SHEET: 146 OF 335
DRAWING: S-06

PERMITTING

XREFs= ..\Thlock\44238-004-BP3-TB,..\Base-BP3\S-BP3-Admin-Plan-Roof

File = H:\44238-004\Drawings\Bid Package 3 - WTP Rehab\Struct\44238-004BP3-S06 Saved by cofuentes Save date = 6/9/2014 7:56 p.m.

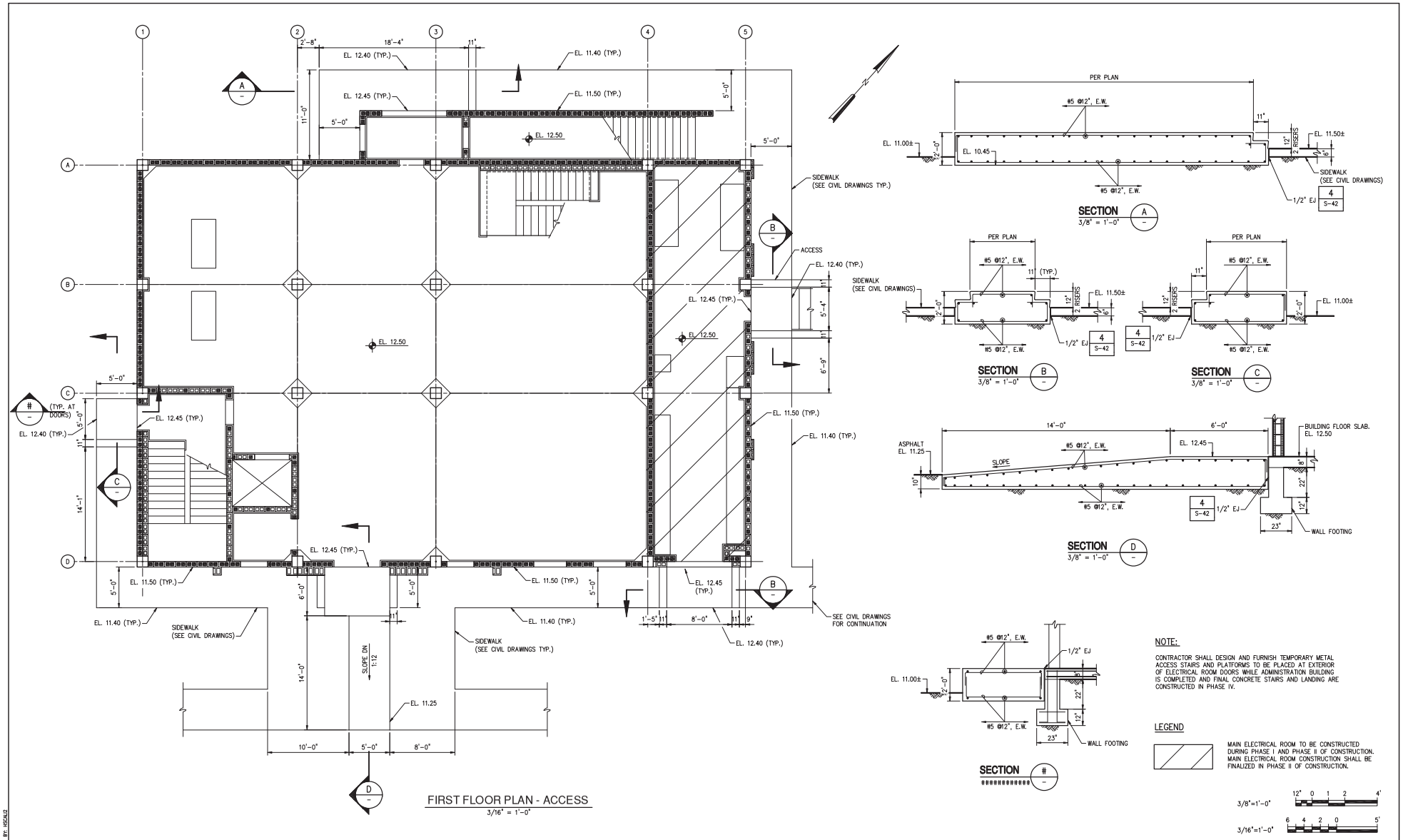


| NO. | DATE | ISSUED FOR | BY |
|---|---|---|---|

DESIGNED J.P.S.
DRAWN C.C.P.
CHECKED A.F.H.
PROJ. ENGR. J.P.S.

JEAN PAUL SILVA P.E.
No. 66522

**HAZEN AND SAWYER**
Environmental Engineers & Scientists
4000 Hollywood Boulevard, Suite 750N
Hollywood, Florida 33021
Certificate of Authorization Number: 2771

SCALE 1/4"=1'-0"

CLIENTS PROJECT: –
ENGINEERS PROJECT: 44238-004
CAD REFERENCE: 44238-004BP3-S07

NORTH MIAMI FLORIDA
CITY OF NORTH MIAMI
PUBLIC WORKS UTILITIES

WINSON WATER TREATMENT PLANT
BID PACKAGE 3: WTP REHABILITATION
NEW ADMINISTRATION BUILDING
ACCESS AND SIDEWALK

DATE: JUNE 2014
SHEET: 147 OF 335
DRAWING: S-07

PERMITTING

PLOT DATE: 6/10/2014 4:01 p.m. BY: HSCALZ
XREFs= ..\Block\44238-004-BP3-TB,..\Base-BP3\S-BP3-Admin-Plan-Bottom
File = H:\44238-004\Drawings\Bid Package 3 - WTP Rehab\Struct\44238-004BP3-S07 Saved by fcarvajal Save date = 6/9/2014 4:53 p.m.

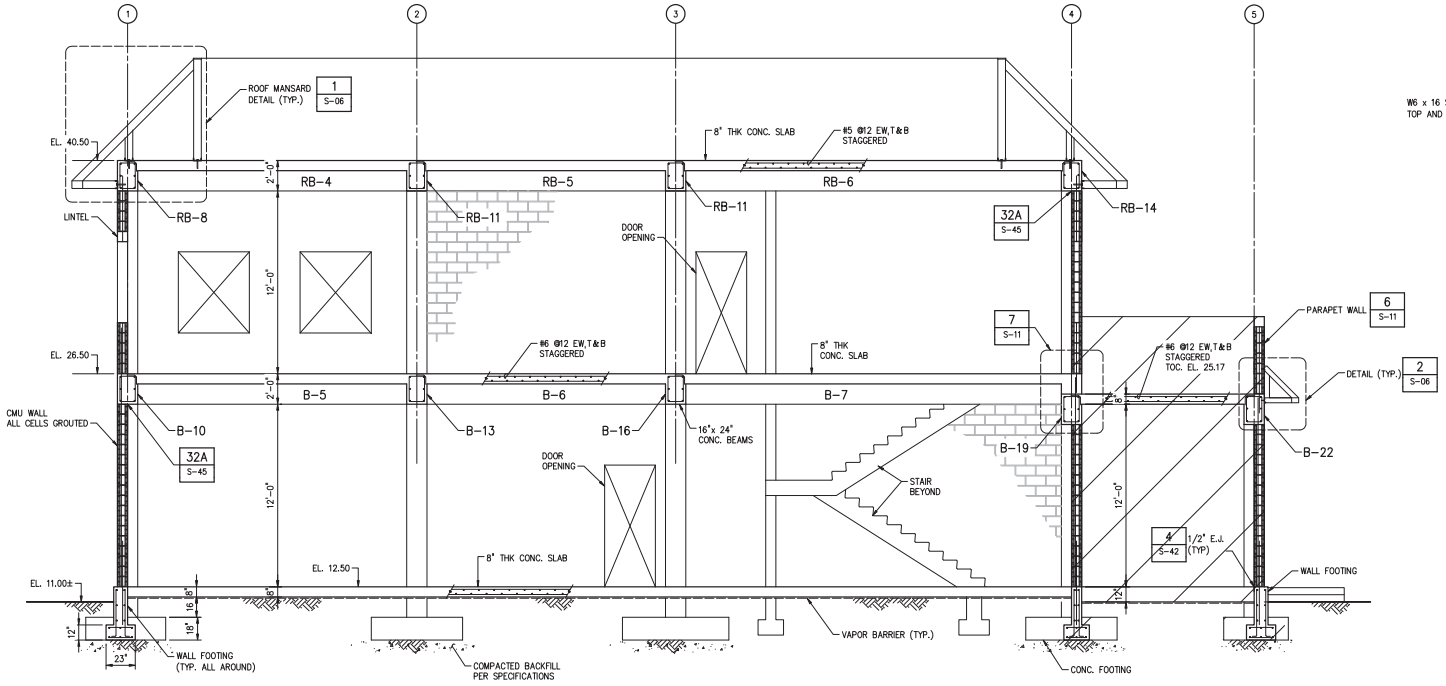


SECTION A (S-02)
1/4" = 1'-0"

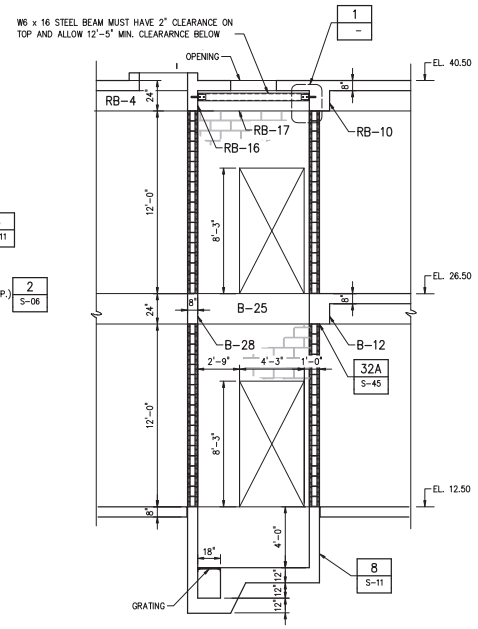


SECTION C (S-03)
1/4" = 1'-0"

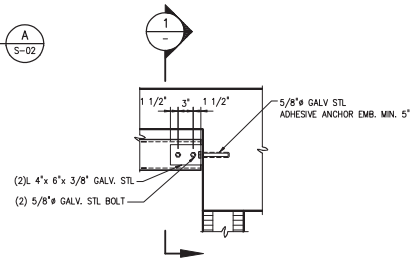


DETAIL 1
1" = 1'-0"

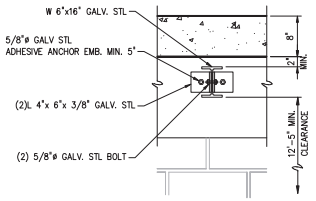


SECTION 1
1" = 1'-0"

LEGEND

MAIN ELECTRICAL ROOM TO BE CONSTRUCTED DURING PHASE I AND PHASE II OF CONSTRUCTION. MAIN ELECTRICAL ROOM CONSTRUCTION SHALL BE FINALIZED IN PHASE II OF CONSTRUCTION.

1/4"=1'-0"

| NO. | DATE | ISSUED FOR | BY |
|---|---|---|---|

DESIGNED J.P.S.
DRAWN C.C.P
CHECKED A.F.H.
PROJ. ENGR. G.A.B.

JEAN PAUL SILVA P.E.
No. 66522

HAZEN AND SAWYER
Environmental Engineers & Scientists
4000 Hollywood Boulevard, Suite 750N
Hollywood, Florida 33021
Certificate of Authorization Number: 2771

SCALE 1/4"=1'-0"

CLIENTS PROJECT: –
ENGINEERS PROJECT: 44238-004
CAD REFERENCE: 44238-004BP3-S08

NORTH MIAMI FLORIDA
CITY OF NORTH MIAMI
PUBLIC WORKS UTILITIES

WINSON WATER TREATMENT PLANT
BID PACKAGE 3: WTP REHABILITATION
NEW ADMINISTRATION BUILDING
SECTIONS SHEET 1

DATE: JUNE 2014
SHEET: 148 OF 335
DRAWING: S-08

PERMITTING

PLOT DATE: 6/10/2014 4:03 p.m. BY: HSCALZ

XREFs= ..\Tblock\44238-004-BP3-TB,..\Base-BP3\S-BP3-Admin-Sections

File = H:\44238-004\Drawings\Bid Package 3 - WTP Rehab\Struct\44238-004BP3-S08 Saved by fcarvajal Save date = 6/9/2014 5:54 p.m.

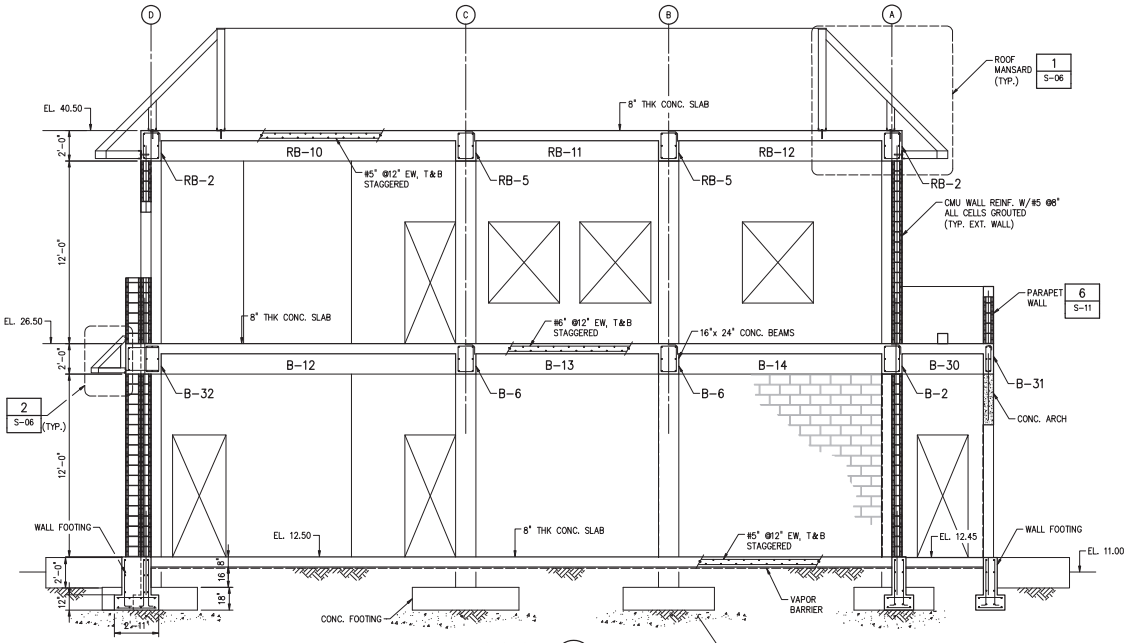


**SECTION** B S-03
1/4" = 1'

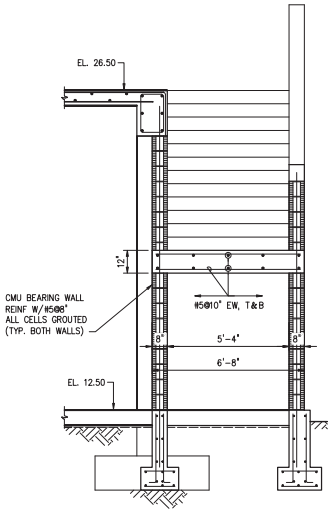


**SECTION** C –
3/8" = 1'-0"

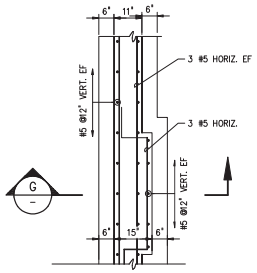


**DETAIL** 1 S-02
1/2" = 1'-0"

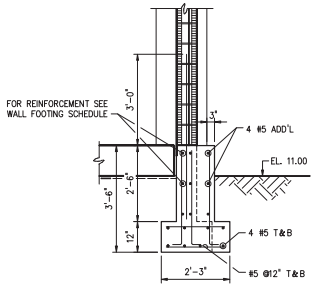


**SECTION** G S-02
1/2" = 1'

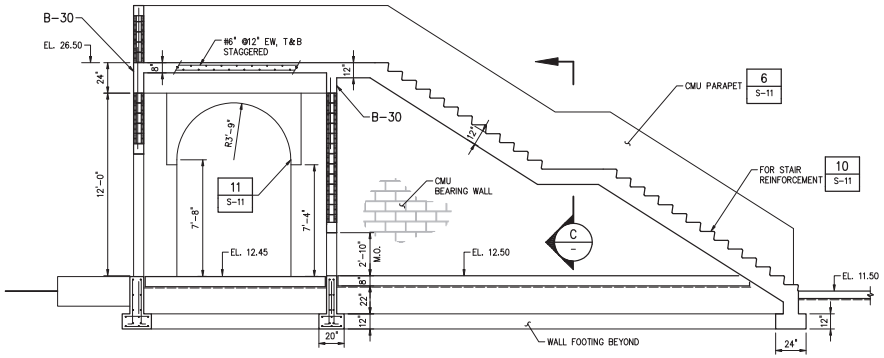


**SECTION** D S-03
1/4" = 1'-0"

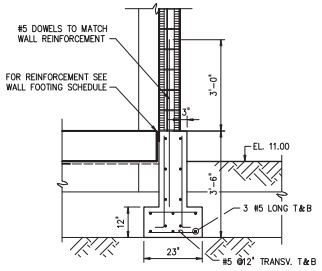


**SECTION** E S-02
1/2" = 1'

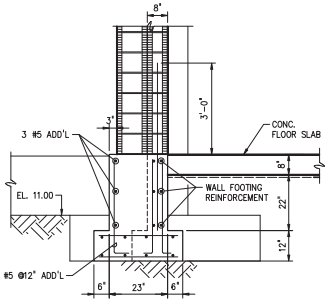


**SECTION** F S-02
1/2" = 1'

1/2"=1'-0" 12" 0 1 3'
1/4"=1'-0" 1 0 1 2 3 7'

| NO. | DATE | ISSUED FOR | BY |
|---|---|---|---|

DESIGNED J.P.S.
DRAWN A.B.C.
CHECKED A.F.H.
PROJ. ENGR. G.A.B.

JEAN PAUL SILVA P.E.
No. 66522

HAZEN AND SAWYER
Environmental Engineers & Scientists
4000 Hollywood Boulevard, Suite 750N
Hollywood, Florida 33021
Certificate of Authorization Number: 2771

SCALE 1/4"=1'-0"

CLIENTS PROJECT: –
ENGINEERS PROJECT: 44238-004
CAD REFERENCE: 44238-004BP3-S09

NORTH MIAMI FLORIDA
CITY OF NORTH MIAMI
PUBLIC WORKS UTILITIES

WINSON WATER TREATMENT PLANT
BID PACKAGE 3: WTP REHABILITATION
NEW ADMINISTRATION BUILDING
SECTIONS SHEET 2

DATE: JUNE 2014
SHEET: 149 OF 335
DRAWING: S-09

PERMITTING

PLOT DATE: 6/10/2014 4:08 p.m. BY: HSCALZ

XREFs= ..\Tblock\44238-004-BP3-TB,..\Base-BP3\S-BP3-Admin-Sections

File = H:\44238-004\Drawings\Bid Package 3 - WTP Rehab\Struct\44238-004BP3-S09 Saved by ccifuentes Save date = 6/9/2014 9:14 p.m.

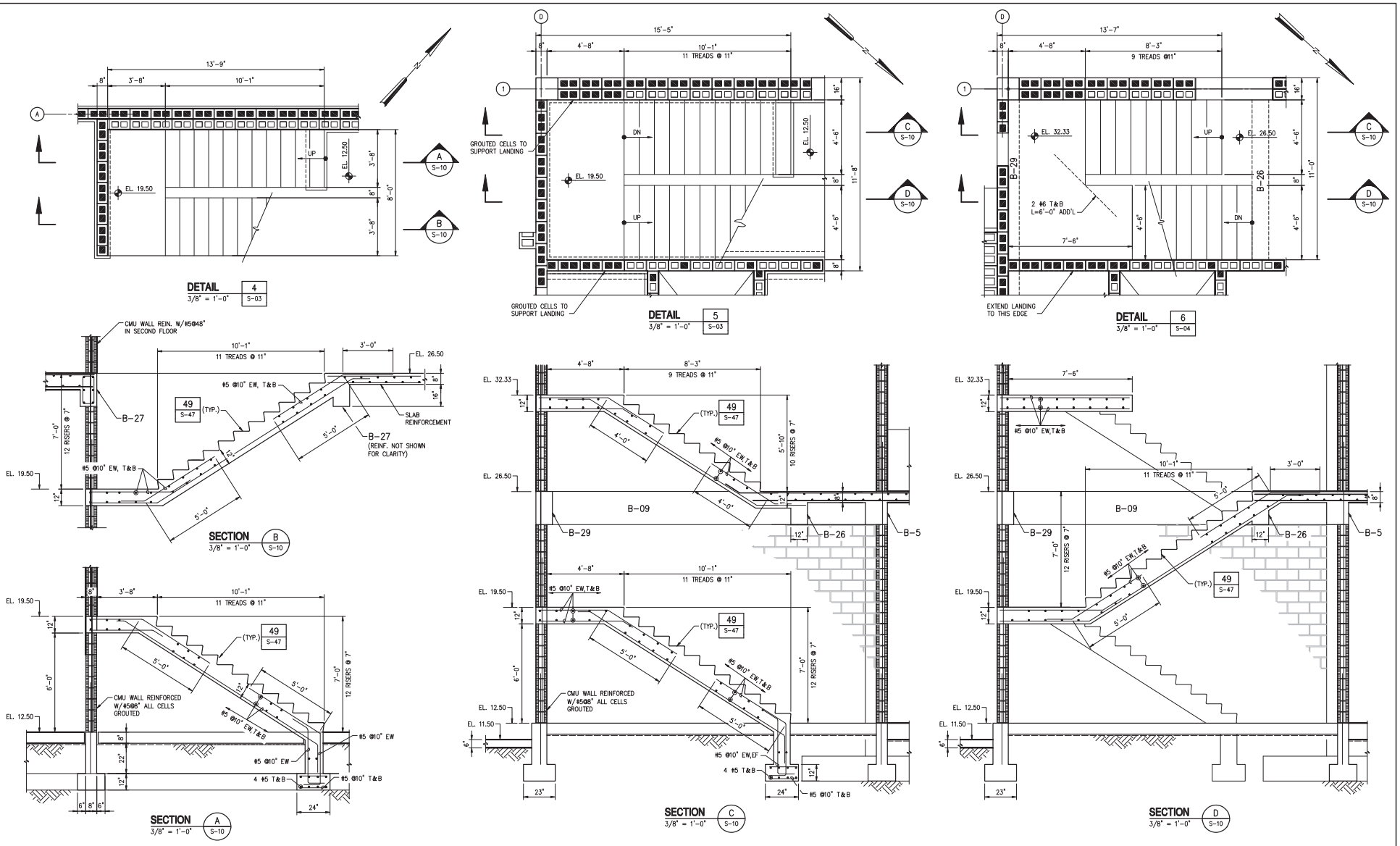


| NO. | DATE | ISSUED FOR | BY |
|---|---|---|---|

DESIGNED J.P.S.
DRAWN C.C.P.
CHECKED A.V.F.
PROJ. ENGR. J.P.S.

JEAN PAUL SILVA P.E.
No. 66522

**HAZEN AND SAWYER**
Environmental Engineers & Scientists
4000 Hollywood Boulevard, Suite 750N
Hollywood, Florida 33021
Certificate of Authorization Number: 2771

SCALE: AS NOTED

CLIENTS PROJECT: –
ENGINEERS PROJECT: 44238-004
CAD REFERENCE: 44238-004BP3-S10

NORTH MIAMI FLORIDA — CITY OF NORTH MIAMI PUBLIC WORKS UTILITIES

WINSON WATER TREATMENT PLANT
BID PACKAGE 3: WTP REHABILITATION
NEW ADMINISTRATION BUILDING DETAILS SHEET 1

DATE: JUNE 2014
SHEET: 150 OF 335
DRAWING: S-10

PERMITTING

PLOT DATE: 6/10/2014 4:12 p.m. BY: HSCALZ

XREFs= ..\Tblock\44238-004-BP3-TB,..\Base-BP3\S-BP3-Admin-Plan-Second

File = H:\44238-004\Drawings\Bid Package 3 - WTP Rehab\Struct\44238-004BP3-S10 Saved by ccifuentes Save date = 6/9/2014 5:15 p.m.

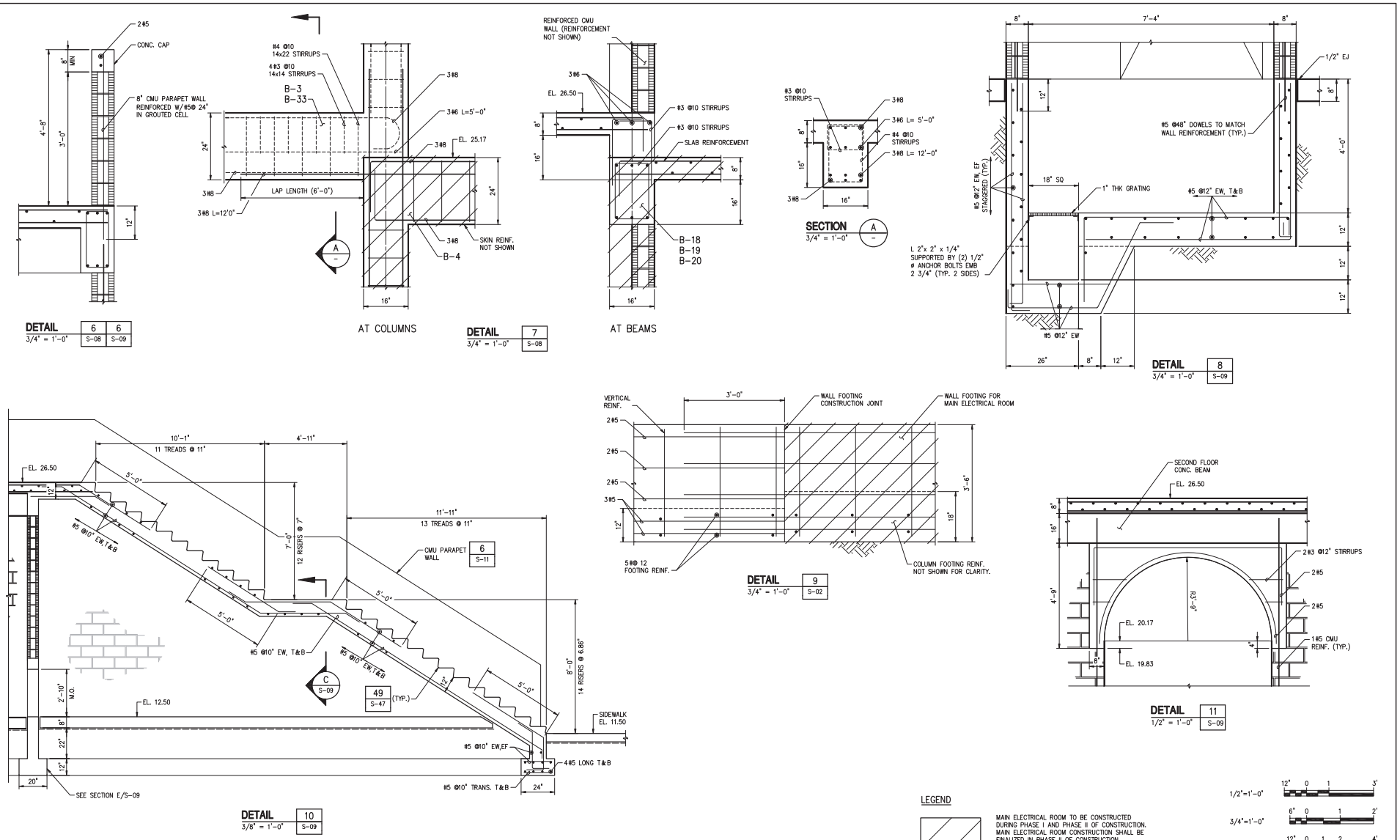


| NO. | DATE | ISSUED FOR | BY |
|---|---|---|---|
| | | | |

DESIGNED J.P.S.
DRAWN F.C.T.
CHECKED A.V.F.
PROJ. ENGR. J.P.S.

JEAN PAUL SILVA P.E.
No. 66522

**HAZEN AND SAWYER**
Environmental Engineers & Scientists
4000 Hollywood Boulevard, Suite 750N
Hollywood, Florida 33021
Certificate of Authorization Number: 2771

SCALE: AS NOTED

CLIENTS PROJECT: –
ENGINEERS PROJECT: 44238-004
CAD REFERENCE: 44238-004BP3-S11

NORTH MIAMI FLORIDA
**CITY OF NORTH MIAMI**
**PUBLIC WORKS UTILITIES**

WINSON WATER TREATMENT PLANT
BID PACKAGE 3: WTP REHABILITATION

NEW ADMINISTRATION BUILDING
DETAILS SHEET 2

DATE: JUNE 2014
SHEET: 151 OF 335
DRAWING: S-11

PERMITTING

PLOT DATE: 6/10/2014 4:16 p.m. BY: HSCALZ

XREFs= ..\Tblock\44238-004-BP3-TB,..\Base-BP3\S-BP3-Admin-Sections

File = H:\44238-004\Drawings\Bid Package 3 - WTP Rehab\Struct\44238-004BP3-S11 Saved by fcarvajal Save date = 6/9/2014 7:15 p.m.

## BEAM SCHEDULE

| MARK | SPAN TYPE | SIZE W" | SIZE D" | TOP ELEVATION | No. REQ'S | MAIN REINF. TOP | MAIN REINF. BOT. | ADD. REINF. A | ADD. REINF. B | ADD. REINF. C | STIRRUP SIZE | STIRRUP SPACING | REMARKS |
|---|---|---|---|---|---|---|---|---|---|---|---|---|---|
| SECOND FLOOR BEAMS | | | | | | | | | | | | | |
| B-1 | END | 16" | 24" | 26.50 | 1 | 3#8 | 3#6 | | | | #4 | 8 | |
| B-2 | INT | 16" | 24" | 26.50 | 1 | 3#9 | 3#6 | | | | #4 | 10 | |
| B-3 | END | 16" | 24" | 26.50 | 1 | 3#9 | 3#8 | | | | #4 | 10 | SEE DET. 7/S-11 |
| B-4 | SIMPLE | 16" | 24" | 25.17 | 2 | 3#8 | 3#8 | | | | #4 | 10 | SEE DET. 7/S-11 |
| B-5 | END | 16" | 24" | 26.50 | 2 | 3#8 | 3#6 | | | | #4 | 10 | |
| B-6 | INT | 16" | 24" | 26.50 | 2 | 3#8 | 3#6 | | | | #4 | 10 | |
| B-7 | END | 16" | 24" | 26.50 | 2 | 3#9 | 3#8 | | | | #4 | 10 | |
| B-8 | END | 16"/28" | 24" | 26.50 | 1 | 3#8 | 3#6 | | | | #4 | 10 | SEE DET. 1/S-12 |
| B-9 | INT | 28" | 24" | 26.50 | 1 | 3#8 | 3#8 | | | | #4 | 8 | SEE DET. 1/S-12 |
| B-10 | END | 16"/28" | 24" | 26.50 | 1 | 3#9 | 3#8 | | | | #4 | 8 | SEE DET. 7/S-11, 1/S-12 |
| B-11 | END | 16" | 24" | 26.50 | 1 | 2#9 | 3#8 | | | 2#9 | #4 | 10 | |
| B-12 | INT | 16" | 24" | 26.50 | 1 | 3#9 | 3#6 | | | | #4 | 10 | |
| B-13 | END | 16" | 24" | 26.50 | 1 | 3#9 | 4#9 | | | | #4 | 10 | |
| B-14 | END | 16" | 24" | 26.50 | 1 | 2#9 | 3#8 | | | 2#9 | #4 | 10 | |
| B-15 | INT | 16" | 24" | 26.50 | 1 | 3#8 | 3#6 | | | | #4 | 10 | |
| B-16 | END | 16" | 24" | 26.50 | 1 | 3#9 | 3#8 | | | | #4 | 10 | |
| B-17 | END | 16" | 24" | 26.50 | 1 | 2#9 | 3#8 | | | 2#9 | #4 | 10 | |
| B-18 | INT | 16" | 24" | 26.50 | 1 | 3#8 | 3#6 | | | | #4 | 10 | |
| B-19 | END | 16" | 24" | 26.50 | 1 | 3#9 | 3#6 | | | | #4 | 10 | |
| B-20 | END | 16" | 24" | 25.17 | 1 | 2#9 | 3#8 | | | 2#9 | #4 | 10 | SEE DET. 7/S-11 |
| B-21 | INT | 16" | 24" | 25.17 | 1 | 3#9 | 3#6 | | | | #4 | 10 | SEE DET. 7/S-11 |
| B-22 | END | 16" | 24" | 25.17 | 1 | 3#9 | 3#8 | | | | #4 | 10 | SEE DET. 7/S-11 |
| B-23 | END | 16" | 24" | 25.17 | 1 | 3#8 | 3#6 | | | | #4 | 6 | |
| B-24 | INT | 16" | 24" | 25.17 | 1 | 3#8 | 3#6 | | | | #4 | 8 | |
| B-25 | END | 16" | 24" | 25.17 | 1 | 3#8 | 3#6 | | | | #4 | 6 | |
| B-26 | SIMPLE | 12" | 24" | 26.50 | 1 | 2#8 | 2#8 | | | | #3 | 10 | |
| B-27 | SIMPLE | 8" | 24" | 26.50 | 2 | 2#6 | 2#6 | | | | #3 | 10 | |
| B-28 | SIMPLE | 8" | 24" | 26.50 | 1 | 2#8 | 2#8 | | | | #3 | 10 | |
| B-29 | SIMPLE | 8" | 24" | 26.50 | 1 | 2#6 | 2#6 | | | | #3 | 10 | |
| B-30 | SIMPLE | 12" | 24" | 26.50 | 2 | 2#8 | 2#8 | | | | #3 | 10 | |
| B-31 | SIMPLE | 12" | 24" | 26.50 | 1 | 2#6 | 2#6 | | | | #3 | 10 | |
| B-32 | SIMPLE | 12" | 24" | 26.50 | 2 | 2#8 | 2#8 | | | | #3 | 10 | |
| ROOF BEAMS | | | | | | | | | | | | | |
| RB-1 | END | 16" | 24" | 40.50 | 2 | 4#6 | 4#6 | | | | #3 | 8 | |
| RB-2 | INT | 16" | 24" | 40.50 | 2 | 4#6 | 4#6 | | | | #3 | 8 | |
| RB-3 | END | 16" | 24" | 40.50 | 2 | 4#6 | 4#6 | | | | #3 | 6 | |
| RB-4 | END | 16" | 24" | 40.50 | 2 | 4#6 | 3#6 | | | | #3 | 10 | |
| RB-5 | INT | 16" | 24" | 40.50 | 2 | 4#6 | 3#6 | | | | #3 | 10 | |
| RB-6 | END | 16" | 24" | 40.50 | 2 | 4#6 | 4#6 | | | | #3 | 10 | |
| RB-7 | END | 16" | 24" | 40.50 | 1 | 4#6 | 4#6 | | | | #3 | 10 | |
| RB-8 | INT | 16" | 24" | 40.50 | 1 | 4#6 | 4#6 | | | | #3 | 10 | |
| RB-9 | END | 16" | 24" | 40.50 | 1 | 4#6 | 4#6 | | | | #3 | 10 | |
| RB-10 | END | 16" | 24" | 40.50 | 2 | 3#6 | 3#6 | | | | #3 | 10 | |
| RB-11 | INT | 16" | 24" | 40.50 | 2 | 3#6 | 3#6 | | | | #3 | 10 | |
| RB-12 | END | 16" | 24" | 40.50 | 2 | 3#6 | 3#6 | | | | #3 | 10 | |
| RB-13 | END | 16" | 24" | 40.50 | 1 | 4#6 | 4#6 | | | | #3 | 6 | |
| RB-14 | INT | 16" | 24" | 40.50 | 1 | 4#6 | 4#6 | | | | #3 | 8 | |
| RB-15 | END | 16" | 24" | 40.50 | 1 | 4#6 | 4#6 | | | | #3 | 8 | |
| RB-16 | SIMPLE | 8" | 24" | 40.50 | 1 | 2#6 | 2#6 | | | | #3 | 10 | |
| RB-17 | SIMPLE | 8" | 24" | 40.50 | 2 | 2#6 | 2#6 | | | | #3 | 10 | |

SEE DETAIL 28/S-44 FOR BEAM ELEVATIONS

## CONCRETE COLUMN SCHEDULE

| LOCATION | ELEVATION \ DESIGNATION | | A-1,B-1, C-1, | A-2, B-2, C-2, D-1, D-2 A-3, B-3, C-3, | D-3 | A-5, B-5 C-5, D-5 | A-4, B-4 C-4, D-4 |
|---|---|---|---|---|---|---|---|
| ROOF | EL. 40.50 | SIZE: BxD | 16"x 16" | 16"x 16" | 16"x 16" | | 16"x 16" |
| | | VERT. REINF. | 8#11 | 8#10 | 8#9 | | 8#10 |
| | | TIES | #4@10" | #4@10" | #4@10" | | #4@10" |
| SECOND FLOOR | EL. 26.50 | | 8'-2" | 7'-6" | 6'-9" | | 7 S-11 6'-9" |
| OBSERVATION DECK | EL. 25.17 | | | | | | |
| | | SIZE: BxD | 16"x 16" | 16"x 16" | 16"x 16" | 16"x 16" | 16"x 16" |
| | | VERT. REINF. | 8#11 | 8#10 | 8#9 | 8#9 | 8#10 |
| | | TIES | #4@10" | #4@10" | #4@10" | #4@10" | #4@10" |
| FIRST FLOOR | EL. 12.50 | | 8'-2" | 7'-6" | 6'-9" | 6'-9" | 6'-9" |
| TOP OF FOUNDATION | EL. 10.05 | | | | | | |
| FOUNDATION | EL. 9.00 | DOWELS | 8#11 | 8#10 | 8#9 | 8#9 | 8#10 |

SEE DETAIL 27 / S-44 FOR COLUMNS ELEVATION

COLUMN SCHEDULE
1/4" = 1'-0"

## WALL FOOTING SCHEDULE

| | REINFORCEMENT | | | | DIMENSIONS | | |
|---|---|---|---|---|---|---|---|
| | FOOTING | | WALL | | FOOTING | | WALL |
| | LONG | TRANSV. | LONG | TRANSV. | WIDE | HEIGHT | THICK |
| FB-1 | 3#5 T&B | #5 @12 T&B | 3#5 EF | #5 @12 EF | 23 | 12 | 11 |
| FB-2 | 3#5 T&B | #5 @12 T&B | 3#5 EF | #5 @12 EF | 23 | 12 | 11 |
| FB-3 | 3#5 T&B | #5 @12 T&B | 3#5 EF | #5 @12 EF | * | 12 | * |
| FB-4 | 3#5 T&B | #5 @12 T&B | 3#5 EF | #5 @12 EF | * | 12 | * |
| FB-5 | 4#5 T&B | #5 @12 T&B | 3#5 EF | #5 @12 EF | 35 | 12 | 19 |
| FB-6 | 4#5 T&B | #5 @12 T&B | 3#5 EF | #5 @12 EF | 35 | 12 | 19 |
| FB-7 | 3#5 T&B | #5 @12 T&B | 3#5 EF | #5 @12 EF | 23 | 12 | 11 |
| FB-8 | 3#5 T&B | #5 @12 T&B | 3#5 EF | #5 @12 EF | 23 | 12 | 11 |
| FB-9 | 3#5 T&B | #5 @12 T&B | 3#5 EF | #5 @12 EF | 23 | 12 | 11 |
| FB-10 | 3#5 T&B | #5 @12 T&B | 3#5 EF | #5 @12 EF | 23 | 12 | 11 |
| FB-11 | 3#5 T&B | #5 @12 T&B | 3#5 EF | #5 @12 EF | 23 | 12 | 11 |
| FB-12 | 3#5 T&B | #5 @12 T&B | 3#5 EF | #5 @12 EF | 23 | 12 | 11 |
| FB-13 | 3#5 T&B | #5 @12 T&B | 3#5 EF | #5 @12 EF | 23 | 12 | 11 |
| FB-14 | 3#5 T&B | #5 @12 T&B | 3#5 EF | #5 @12 EF | 20 | 12 | 8 |
| FB-15 | 3#5 T&B | #5 @12 T&B | 3#5 EF | #5 @12 EF | 20 | 12 | 8 |
| FB-16 | 3#5 T&B | #5 @12 T&B | 3#5 EF | #5 @12 EF | 20 | 12 | 8 |
| FB-17 | 3#5 T&B | #5 @12 T&B | 3#5 EF | #5 @12 EF | 20 | 12 | 8 |

* SEE PLAN

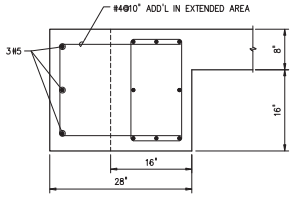


DETAIL 1
1" = 1'-0"

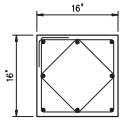


TYPICAL COLUMN SECTION

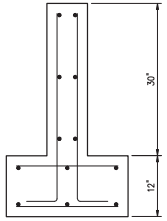


WALL FOOTING TYPICAL SECTION

| NO. | DATE | ISSUED FOR | BY |
|---|---|---|---|

DESIGNED J.P.S.
DRAWN G.P.B.
CHECKED A.F.H.
PROJ. ENGR. G.A.B.

JEAN PAUL SILVA P.E.
No. 66522

HAZEN AND SAWYER
Environmental Engineers & Scientists
4000 Hollywood Boulevard, Suite 750N
Hollywood, Florida 33021
Certificate of Authorization Number: 2771

SCALE NTS

CLIENTS PROJECT: –
ENGINEERS PROJECT: 44238-004
CAD REFERENCE: 44238-004BP3-S12

NORTH MIAMI FLORIDA
CITY OF NORTH MIAMI
PUBLIC WORKS UTILITIES

WINSON WATER TREATMENT PLANT
BID PACKAGE 3: WTP REHABILITATION
NEW ADMINISTRATION BUILDING
BEAM AND COLUMN SCHEDULES

DATE: JUNE 2014
SHEET: 152 OF 335
DRAWING: S-12

PERMITTING

PLOT DATE: 6/10/2014 4:20 p.m. BY: HSCALZ
XREFs= ..\Titlock\44238-004-BP3-TB
File = H:\44238-004\Drawings\Bid Package 3 - WTP Rehab\Struct\44238-004BP3-S12 Saved by cangulo Save date = 6/9/2014 8:55 p.m.

PHOTO 1
NTS

PHOTO 2
NTS

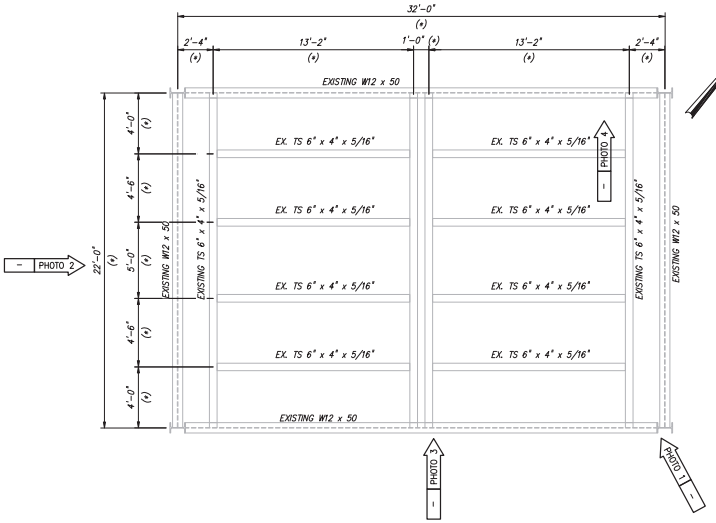


FRAMING PLAN (SUPPORT FRAME AT EL. 36.00'±)
1/4" = 1'-0"

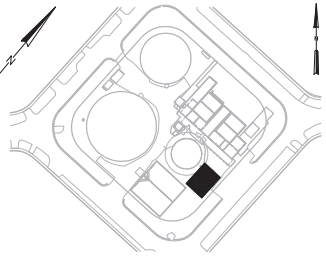

LOCATION MAP

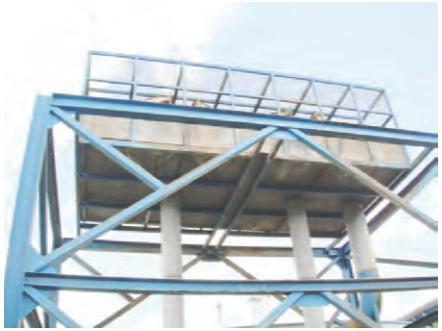

PHOTO 3
NTS

PHOTO 4
NTS

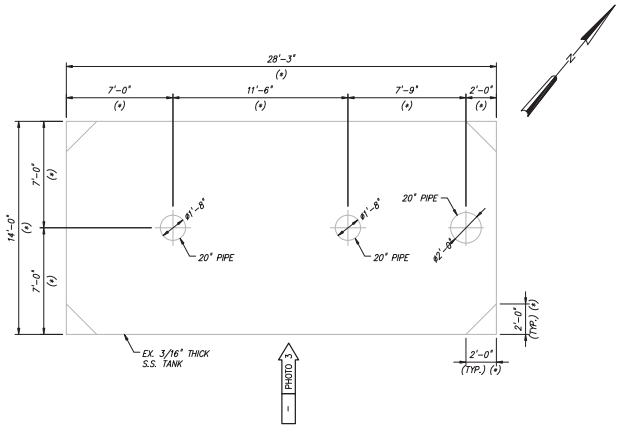


TANK PLAN AT EL. 40.00'±
1/4" = 1'-0"

GENERAL NOTES:

1. LIMITED RECORD DRAWINGS EXIST FOR THIS STRUCTURE AND/OR AREA. REFERENCE THE APPENDIX "RECORD DRAWINGS" FOR AVAILABLE INFORMATION. THE RECORD DRAWINGS ARE PROVIDED FOR INFORMATIONAL PURPOSES. PHOTOS PROVIDED FOR GENERAL INFORMATION PURPOSES.
2. THE CONTRACTOR SHALL FIELD VERIFY ALL EXISTING CONDITIONS PRIOR TO BID PER THE REQUIREMENTS OF DIVISION 1 OF THE SPECIFICATIONS.
3. CONTRACTOR RETAINS FULL RESPONSIBILITY FOR FIELD VERIFICATION OF ALL ABOVE GROUND IMPROVEMENTS TO BE REMOVED FOR THIS WORK. SUCH VERIFICATION SHALL INCLUDE: STRUCTURAL, ARCHITECTURAL, HVCA, PLUMBING, ELECTRICAL, IRRIGATION, CONTROLS, FREE STANDING EQUIPMENT, LANDSCAPING, AND ANY AND ALL OTHER EXISTING IMPROVEMENTS WITHIN THE BOUNDARY OF THE WORK WHETHER SHOW HEREIN OR NOT.
4. FOR BELOW GRADE IMPROVEMENTS TO BE REMOVED REFERENCE APPLICABLE CIVIL AND ELECTRICAL DRAWINGS ACCORDINGLY.
5. REFER TO SPECIFICATIONS SECTION ENTITLED "DEMOLITION OF EXISTING FACILITIES".
6. PRE-BID ACCESS TO THE SITE SHALL BE COORDINATED BY THE CONTRACTOR UPON REQUEST THROUGH A CONTACT TO BE DETERMINATED AT THE CITY OF NORTH MIAMI.

1/4"=1'-0"

| NO. | DATE | ISSUED FOR | BY |
|---|---|---|---|

DESIGNED J.P.S.
DRAWN C.C.P
CHECKED A.F.H.
PROJ. ENGR. G.A.B.

JEAN PAUL SILVA P.E.
No. 66522

HAZEN AND SAWYER
Environmental Engineers & Scientists
4000 Hollywood Boulevard, Suite 750N
Hollywood, Florida 33021
Certificate of Authorization Number: 2771

SCALE: AS NOTED

CLIENTS PROJECT: –
ENGINEERS PROJECT: 44238-004
CAD REFERENCE: 44238-004BP3-S13

CITY OF NORTH MIAMI
PUBLIC WORKS UTILITIES

WINSON WATER TREATMENT PLANT
BID PACKAGE 3: WTP REHABILITATION
AERATOR EXISTING
PLAN AND PHOTOS

DATE: JUNE 2014
SHEET: 153 OF 335
DRAWING: S-13

PERMITTING

PLOT DATE: 6/10/2014 4:24 p.m. BY: HSCALI2
XREFs= ..\Tblock\44238-004-BP3-TB
File = H:\44238-004\Drawings\Bid Package 3 - WTP Rehab\Struct\44238-004BP3-S13 Saved by HScali1 Save date = 6/9/2014 7:13 p.m.

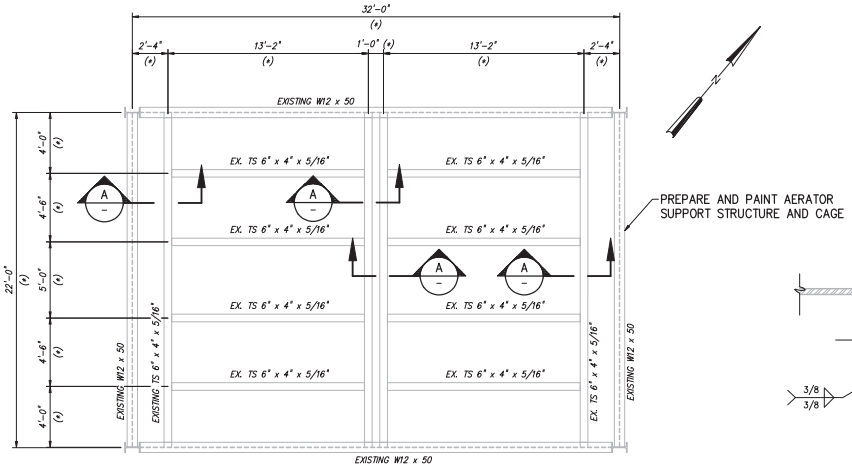


FRAMING PLAN (SUPPORT FRAME AT EL. 36.00'±)
1/4" = 1'-0"

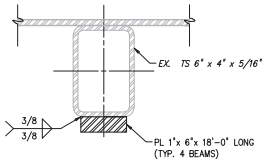


SECTION A
3" = 1'-0"

NOTES:

1. THE OWNER SHALL BY-PASS THE AERATOR AND CONVEY WATER FROM THE WELL FIELD DIRECTLY TO THE LIME CONTACTOR DURING THE INSTALLATION OF THE PROPOSED REINFORCING PLATES. REFERENCE THE SPECIFICATION SECTION ENTITLED "SUMMARY OF WORK" FOR CONSTRUCTION SEQUENCING CONSTRAINS.

LEGEND:

EXISTING

PROPOSED

1/4"=1'-0"

1 0 1 2 3 7'

| NO. | DATE | ISSUED FOR | BY |
|---|---|---|---|

DESIGNED J.P.S.
DRAWN G.P.B.
CHECKED A.F.H.
PROJ. ENGR. G.A.B.

JEAN PAUL SILVA P.E.
No. 66522

HAZEN AND SAWYER
Environmental Engineers & Scientists
4000 Hollywood Boulevard, Suite 750N
Hollywood, Florida 33021
Certificate of Authorization Number: 2771

SCALE: AS NOTED

CLIENTS PROJECT: –
ENGINEERS PROJECT: 44238-004
CAD REFERENCE: 44238-004BP3-S14

NORTH MIAMI FLORIDA
CITY OF NORTH MIAMI
PUBLIC WORKS UTILITIES

WINSON WATER TREATMENT PLANT
BID PACKAGE 3: WTP REHABILITATION
AERATOR SUPPORT STRUCTURE IMPROVEMENTS
PLAN AND SECTIONS

DATE: JUNE 2014
SHEET: 154 OF 335
DRAWING: S-14

PERMITTING

PLOT DATE: 6/10/2014 4:27 p.m. BY: HSCALI2
XREFs= ..\Tblock\44238-004-BP3-TB
File = H:\44238-004\Drawings\Bid Package 3 - WTP Rehab\Struct\44238-004BP3-S14 Saved by HaCali2 Save date = 6/9/2014 6:05 p.m.

INSTALLATION DETAIL
NTS

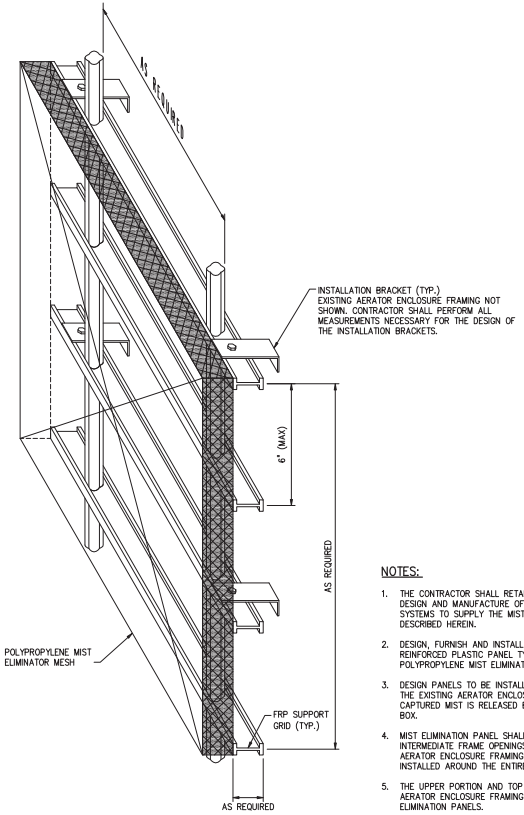


MIST ELIMINATOR PANEL
DETAIL 1
NTS –

NOTES:

1. THE CONTRACTOR SHALL RETAIN A SPECIALIST IN THE DESIGN AND MANUFACTURE OF MIST ELIMINATION SYSTEMS TO SUPPLY THE MIST ELIMINATION PANEL DESCRIBED HEREIN.
2. DESIGN, FURNISH AND INSTALL FIBERGLASS REINFORCED PLASTIC PANEL TYPE INSERTS FILLED WITH POLYPROPYLENE MIST ELIMINATOR MESH.
3. DESIGN PANELS TO BE INSTALLED ON THE SIDE OF THE EXISTING AERATOR ENCLOSURE FRAMING SO THAT CAPTURED MIST IS RELEASED BACK INTO THE AERATOR BOX.
4. MIST ELIMINATION PANEL SHALL BE INSTALLED ON THE INTERMEDIATE FRAME OPENINGS OF THE EXISTING AERATOR ENCLOSURE FRAMING. PANELS SHALL BE INSTALLED AROUND THE ENTIRE AERATOR.
5. THE UPPER PORTION AND TOP OF THE EXISTING AERATOR ENCLOSURE FRAMING SHALL NOT HAVE MIST ELIMINATION PANELS.
6. THE MANUFACTURER SHALL BE COMPLETELY RESPONSIBLE FOR THE DESIGN OF THE MIST PANELS ALONG WITH ALL NECESSARY ACCESSORIES FOR ATTACHING THE MIST PANELS TO THE EXISTING AERATOR ENCLOSURE FRAMING.
7. DESIGN SHALL REMOVE 95 PERCENT OF WATER DROPLETS GREATER THAN 50 MICRONS IN DIAMETER WITH A HEADLOSS OF APPROXIMATELY 2-INCHES IN A CONTINUOUS 25 MILE PER HOUR WIND.
8. MIST ELIMINATOR PANELS SHALL BE DESIGNED TO BE EASILY REMOVABLE BY WATER PLANT PERSONNEL. PANEL MAXIMUM WEIGHT SHALL BE 50 POUNDS.
9. IF DIRECTED BY THE OWNER IN WRITING, THE CONTRACTOR SHALL REMOVE THE MIST ELIMINATOR PANELS DURING A HURRICANE WATCH AND REINSTALL THE PANELS AFTER THE HURRICANE THREAT HE PASSED, AT NO ADDITIONAL COST TO THE OWNER.
10. MANUFACTURER: KIMRE, INC., OR EQUAL.
11. CONTRACTOR SHALL SUBMIT SHOP DRAWINGS INDICATING CONSTRUCTION AND ANCHORAGE DETAILS.

| NO. | DATE | ISSUED FOR | BY |
|---|---|---|---|
| 1 | 4/1/14 | 100% QA COMMENTS | H.J.V. |

DESIGNED J.P.S.
DRAWN C.C.P.
CHECKED A.H.
PROJ. ENGR. J.P.S.

JEAN PAUL SILVA P.E.
No. 66522

HAZEN AND SAWYER
Environmental Engineers & Scientists
4000 Hollywood Boulevard, Suite 750N
Hollywood, Florida 33021
Certificate of Authorization Number: 2771

SCALE NTS

CLIENTS PROJECT: –
ENGINEERS PROJECT: 44238-004
CAD REFERENCE: 44238-004BP3-S15

NORTH MIAMI FLORIDA
CITY OF NORTH MIAMI
PUBLIC WORKS UTILITIES

WINSON WATER TREATMENT PLANT
BID PACKAGE 3: WTP REHABILITATION
AERATOR MIST PANEL IMPROVEMENTS
SECTIONS AND DETAILS

DATE: JUNE 2014
SHEET: 155 OF 335
DRAWING: S-15

PERMITTING

PLOT DATE: 6/10/2014 4:29 p.m. BY: HSCALI2
XREFs= .\Tblock\44238-004-BP3-TB
File = H:\44238-004\Drawings\Bid Package 3 - WTP Rehab\Struct\44238-004BP3-S15 Saved by HsCali2 Save date = 6/9/2014 7:56 p.m.

OCCUPANCY CLASSIFICATION:

SPECIAL PURPOSE INDUSTRIAL OCCUPANCY (FFPC 40.1.4.1.2)

OCCUPANT LOAD:

TOTAL OCCUPANT LOAD = 2
OCCUPANT LOAD FACTOR = NA (FFPC TABLE 7-3-1-2)

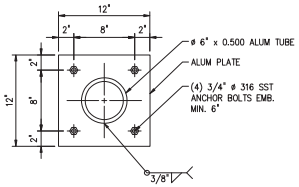


DETAIL 1 (1 1/2"-1'-0")

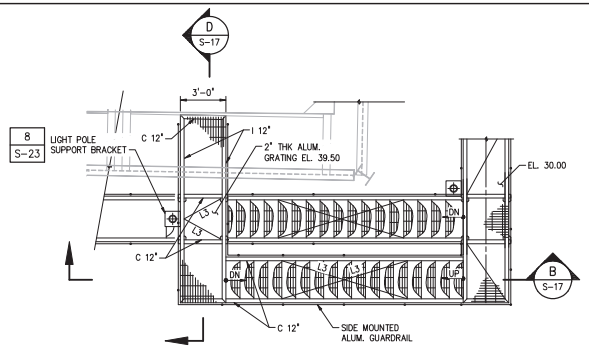


PLAN
1/4"-1'-0"

KEYED NOTE:

1. THE CONTRACTOR SHALL COORDINATE WITH THE SUPPLIER FOR THE SPECIFICATION ENTITLED "LIME CONTACTOR REHABILITATION" TO ENSURE THAT THE CENTERLINES AND TOP OF GRATING ELEVATION OF THE ACCESS STAIRS AND LIME CONTACTOR WALKWAY No.2 MATCH.

LEGEND:

| | | | |
|---|---|---|---|
| L3 | DENOTES | = | L 3"x 3"x .375 ALUM. |
| C12 | DENOTES | = | C 12"x 7.41" ALUM. |
| I 12 | DENOTES | = | I 12"x 11.7" ALUM. |
| 6"SQ | DENOTES | = | 6"x .500 SQUARE TUBE ALUM. |
| C6 | DENOTES | = | C 6" x 2.83" ALUM. |

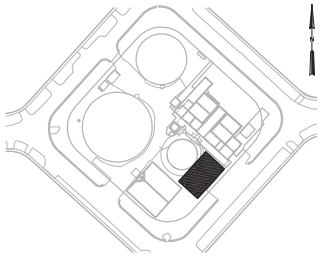

LOCATION MAP

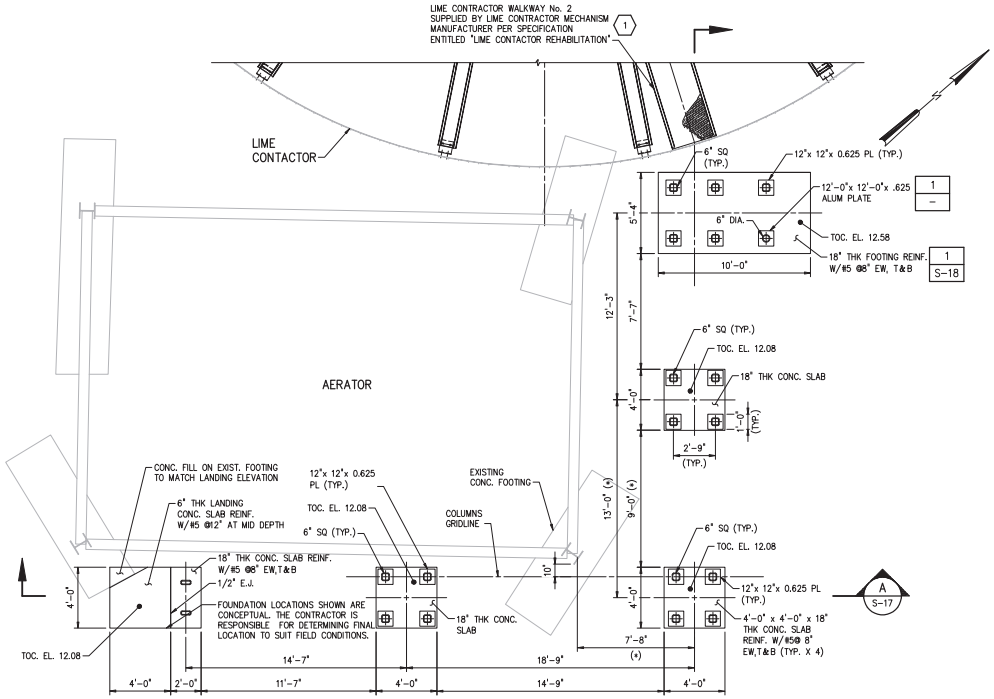


FOUNDATION PLAN
1/4"-1'-0"

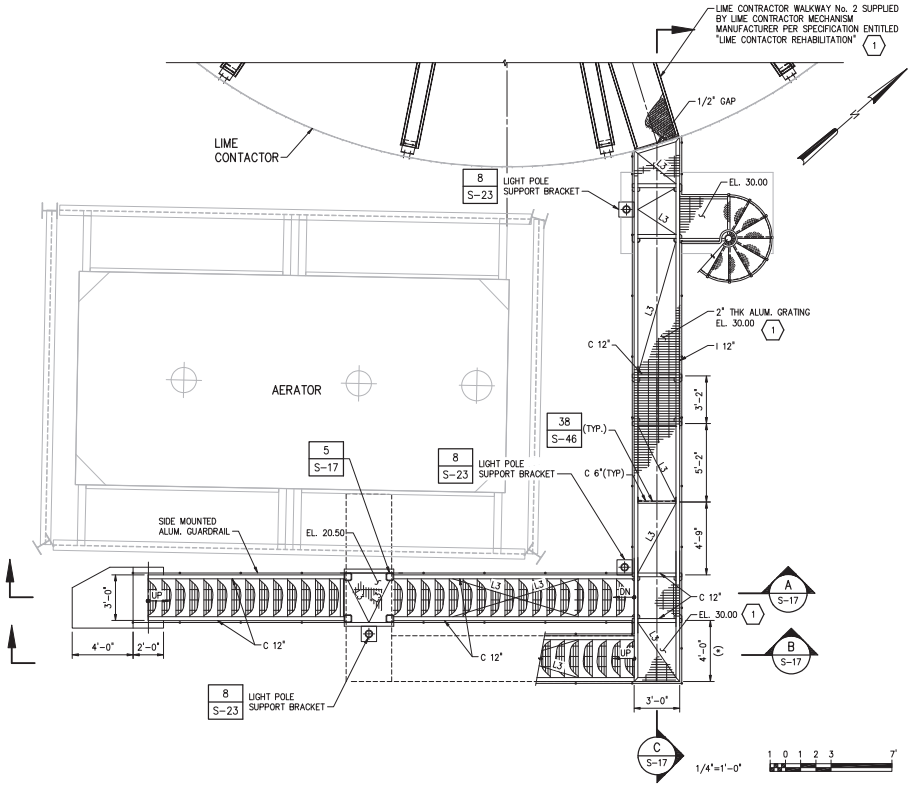


| NO. | DATE | ISSUED FOR | BY |
|---|---|---|---|

DESIGNED J.P.S.
DRAWN C.C.P.
CHECKED A.H.
PROJ. ENGR. J.P.S.

JEAN PAUL SILVA P.E.
No. 66522

HAZEN AND SAWYER
Environmental Engineers & Scientists
4000 Hollywood Boulevard, Suite 750N
Hollywood, Florida 33021
Certificate of Authorization Number: 2771

SCALE 1/4"-1'-0"

CLIENTS PROJECT: –
ENGINEERS PROJECT: 44238-004
CAD REFERENCE: 44238-004BP3-S16

NORTH MIAMI FLORIDA
CITY OF NORTH MIAMI
PUBLIC WORKS UTILITIES

WINSON WATER TREATMENT PLANT
BID PACKAGE 3: WTP REHABILITATION

AERATOR/LIME CONTACTOR ACCESS STAIRS SECTIONS AND DETAILS –SHEET 1

DATE: JUNE 2014
SHEET: 156 OF 335
DRAWING: S-16

PERMITTING

PLOT DATE: 6/10/2014 4:31 p.m. BY: HSCALZ

XREFs= ..\Tblock\44238-004-BP3-TB,..\..\..\Drawings\Bid Package 3 - WTP Rehab\Base-BP3\S-BP3-AeratorLime Access-Plan

File = H:\44238-004\Drawings\Bid Package 3 - WTP Rehab\Struct\44238-004BP3-S16 Saved by cofuentes Save date = 6/9/2014 9:06 p.m.

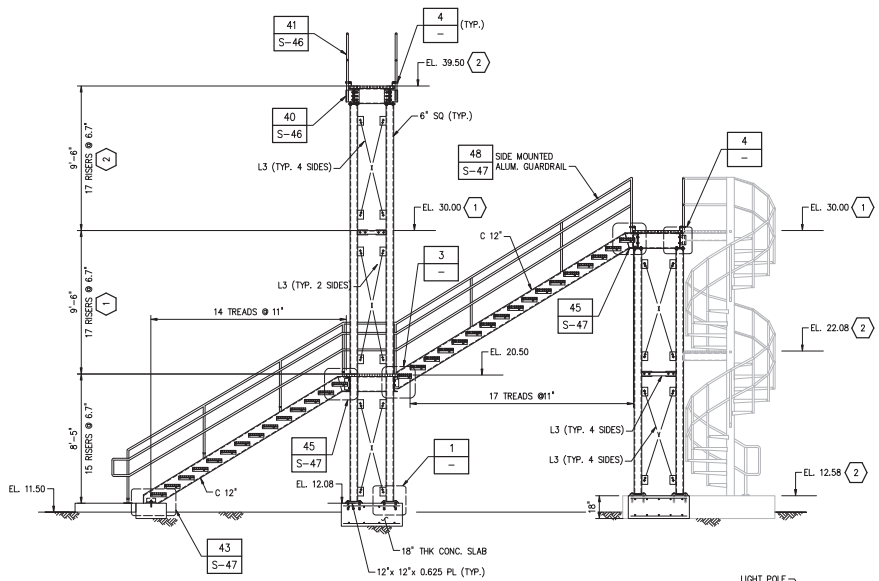


**SECTION** A S-16
1/4" = 1'-0"

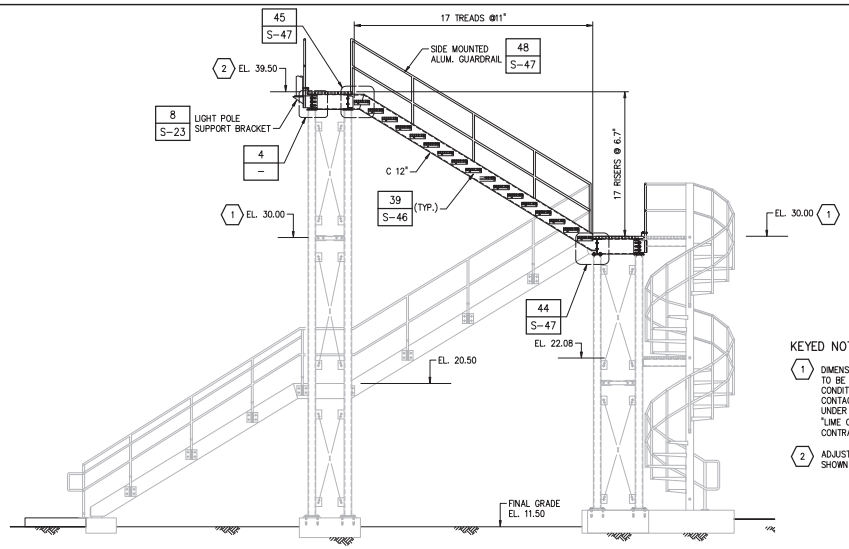


**SECTION** B S-16
1/4" = 1'-0"

KEYED NOTE:

(1) DIMENSION (OR ELEVATION) MAY NEED TO BE ADJUSTED TO SUIT FIELD CONDITIONS AND MATCH THE LIME CONTACTOR WALKWAY No.2 SUPPLIED UNDER THE SPECIFICATION ENTITLED "LIME CONTACTOR REHABILITATION". CONTRACTOR SHALL COORDINATE.

(2) ADJUST THE DIMENSION (OR ELEVATION) SHOWN TO SUIT FIELD CONDITIONS.

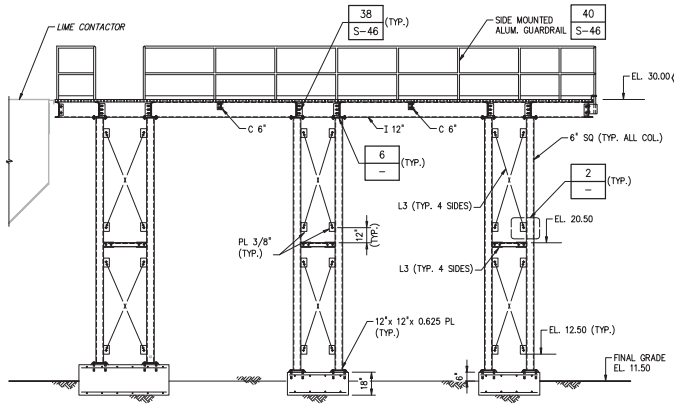


**SECTION** C S-16
1/4" = 1'-0"

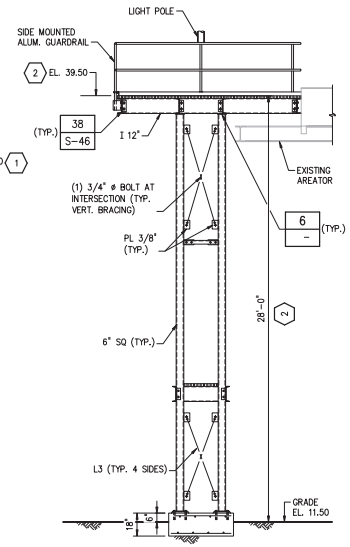


**SECTION** D S-16
1/4" = 1'-0"

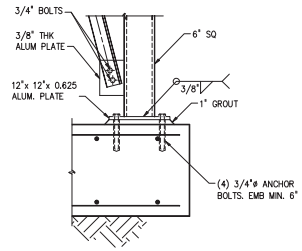


**DETAIL** 1 –
1" = 1'-0"

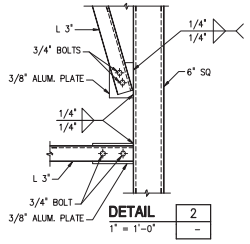


**DETAIL** 2 –
1" = 1'-0"

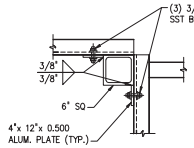


**DETAIL** 5 S-16
1" = 1'-0"

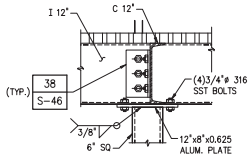


**DETAIL** 6 –
1" = 1'-0"

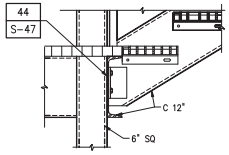


**DETAIL** 3 –
1" = 1'-0"

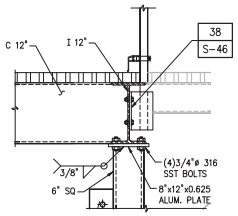


**DETAIL** 4 –
1" = 1'-0"

LEGEND:

| | | | |
|---|---|---|---|
| L3 | DENOTES | = | L 3"x 3"x .375 ALUM. |
| C12 | DENOTES | = | C 12"x 7.41" ALUM. |
| I12 | DENOTES | = | I 12"x 11.7" ALUM. |
| 6"SQ | DENOTES | = | 6"x .500 SQUARE TUBE |
| C6 | DENOTES | = | C6 x 2.83 ALUM. |

ALL BOLTS AND ANCHOR BOLTS SHALL BE 316 SST

1"=1'-0" 12" 6 0 1'

1/4"=1'-0" 1 0 1 2 3 7'

| NO. | DATE | ISSUED FOR | BY |
|---|---|---|---|

DESIGNED J.P.S.
DRAWN C.C.P
CHECKED A.F.H.
PROJ. ENGR. G.A.B.

JEAN PAUL SILVA P.E.
No. 66522

**HAZEN AND SAWYER**
Environmental Engineers & Scientists
4000 Hollywood Boulevard, Suite 750N
Hollywood, Florida 33021
Certificate of Authorization Number: 2771

SCALE: AS NOTED

CLIENTS PROJECT: –
ENGINEERS PROJECT: 44238-004
CAD REFERENCE: 44238-004BP3-S17

NORTH MIAMI FLORIDA
CITY OF NORTH MIAMI
PUBLIC WORKS UTILITIES

WINSON WATER TREATMENT PLANT
BID PACKAGE 3: WTP REHABILITATION

AERATOR/LIME CONTACTOR ACCESS STAIRS
SECTIONS AND DETAILS –SHEET 2

DATE: JUNE 2014
SHEET: 157 OF 335
DRAWING: S-17

PERMITTING

PLOT DATE: 6/10/2014 4:35 p.m. BY: HSCALZ

XREFs= ..\Tblock\44238-004-BP3-TB,..\..\..\Drawings\Bid Package 3 - WTP Rehab\Base-BP3\S-BP3-AeratorLime Access-Sections,..\Base-BP3\M-BP3-LimeContactor-Sections

File = H:\44238-004\Drawings\Bid Package 3 - WTP Rehab\Struct\44238-004BP3-S17 Saved by ccifuentes Save date = 6/9/2014 8:12 p.m.

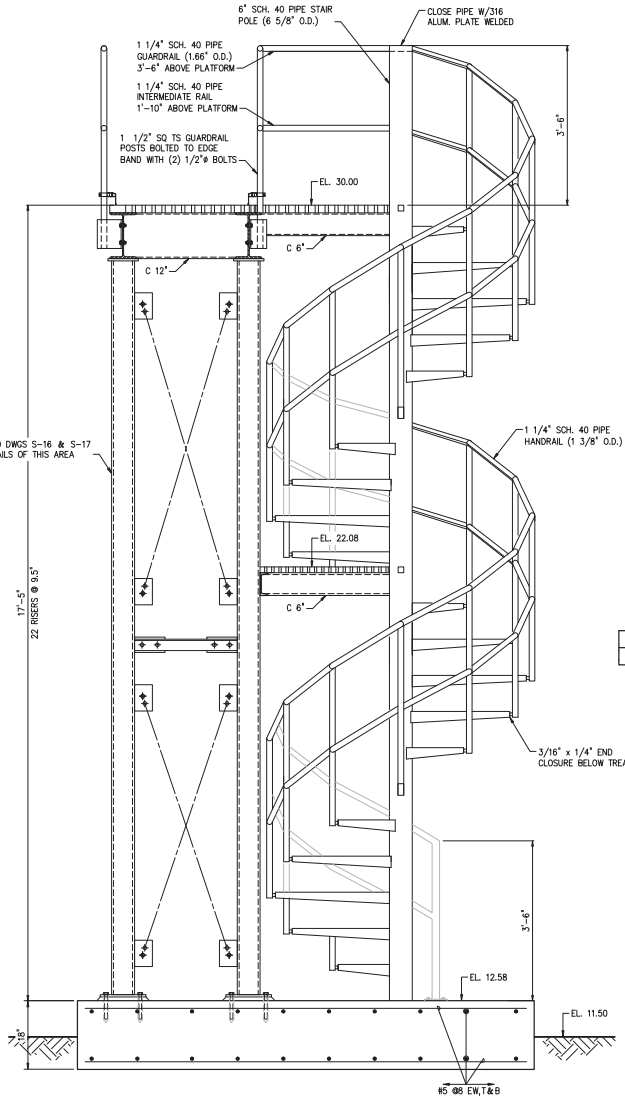


SECTION A 3/4"=1'-0"

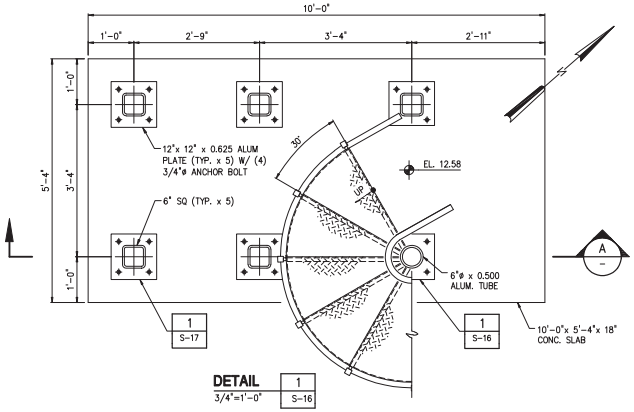


DETAIL 1 / 1 S-16
3/4"=1'-0"

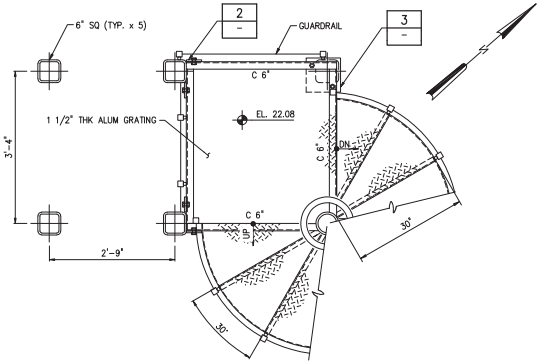


PLAN AT INTERMEDIATE LANDING
3/4"=1'-0"

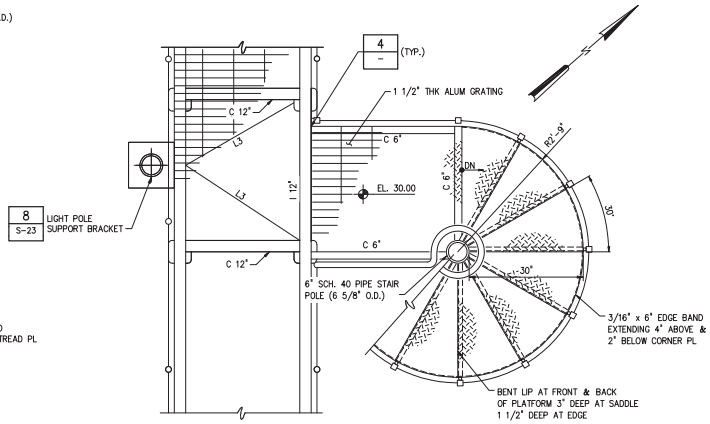


PLAN OF STAIR AT TOP
3/4"=1'-0"

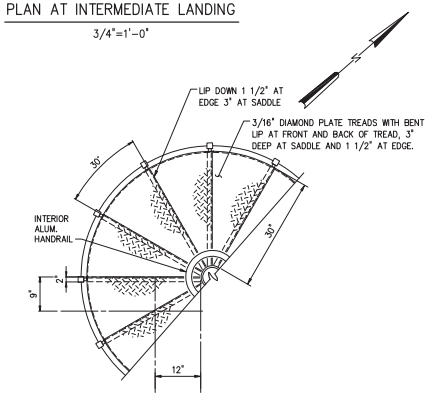


TREAD DETAILS
3/4"=1'-0"

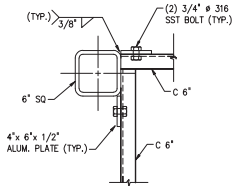


DETAIL 2 / 1 1/2"=1'-0"

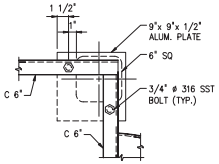


DETAIL 3 / 1 1/2"=1'-0"

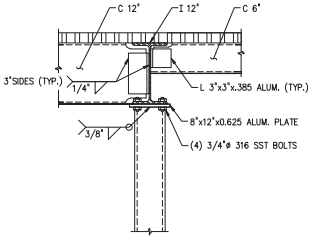


DETAIL 4 / 1"=1'-0"

NOTES:

1. ALL ELEMENTS SHALL BE ALUMINUM.
2. BOLTS AND ANCHOR BOLTS SHALL BE 316 SST.

LEGEND:

| | | | |
|---|---|---|---|
| L3 | DENOTES | = | L 3"x 3"x .375 ALUM. |
| C12 | DENOTES | = | C 12"x 7.41" ALUM. |
| I 12 | DENOTES | = | I 12"x 11.7" ALUM. |
| 6"SQ | DENOTES | = | 6"x .500 SQUARE TUBE ALUM. |
| C6 | DENOTES | = | C 6" x 2.83" ALUM. |

1"=1'-0" 12" 6 0 1'
1 1/2"=1'-0" 4" 0 1'
3/4"=1'-0" 6" 0 1 2'

| NO. | DATE | ISSUED FOR | BY |
|---|---|---|---|

DESIGNED J.P.S.
DRAWN C.C.P.
CHECKED A.F.H.
PROJ. ENGR. G.A.B.

JEAN PAUL SILVA P.E.
No. 66522

HAZEN AND SAWYER
Environmental Engineers & Scientists
4000 Hollywood Boulevard, Suite 750N
Hollywood, Florida 33021
Certificate of Authorization Number: 2771

SCALE 3/4"=1'-0"

CLIENTS PROJECT: –
ENGINEERS PROJECT: 44238-004
CAD REFERENCE: 44238-004BP3-S18

NORTH MIAMI FLORIDA
CITY OF NORTH MIAMI
PUBLIC WORKS UTILITIES

WINSON WATER TREATMENT PLANT
BID PACKAGE 3: WTP REHABILITATION

AERATOR/LIME CONTACTOR ACCESS STAIRS
SECTIONS AND DETAILS –SHEET 3

DATE: JUNE 2014
SHEET: 158 OF 335
DRAWING: S-18

PERMITTING

PLOT DATE: 6/10/2014 4:38 p.m. BY: HSCALZ
XREFs= ..\Block\44238-004-BP3-TB
File = H:\44238-004\Drawings\Bid Package 3 - WTP Rehab\Struct\44238-004BP3-S18 Saved by cofuentes Save date = 6/9/2014 7:36 p.m.

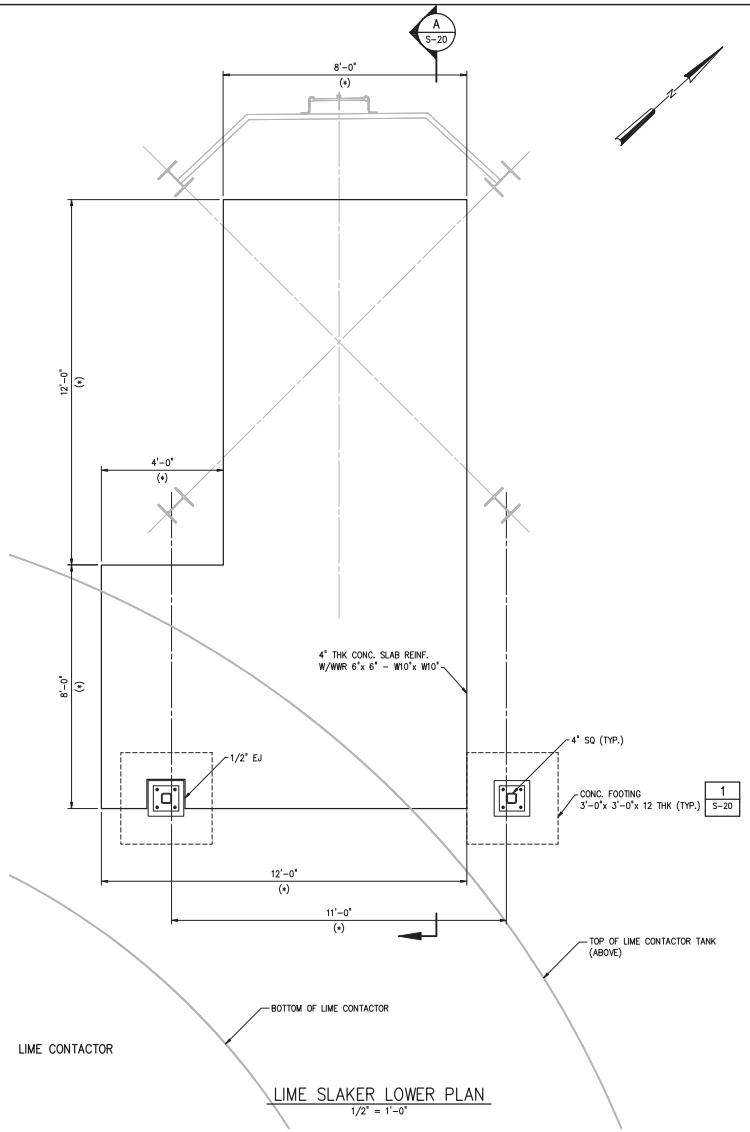


LIME SLAKER LOWER PLAN
1/2" = 1'-0"

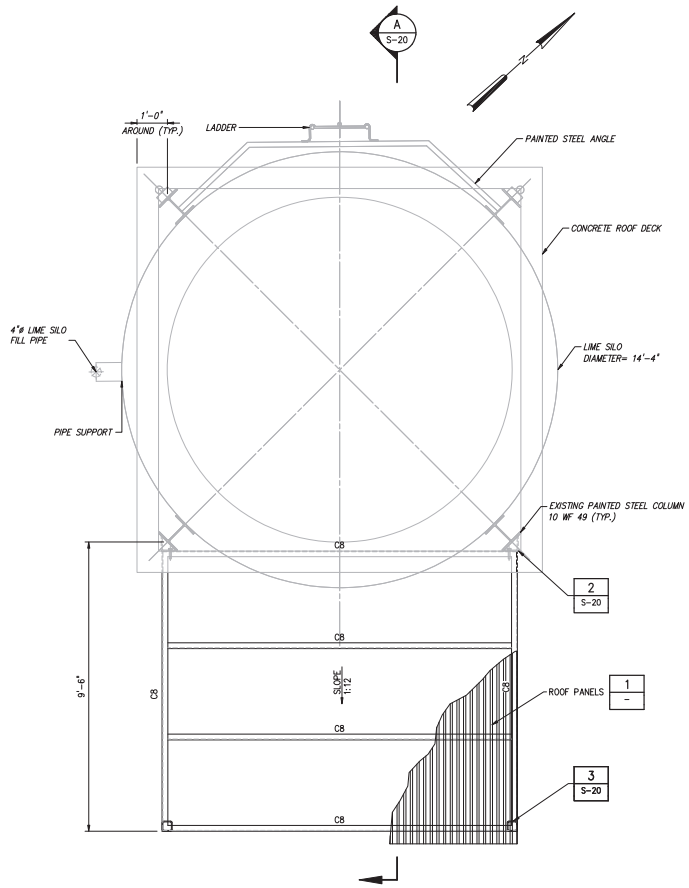


INTERMEDIATE PLAN
1/2" = 1'-0"

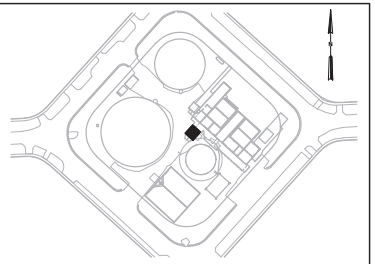

LOCATION MAP

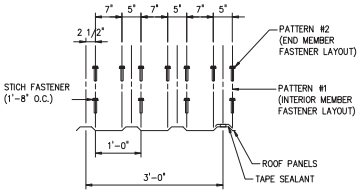


**DETAIL** 1
3/4" = 1'-0" -

NOTES:

1. ROOF PANELS SHALL HAVE AN UNDERWRITERS LABORATORIES UPLIFT RATING OF CLASS 90.
2. ROOF PANELS SHALL BE OF THE RIBBED TYPE WITH 1 1/4" RIB HEIGHT (MIN.) THE PANEL MATERIAL SHALL BE MIN. 24 GAGE STEEL CONFORMING TO ASTM A 525 WITH A MINIMUM YIELD OF 42,000 PSI. FINISH SHALL BE ZINC-ALUMINUM ALLOY COATED PER ASTM A 792. ROOF PANELS SHALL BE PBR RIBBED BY UNITED STRUCTURES OF AMERICA. BUTLERIB II ROOF SYSTEM BY BUTLER MANUFACTURING COMPANY, OR APPROVED EQUAL.
3. THE PANELS SHALL BE PRECISION ROLL-FRAMED TO PROVIDE WIDTH COVERAGE OF 2-FEET MINIMUM.

LEGEND:

4"SQ DENOTES = ALUM. 4"x 4"x .500 SQUARE TUBE
C8 DENOTES = C 8" x 2.29" ALUM.
*EXISTING*
PROPOSED

1/2"=1'-0" 12" 0 1 3'

| NO. | DATE | ISSUED FOR | BY |
|---|---|---|---|
| 1 | 4/1/14 | 100% QA COMMENTS | H.J.V. |

DESIGNED J.P.S.
DRAWN G.P.B.
CHECKED A.H.
PROJ. ENGR. J.P.S.

JEAN PAUL SILVA P.E.
No. 66522

HAZEN AND SAWYER
Environmental Engineers & Scientists
4000 Hollywood Boulevard, Suite 750N
Hollywood, Florida 33021
Certificate of Authorization Number: 2771

SCALE 1/2"=1'-0"

CLIENTS PROJECT: -
ENGINEERS PROJECT: 44238-004
CAD REFERENCE: 44238-004BP3-S19

NORTH MIAMI FLORIDA
CITY OF NORTH MIAMI
PUBLIC WORKS UTILITIES

WINSON WATER TREATMENT PLANT
BID PACKAGE 3: WTP REHABILITATION
LIME SLAKER AND SILO MODIFICATIONS PLANS

DATE: JUNE 2014
SHEET: 159 OF 335
DRAWING: S-19

PERMITTING

PLOT DATE: 6/10/2014 4:42 p.m. BY: HSCALI2

XREFs= ..\Tblock\44238-004-BP3-TB,..\..\Bid Package 3 - WTP Rehab\Base-BP3\S-BP3-LimeSilo-LowerPlan,..\Base-BP3\S-BP3-LimeSilo-IntermediatePlan

File = H:\44238-004\Drawings\Bid Package 3 - WTP Rehab\Struct\44238-004BP3-S19 Saved by HaCali2 Save date = 6/9/2014 6:52 p.m.

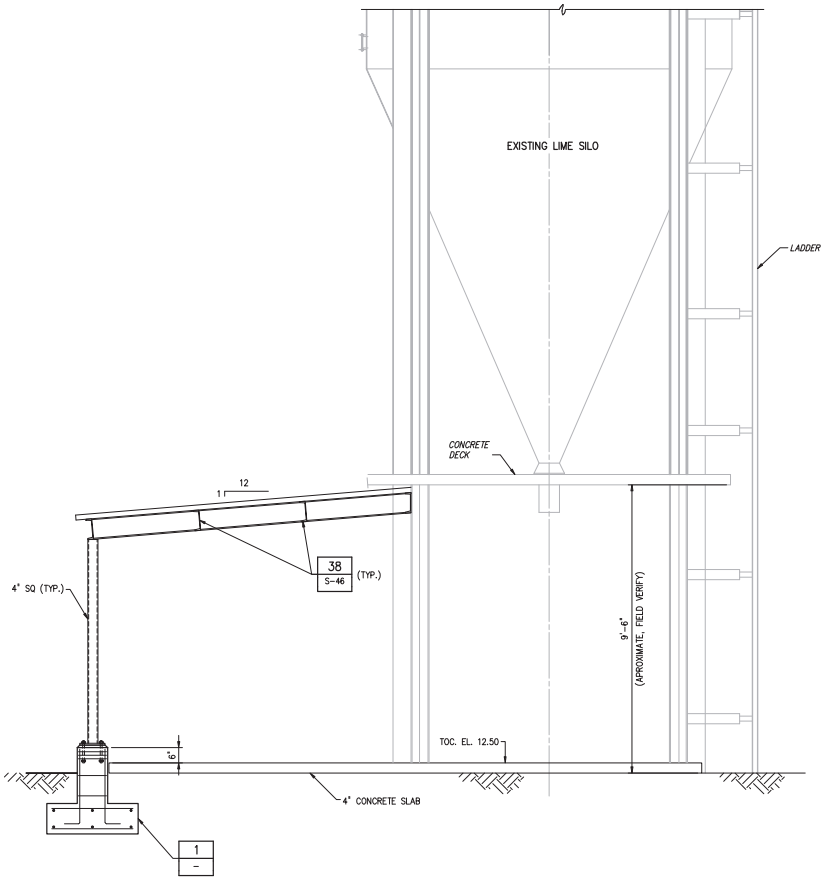


SECTION A S-19
1/2" = 1'-0"

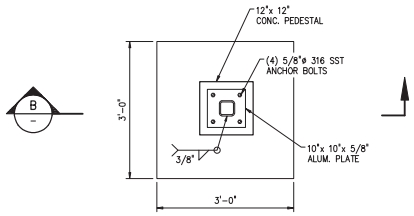


PLAN

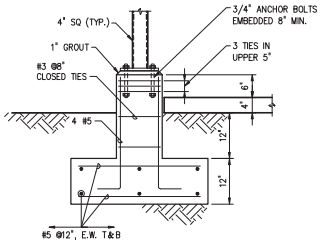


SECTION B

DETAIL 1 S-19
3/4" = 1'-0"

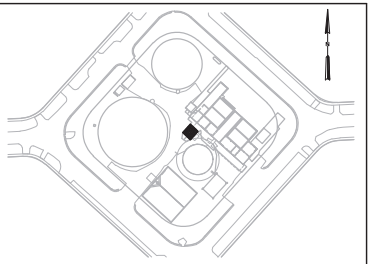

LOCATION MAP

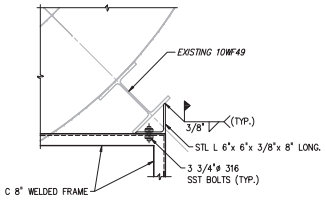


NOTE:
STEEL ANGLE SHALL BE PAINTED AFTER WELDING. PLACE RUBBER GASKET BETWEEN STEEL ANGLE AND ALUMINUM FRAME.

DETAIL 2 S-19
1" = 1'-0"

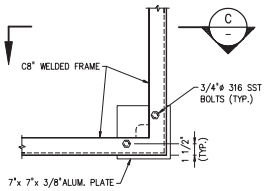


PLAN

DETAIL 3 S-19
1 1/2" = 1'-0"

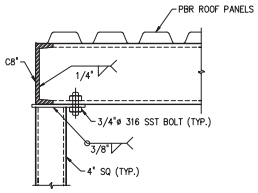


SECTION C

LEGEND:

4"SQ DENOTES = ALUM. 4"x 4"x .500 SQUARE TUBE
C8 DENOTES = C 8" x 2.29" ALUM.
*EXISTING*
PROPOSED

3/4"=1'-0" 6" 0 1 2'
1"=1'-0" 12" 6 0 1'
1 1/2"=1'-0" 4" 0 1'
1/2"=1'-0" 12" 0 1 3'

| NO. | DATE | ISSUED FOR | BY |
|---|---|---|---|
| 1 | 4/1/14 | 100% QA COMMENTS | H.J.V. |

DESIGNED J.P.S.
DRAWN G.P.B.
CHECKED A.H.
PROJ. ENGR. J.P.S.

JEAN PAUL SILVA P.E.
No. 66522

HAZEN AND SAWYER
Environmental Engineers & Scientists
4000 Hollywood Boulevard, Suite 750N
Hollywood, Florida 33021
Certificate of Authorization Number: 2771

SCALE 1/2"=1'-0"

CLIENTS PROJECT: –
ENGINEERS PROJECT: 44238-004
CAD REFERENCE: 44238-004BP3-S20

NORTH MIAMI FLORIDA
CITY OF NORTH MIAMI
PUBLIC WORKS UTILITIES

WINSON WATER TREATMENT PLANT
BID PACKAGE 3: WTP REHABILITATION
LIME SLAKER AND SILO MODIFICATIONS
SECTIONS AND DETAILS

DATE: JUNE 2014
SHEET: 160 OF 335
DRAWING: S-20

PERMITTING

PLOT DATE: 6/10/2014 4:46 p.m. BY: HSCALI2
XREFs= ..\Block\44238-004-BP3-TB
File = H:\44238-004\Drawings\Bid Package 3 - WTP Rehab\Struct\44238-004BP3-S20 Saved by HaCali2 Save date = 6/9/2014 8:08 p.m.

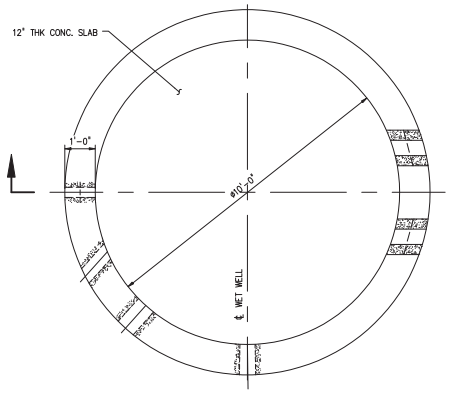


BOTTOM PLAN
1/2" = 1'-0"

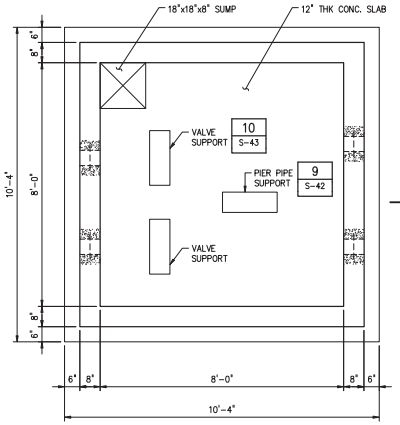


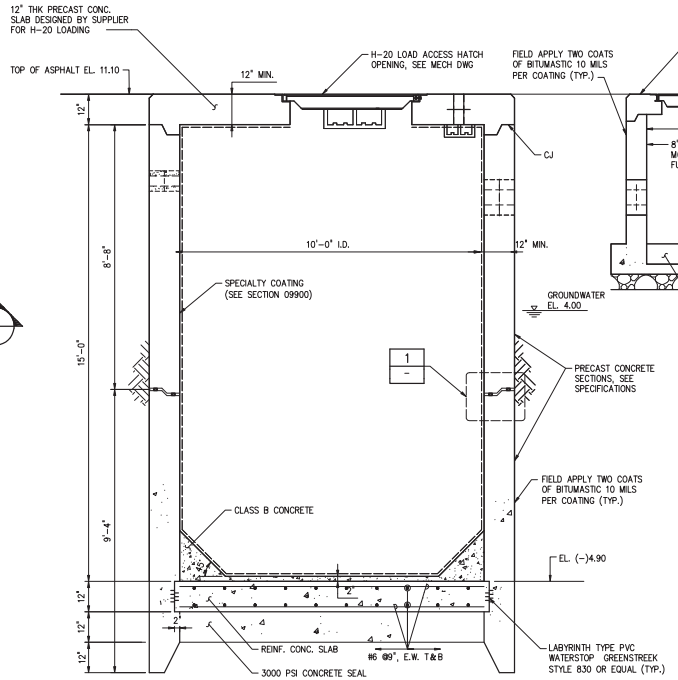


SECTION A
1/2" = 1'-0"

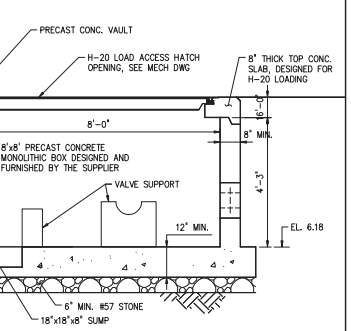


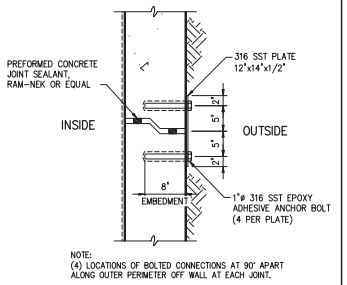


NOTE:
(4) LOCATIONS OF BOLTED CONNECTIONS AT 90° APART ALONG OUTER PERIMETER OFF WALL AT EACH JOINT.

DETAIL 1
1"=1'-0"

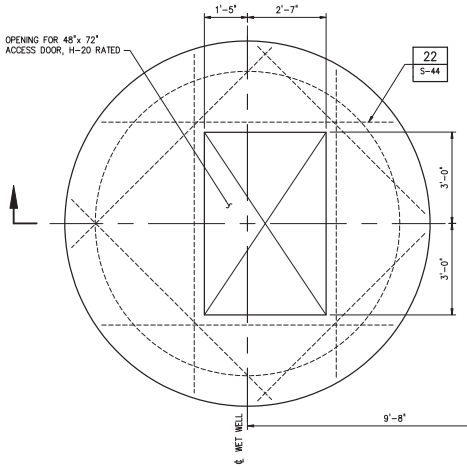


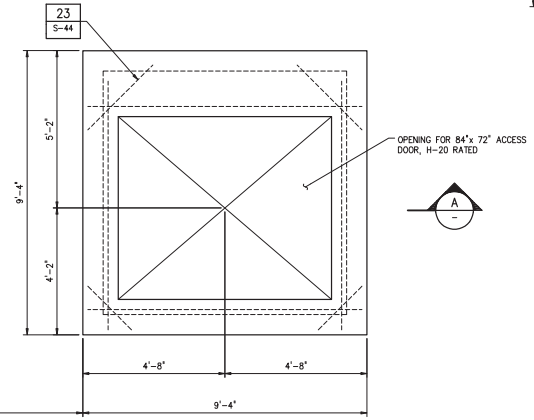


TOP PLAN
1/2" = 1'-0"

GENERAL NOTES:

1. ALL PRECAST CONCRETE SECTIONS SHALL CONFORM TO ASTM C478.
2. CONTRACTOR SHALL SUBMIT SHOP DRAWING FOR ENGINEER'S REVIEW AND APPROVAL. SHOP DRAWING SHALL INCLUDE DESIGN CALCULATIONS SIGNED AND SEALED BY A PROFESSIONAL ENGINEER REGISTERED IN THE STATE OF FLORIDA.
3. PRECAST CONCRETE SECTION SHALL BE DESIGNED FOR THE FOLLOWING LOADS:
   a. LATERAL SOIL PRESSURE.
   b. GROUNDWATER ELEVATION = 1.10
   c. COMPACTION OF SOIL DURING BACKFILL.
   d. ADDITIONAL STRESSES INDUCED BY TRANSPORTATION AND HANDLING DURING INSTALLATION.
   e. LOADS PER NOTE G-4 OF DRAWING S-01
   f. PIPE THRUST= 500 Lb.
4. SUGGESTED CONSTRUCTION SEQUENCE:
   g. CLEAR AND GRUB AREA.
   h. PLACE PRECAST CONCRETE SECTION ON SAND AND EXCAVATE WITHIN WALLS TO SINK SECTION.
   i. PLACE ADDITIONAL PRECAST CONCRETE SECTION AND INSTALL CONNECTION PLATES EXCAVATE WITHIN WALL TO SINK ADDITIONAL SECTION, CONTINUE WITH ADDITIONAL PRECAST SECTIONS UNTIL FINAL POSITION IS REACHED.
   j. PLACE SEAL CONCRETE WITHIN BOTTOM SECTION
   k. ONCE SEAL CONCRETE REACHES DESIGN STRENGTH, PUMP STRUCTURE DRY.

1/2"=1'-0" 12" 0 1 3'

| NO. | DATE | ISSUED FOR | BY |
|---|---|---|---|
| 1 | 4/1/14 | 100% QA COMMENTS | H.J.V. |

DESIGNED J.P.S.
DRAWN G.P.B.
CHECKED A.F.H.
PROJ. ENGR. G.A.B.

JEAN PAUL SILVA P.E.
No. 66522

HAZEN AND SAWYER
Environmental Engineers & Scientists
4000 Hollywood Boulevard, Suite 750N
Hollywood, Florida 33021
Certificate of Authorization Number: 2771

SCALE 1/2"=1'-0"

CLIENTS PROJECT: –
ENGINEERS PROJECT: 44238-004
CAD REFERENCE: 44238-004BP3-S21

NORTH MIAMI FLORIDA
CITY OF NORTH MIAMI
PUBLIC WORKS UTILITIES

WINSON WATER TREATMENT PLANT
BID PACKAGE 3: WTP REHABILITATION
WASTE LIME SLUDGE PUMP STATION
PROPOSED PLAN, SECTIONS AND DETAILS

DATE: JUNE 2014
SHEET: 161 OF 335
DRAWING: S-21

PERMITTING

PLOT DATE: 6/10/2014 4:49 p.m. BY: HSCALI2

XREFs= ..\Thlock\44238-004-BP3-TB,..\Base-BP3\S-BP3-SludgePS-Section,..\Base-BP3\S-BP3-SludgePS-Plan,..\Base-BP3\S-BP3-SludgePS-TopPlan

File = H:\44238-004\Drawings\Bid Package 3 - WTP Rehab\Struct\44238-004BP3-S21 Saved by HaCali2 Save date = 6/9/2014 8:44 p.m.

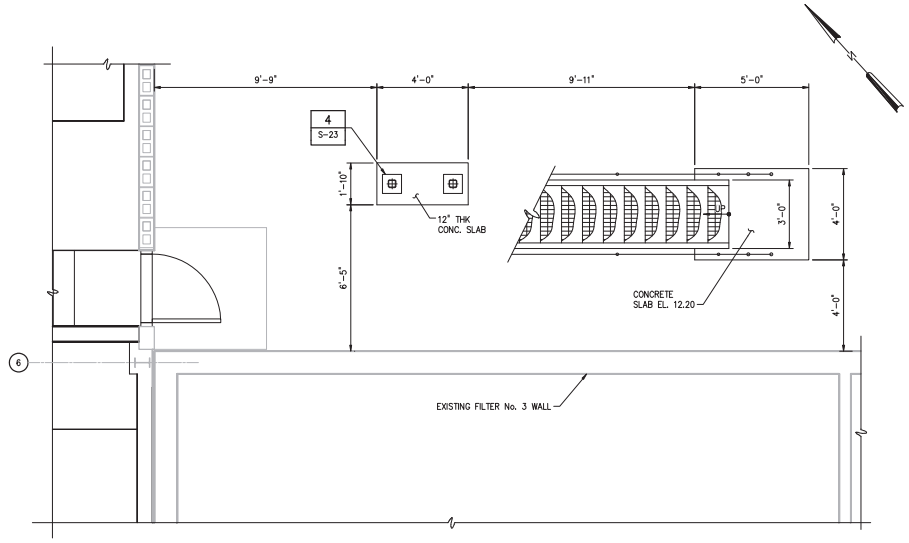


BOTTOM PLAN

3/8"=1'-0"

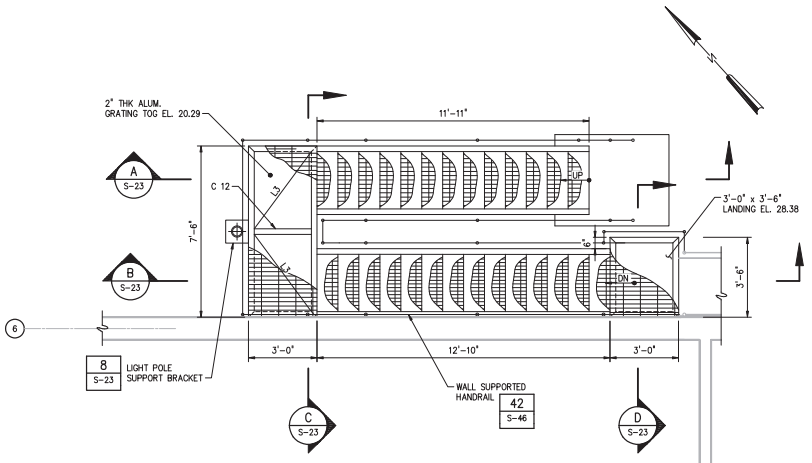


TOP PLAN

3/8"=1'-0"

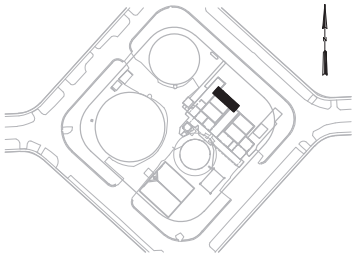

LOCATION MAP

LEGEND:

L3 DENOTES = L 3"x 3"x .375 ALUM.
C12 DENOTES = C 12"x 7.41" ALUM.
4"SQ DENOTES = 4"x .500 SQUARE TUBE ALUM.

*EXISTING*

PROPOSED

3/8"=1'-0" 12" 0 1 2 4'

| NO. | DATE | ISSUED FOR | BY |
|---|---|---|---|

DESIGNED J.P.S.
DRAWN C.C.P
CHECKED A.F.H.
PROJ. ENGR. G.A.B.

JEAN PAUL SILVA P.E.
No. 66522

HAZEN AND SAWYER
Environmental Engineers & Scientists
4000 Hollywood Boulevard, Suite 750N
Hollywood, Florida 33021
Certificate of Authorization Number: 2771

SCALE 3/8"=1'-0"

CLIENTS PROJECT: –
ENGINEERS PROJECT: 44238-004
CAD REFERENCE: 44238-004BP3-S22

NORTH MIAMI FLORIDA
CITY OF NORTH MIAMI
PUBLIC WORKS UTILITIES

WINSON WATER TREATMENT PLANT
BID PACKAGE 3: WTP REHABILITATION
EXISTING FILTER CONTROL ROOM
STAIRS PLAN

DATE: JUNE 2014
SHEET: 162 OF 335
DRAWING: S-22

PERMITTING

PLOT DATE: 6/10/2014 4:52 p.m. BY: HSCHULZ

XREFs= ..\Titlock\44238-004-BP3-TB,..\Base-BP3\S-BP3-ChemHand-Plan

File = H:\44238-004\Drawings\Bid Package 3 - WTP Rehab\Struct\44238-004BP3-S22 Saved by fcarvajal Save date = 6/9/2014 9:18 p.m.

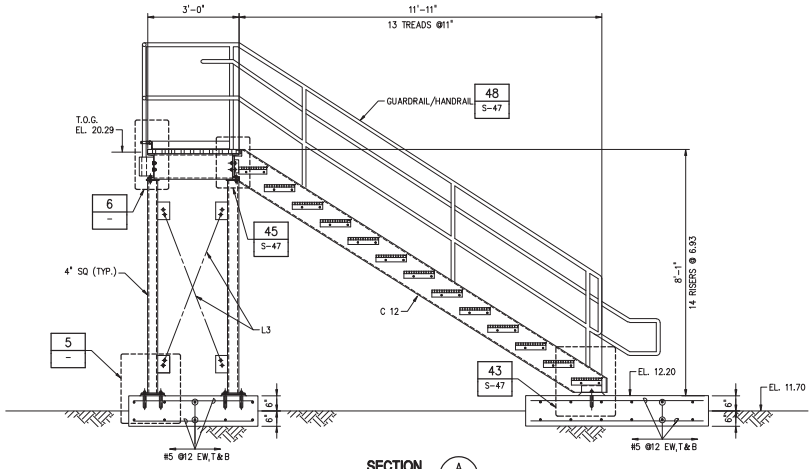


SECTION A S-22
1/2" = 1'-0"

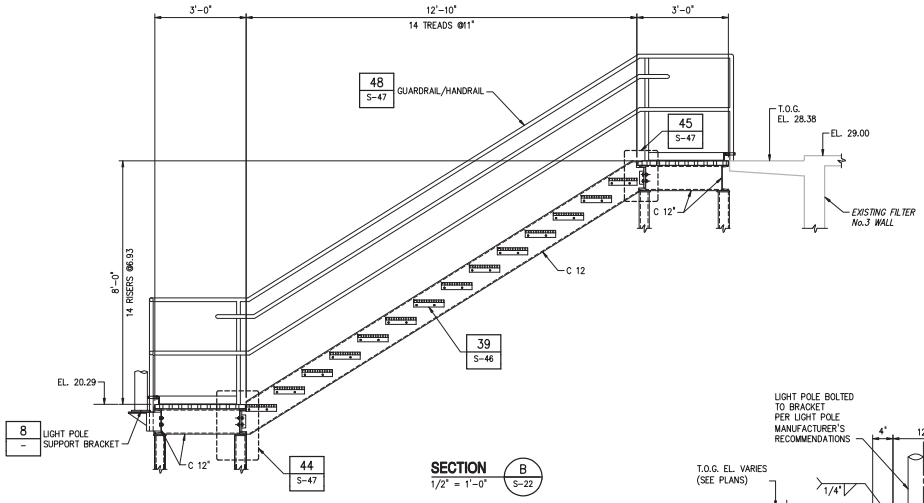


SECTION B S-22
1/2" = 1'-0"

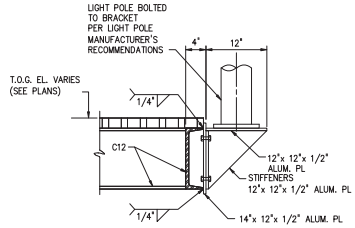


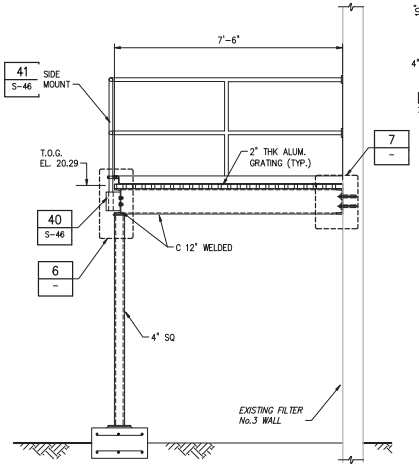


SECTION C S-22
1/2" = 1'-0"

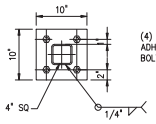


DETAIL 4 S-22
1" = 1'-0"

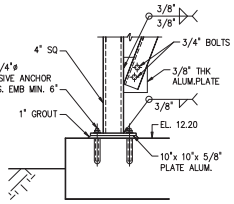


DETAIL 5 –
1" = 1'-0"

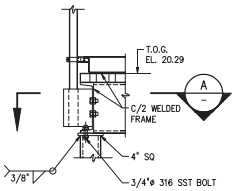


DETAIL 6 –
1" = 1'-0"

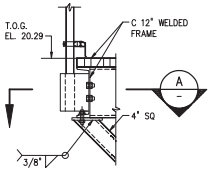


DETAIL 9 –
1" = 1'-0"

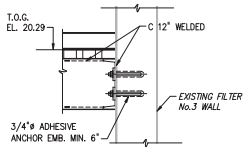


DETAIL 7 –
1" = 1'-0"

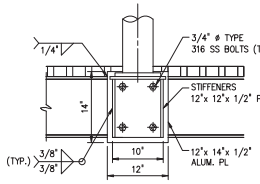


DETAIL 8 S-16 | 8 S-21
1" = 1'-0"

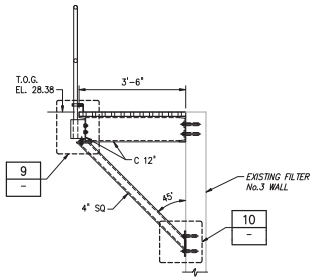


SECTION D S-22
1/2" = 1'-0"

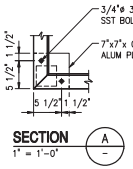


SECTION A –
1" = 1'-0"

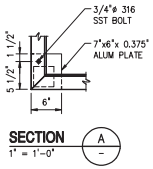


SECTION A –
1" = 1'-0"

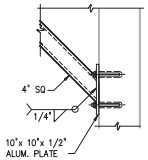


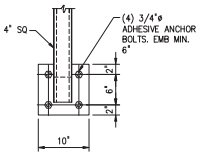


DETAIL 10 –
1" = 1'-0"

LEGEND:

| | | | |
|---|---|---|---|
| L3 | DENOTES | = | L 3"x 3"x .375 ALUM. |
| C12 | DENOTES | = | C 12"x 7.41" ALUM. |
| I12 | DENOTES | = | I 12"x 11.7" ALUM. |
| 4"SQ | DENOTES | = | 4"x .500 SQUARE TUBE |

ALL BOLTS AND ANCHOR BOLTS MUST BE 316 SST

*EXISTING*

PROPOSED

1"=1'-0" 12" 6 0 1'

1/2"=1'-0" 12" 0 1 3'

| NO. | DATE | ISSUED FOR | BY |
|---|---|---|---|

DESIGNED J.P.S.
DRAWN G.P.B.
CHECKED A.F.H.
PROJ. ENGR. G.A.B.

JEAN PAUL SILVA P.E.
No. 66522

**HAZEN AND SAWYER**
Environmental Engineers & Scientists
4000 Hollywood Boulevard, Suite 750N
Hollywood, Florida 33021
Certificate of Authorization Number: 2771

SCALE: AS NOTED

CLIENTS PROJECT: –
ENGINEERS PROJECT: 44238-004
CAD REFERENCE: 44238-004BP3-S23

NORTH MIAMI FLORIDA
CITY OF NORTH MIAMI
PUBLIC WORKS UTILITIES

WINSON WATER TREATMENT PLANT
BID PACKAGE 3: WTP REHABILITATION

FILTER/OPS BUILDINGS STAIRS ELEVATIONS AND DETAILS

DATE: JUNE 2014
SHEET: 163 OF 335
DRAWING: S-23

PERMITTING

PLOT DATE: 6/10/2014 4:55 p.m. BY: HSCALZ
XREFs= ..\Block\44238-004-BP3-TB
File = H:\44238-004\Drawings\Bid Package 3 - WTP Rehab\Struct\44238-004BP3-S23 Saved by cofuentes Save date = 6/9/2014 7:08 p.m.

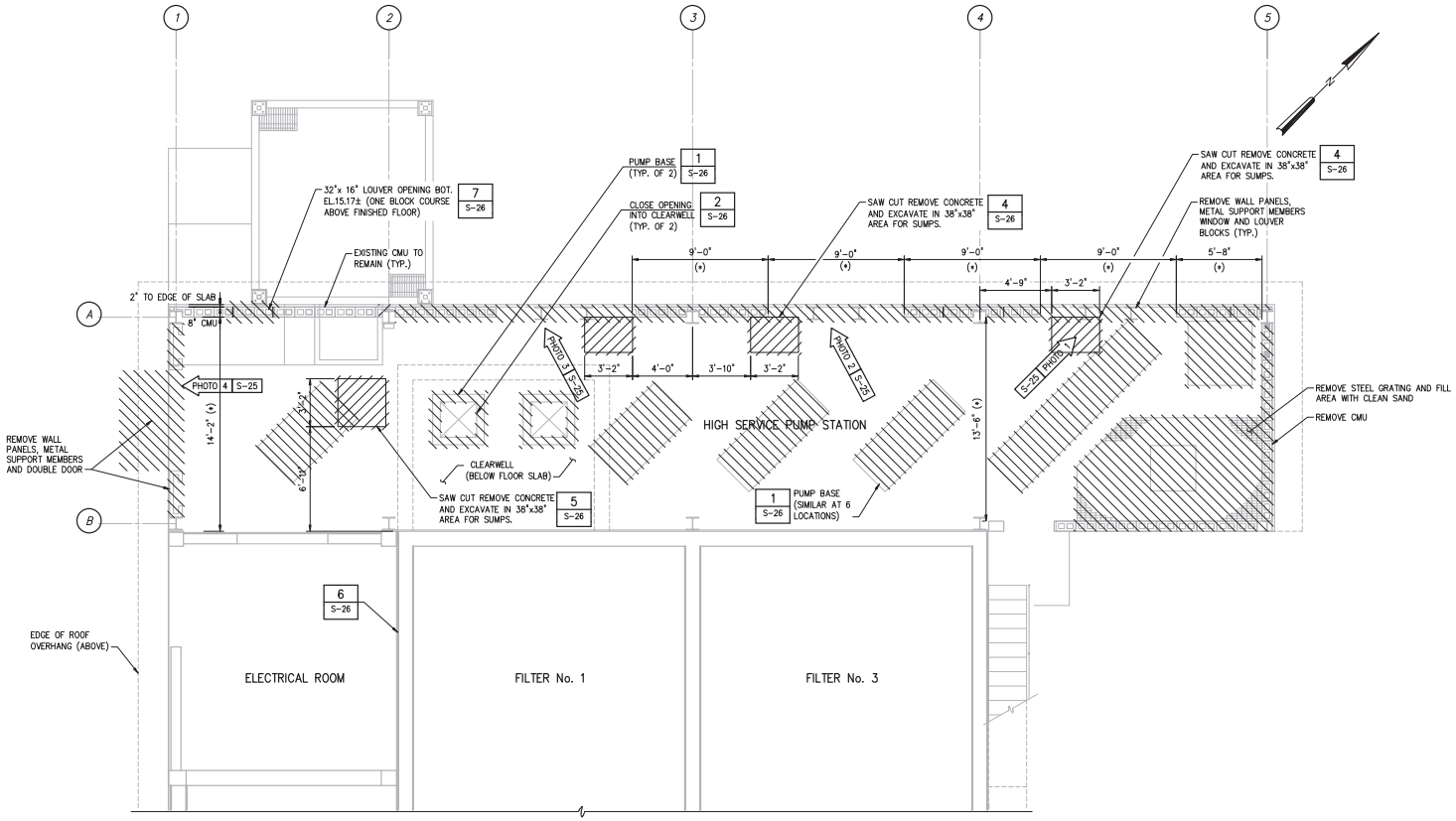


EXISTING PLAN

1/4"=1'-0"

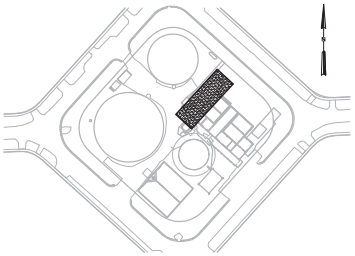

LOCATION MAP

GENERAL NOTES:

1. LIMITED RECORD DRAWINGS EXIST FOR THIS STRUCTURE AND/OR AREA. PHOTOS PROVIDED FOR GENERAL INFORMATION PURPOSES. RECORD DRAWINGS FOR INFORMATIONAL PURPOSES ONLY ARE AVAILABLE UPON REQUEST.
2. THE CONTRACTOR SHALL FIELD VERIFY ALL EXISTING CONDITIONS PRIOR TO BID PER THE REQUIREMENTS OF DIVISION 1 OF THE SPECIFICATIONS.
3. CONTRACTOR RETAINS FULL RESPONSIBILITY FOR FIELD VERIFICATION OF ALL ABOVE GROUND IMPROVEMENTS TO BE REMOVED FOR THIS WORK. SUCH VERIFICATION SHALL INCLUDE: STRUCTURAL, ARCHITECTURAL, HVCA, PLUMBING, ELECTRICAL, IRRIGATION, CONTROLS, FREE STANDING EQUIPMENT, LANDSCAPING, AND ANY AND ALL OTHER EXISTING IMPROVEMENTS WITHIN THE BOUNDARY OF THE WORK WHETHER SHOW HEREIN OR NOT.
4. FOR BELOW GRADE IMPROVEMENTS TO BE REMOVED REFERENCE APPLICABLE CIVIL AND ELECTRICAL DRAWINGS ACCORDINGLY.
5. REFER TO SPECIFICATIONS SECTION ENTITLED "DEMOLITION OF EXISTING FACILITIES".
6. PRE-BID ACCESS TO THE SITE SHALL BE COORDINATED BY THE CONTRACTOR UPON REQUEST THROUGH A CONTACT TO BE DETERMINATE AT THE CITY OF NORTH MIAMI.

LEGEND:

PHOTO # – ARROW INDICATES DIRECTION AND POINT OF VIEW OF PHOTO

*EXISTING*

TO BE REMOVED

1/4"=1'-0" 1 0 1 2 3 7'

| NO. | DATE | ISSUED FOR | BY |
|---|---|---|---|

DESIGNED J.P.S.
DRAWN C.A.Z.
CHECKED A.F.H.
PROJ. ENGR. G.A.B.

JEAN PAUL SILVA P.E.
No. 66522

HAZEN AND SAWYER
Environmental Engineers & Scientists
4000 Hollywood Boulevard, Suite 750N
Hollywood, Florida 33021
Certificate of Authorization Number: 2771

SCALE 1/4"=1'-0"

CLIENTS PROJECT: –
ENGINEERS PROJECT: 44238-004
CAD REFERENCE: 44238-004BP3-S24

NORTH MIAMI FLORIDA
CITY OF NORTH MIAMI
PUBLIC WORKS UTILITIES

WINSON WATER TREATMENT PLANT
BID PACKAGE 3: WTP REHABILITATION
HIGH SERVICE PUMP STATION AND ELECTRICAL ROOM 1
STRUCTURAL MODIFICATIONS – SHEET 1

DATE: JUNE 2014
SHEET: 164 OF 335
DRAWING: S-24

PERMITTING

PLOT DATE: 6/10/2014 4:37 p.m. BY: HSCALZ

XREFs= ..\Base-BP3\S-BP1-Filters-Plan-Bottom-X,..\Tblock\44238-004-BP3-TB,..\Base-BP3\S-BP3-ChemHand-Plan

File = H:\44238-004\Drawings\Bid Package 3 - WTP Rehab\Struct\44238-004BP3-S24 Saved by ccifuentes Save date = 6/9/2014 7:13 p.m.

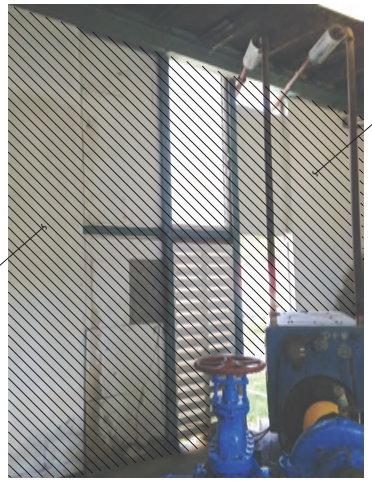


PHOTO 1
NTS

PHOTO 2
NTS

PHOTO 3
NTS

PHOTO 4
NTS

GENERAL NOTES:

1. REFERENCE THE NOTES ON DRAWINGS S-01 AND S-24.

LEGEND:

TO BE REMOVED

| NO. | DATE | ISSUED FOR | BY |
|---|---|---|---|

DESIGNED J.P.S.
DRAWN L.M.S.
CHECKED A.F.H.
PROJ. ENGR. G.A.B.

JEAN PAUL SILVA P.E.
No. 66522

HAZEN AND SAWYER
Environmental Engineers & Scientists
4000 Hollywood Boulevard, Suite 750N
Hollywood, Florida 33021
Certificate of Authorization Number: 2771

SCALE NTS

CLIENTS PROJECT: –
ENGINEERS PROJECT: 44238-004
CAD REFERENCE: 44238-004BP3-S25

NORTH MIAMI FLORIDA
CITY OF NORTH MIAMI
PUBLIC WORKS UTILITIES

WINSON WATER TREATMENT PLANT
BID PACKAGE 3: WTP REHABILITATION
HIGH SERVICE PUMP STATION AND ELECTRICAL ROOM 1
STRUCTURAL MODIFICATIONS – SHEET 2

DATE: JUNE 2014
SHEET: 165 OF 335
DRAWING: S-25

PERMITTING

PLOT DATE: 6/10/2014 5:00 p.m. BY: HSCALIZ
XREFs= ..\Tblock\44238-004-BP3-TB
File = H:\44238-004\Drawings\Bid Package 3 - WTP Rehab\Struct\44238-004BP3-S25 Saved by ccifuentes Save date = 6/9/2014 8:13 p.m.

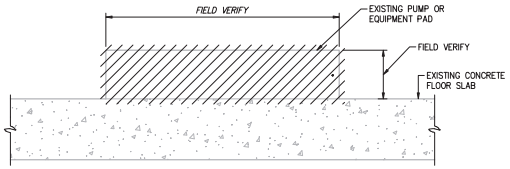


NOTES:

1. REINFORCING STEEL NOT SHOWN FOR CLARITY.
2. CUT AND REMOVE EMBEDDED VERTICAL REINFORCING BARS A MINIMUM OF 1-INCH BELOW THE SURFACE OF THE FLOOR SLAB.
3. AFTER REMOVAL OF THE EXISTING CONCRETE PAD RESTORE THE FLOOR SLAB TO A SMOOTH LEVEL SURFACE USING SIKATOP 122 PLUS, OR EQUAL.

**DETAIL** 1 / S-24
NTS

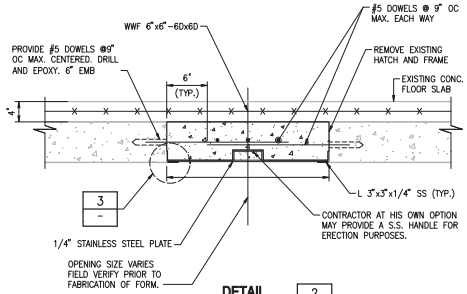


**DETAIL** 2 / S-24
NTS

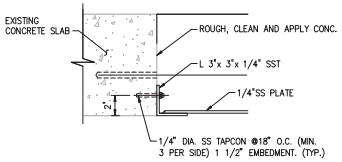


**DETAIL** 3 / -
NTS

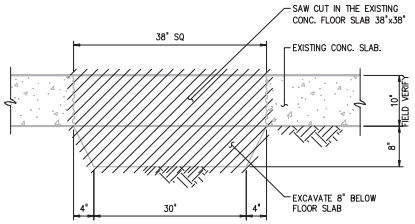


**DETAIL** 4 / S-24
NTS

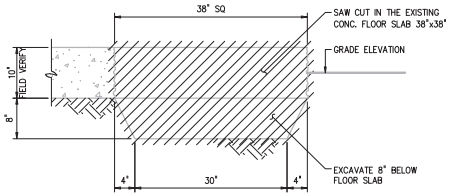


**DETAIL** 5 / S-24
NTS

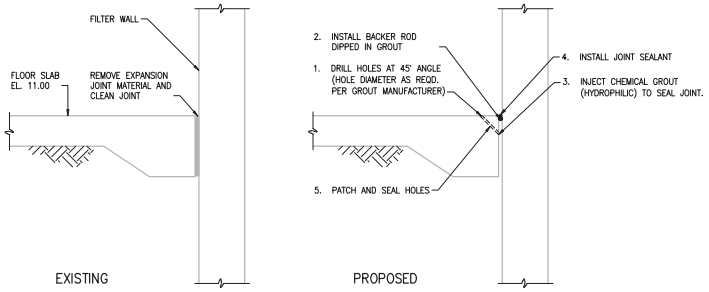


**DETAIL** 6 / S-24
NTS

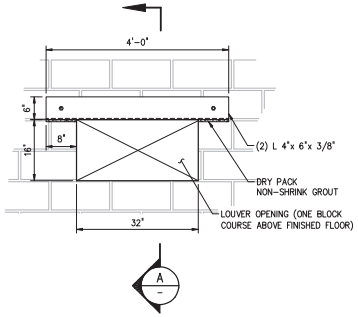


OPENING IN EXISTING WALL

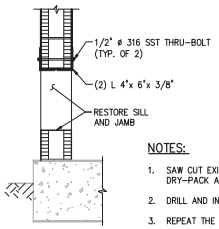


SECTION A

NOTES:

1. SAW CUT EXISTING MASONRY AND INSTALL ONE ANGLE DRY-PACK AT THE ENDS.
2. DRILL AND INSTALL BOLTS AND LOCK WASHERS.
3. REPEAT THE FIRST OPERATION FOR THE SECOND ANGLE.
4. TIGHTEN THE BOLTS USE LOCK WASHERS.
5. DEMOLISH EXISTING MASONRY WITHIN LIMITS SHOWN (MASONRY OPENING.)
6. FINISH WALL ON BOTH SIDES TO MATCH EXISTING ADJACENT WALL

**DETAIL** 7 / S-24
NTS

LEGEND:

- *EXISTING*
- PROPOSED
- TO BE REMOVE

| NO. | DATE | ISSUED FOR | BY |
|---|---|---|---|
| 1 | 4/1/14 | 100% QA COMMENTS | H.J.V. |

DESIGNED J.P.S.
DRAWN C.C.P
CHECKED A.F.H.
PROJ. ENGR. G.A.B.

JEAN PAUL SILVA P.E.
No. 66522

HAZEN AND SAWYER
Environmental Engineers & Scientists
4000 Hollywood Boulevard, Suite 750N
Hollywood, Florida 33021
Certificate of Authorization Number: 2771

SCALE NTS

CLIENTS PROJECT: –
ENGINEERS PROJECT: 44238-004
CAD REFERENCE: 44238-004BP3-S26

NORTH MIAMI FLORIDA
CITY OF NORTH MIAMI
PUBLIC WORKS UTILITIES

WINSON WATER TREATMENT PLANT
BID PACKAGE 3: WTP REHABILITATION
HIGH SERVICE PUMP STATION AND ELECTRICAL ROOM 1 STRUCTURAL MODIFICATIONS – SHEET 3

DATE: JUNE 2014
SHEET: 166 OF 335
DRAWING: S-26

PERMITTING

PLOT DATE: 6/10/2014 5:11 p.m. BY: HSCAL2
XREFs= ..\Tblock\44238-004-BP3-TB
File = H:\44238-004\Drawings\Bid Package 3 - WTP Rehab\Struct\44238-004BP3-S26 Saved by HsCell2 Save date = 6/9/2014 6:47 p.m.

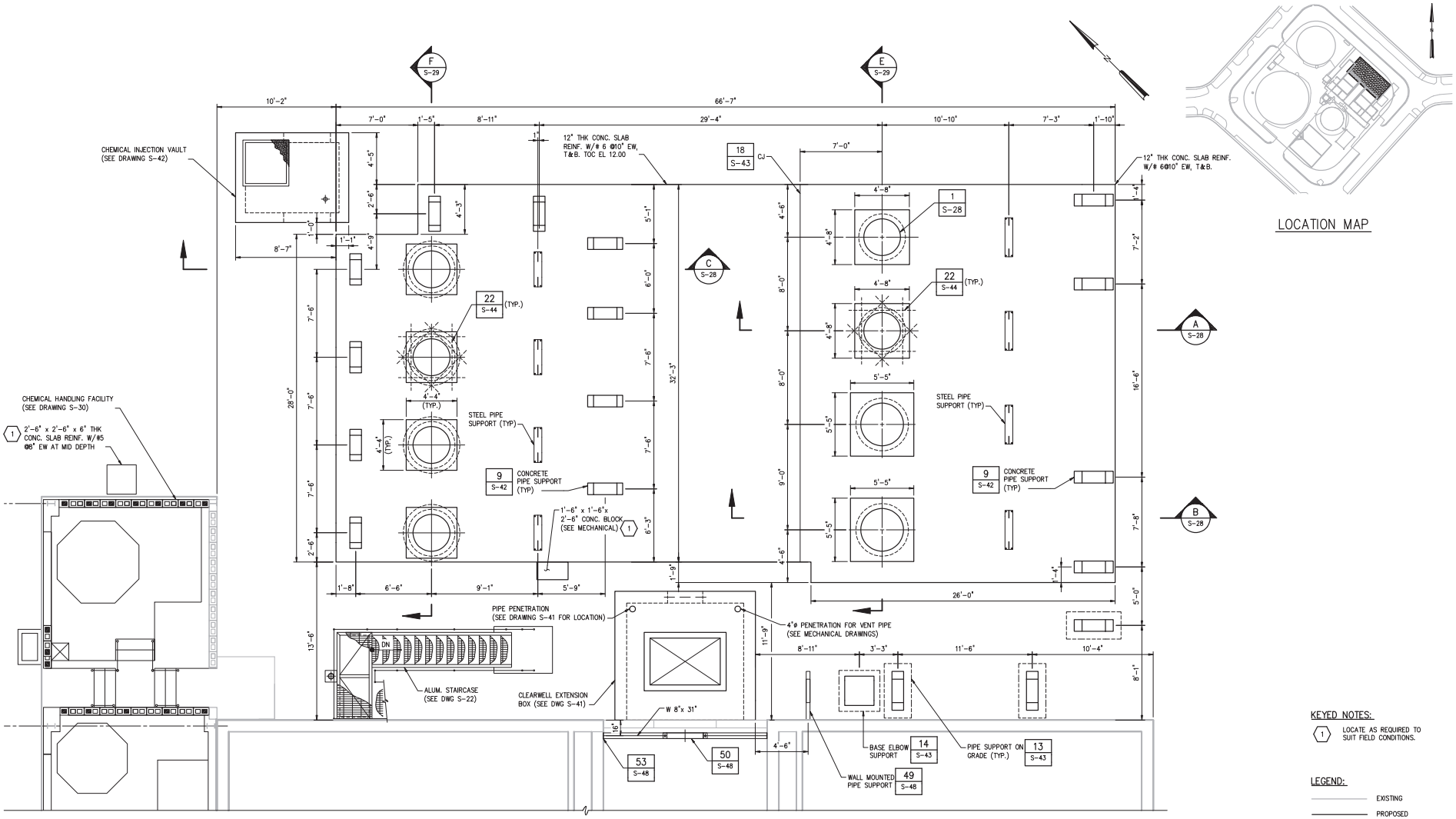


PROPOSED PLAN

1/4"=1'-0"

KEYED NOTES:

1. LOCATE AS REQUIRED TO SUIT FIELD CONDITIONS.

LEGEND:

EXISTING

PROPOSED

1/4"=1'-0"

| NO. | DATE | ISSUED FOR | BY |
|---|---|---|---|

DESIGNED J.P.S.
DRAWN F.C.T.
CHECKED A.F.H.
PROJ. ENGR. G.A.B.

JEAN PAUL SILVA P.E.
No. 66522

**HAZEN AND SAWYER**
Environmental Engineers & Scientists
4000 Hollywood Boulevard, Suite 750N
Hollywood, Florida 33021
Certificate of Authorization Number: 2771

SCALE 1/4"=1'-0"

CLIENTS PROJECT: –
ENGINEERS PROJECT: 44238-004
CAD REFERENCE: 44238-004BP3-S27

NORTH MIAMI FLORIDA
CITY OF NORTH MIAMI
PUBLIC WORKS UTILITIES

WINSON WATER TREATMENT PLANT
BID PACKAGE 3: WTP REHABILITATION
MASTER PUMP STATION
PROPOSED PLAN

DATE: JUNE 2014
SHEET: 167 OF 335
DRAWING: S-27

PERMITTING

PLOT DATE: 6/10/2014 5:14 p.m. BY: HSCALZ

XREFs= ..\Block\44238-004-BP3-TB,..\Base-BP3\S-BP3-HSPS-PLAN,..\,..\Drawings\Bid Package 3 - WTP Rehab\Base-BP3\S-BP1-Filters-Plan-Bottom-X,..\Base-BP3\S-BP3-ChemHand-Plan

File = H:\44238-004\Drawings\Bid Package 3 - WTP Rehab\Struct\44238-004BP3-S27 Saved by cofluentes Save date = 6/9/2014 7:07 p.m.

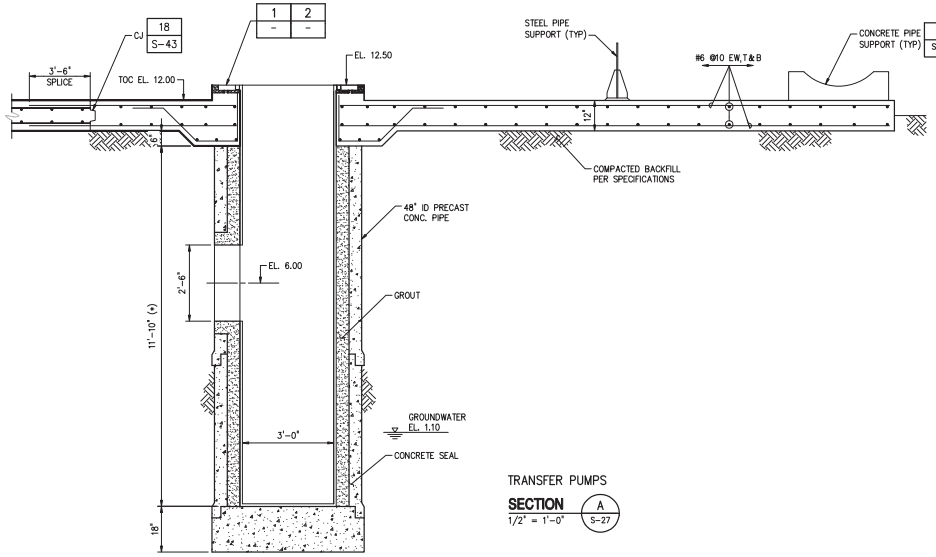


TRANSFER PUMPS

**SECTION** A S-27
1/2" = 1'-0"

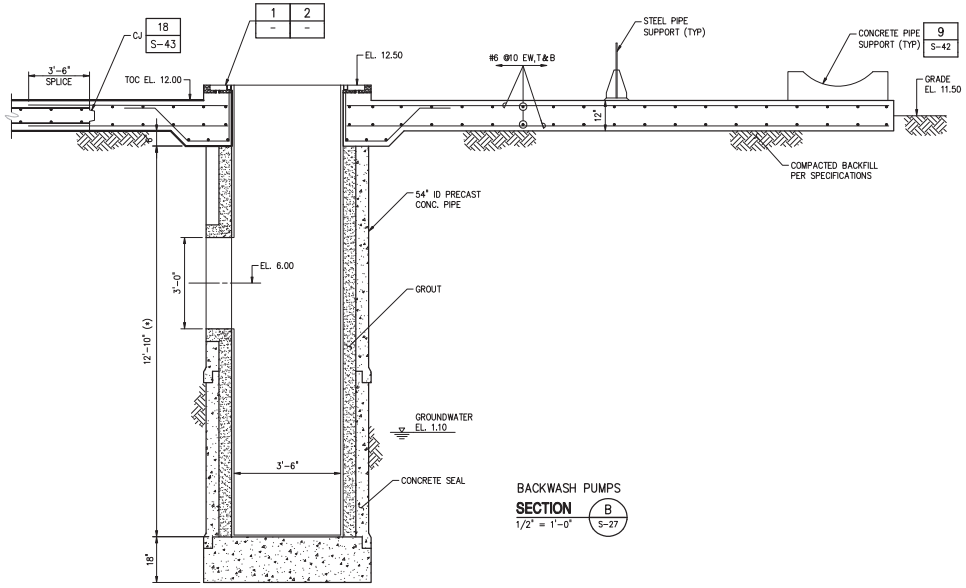


BACKWASH PUMPS

**SECTION** B S-27
1/2" = 1'-0"

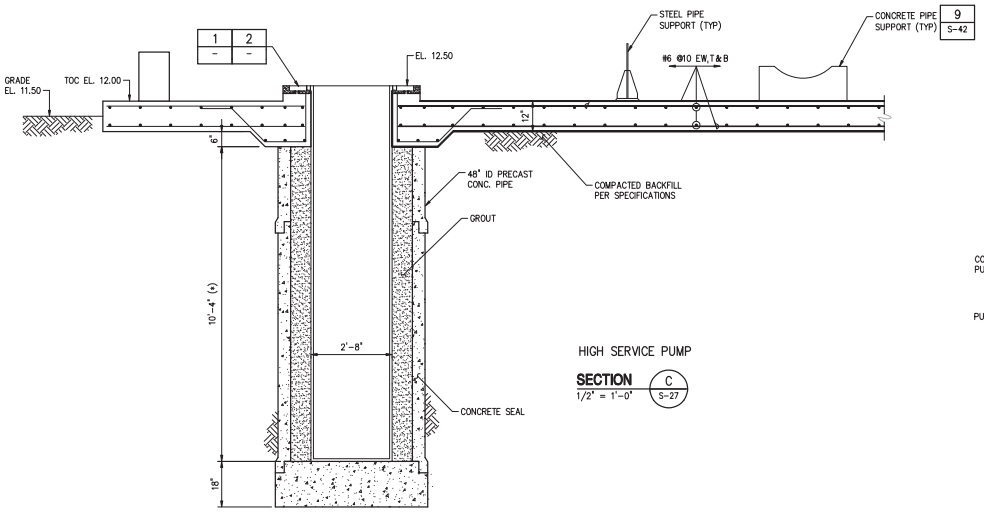


HIGH SERVICE PUMP

**SECTION** C S-27
1/2" = 1'-0"

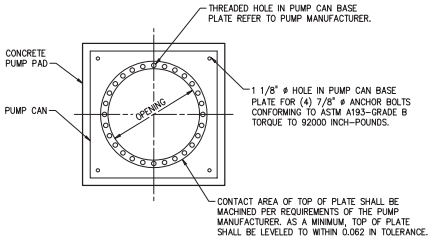


**DETAIL** 1 S-27
NTS

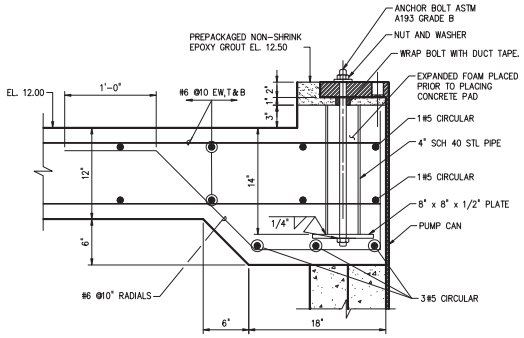


**DETAIL** 2 -
1 1/2" = 1'-0"

NOTE:

* MINIMUM DEPTH OF PUMP SHOWN ACTUAL PUMP AND CAN DIMENSION TO BE DETERMINED BY PUMP MANUFACTURER

1 1/2"=1'-0" 4" 0 1'

1/2"=1'-0" 12" 0 1 3'

| NO. | DATE | ISSUED FOR | BY |
|---|---|---|---|

DESIGNED J.P.S.
DRAWN C.C.P.
CHECKED A.F.H.
PROJ. ENGR. G.A.B.

JEAN PAUL SILVA P.E.
No. 66522

**HAZEN AND SAWYER**
Environmental Engineers & Scientists
4000 Hollywood Boulevard, Suite 750N
Hollywood, Florida 33021
Certificate of Authorization Number: 2771

SCALE: AS NOTED

CLIENTS PROJECT: –
ENGINEERS PROJECT: 44238-004
CAD REFERENCE: 44238-004BP3-S28

NORTH MIAMI FLORIDA — CITY OF NORTH MIAMI
PUBLIC WORKS UTILITIES

WINSON WATER TREATMENT PLANT
BID PACKAGE 3: WTP REHABILITATION

MASTER PUMP STATION
SECTIONS AND DETAILS

DATE: JUNE 2014
SHEET: 168 OF 335
DRAWING: S-28

PERMITTING

PLOT DATE: 6/10/2014 5:07 p.m. BY: HSCALZ

XREFs= ..\Tblock\44238-004-BP3-TB,..\Base-BP3\S-BP3-HSPS-SECT

File = H:\44238-004\Drawings\Bid Package 3 - WTP Rehab\Struct\44238-004BP3-S28 Saved by cofuentes Save date = 6/9/2014 6:06 p.m.

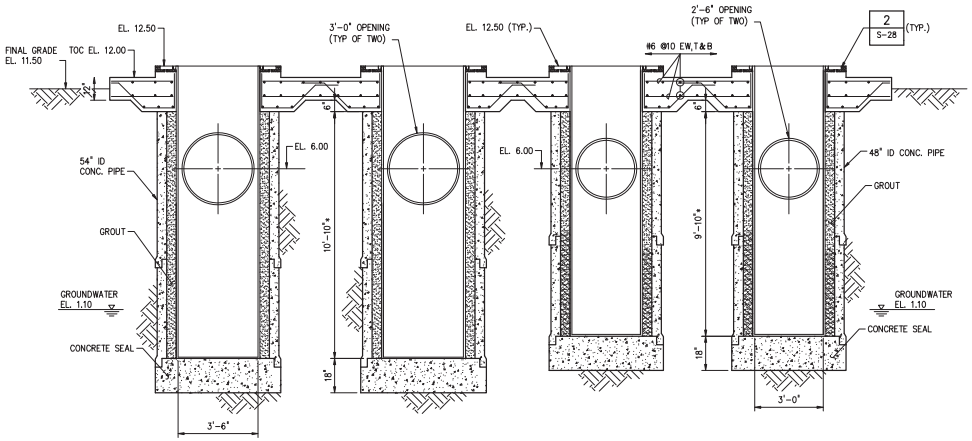


**SECTION** E / S-27
3/8" = 1'-0"

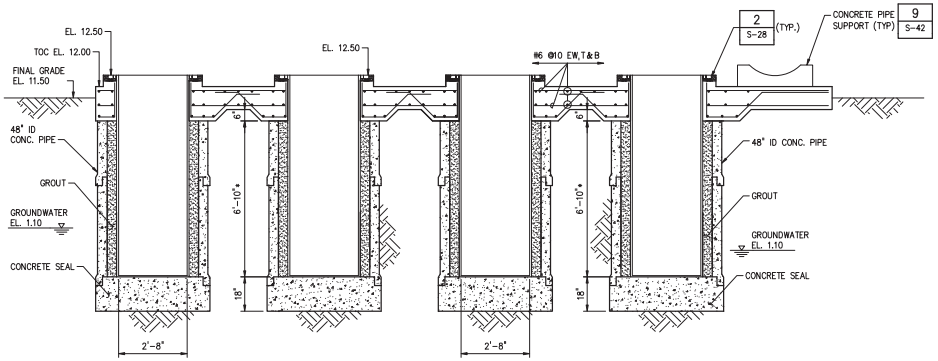


**SECTION** F / S-27
3/8" = 1'-0"

NOTE:

* MINIMUM DEPTH OF PUMP SHOWN ACTUAL PUMP AND CAN DIMENSION TO BE DETERMINED BY PUMP MANUFACTURER

3/8"=1'-0"

12" 0 1 2 4'

| NO. | DATE | ISSUED FOR | BY |
|---|---|---|---|

DESIGNED J.P.S.
DRAWN C.C.P.
CHECKED A.F.H.
PROJ. ENGR. G.A.B.

JEAN PAUL SILVA P.E.
No. 66522

HAZEN AND SAWYER
Environmental Engineers & Scientists
4000 Hollywood Boulevard, Suite 750N
Hollywood, Florida 33021
Certificate of Authorization Number: 2771

SCALE: AS NOTED

CLIENTS PROJECT: –
ENGINEERS PROJECT: 44238-004
CAD REFERENCE: 44238-004BP3-S29

NORTH MIAMI FLORIDA
CITY OF NORTH MIAMI
PUBLIC WORKS UTILITIES

WINSON WATER TREATMENT PLANT
BID PACKAGE 3: WTP REHABILITATION
MASTER PUMP STATION
SECTIONS

DATE: JUNE 2014
SHEET: 169 OF 335
DRAWING: S-29

PERMITTING

PLOT DATE: 6/10/2014 5:09 p.m. BY: HSCALZ

XREFs= ..\Tblock\44238-004-BP3-TB,..\Base-BP3\S-BP3-HSPS-SECT

File = H:\44238-004\Drawings\Bid Package 3 - WTP Rehab\Struct\44238-004BP3-S29 Saved by ccifuentes Save date = 6/9/2014 5:40 p.m.

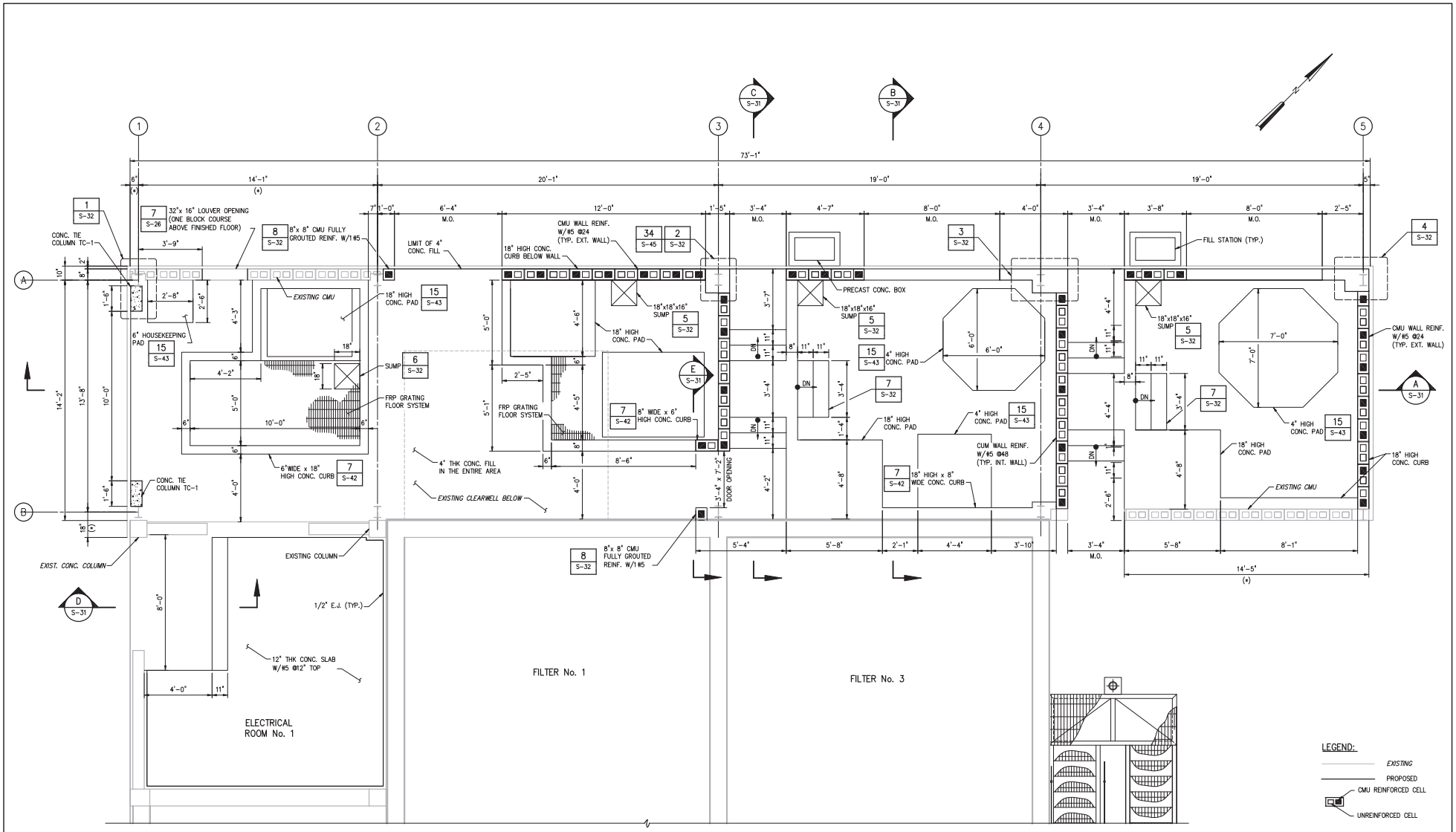


PLAN

3/8"=1'-0"

| NO. | DATE | ISSUED FOR | BY |
|---|---|---|---|

DESIGNED J.P.S.
DRAWN C.C.P.
CHECKED A.F.H.
PROJ. ENGR. G.A.B.

JEAN PAUL SILVA P.E.
No. 66522

**HAZEN AND SAWYER**
Environmental Engineers & Scientists
4000 Hollywood Boulevard, Suite 750N
Hollywood, Florida 33021
Certificate of Authorization Number: 2771

SCALE 3/8"=1'-0"

CLIENTS PROJECT: –
ENGINEERS PROJECT: 44238-004
CAD REFERENCE: 44238-004BP3-S30

NORTH MIAMI FLORIDA
CITY OF NORTH MIAMI
PUBLIC WORKS UTILITIES

WINSON WATER TREATMENT PLANT
BID PACKAGE 3: WTP REHABILITATION

CHEMICAL HANDLING FACILITY
PROPOSED PLAN

DATE: JUNE 2014
SHEET: 170 OF 335
DRAWING: S-30

PERMITTING

PLOT DATE: 6/10/2014 5:12 p.m. BY: HSCALZ

XREFs= ..\Tblock\44238-004-BP3-TB,..\Base-BP3\S-BP3-ChemHand-Plan

File = H:\44238-004\Drawings\Bid Package 3 - WTP Rehab\Struct\44238-004BP3-S30 Saved by ccifuentes Save date = 6/9/2014 5:11 p.m.

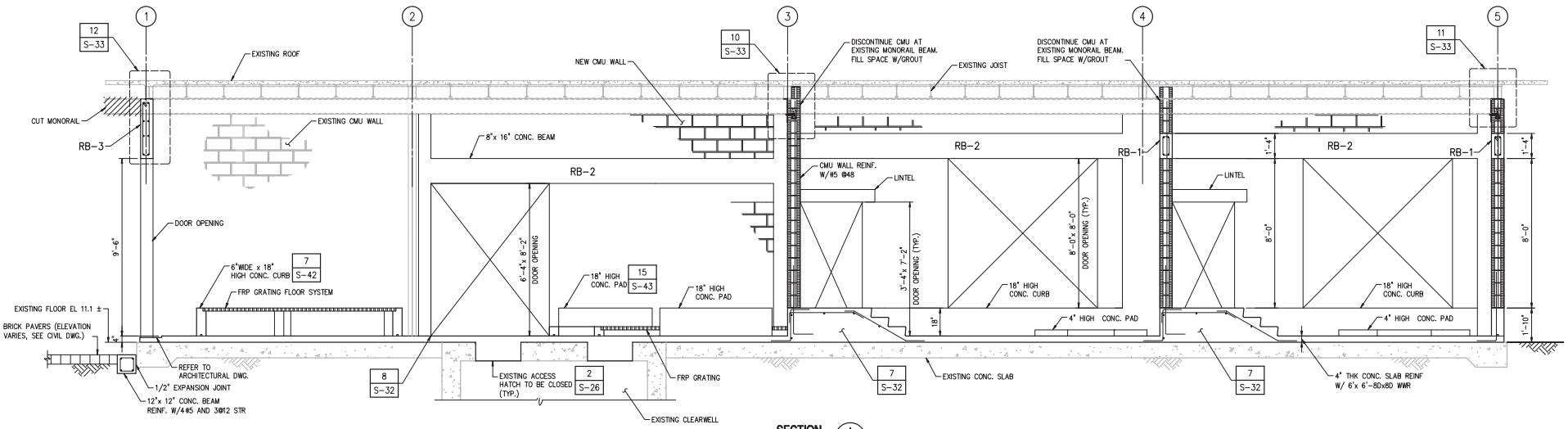


SECTION A
3/8" = 1'-0" S-30

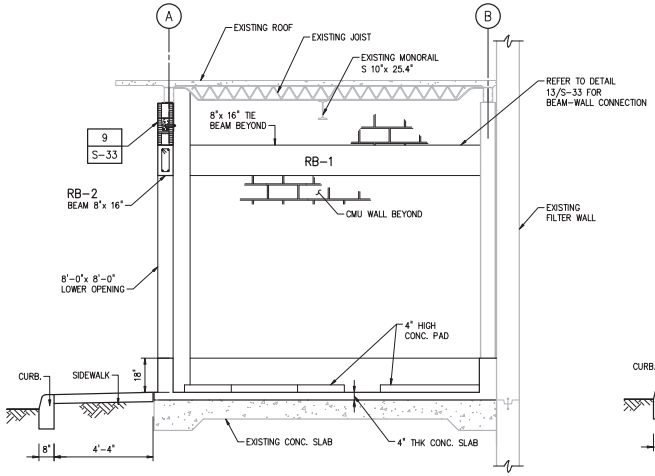


SECTION B
3/8" = 1'-0" S-30

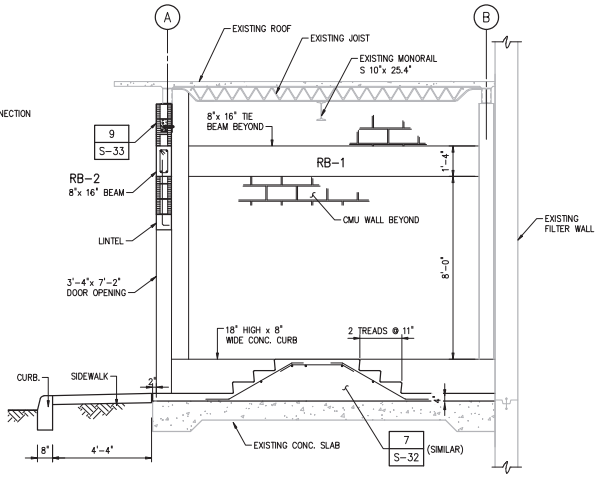


SECTION C
3/8" = 1'-0" S-30

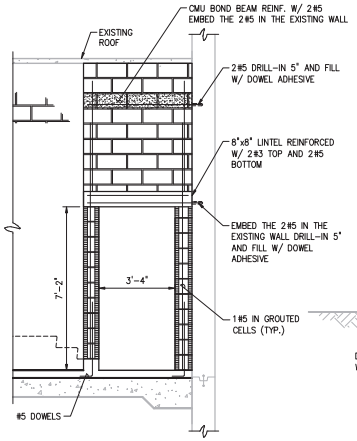


SECTION E
3/8" = 1'-0" S-30

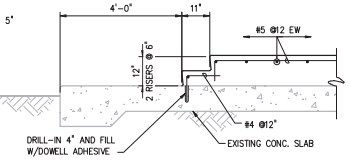


SECTION D
1/2" = 1'-0" S-30

1/2"=1'-0" 12" 0 1 3'

3/8"=1'-0" 12" 0 1 2 4'

| NO. | DATE | ISSUED FOR | BY |
|---|---|---|---|

DESIGNED J.P.S.
DRAWN C.C.P.
CHECKED A.F.H.
PROJ. ENGR. G.A.B.

JEAN PAUL SILVA P.E.
No. 66522

**HAZEN AND SAWYER**
Environmental Engineers & Scientists
4000 Hollywood Boulevard, Suite 750N
Hollywood, Florida 33021
Certificate of Authorization Number: 2771

SCALE: AS NOTED

CLIENTS PROJECT: –
ENGINEERS PROJECT: 44238-004
CAD REFERENCE: 44238-004BP3-S31

NORTH MIAMI FLORIDA
CITY OF NORTH MIAMI
PUBLIC WORKS UTILITIES

WINSON WATER TREATMENT PLANT
BID PACKAGE 3: WTP REHABILITATION

CHEMICAL HANDLING FACILITY
SECTIONS AND DETAILS SHEET 1

DATE: JUNE 2014
SHEET: 171 OF 335
DRAWING: S-31

PERMITTING

PLOT DATE: 6/10/2014 5:15 p.m. BY: HSCALZ

XREFs= ..\Tblock\44238-004-BP3-TB,..\Base-BP3\S-BP3-ChemHand-Sections

File = H:\44238-004\Drawings\Bid Package 3 - WTP Rehab\Struct\44238-004BP3-S31 Saved by HScalz Save date = 6/9/2014 5:47 p.m.

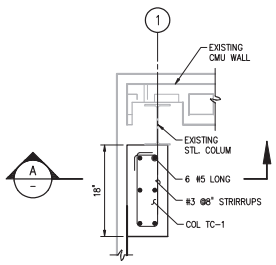


**DETAIL** 1 (S-30) 1" = 1'-0"

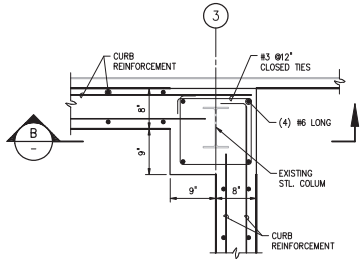


**DETAIL** 2 (S-30) 1" = 1'-0"

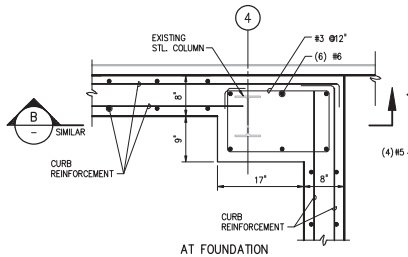


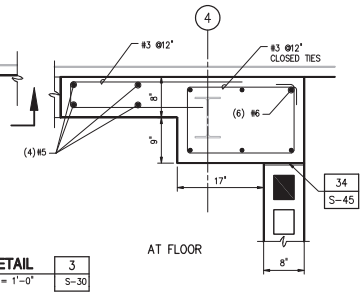


**DETAIL** 3 (S-30) 1" = 1'-0"

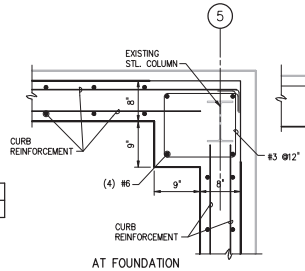


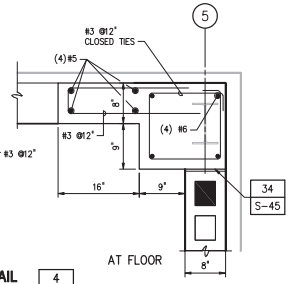


**DETAIL** 4 (S-30) 1" = 1'-0"

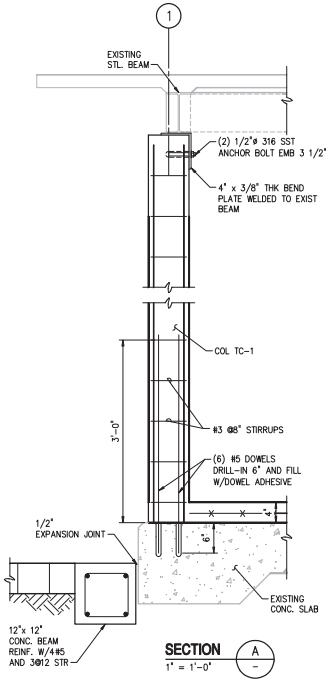


**SECTION** A (–) 1" = 1'-0"

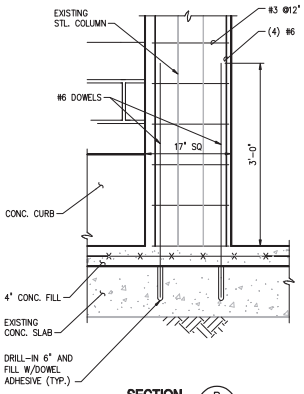


**SECTION** B (–) 1" = 1'-0"

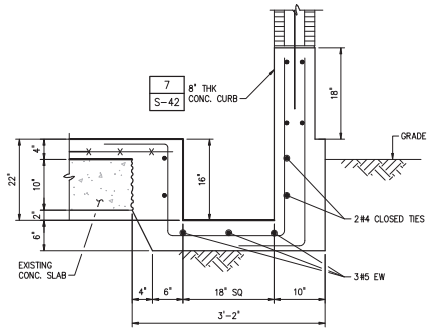


**DETAIL** 5 (S-30) 1" = 1'-0"

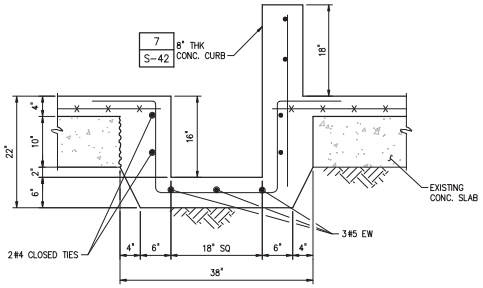


**DETAIL** 6 (S-30) 1" = 1'-0"

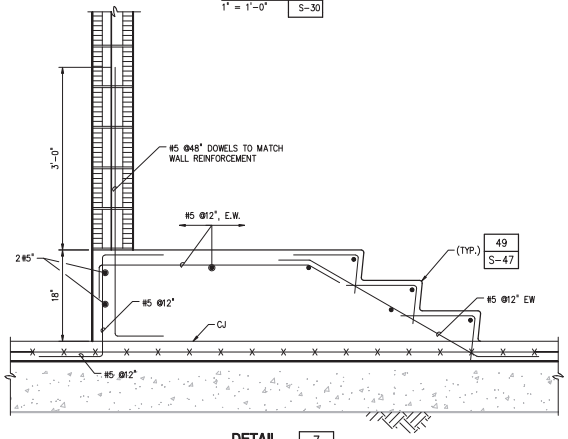


**DETAIL** 7 (S-30) 1" = 1'-0"

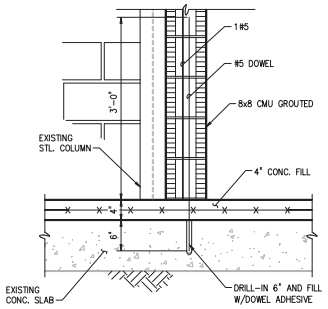


**DETAIL** 8 (S-30) 1" = 1'-0"

1"=1'-0" 12" 6 0 1'

| NO. | DATE | ISSUED FOR | BY |
|---|---|---|---|

DESIGNED J.P.S.
DRAWN C.C.P.
CHECKED A.F.H.
PROJ. ENGR. G.A.B.

JEAN PAUL SILVA P.E.
No. 66522

**HAZEN AND SAWYER**
Environmental Engineers & Scientists
4000 Hollywood Boulevard, Suite 750N
Hollywood, Florida 33021
Certificate of Authorization Number: 2771

SCALE: AS NOTED

CLIENTS PROJECT: –
ENGINEERS PROJECT: 44238-004
CAD REFERENCE: 44238-004BP3-S32

NORTH MIAMI FLORIDA — CITY OF NORTH MIAMI
PUBLIC WORKS UTILITIES

WINSON WATER TREATMENT PLANT
BID PACKAGE 3: WTP REHABILITATION

CHEMICAL HANDLING FACILITY
SECTIONS AND DETAILS SHEET 2

DATE: JUNE 2014
SHEET: 172 OF 335
DRAWING: S-32

PERMITTING

PLOT DATE: 6/10/2014 5:17 p.m. BY: HSCALZ
XREFs= ..\block\44238-004-BP3-TB
File = H:\44238-004\Drawings\Bid Package 3 - WTP Rehab\Struct\44238-004BP3-S32 Saved by cofuentes Save date = 6/9/2014 6:04 p.m.

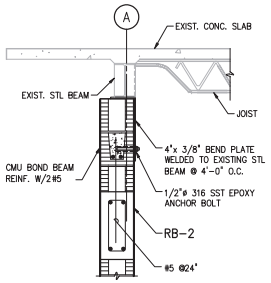


**DETAIL** 9 / S-31
NTS

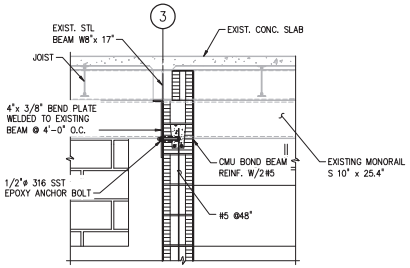


**DETAIL** 10 / S-31
NTS

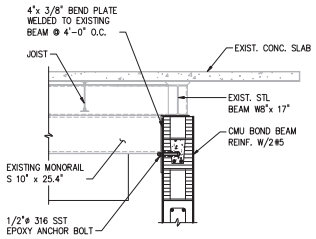


**DETAIL** 11 / S-31
NTS

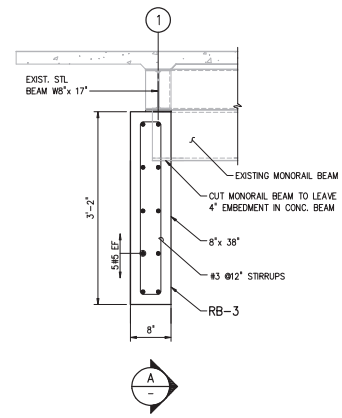


**DETAIL** 12 / S-31
NTS

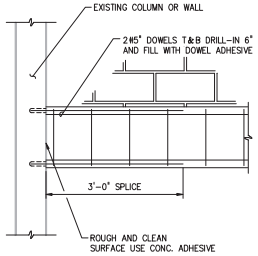


**DETAIL** 13 / S-31
NTS

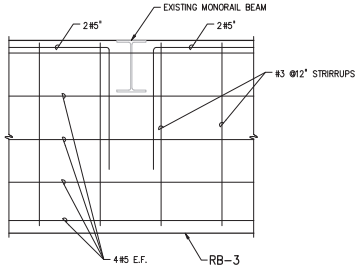


**SECTION** A / -
NTS

| BEAM SCHEDULE | | | | | | | | | |
|---|---|---|---|---|---|---|---|---|---|
| MARK | SPAN TYPE | SIZE | | No. REQ'S | MAIN REINF. | | STIRRUPS | | REMARKS |
| | | W" | D" | | TOP | BOT. | SIZE | SPACING | |
| RB-1 | SIMPLE | 8" | 16" | 2 | 2#5 | 2#5 | #3 | @12 | – |
| RB-2 | SIMPLE | 8" | 16" | 3 | 2#5 | 2#5 | #3 | @12 | – |
| RB-3 | SIMPLE | 8" | 16" | 1 | 2#5 | 2#5 | #3 | @12 | SEE DETAIL 12/S-33<br>SEE DETAIL A/S-33 |

SEE DETAIL 28/S-45 FOR BEAMS ELEVATIONS

PLOT DATE: 6/10/2014 5:20 p.m. BY: HSCAU2

| NO. | DATE | ISSUED FOR | BY |
|---|---|---|---|

DESIGNED J.P.S.
DRAWN C.C.P.
CHECKED A.F.H.
PROJ. ENGR. G.A.B.

JEAN PAUL SILVA P.E.
No. 66522

HAZEN AND SAWYER
Environmental Engineers & Scientists
4000 Hollywood Boulevard, Suite 750N
Hollywood, Florida 33021
Certificate of Authorization Number: 2771

SCALE AS NOTED

CLIENTS PROJECT: –
ENGINEERS PROJECT: 44238-004
CAD REFERENCE: 44238-004BP3-S33

NORTH MIAMI FLORIDA
CITY OF NORTH MIAMI
PUBLIC WORKS UTILITIES

WINSON WATER TREATMENT PLANT
BID PACKAGE 3: WTP REHABILITATION
CHEMICAL HANDLING FACILITY
SECTIONS AND DETAILS SHEET 3

DATE: JUNE 2014
SHEET: 173 OF 335
DRAWING: S-33

PERMITTING

XREFs= ..\Tblock\44238-004-BP3-TB,..\Base-BP3\S-BP3-ChemHand-Sections

File = H:\44238-004\Drawings\Bid Package 3 - WTP Rehab\Struct\44238-004BP3-S33 Saved by ccifuentes Save date = 6/9/2014 7:16 p.m.

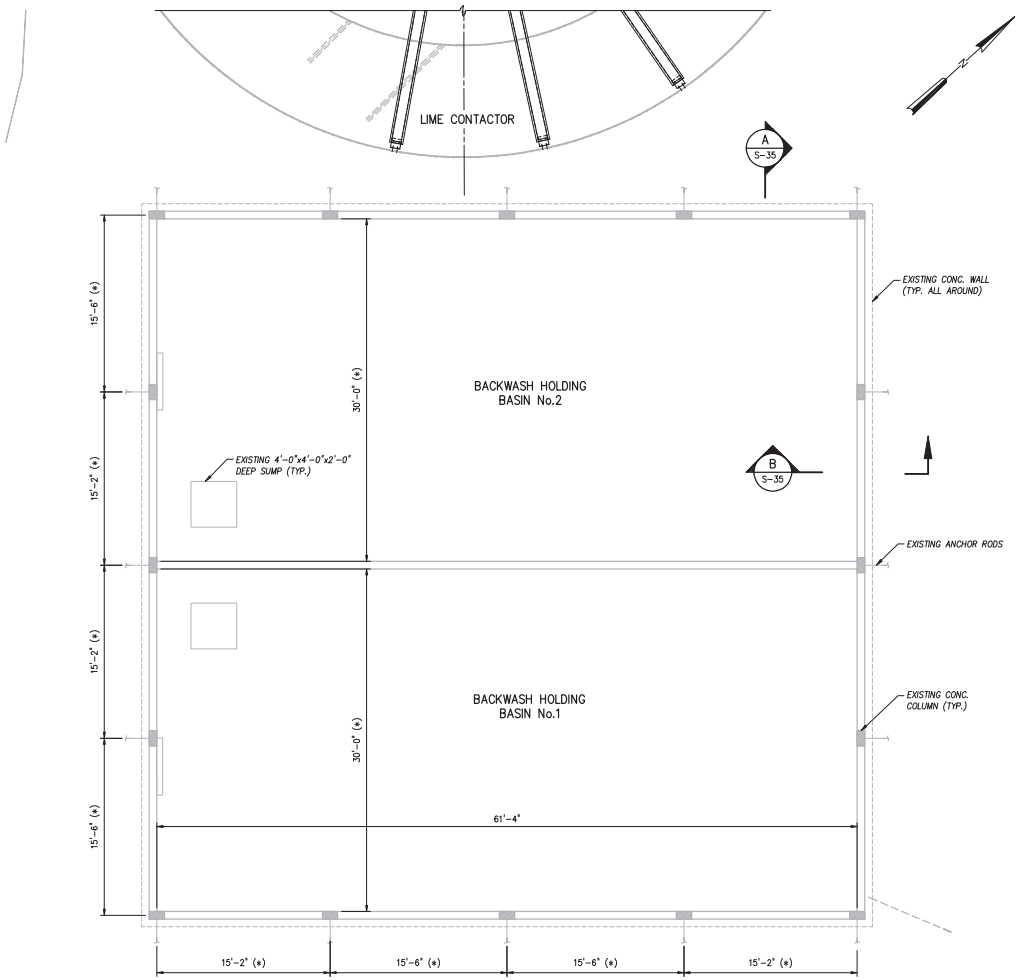


BACKWASH HOLDING BASIN PLAN
3/16" = 1'-0"

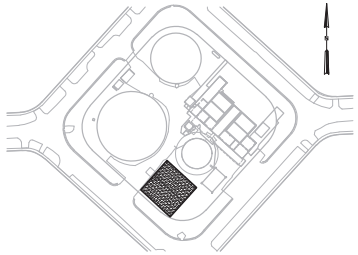

LOCATION MAP

GENERAL NOTES:

1. REFURBISH THE INTERIOR OF THE BASINS PER SPECIFICATION 07161.
2. FOR CONSTRUCTION SEQUENCING RESTRICTIONS FOR THE WORK SHOWN ON THIS SHEET REFERENCE THE SPECIFICATION ENTITLED "SUMMARY OF WORK".

LEGEND:

EXISTING

PROPOSED

3/16"=1'-0" 6 4 2 0 5'

| NO. | DATE | ISSUED FOR | BY |
|---|---|---|---|

DESIGNED J.P.S.
DRAWN C.C.P.
CHECKED A.F.H.
PROJ. ENGR. G.A.B.

JEAN PAUL SILVA P.E.
No. 66522

HAZEN AND SAWYER
Environmental Engineers & Scientists
4000 Hollywood Boulevard, Suite 750N
Hollywood, Florida 33021
Certificate of Authorization Number: 2771

SCALE 3/16" = 1'-0"

CLIENTS PROJECT: –
ENGINEERS PROJECT: 44238-004
CAD REFERENCE: 44238-004BP3-S34

NORTH MIAMI FLORIDA
CITY OF NORTH MIAMI
PUBLIC WORKS UTILITIES

WINSON WATER TREATMENT PLANT
BID PACKAGE 3: WTP REHABILITATION
BACKWASH HOLDING BASIN
DEMOLITION PLAN

DATE: JUNE 2014
SHEET: 174 OF 335
DRAWING: S-34

PERMITTING

PLOT DATE: 6/10/2014 5:23 p.m. BY: HSCHULZ

XREFs= ..\Tblock\44238-004-BP3-TB,..\Base-BP3\C-Site-Survey-X,..\Base-BP3\S-BP3-BackwashBasin-Plan-X,..\Base-BP3\S-BP3-LimeContactor-Plan

File = H:\44238-004\Drawings\Bid Package 3 - WTP Rehab\Struct\44238-004BP3-S34 Saved by ccifuentes Save date = 6/9/2014 5:19 p.m.

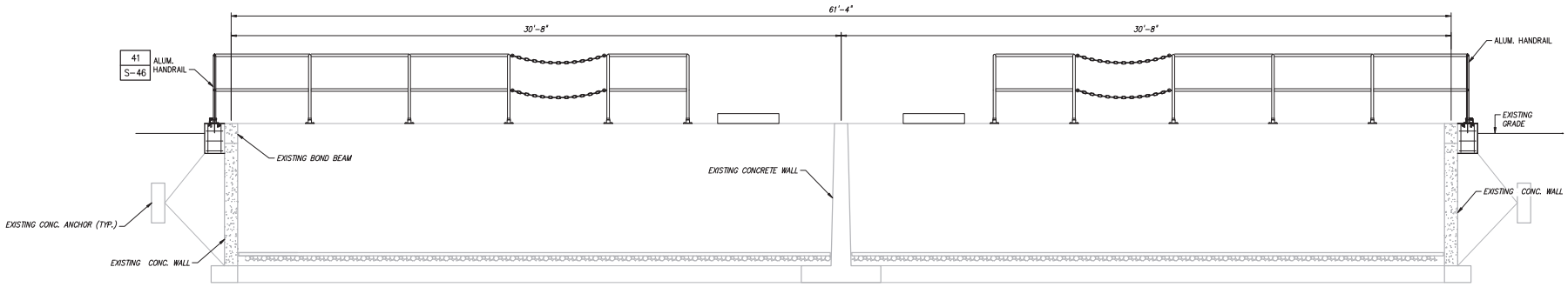


SECTION A S-34
3/8" = 1'-0"

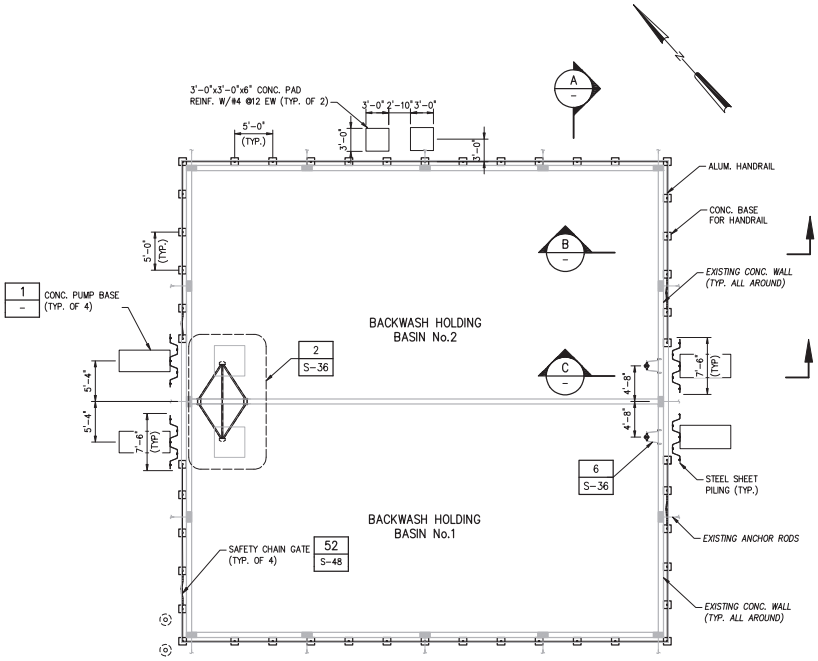


BACKWASH PLAN
1/8" = 1'-0"

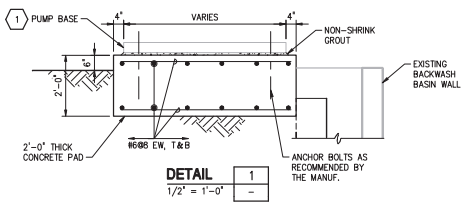


DETAIL 1
1/2" = 1'-0"

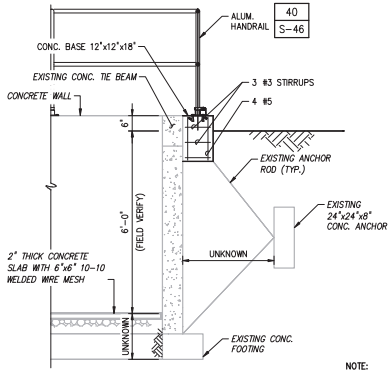


SECTION B S-34
1/2" = 1'-0"

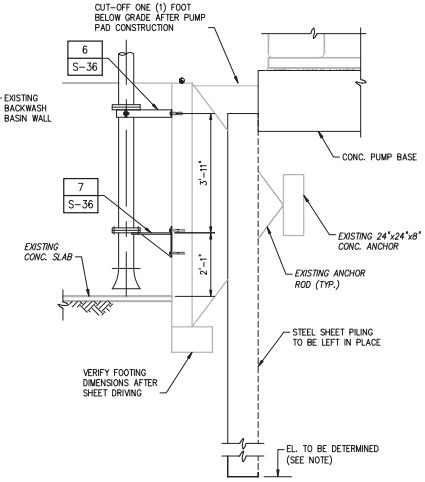


SECTION C
1/2" = 1'-0"

NOTE:

INTERLOCKED PZ-27 STEEL SHEETING TO BE DRIVEN BEFORE EXCAVATION. THE CONTRACTOR SHALL SUBMIT TO THE ENGINEER FOR REVIEW SIGNED AND SEALED DESIGN CALCULATIONS SHADOWING SHEETING LAYOUT, SIZES, DEPTHS, BRACING, AS WELL AS DEFLECTION VALUES AT THE TOP OF THE SHEETING. SUBMITTAL SHALL ALSO INCLUDE THE PROPOSED SHEETING DRIVING METHODS, DRIVING EQUIPMENT AND VIBRATIONS LEVELS RESULTING FROM THE DRIVING OPERATION.

KEYED NOTES:

1. LEVEL PUMP BASE AND FILL BASE CAVITY WITH GROUT PER MANUFACTURER DIRECTIONS.

LEGEND:

EXISTING

PROPOSED

1/8"=1'-0" 8 6 4 2 0 8'

1/2"=1'-0" 12" 0 1 3'

3/8"=1'-0" 12" 0 1 2 4'

| NO. | DATE | ISSUED FOR | BY |
|---|---|---|---|

DESIGNED J.P.S.
DRAWN C.C.P.
CHECKED A.F.H.
PROJ. ENGR. G.A.B.

JEAN PAUL SILVA P.E.
No. 66522

HAZEN AND SAWYER
Environmental Engineers & Scientists
4000 Hollywood Boulevard, Suite 750N
Hollywood, Florida 33021
Certificate of Authorization Number: 2771

SCALE: AS NOTED

CLIENTS PROJECT: –
ENGINEERS PROJECT: 44238-004
CAD REFERENCE: 44238-004BP3-S35

NORTH MIAMI FLORIDA
CITY OF NORTH MIAMI
PUBLIC WORKS UTILITIES

WINSON WATER TREATMENT PLANT
BID PACKAGE 3: WTP REHABILITATION
BACKWASH HOLDING BASIN
REHABILITATION PLANS AND DETAILS

DATE: JUNE 2014
SHEET: 175 OF 335
DRAWING: S-35

PERMITTING

PLOT DATE: 6/10/2014 5:25 p.m. BY: HSCALZ

XREFs= ..\Thlock\44238-004-BP3-TB,..\Base-BP3\S-BP3-BackwashBasin-Sections-X,..\Base-BP3\C-Site-YardPiping-Prop,..\Base-BP3\M-BP3-BackwashBasin-Plan,..\base-bp3\M-BP3-HypoChlorite-Plan,..\Base-BP3\S-BP3-BackwashBasin-Plan,..\Base-BP3\S-BP3-BackwashBasin-Plan-X

File = H:\44238-004\Drawings\Bid Package 3 - WTP Rehab\Struct\44238-004BP3-S35 Saved by cofuentes Save date = 6/9/2014 6:05 p.m.

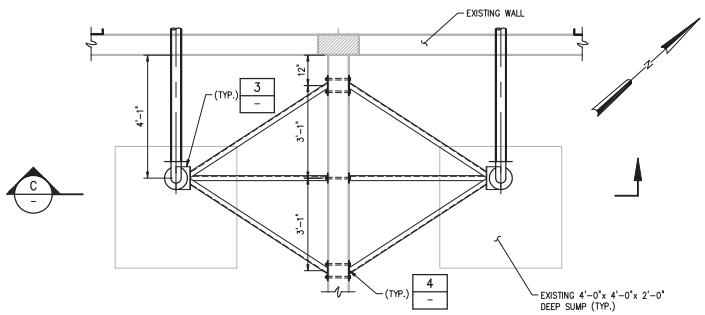


**DETAIL** 2 (1/2" = 1'-0", S-35)

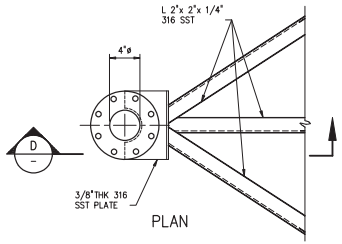


PLAN

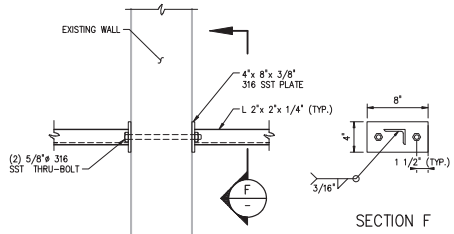


SECTION F

**DETAIL** 4 (1 1/2" = 1'-0", S-35)

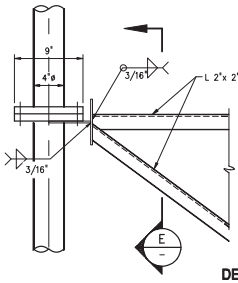


SECTION D

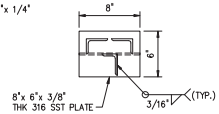


SECTION E

**DETAIL** 3 (1 1/2" = 1'-0", S-35)

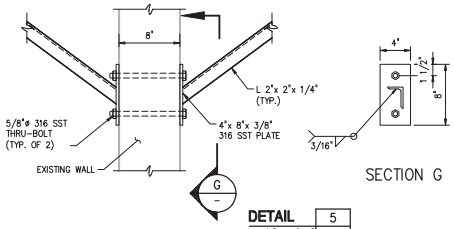


SECTION G

**DETAIL** 5 (1 1/2" = 1'-0", S-35)

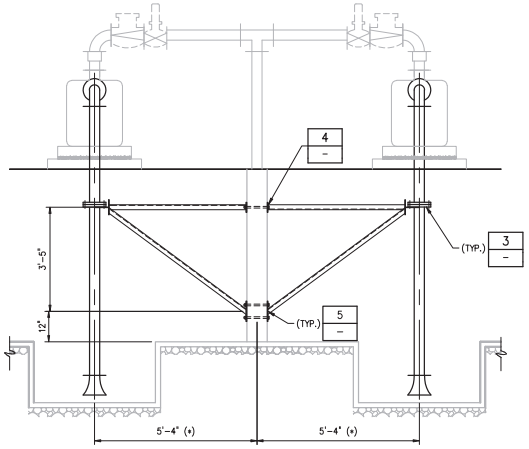


**SECTION** C (1/2" = 1'-0")

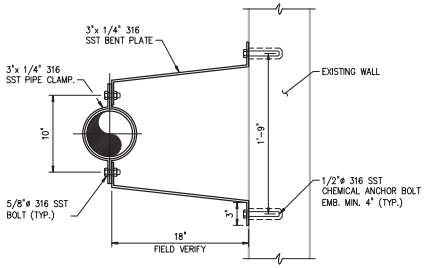


**DETAIL** 6 (1 1/2" = 1'-0", S-35)

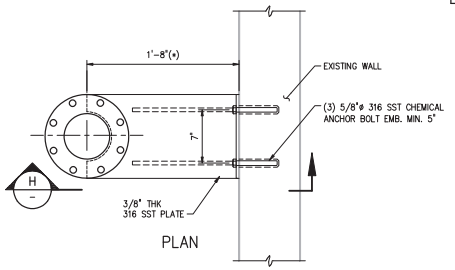


PLAN

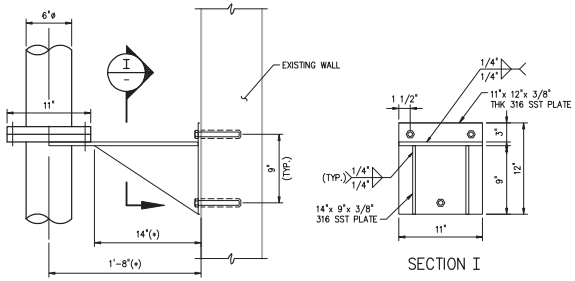


SECTION H

SECTION I

**DETAIL** 7 (1 1/2" = 1'-0", S-35)

1/2"=1'-0" 12" 0 1 3'

1 1/2"=1'-0" 4" 0 1'

| NO. | DATE | ISSUED FOR | BY |
|---|---|---|---|

DESIGNED J.P.S.
DRAWN C.C.P.
CHECKED A.F.H.
PROJ. ENGR. G.A.B.

JEAN PAUL SILVA P.E.
No. 66522

**HAZEN AND SAWYER**
Environmental Engineers & Scientists
4000 Hollywood Boulevard, Suite 750N
Hollywood, Florida 33021
Certificate of Authorization Number: 2771

SCALE: AS NOTED

CLIENTS PROJECT: –
ENGINEERS PROJECT: 44238-004
CAD REFERENCE: 44238-004BP3-S36

NORTH MIAMI FLORIDA — CITY OF NORTH MIAMI
PUBLIC WORKS UTILITIES

WINSON WATER TREATMENT PLANT
BID PACKAGE 3: WTP REHABILITATION

BACKWASH HOLDING BASIN REHABILITATION DETAILS

DATE: JUNE 2014
SHEET: 176 OF 335
DRAWING: S-36

PERMITTING

PLOT DATE: 6/10/2014 5:27 p.m. BY: HSCALZ

XREFs= ..\Tblock\44238-004-BP3-TB,..\Base-BP3\S-BP3-BackwashBasin-Plan-X,..\Base-BP3\S-BP3-BackwashBasin-Plan,..\Base-BP3\C-Site-YardPiping-Prop,..\Base-BP3\M-BP3-BackwashBasin-Plan,..\base-bp3\M-BP3-Hypochlorite-Plan

File = H:\44238-004\Drawings\Bid Package 3 - WTP Rehab\Struct\44238-004BP3-S36 Saved by ccifuentes Save date = 6/9/2014 8:00 p.m.

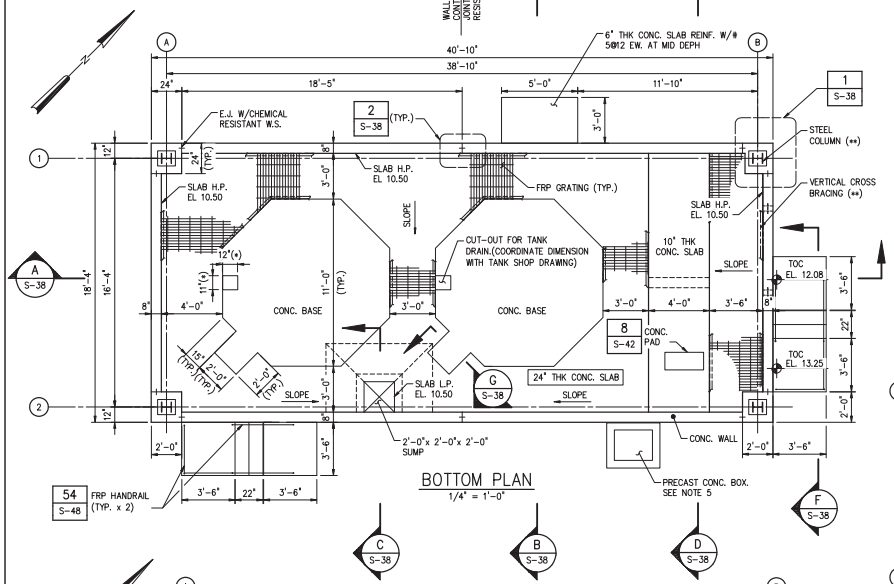


BOTTOM PLAN
1/4" = 1'-0"

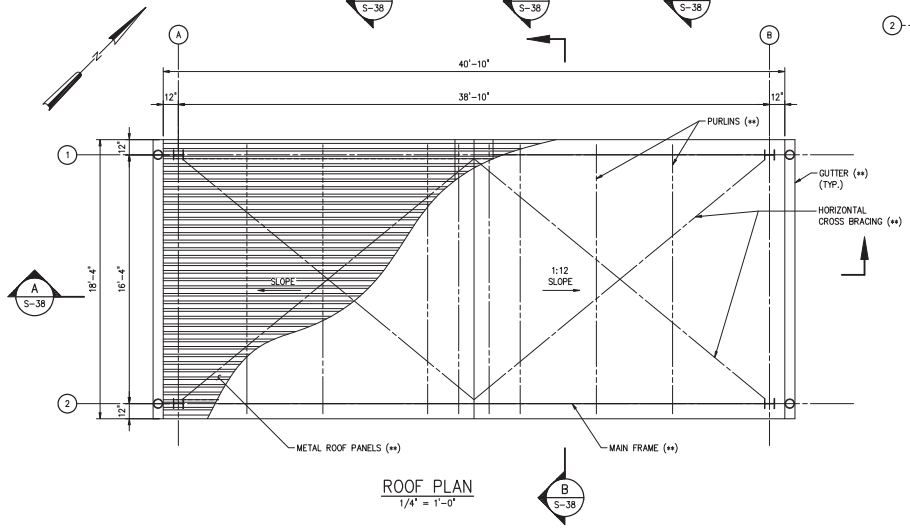


ROOF PLAN
1/4" = 1'-0"

NOTES:

1. THE SODIUM HYPOCHLORITE FACILITY SHALL BE A PRE-ENGINEERED METAL BUILDING SYSTEM PER SPECIFICATION SECTION 13121. PRE-ENGINEERED METAL BUILDING SYSTEM DESIGN CALCULATIONS AND DETAILED DRAWINGS SHALL BE SIGNED AND SEALED BY A PROFESSIONAL ENGINEER REGISTERED IN THE STATE OF FLORIDA.
2. THE PRE-ENGINEERED METAL BUILDING FOUNDATION SHALL BE AS SHOWN ON THE CONTRACT DOCUMENTS. THE CONTRACTOR SHALL COORDINATE ANCHOR BOLT REQUIREMENTS WITH METAL BUILDING MANUFACTURER AND THE ENGINEER. THE ENGINEER SHALL VERIFY THE FOUNDATION CAPACITY FOR THE REACTIONS PROVIDED BY THE PRE-ENGINEERED METAL BUILDING MANUFACTURER. FOUNDATION DIMENSIONS SHOWN ARE FOR BIDDING PURPOSES AND MAY VARY DEPENDING ON MANUFACTURER SELECTED. FINAL DIMENSIONS SHALL BE VERIFIED AFTER PRE-ENGINEERED METAL BUILDING MANUFACTURER'S FINAL DESIGN HAS BEEN APPROVED.
3. PRE-ENGINEERED METAL BUILDING SYSTEM SHALL BE DESIGNED PER THE FLORIDA BUILDING CODE AND LIVE LOADS SHOWN ON DRAWING S-01.
4. ITEMS DESIGNATED WITH (**) SHALL BE PROVIDED BY THE PRE-ENGINEERED METAL BUILDING MANUFACTURER.
5. 6-INCH MINIMUM THICKNESS PRECAST CONCRETE BOX. REFER TO MECHANICAL DRAWINGS FOR DETAILS.

## CHEMICAL STORAGE

| | |
|---|---|
| CHEMICAL NAME | 12.5% SODIUM HYPOCHLORITE |
| FORMULA | NaOCL |
| CAS # | 7681-52-9 |
| NUMBER OF TANKS | 2 |
| STORAGE PER TANK | 8,222 GALLONS |
| TOTAL STORAGE | 16,444 GALLONS |
| CONTAINMENT VOLUME | 9,591 GALLONS |
| TANK DIAMETER | 10'-0" |
| TANK HEIGTH | 15'-8" |
| HEALTH | 2 MODERATE |
| FLAMMABILITY | 0 NON-FLAMMABLE |
| STABILITY/REACTIVITY | 1 SLIGHT |
| CONTACT | CORROSIVE |
| HAZARDOUS CLASSIFICATION | H-4 |

## LIFE SAFETY ANALYSIS

APPLICABLE CODES:
FLORIDA BUILDING CODE, BUILDING 2010 EDITION
FLORIDA BUILDING CODE, MECHANICAL 2010 EDITION
FLORIDA BUILDING CODE, FUEL GAS 2010 EDITION
FLORIDA BUILDING CODE, PLUMBING 2010 EDITION
FLORIDA FIRE PREVENTION CODE 2010 EDITION

OCCUPANCY CLASSIFICATION:
GROUP H-4, STORAGE (PER FBC 307.6)
LOW HAZARD CONTENTS (PER FFPC 6.2.2.2)
SPECIAL PURPOSE INDUSTRIAL OCCUPANCY (PER FFPC 40.1.4.1.2)

CONSTRUCTION TYPE:
TYPE II-B (PER FBC 602.2)
MAXIMUM NUMBER OF STORIES = 3 (PER FBC TABLE 503)
ACTUAL NUMBER OF STORIES = 1
MAXIMUM AREA (PER FLOOR) = 17,500 SF (PER FBC TABLE 503)
ACTUAL AREA = 749 SF SF < 17,500 SF
MAXIMUM BUILDING HEIGHT = 55' (PER FBC TABLE 503)
ACTUAL BUILDING HEIGHT = 26' < 55'

OUTDOOR STORAGE:
SEPARATION DISTANCE 20'-0" OR GREATER FFPC 64.2.2

OCCUPANT LOAD:
TOTAL OCCUPANT LOAD = 2
MAX. ALLOWABLE OCCUPANT LOAD (FBC TABLE 1004.1.1) = 300 SF PER OCCUPANT
FLOOR LEVEL 749 SF / 300 SF = 3 OCCUPANTS

EGRESS CAPACITY:
EGRESS CAPACITY EXCEEDS OCCUPANT LOAD. 0.2 INCHES PER OCCUPANT AT DOORS (FBC TABLE 1005.1) 0.3 INCHES PER OCCUPANT AT STAIRS (FBC TABLE 1005.1)

MINIMUM CORRIDOR WIDTH = 36" (FBC 1017.2, EXCEPTION 2) T
MINIMUM STAIR WIDTH = 36" (FBC 1009.1 EXCEPTION 1)
MINIMUM CLEAR OPENING OF EXIT DOORS = 32" (FBC 1008.1.1)

EXIT ACCESS TRAVEL DISTANCE:
TRAVEL DISTANCE TO EXIT = 175 FT. (PER FBC TABLE 1016.1)
TRAVEL DISTANCE TO EXIT = 300 FT. (PER FFPC TABLE 40.2.6)

EXIT ACCESS COMMON PATH OF TRAVEL:
COMMON PATH OF EGRESS TRAVEL = 75 FT. (PER FBC 1014.3)
COMMON PATH OF EGRESS TRAVEL = 50 FT. (PER FFPC TABLE 40.2.5)

EXIT ACCESS SPACES WITH ONE MEANS OF EGRESS:
SPACE MAXIMUM OCCUPANT LOAD = 10 PERSONS (PER FBC TABLE 1015.1)

FIRE PROTECTION REQUIREMENTS:
(PER FBC 2010, TABLE 601 AND TABLE 602)
STRUCTURAL FRAME "0" HRS"
BEARING WALLS (EXT) "0" HRS"
(INT) "0" HRS"
NON-BEARING WALLS (EXT) "0" HRS" (FIRE SEPARATION DISTANCE > 20' PER TABLE 802)
NON-BEARING WALLS (INT) "0" HRS"
FLOOR CONSTRUCTION "0" HRS"
ROOF CONSTRUCTION "0" HRS"

FIRE EXTINGUISHER REQUIREMENTS:
HAZARD CLASSIFICATION = LOW HAZARD PER NFPA 10-5.4.1.1
OCCUPANCY HAZARD CLASSIFICATION = CLASS A,B PER NFPA 10-5.2.3
FIRE EXTINGUISHER = 20LB/20A-120BC - DRY CHEMICAL

DESIGN CRITERIA:
CLASS A FIRE:
MAXIMUM TRAVEL DISTANCE = 75'
MAXIMUM FLOOR AREA = 11250 SF
NUMBER OF EXTINGUISHERS REQUIRED = GROUND FLOOR = 577 SF / 11250 SF = 0.05

CLASS B FIRE:
MAXIMUM TRAVEL DISTANCE = 50'

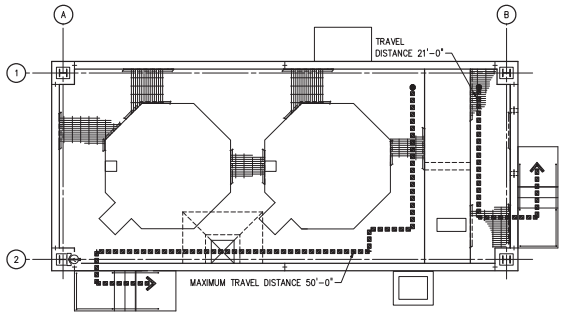


LIFE SAFETY PLAN
3/16" = 1'-0"

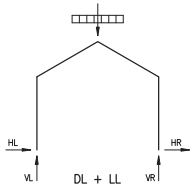


DL + LL

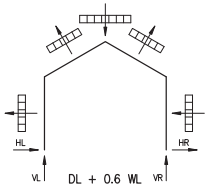


DL + 0.6 WL

| DL + 0.6 WL (KIPS) | | | | |
|---|---|---|---|---|
| GRIDLINE | VL | HL | VR | HR |
| 1 | 2.66 | 0.36 | 2.66 | -0.36 |
| 2 | 2.66 | 0.36 | 2.66 | -0.36 |

| DL + LL (KIPS) | | | | |
|---|---|---|---|---|
| GRIDLINE | VL | HL | VR | HR |
| 1 | 8.03 | 1.13 | 8.03 | -1.03 |
| 2 | 8.03 | 1.13 | 8.03 | -1.03 |

## LIFE SAFETY LEGEND

| | | | | | |
|---|---|---|---|---|---|
| ▲ | ENTRANCE/EXIT | | EMERGENCY LIGHT FIXTURE | | EXIT SIGN |
| | DIRECTION OF TRAVEL | | 1-HOUR FIRE RATED CMU WALL | | EXIT SIGN WALLMOUNT |
| ● | DEAD END CORRIDOR | | NON-FIRE RATED CMU WALL | F | FIRE ALARM PULL STATION WALL MOUNTED 48" A.F.F |
| | FIRE EXTINGUISHER | F | FIRE AUDIBLE & VISUAL ALARM | | |

1/4"=1'-0" 1 0 1 2 3 7'

| NO. | DATE | ISSUED FOR | BY |
|---|---|---|---|

DESIGNED J.P.S.
DRAWN A.B.C.
CHECKED A.F.H.
PROJ. ENGR. G.A.B.

JEAN PAUL SILVA P.E.
No. 66522

HAZEN AND SAWYER
Environmental Engineers & Scientists
4000 Hollywood Boulevard, Suite 750N
Hollywood, Florida 33021
Certificate of Authorization Number: 2771

SCALE 1/4"=1'-0"

CLIENTS PROJECT: -
ENGINEERS PROJECT: 44238-004
CAD REFERENCE: 44238-004BP3-S37

NORTH MIAMI FLORIDA
CITY OF NORTH MIAMI
PUBLIC WORKS UTILITIES

WINSON WATER TREATMENT PLANT
BID PACKAGE 3: WTP REHABILITATION
SODIUM HYPOCHLORITE FACILITIES
LIFE SAFETY AND PROPOSED PLANS

DATE: JUNE 2014
SHEET: 177 OF 335
DRAWING: S-37

PERMITTING

PLOT DATE: 6/10/2014 5:28 p.m. BY: HSCALZ

XREFs= ..\Block\44238-004-BP3-TB,..\Base-BP3\S-BP3-Hypochlorite-Plan

File = H:\44238-004\Drawings\Bid Package 3 - WTP Rehab\Struct\44238-004BP3-S37 Saved by ccifuentes Save date = 6/9/2014 8:28 p.m.

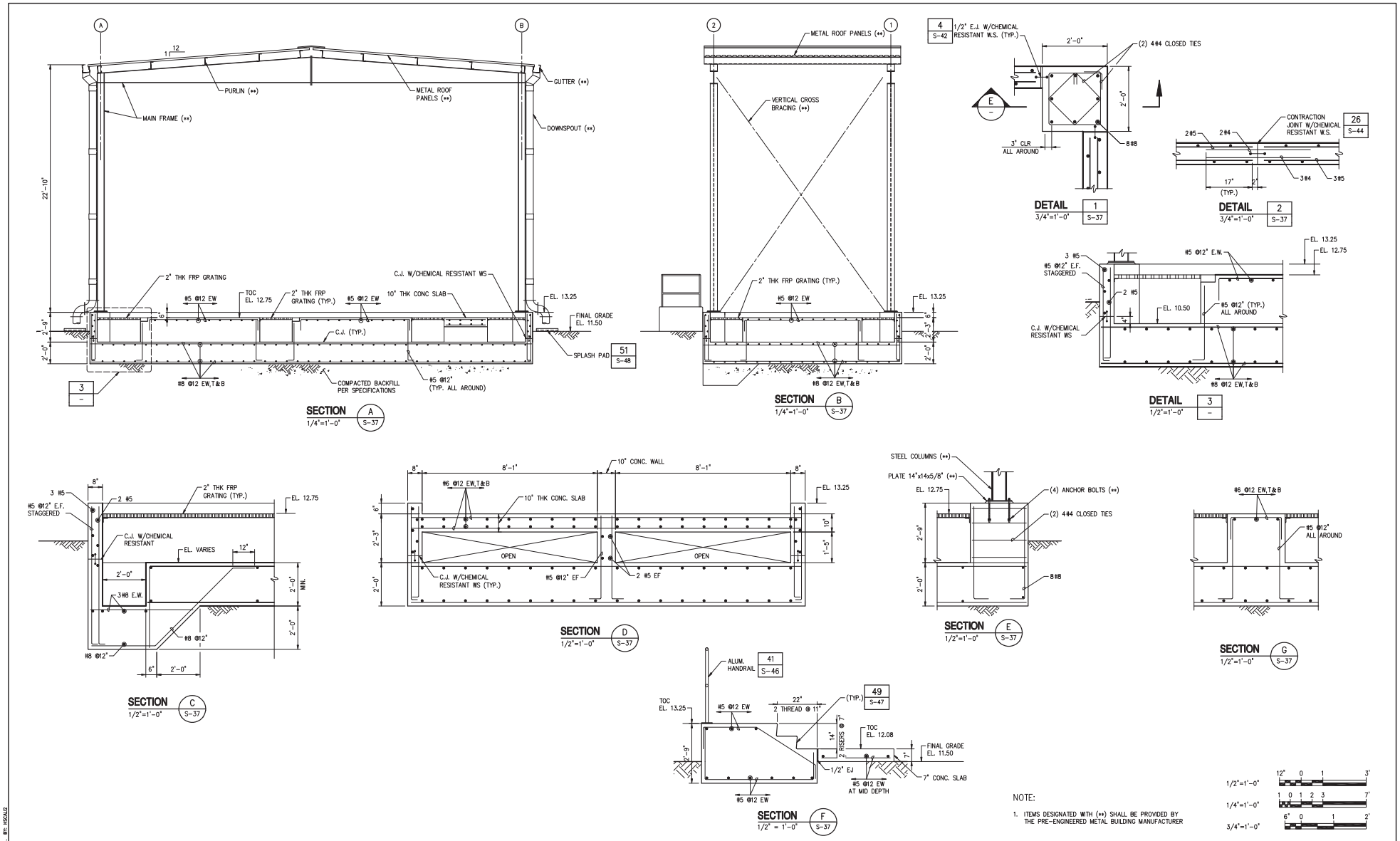


| NO. | DATE | ISSUED FOR | BY |
|---|---|---|---|

DESIGNED J.P.S.
DRAWN A.B.C.
CHECKED A.F.H.
PROJ. ENGR. G.A.B.

JEAN PAUL SILVA P.E.
No. 66522

**HAZEN AND SAWYER**
Environmental Engineers & Scientists
4000 Hollywood Boulevard, Suite 750N
Hollywood, Florida 33021
Certificate of Authorization Number: 2771

SCALE: AS NOTED

CLIENTS PROJECT: –
ENGINEERS PROJECT: 44238-004
CAD REFERENCE: 44238-004BP3-S38

NORTH MIAMI FLORIDA — CITY OF NORTH MIAMI PUBLIC WORKS UTILITIES

WINSON WATER TREATMENT PLANT
BID PACKAGE 3: WTP REHABILITATION

SODIUM HYPOCHLORITE FACILITIES
SECTIONS AND DETAILS

DATE: JUNE 2014
SHEET: 178 OF 335
DRAWING: S-38

PERMITTING

PLOT DATE: 6/10/2014 5:30 p.m. BY: HSCALI2

XREFs= ..\Block\44238-004-BP3-TB,..\Base-BP3\S-BP3-Hypochlorite-Sections

File = H:\44238-004\Drawings\Bid Package 3 - WTP Rehab\Struct\44238-004BP3-S38 Saved by HScali1 Save date = 6/9/2014 5:18 p.m.

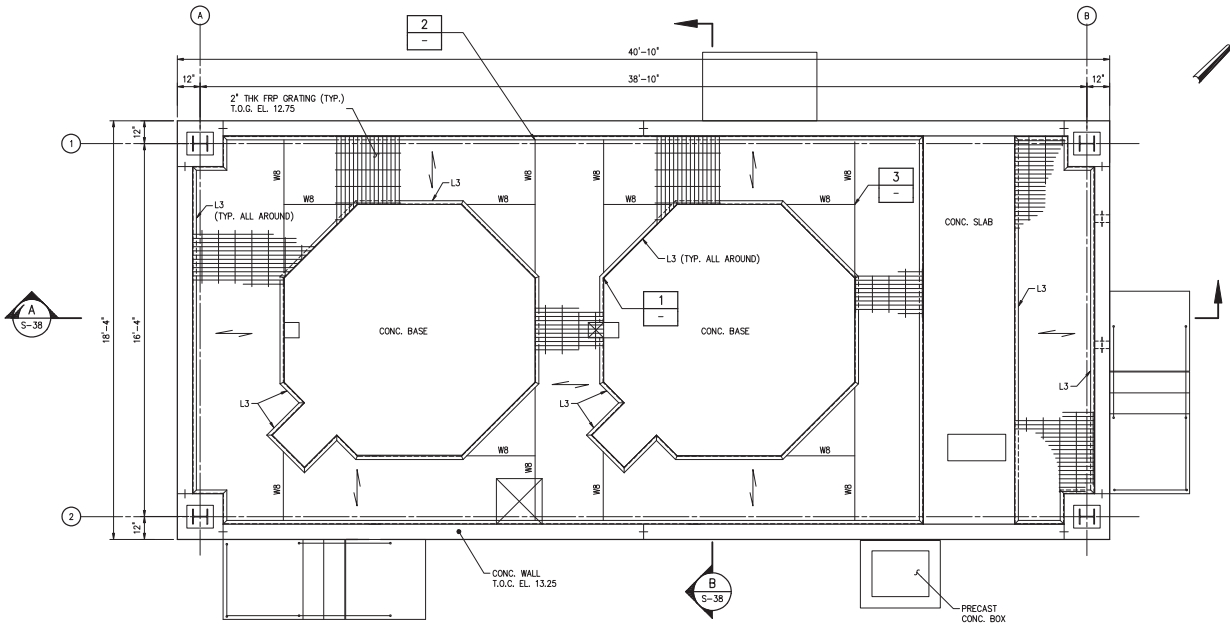


GRATING PLAN
3/8"=1'-0"

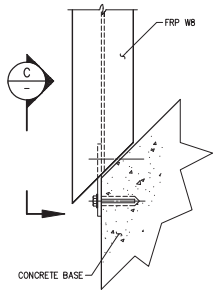


DETAIL 1
1 1/2" = 1'-0"

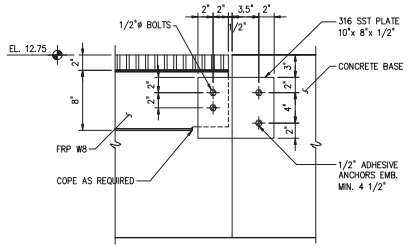


SECTION C
1 1/ 2" = 1'-0"

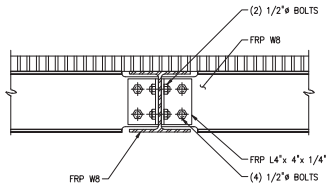


DETAIL 3
1 1/2"= 1'-0"

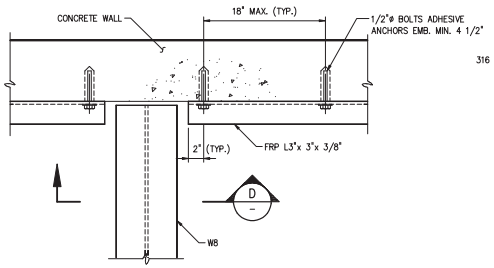


DETAIL 2
1 1/2"=1'-0"

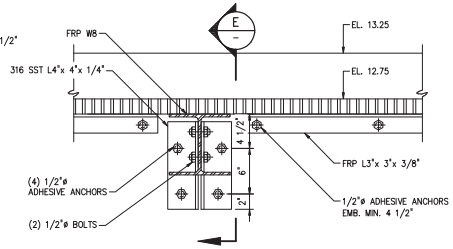


SECTION D
1 1/2"= 1'-0"

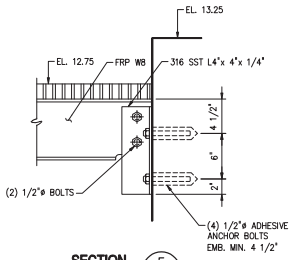


SECTION E
1 1/2"=1'-0"

LEGEND:

1. W8 MEANS W8"x 8"x 3/8" FRP
   L3 MEANS L3"x 3"x 3/8" FRP
2. ALL BOLTS AND ANCHOR BOLTS SHALL BE 316 SST.

NOTES:

1. PROVIDE THE REQUIRED OPENINGS FOR PIPES. REFER TO MECHANICAL DRAWINGS.
2. REFER TO SPECIFICATION SECTION 06610 FOR ADDITIONAL REQUIREMENTS.

3/8"=1'-0" 12" 0 1 2 4'
1 1/2"=1'-0" 4" 0 1'

| NO. | DATE | ISSUED FOR | BY |
|---|---|---|---|

DESIGNED J.P.S.
DRAWN A.B.C.
CHECKED A.F.H.
PROJ. ENGR. G.A.B.

JEAN PAUL SILVA P.E.
No. 66522

HAZEN AND SAWYER
Environmental Engineers & Scientists
4000 Hollywood Boulevard, Suite 750N
Hollywood, Florida 33021
Certificate of Authorization Number: 2771

SCALE: AS NOTED

CLIENTS PROJECT: –
ENGINEERS PROJECT: 44238-004
CAD REFERENCE: 44238-004BP3-S39

NORTH MIAMI FLORIDA
CITY OF NORTH MIAMI
PUBLIC WORKS UTILITIES

WINSON WATER TREATMENT PLANT
BID PACKAGE 3: WTP REHABILITATION
SODIUM HYPOCHLORITE FACILITIES GRATING PLAN AND DETAILS

DATE: JUNE 2014
SHEET: 179 OF 335
DRAWING: S-39

PERMITTING

PLOT DATE: 6/10/2014 5:33 p.m. BY: HSCALZ

XREFs= ..\Tblock\44238-004-BP3-TB,..\Base-BP3\S-BP3-Hypochlorite-Plan

File = H:\44238-004\Drawings\Bid Package 3 - WTP Rehab\Struct\44238-004BP3-S39 Saved by cafuentes Save date = 6/9/2014 7:36 p.m.

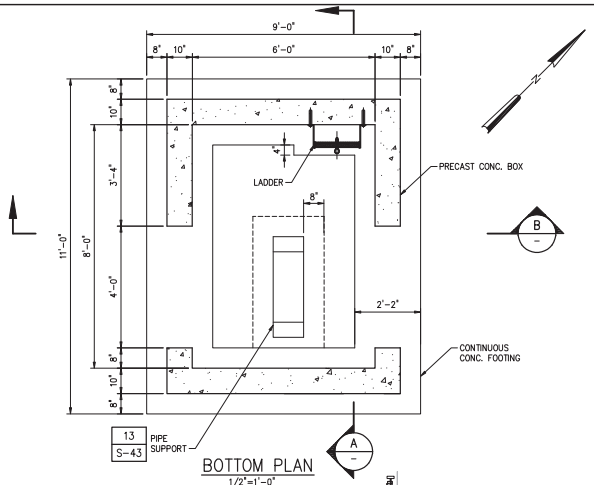


BOTTOM PLAN
1/2"=1'-0"

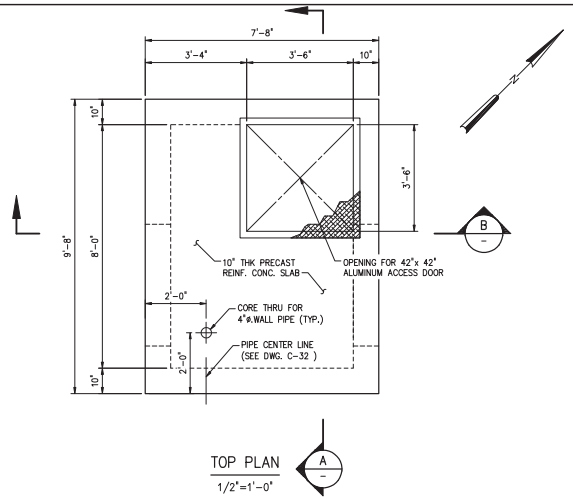


TOP PLAN
1/2"=1'-0"

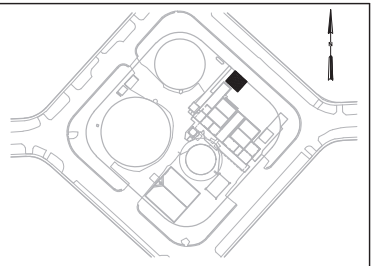

LOCATION MAP

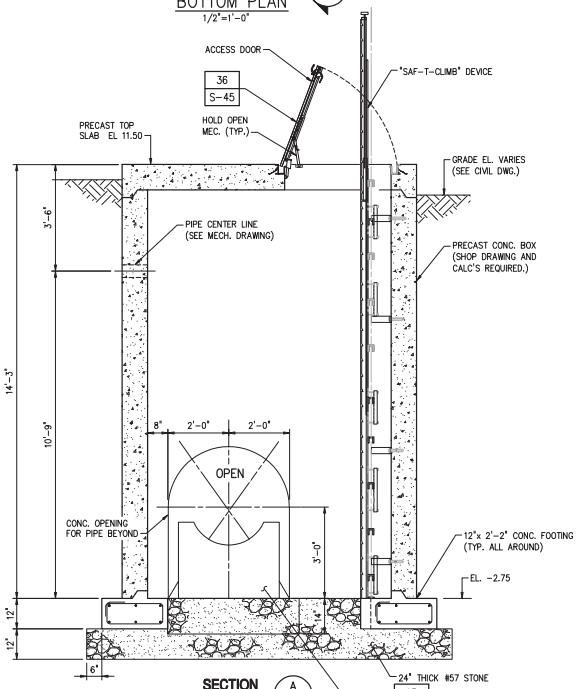


SECTION A
1/2"=1'-0"

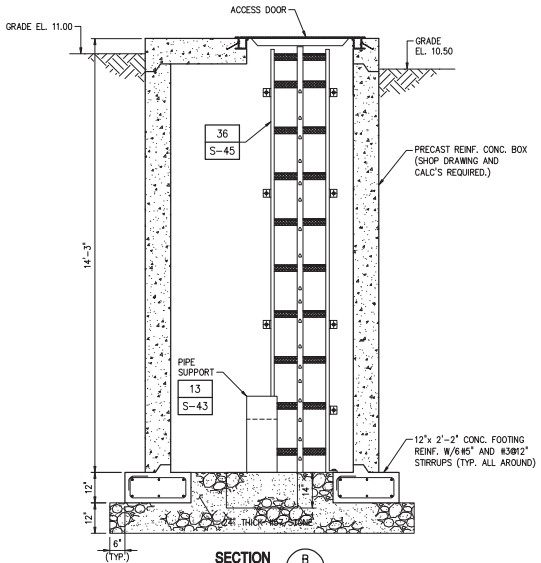


SECTION B
1/2"=1'-0"

NOTES:

1. "SAF-T-CLIMB" OR EQUAL TYPE DEVICE SHALL BE OF ALL TYPE 316 STAINLESS STEEL.
2. ALL FASTENERS SHALL BE OF TYPE 316 STAINLESS STEEL.
3. LADDER SHALL BE OF ALL TYPE 316 STAINLESS STEEL.
4. ALL ANCHOR SHALL BE OF TYPE 316 STAINLESS STEEL.

1/2"=1'-0" 12" 0 1 3'

| NO. | DATE | ISSUED FOR | BY |
|---|---|---|---|

DESIGNED J.P.S.
DRAWN H.F.M.
CHECKED A.F.H.
PROJ. ENGR. G.A.B.

JEAN PAUL SILVA P.E.
No. 66522

HAZEN AND SAWYER
Environmental Engineers & Scientists
4000 Hollywood Boulevard, Suite 750N
Hollywood, Florida 33021
Certificate of Authorization Number: 2771

SCALE 1/2"=1'-0"

CLIENTS PROJECT: –
ENGINEERS PROJECT: 44238-004
CAD REFERENCE: 44238-004BP3-S40

NORTH MIAMI FLORIDA
CITY OF NORTH MIAMI
PUBLIC WORKS UTILITIES

WINSON WATER TREATMENT PLANT
BID PACKAGE 3: WTP REHABILITATION
CHEMICAL INJECTION VAULT
PLAN AND SECTION

DATE: JUNE 2014
SHEET: 180 OF 335
DRAWING: S-40

PERMITTING

PLOT DATE: 6/10/2014 5:35 p.m. BY: HSCALZ

XREFs= ..\Thlock\44238-004-BP3-TB,..\Base-BP3\S-BP3-ChemInPoint-Section

File = H:\44238-004\Drawings\Bid Package 3 - WTP Rehab\Struct\44238-004BP3-S40 Saved by HScalz1 Save date = 6/9/2014 7:46 p.m.

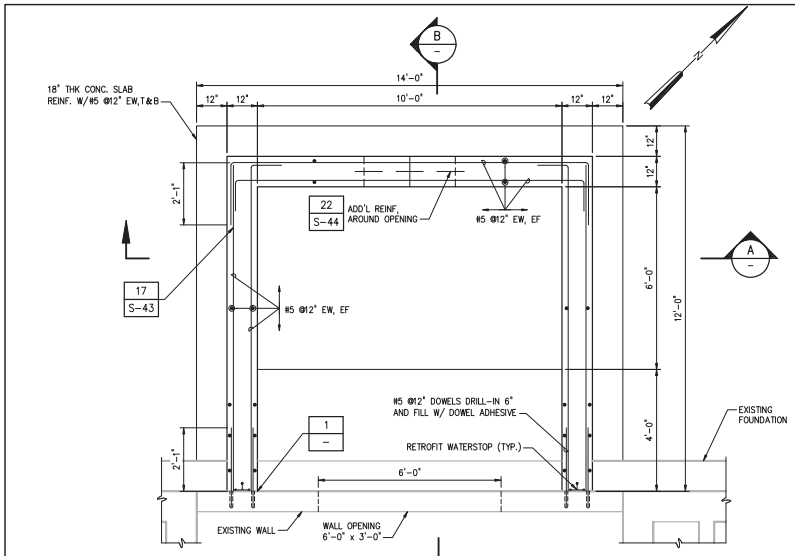


BOTTOM PLAN
1/2" = 1'-0"

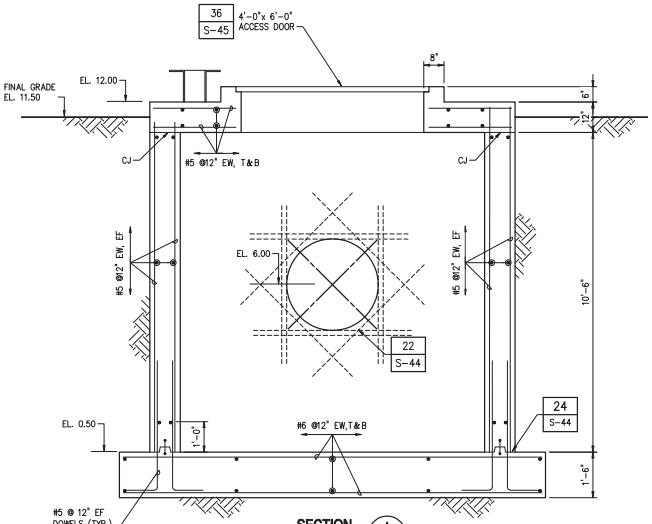


SECTION A
1/2" = 1'-0"

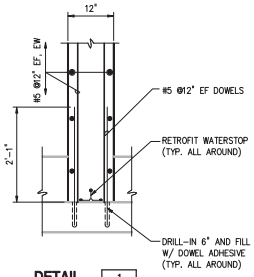


DETAIL 1
3/4" = 1'-0"

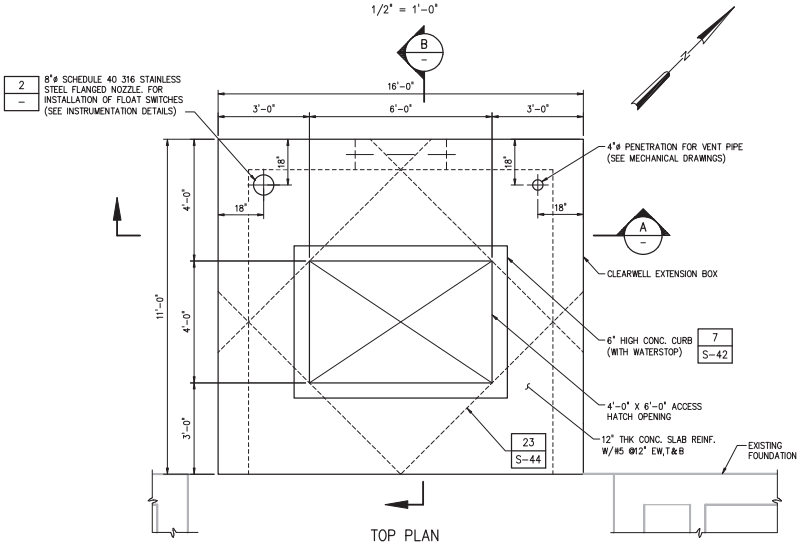


TOP PLAN
1/2" = 1'-0"

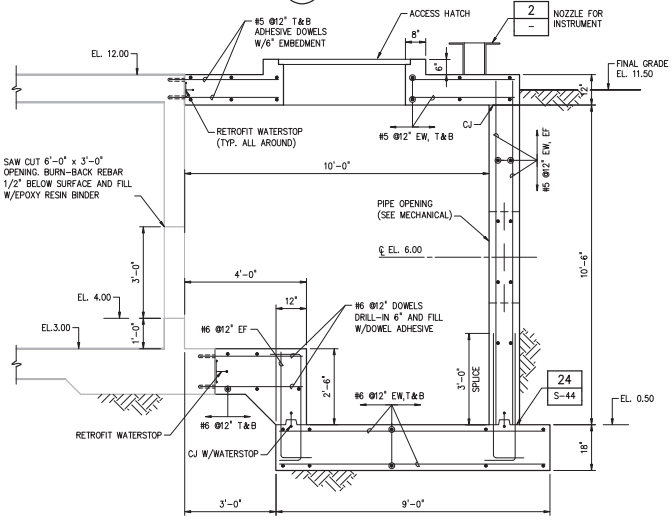


SECTION B
1/2" = 1'-0"

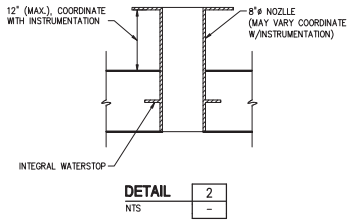


DETAIL 2
NTS

3/4"=1'-0" 6" 0 1 2'
1/2"=1'-0" 12" 0 1 3'

| NO. | DATE | ISSUED FOR | BY |
|---|---|---|---|

DESIGNED J.P.S.
DRAWN C.C.P.
CHECKED A.F.H.
PROJ. ENGR. G.A.B.

JEAN PAUL SILVA P.E.
No. 66522

HAZEN AND SAWYER
Environmental Engineers & Scientists
4000 Hollywood Boulevard, Suite 750N
Hollywood, Florida 33021
Certificate of Authorization Number: 2771

SCALE: AS NOTED

CLIENTS PROJECT: –
ENGINEERS PROJECT: 44238-004
CAD REFERENCE: 44238-004BP3-S41

NORTH MIAMI FLORIDA
CITY OF NORTH MIAMI
PUBLIC WORKS UTILITIES

WINSON WATER TREATMENT PLANT
BID PACKAGE 3: WTP REHABILITATION

CLEARWELL EXTENSION
PLAN AND SECTION

DATE: JUNE 2014
SHEET: 181 OF 335
DRAWING: S-41

PERMITTING

PLOT DATE: 6/10/2014 5:58 p.m. BY: HSCALI2

XREFs= ..\Tblock\44238-004-BP3-TB,..\Base-BP3\S-BP3-Filters-Sections

File = H:\44238-004\Drawings\Bid Package 3 - WTP Rehab\Struct\44238-004BP3-S41 Saved by HScali1 Save date = 6/9/2014 5:58 p.m.

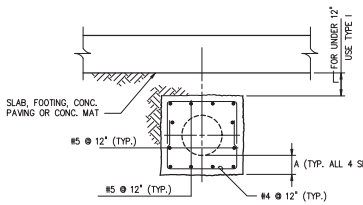


TYPE II
SECTION

NOTES:

1. ALL PIPES, CONDUITS AND DUCTS BELOW REINFORCED CONC. ON GRADE, SHALL BE CONCRETE ENCASE.
2. EXTEND THE ENCASEMENT (MIN.) 6" BEYOND THE EDGE OF THE REINFORCED CONCRETE.

| PIPE SIZE | DIM "A" |
|---|---|
| LESS THAN 8" | 6" |
| ø 8" – 24" | 9" |
| ø 24" – 60" | 12" |

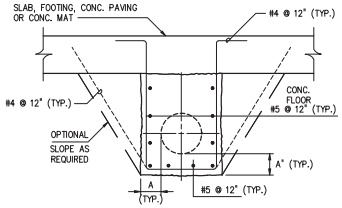


TYPE I
SECTION

CONCRETE ENCASEMENT

**DETAIL** 1
NTS –

## DEVELOPMENT LENGTH OF STANDARD HOOKS

FOR BARS IN TENSION

fy = 60,000 psi  fc' = 4000 psi OR GREATER

| BAR SIZE | DEVELOPMENT LENGTH, ℓdh | |
|---|---|---|
| | BASIC | W/ CONC COVER * |
| #3 | 8" | 6" |
| #4 | 10" | 7" |
| #5 | 1'–0" | 9" |
| #6 | 1'–3" | 11" |
| #7 | 1'–5" | 1'–0" |
| #8 | 1'–7" | 1'–2" |
| #9 | 1'–10" | 1'–4" |
| #10 | 2'–1" | 1'–6" |
| #11 | 2'–3" | 1'–7" |

SIDE COVER NORMAL TO PLANE OF HOOK AT LEAST 2 1/2"; AND FOR 90° HOOK, END COVER BEYOND OUTSIDE END OF HOOK AT LEAST 2".

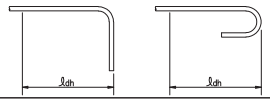


**DETAIL** 2
NTS –

## BASIC DEVELOPMENT LENGTH AND SPLICE LENGTH

FOR BARS IN TENSION

** BASED ON MATERIALS AND CONDITIONS AS FOLLOWS:
fy = 60,000 psi  fc' = 4000 psi OR GREATER
UNCOATED BARS  NORMAL WEIGHT CONCRETE
CLEAR COVER ≥ 1.5 INCHES

| BASIC DEVELOPMENT LENGTH ℓd | | | | BAR SIZE | CLASS B SPLICE LENGTH 1.3 x ℓ d | | | |
|---|---|---|---|---|---|---|---|---|
| CLEAR SPACING ≥ 3" | | CLEAR SPACING < 3" | | | CLEAR SPACING ≥ 3" | | CLEAR SPACING < 3" | |
| BASIC | TOP * | BASIC | TOP * | | BASIC | TOP * | BASIC | TOP * |
| 1'–0" | 1'–0" | 1'–0" | 1'–4" | # 3 | 1'–0" | 1'–3" | 1'–4" | 1'–8" |
| 1'–0" | 1'–3" | 1'–7" | 2'–1" | # 4 | 1'–3" | 1'–8" | 2'–1" | 2'–9" |
| 1'–3" | 1'–7" | 2'–4" | 3'–0" | # 5 | 1'–7" | 2'–0" | 3'–0" | 3'–11" |
| 1'–6" | 1'–11" | 3'–1" | 4'–0" | # 6 | 1'–11" | 2'–5" | 4'–0" | 5'–2" |
| 2'–5" | 3'–1" | 4'–11" | 6'–4" | # 7 | 3'–1" | 4'–0" | 6'–4" | 8'–3" |
| 3'–0" | 3'–11" | 6'–0" | 7'–9" | # 8 | 3'–11" | 5'–1" | 7'–9" | 10'–1" |
| 3'–8" | 4'–9" | 6'–9" | 8'–9" | # 9 | 4'–9" | 6'–3" | 8'–9" | 11'–4" |
| 4'–6" | 5'–10" | 7'–7" | 9'–10" | # 10 | 5'–10" | 7'–7" | 9'–10" | 12'–9" |
| 5'–5" | 7'–0" | 8'–5" | 10'–11" | # 11 | 7'–0" | 9'–1" | 10'–11" | 14'–2" |

* TOP REINFORCEMENT IS HORIZONTAL REINFORCEMENT SO PLACED THAT MORE THAN 12 INCHES OF FRESH CONCRETE IS CAST IN THE MEMBER BELOW THE REINFORCEMENT.

** FOR MATERIALS OR CONDITIONS DIFFERENT FROM THOSE STATED, LENGTHS SHOWN IN CHART SHALL BE MODIFIED TO CONFORM TO THE PROVISIONS OF ACI 318, SECTION 12.2.

**DETAIL** 3
NTS –

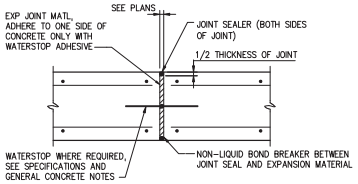


TYPICAL EXPANSION JOINT

**DETAIL** 4
NTS –

NOTES

1. JOINTS SHALL BE FORMED BY AN APPROVED JOINT INSERT. SAWCUTTING OF JOINTS WILL NOT BE ALLOWED.
2. DEPTH SHALL BE 1 1/2" IN REINF CONC DEPTH SHALL BE 1/3 OF CONCRETE THICKNESS IN UNREINFORCED CONCRETE PAVEMENT.

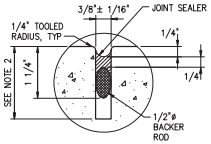


TYPICAL SEALED JOINT

**DETAIL** 5
NTS –

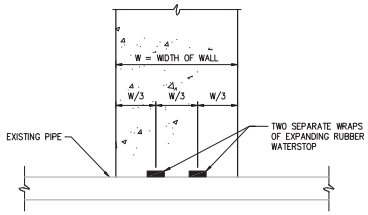


NOTE: EACH WRAP SHALL BE LAPPED 4", WITH THE LAP ABUTTING SIDE BY SIDE. LAPS SHALL BE SEPARATED BY 180°.

WATERSTOP CONNECTION AROUND EXISTING PIPE

**DETAIL** 6
NTS –

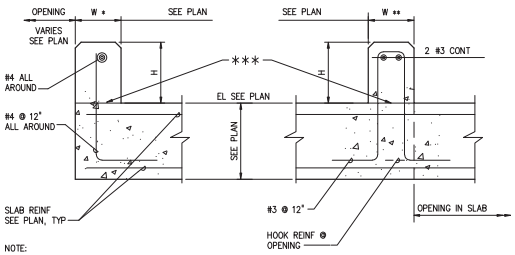


NOTE:
W* DENOTES CURBS LESS THAN 8"
W** DENOTES CURBS EQUAL TO OR GREATER THAN 8"
DOWELS MAY BE CAST IN OR ANCHORED WITH DOWEL ADHESIVE SYSTEM WITH A 6" MINIMUM EMBEDMENT.
*** INDICATES PROVIDE WATERSTOP FOR CONTAINMENT AREAS.

TYPICAL CONCRETE CURB

**DETAIL** 7
NTS –

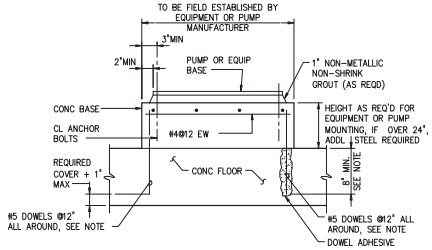


NOTE: DOWELS MAY BE CAST IN WITH 90° HOOK OR ANCHORED WITH DOWEL ADHESIVE AT CONTRACTORS OPTION. WHERE FLOOR IS 8" THICK OR LESS, USE #4 DOWELS EMBEDDED TO WITHIN 2" OF BOTTOM OF FLOOR SLAB.

TYP PUMP OR EQUIP BASE

**DETAIL** 8
NTS –

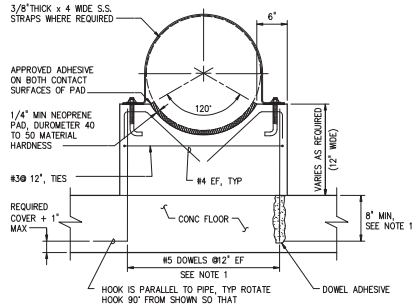


NOTE: 1 DOWELS MAY BE CAST IN WITH 90° HOOK OR ANCHORED WITH DOWEL ADHESIVE AT CONTRACTORS OPTION. WHERE FLOOR IS 8" THICK OR LESS, USE #4 DOWELS EMBEDDED TO WITHIN 2" OF BOTTOM OF FLOOR SLAB.

CRADLE PIPE SUPPORT

**DETAIL** 9
NTS –

| NO. | DATE | ISSUED FOR | BY |
|---|---|---|---|

DESIGNED G.A.B.
DRAWN F.C.T.
CHECKED J.N.M.
PROJ. ENGR. G.A.B.

GEORGE A. BROWN P.E.
No. 56076

HAZEN AND SAWYER
Environmental Engineers & Scientists
4000 Hollywood Boulevard, Suite 750N
Hollywood, Florida 33021
Certificate of Authorization Number: 2771

SCALE NTS

CLIENTS PROJECT: –
ENGINEERS PROJECT: 44238-004
CAD REFERENCE: 44238-004BP3-S42

NORTH MIAMI FLORIDA
CITY OF NORTH MIAMI
PUBLIC WORKS UTILITIES

WINSON WATER TREATMENT PLANT
BID PACKAGE 3: WTP REHABILITATION
STRUCTURAL DETAILS SHEET 1

DATE: JUNE 2014
SHEET: 182 OF 335
DRAWING: S-42

PERMITTING

PLOT DATE: 6/10/2014 5:43 p.m. BY: HSCAL2
XREFs= ..\Tblock\44238-004-BP3-TB
File = H:\44238-004\Drawings\Bid Package 3 - WTP Rehab\Struct\44238-004BP3-S42 Saved by HScal1 Save date = 6/9/2014 8:28 p.m.

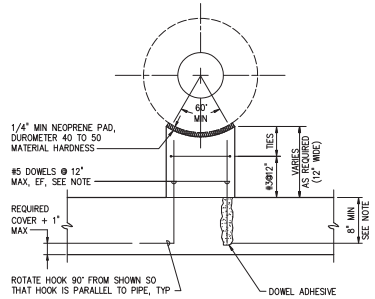


NOTE:
1 DOWELS MAY BE CAST IN WITH 90° HOOK OR ANCHORED WITH DOWEL ADHESIVE AT CONTRACTORS OPTION. WHERE FLOOR IS 8" THICK OR LESS, USE #4 DOWELS EMBEDDED TO WITHIN 2" OF BOTTOM OF FLOOR SLAB.

PIER – PIPE SUPPORT

**DETAIL** 10
NTS –

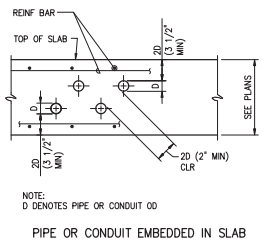


NOTE:
D DENOTES PIPE OR CONDUIT OD

PIPE OR CONDUIT EMBEDDED IN SLAB

**DETAIL** 11
NTS –

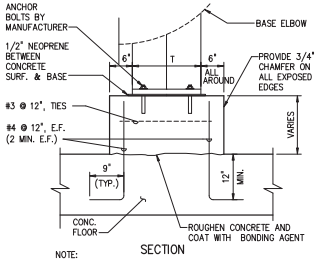


SECTION

NOTE:
1 DOWELS MAY BE CAST IN WITH 90° HOOK OR ANCHORED WITH DOWEL ADHESIVE AT CONTRACTORS OPTION. WHERE FLOOR IS 8" THICK OR LESS, USE #4 DOWELS EMBEDDED TO WITHIN 2" OF BOTTOM OF FLOOR SLAB.

BASE ELBOW SUPPORT ON SLAB

**DETAIL** 12
NTS –

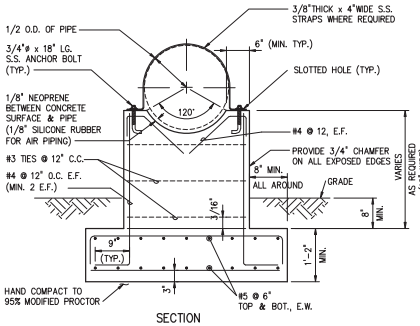


SECTION

CRADLE TYPE PIPE SUPPORT ON GRADE

**DETAIL** 13
NTS –

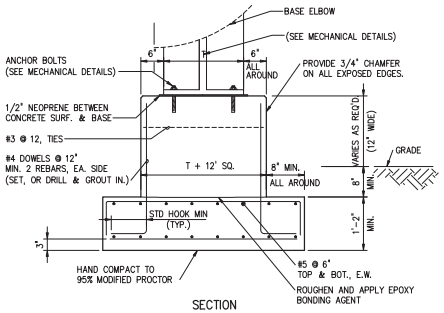


SECTION

BASE ELBOW SUPPORT ON GRADE

**DETAIL** 14
NTS –

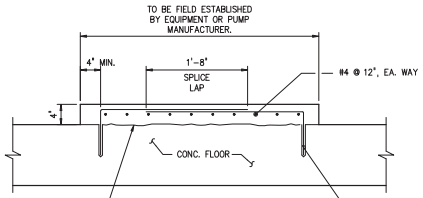


SECTION

HOUSE KEEPING PAD DETAIL

**DETAIL** 15
NTS –

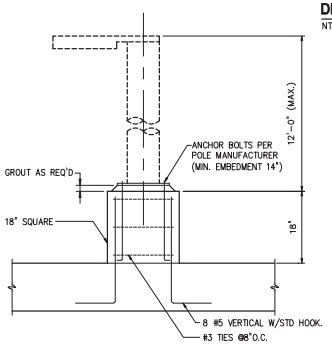


LIGHT POLE PEDESTAL ON SLAB

**DETAIL** 16
NTS –

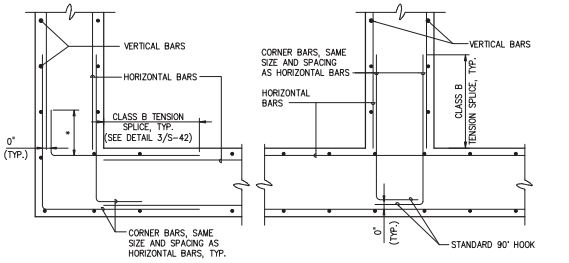


CORNER

INTERSECTION

TYPICAL HORIZONTAL WALL REINFORCING

**DETAIL** 17
NTS –

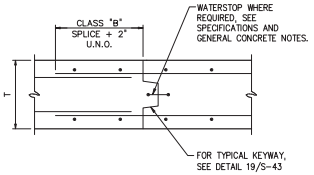


TYPICAL CONSTRUCTION JOINT

**DETAIL** 18
NTS –

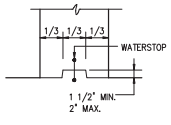


TYPICAL KEYWAY

**DETAIL** 19
NTS –

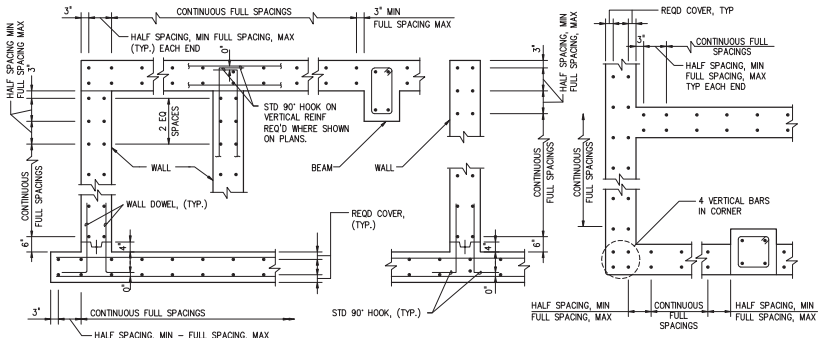


SECTION – WALLS AND SLABS

TYPICAL BAR PLACEMENT

**DETAIL** 20
NTS –

NOTES:
1. ORIENTATION OF OUTSIDE AND INSIDE LAYERS OF REINF SHALL BE AS SHOWN ON PLANS.
2. "FULL SPACING" IS BAR SPACING CALLED OUT ON PLANS.

PLAN – WALLS

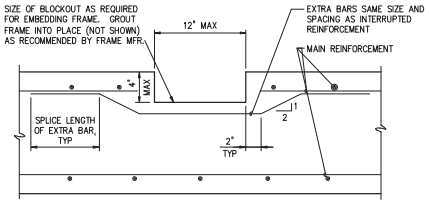


TYPICAL BLOCKOUT FOR EMBEDDED EQUIPMENT FRAME

**DETAIL** 21
NTS –

| NO. | DATE | ISSUED FOR | BY |
|---|---|---|---|

DESIGNED J.P.S.
DRAWN C.F.T.
CHECKED A.F.H.
PROJ. ENGR. G.A.B.

JEAN PAUL SILVA P.E.
No. 66522

HAZEN AND SAWYER
Environmental Engineers & Scientists
4000 Hollywood Boulevard, Suite 750N
Hollywood, Florida 33021
Certificate of Authorization Number: 2771

SCALE NTS

CLIENTS PROJECT: –
ENGINEERS PROJECT: 44238-004
CAD REFERENCE: 44238-004BP3-S43

NORTH MIAMI FLORIDA
CITY OF NORTH MIAMI
PUBLIC WORKS UTILITIES

WINSON WATER TREATMENT PLANT
BID PACKAGE 3: WTP REHABILITATION
STRUCTURAL DETAILS SHEET 2

DATE: JUNE 2014
SHEET: 183 OF 335
DRAWING: S-43

PERMITTING

PLOT DATE: 6/10/2014 5:43 p.m. BY: HSCAL2
XREFs= ..\Tblock\44238-004-BP3-TB
File = H:\44238-004\Drawings\Bid Package 3 - WTP Rehab\Struct\44238-004BP3-S43 Saved by HScal1 Save date = 6/9/2014 8:54 p.m.

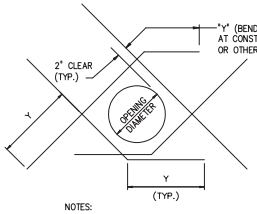


| BAR SIZE | "Y" GRADE 60 |
|---|---|
| #4 | 24" |
| #5 | 24" |
| #6 | 24" |
| #7 | 29" |
| #8 | 36" |
| #9 | 44" |

NOTES:
1. CUT NORMAL REINFORCEMENT CLEAR OF OPENING
2. DIAGONAL BARS TO BE PLACED:
   a. AT ℄ OF WALLS OR SLAB WHERE ONE LAYER OF REINFORCEMENT IS PROVIDED.
   b. AT EACH FACE OF WALL OR SLAB WHERE TWO LAYERS OR REINFORCEMENT ARE PROVIDED.
3. UNLESS OTHERWISE NOTED SIZE OF DIAGONAL BARS SHALL BE THE SIZE OF THE LARGEST NORMAL REINF. BAR CUT.
4. THIS DETAIL TO BE USED ONLY WHEN NO OTHER DETAIL IS INDICATED ON THE DRAWING.

TYPICAL BASIC DIAGONAL REINFORCEMENT AT CIRCULAR OPENINGS

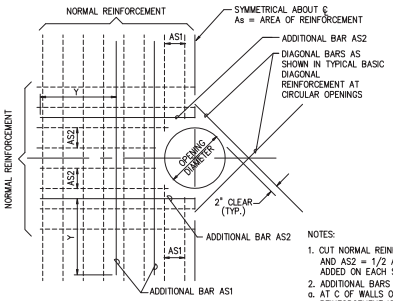


NOTES:
1. CUT NORMAL REINFORCEMENT AT OPENINGS. AS1 AND AS2 = 1/2 AREA OF CUT BARS TO BE ADDED ON EACH SIDE OF OPENING.
2. ADDITIONAL BARS AS1 AND AS2 TO BE PLACED:
   a. AT C OF WALLS OR SLABS WHERE ONE LAYER OF REINFORCEMENT IS PROVIDED.
   b. AT EACH FACE OF WALLS OR SLABS WHERE TWO LAYERS OF REINFORCEMENT ARE PROVIDED.
3. THIS DETAIL TO BE USED ONLY WHEN NO OTHER DETAIL IS INDICATED ON THE DRAWINGS.

TYPICAL ADDED REINFORCEMENT AT CIRCULAR OPENINGS

**DETAIL** 22
NTS –

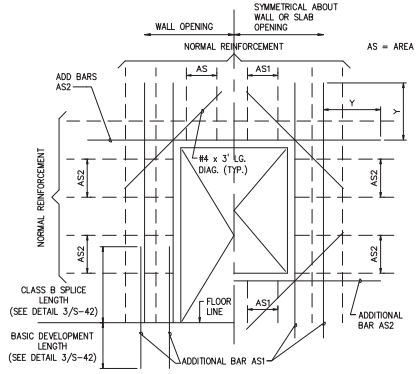


| BAR SIZE | GRADE 60 Y |
|---|---|
| #4 | 24" |
| #5 | 24" |
| #6 | 24" |
| #7 | 29" |
| #8 | 36" |
| #9 | 44" |
| #10 | 54" |

NOTES:
1. CUT NORMAL REINFORCEMENT AT OPENINGS. AS1 AND AS2 = 1/2 AREA OF CUT BARS TO BE ADDED ON EACH SIDE OF OPENING.
2. ADDITIONAL BARS AS1 AND AS2 TO BE PLACED:
   a. AT C OF WALLS OR SLABS WHERE ONE LAYER OF L REINFORCEMENT IS PROVIDED.
   b. AT EACH FACE OF WALLS OR SLABS WHERE TWO LAYERS OF REINFORCEMENT ARE PROVIDED.
3. THIS DETAIL TO BE USED ONLY WHEN NO OTHER DETAIL IS INDICATED ON THE DRAWINGS.

ADDITIONAL REINFORCEMENT AT RECTANGULAR OPENINGS

**DETAIL** 23
NTS –

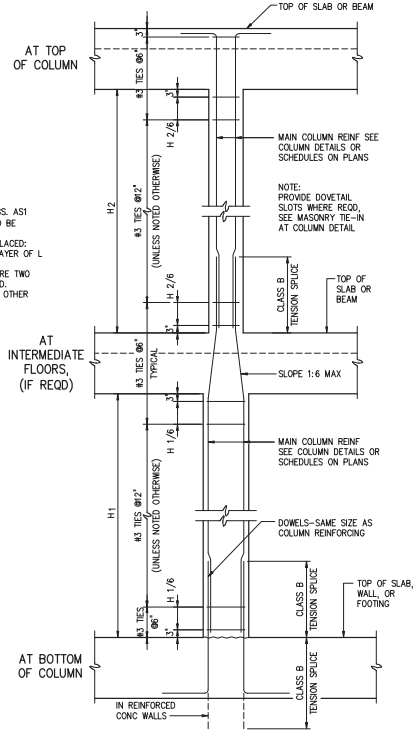


TYPICAL COLUMN ELEVATION

**DETAIL** 27
NTS –

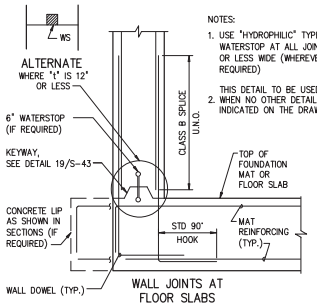


NOTES:
1. USE "HYDROPHILIC" TYPE WATERSTOP AT ALL JOINTS 12" OR LESS WIDE (WHEREVER WS IS REQUIRED)

THIS DETAIL TO BE USED ONLY
2. WHEN NO OTHER DETAIL IS INDICATED ON THE DRAWINGS

WALL JOINTS AT FLOOR SLABS

SECTION

TYPICAL WALL TO SLAB/ FOUNDATION CONSTRUCTION JOINT

**DETAIL** 24
NTS –

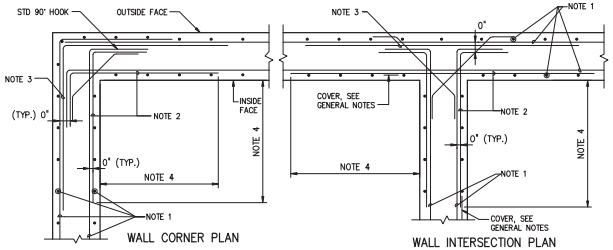


WALL CORNER PLAN

WALL INTERSECTION PLAN

NOTES: (WALL REINFORCING)
1. BASIC WALL REINF. AS SHOWN IN DETAIL 0331700
2. ADDITIONAL INSIDE REINFORCING BARS AT CORNERS AND WALL INTERSECTIONS. SEE DESIGN DRAWINGS FOR BAR SIZE, SPACING, & LENGTH. ALTERNATE WITH BASIC REINF.
3. ADDITIONAL OUTSIDE REINF. BAR AT CORNERS. SEE DESIGN DRAWINGS FOR BAR SIZE AND LENGTH. ALTERNATE WITH BASIC HORIZ. BARS.
4. 1/4 THE CLEAR DISTANCE TO OPPOSITE WALL FOR THE SHORTER WALL PANEL. U.O.N. ON PLANS.

TYPICAL ADDED HORIZONTAL REINFORCEMENT AT WALL INTERSECTIONS

**DETAIL** 25
NTS –

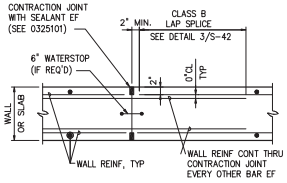


TYPICAL CONTRACTION JOINT

**DETAIL** 26
NTS –

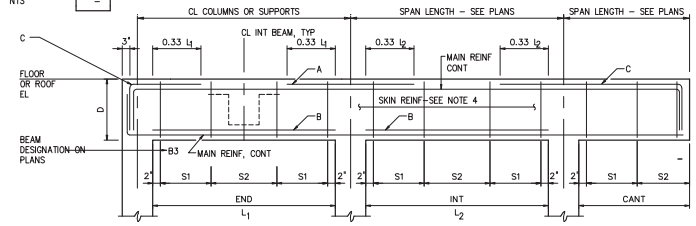


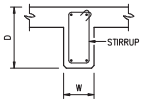


TYPICAL BEAM SECTION

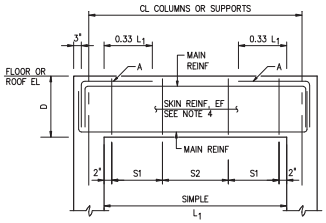


NOTES:
1 WHERE BEAMS FRAME INTO CONCRETE WALLS, WALLS SHALL BE BLOCKED OUT FULL HEIGHT AND WIDTH OF BEAM TO PROVIDE A MINIMUM 8" SEAT FOR BEAM BEARING. WALL REINFORCEMENT SHALL NOT BE INTERRUPTED THROUGH BLOCKOUT.

2 S1 = 2x'D" FOR STIRRUP SPACING SEE BEAM SCHEDULE

3 CONTINUOUS BOTTOM BARS IN ALL BEAMS MAY BE SPLICED AT COLUMN CENTERLINES. CONTINUOUS TOP BARS MAY BE SPLICED AT MID-SPAN.

4 UNLESS NOTED OTHERWISE, PROVIDE SKIN REINFORCEMENT BETWEEN TOP AND BOTTOM MAIN REINFORCEMENT AS FOLLOWS:
FOR BEAMS 18" OR LESS IN DEPTH, NO SKIN REINFORCEMENT IS REQUIRED
FOR BEAMS >18" THRU 36" IN DEPTH, PROVIDE #5@12" EF
FOR BEAMS >36" THRU 84" IN DEPTH, PROVIDE #5@6 EF
FOR BEAMS >84" IN DEPTH, SEE REMARKS IN BEAM SCHEDULE.

5 ALL STIRRUPS SHALL BE CLOSED TIES, TYPE T1, (ACI 315) UNLESS NOTED OTHERWISE.

6 SEE DRAWINGS FOR BEAM ELEVATION DIAGRAMS SPECIFICALLY REFERRED TO IN THE BEAM SCHEDULES.

7 WHEN TWO LAYERS OF FLEXURAL REINFORCEMENT ARE REQUIRED THE SPACING BETWEEN THE LAYERS SHALL BE 3 INCHES.

TYPICAL BEAM ELEVATIONS

**DETAIL** 28
NTS –

| NO. | DATE | ISSUED FOR | BY |
|---|---|---|---|

DESIGNED J.P.S.
DRAWN C.F.T.
CHECKED A.F.H.
PROJ. ENGR. G.A.B.

JEAN PAUL SILVA P.E.
No. 66522

HAZEN AND SAWYER
Environmental Engineers & Scientists
4000 Hollywood Boulevard, Suite 750N
Hollywood, Florida 33021
Certificate of Authorization Number: 2771

SCALE NTS

CLIENTS PROJECT: –
ENGINEERS PROJECT: 44238-004
CAD REFERENCE: 44238-004BP3-S44

NORTH MIAMI FLORIDA
CITY OF NORTH MIAMI
PUBLIC WORKS UTILITIES

WINSON WATER TREATMENT PLANT
BID PACKAGE 3: WTP REHABILITATION
STRUCTURAL DETAILS SHEET 3

DATE: JUNE 2014
SHEET: 184 OF 335
DRAWING: S-44

PERMITTING

PLOT DATE: 6/10/2014 5:45 p.m. BY: HSCALI2
XREFs= ..\Block\44238-004-BP3-TB
File = H:\44238-004\Drawings\Bid Package 3 – WTP Rehab\Struct\44238-004BP3-S44 Saved by HScalI1 Save date = 6/9/2014 7:15 p.m.

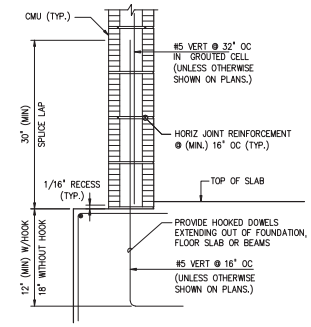


SECTION

TYPICAL VERTICAL REINFORCEMENT AT FLOOR

**DETAIL** 29
NTS –

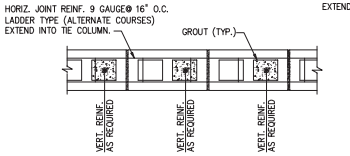


PLAN

TYPICAL SINGLE WYTHE BLOCK WALL REINFORCEMENT

**DETAIL** 30
NTS –

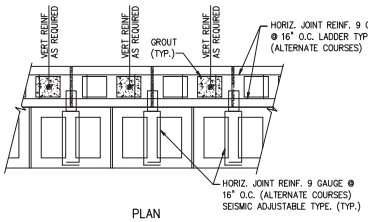


PLAN

TYPICAL DOUBLE WYTHE BLOCK WALL REINFORCEMENT

**DETAIL** 31A
NTS –

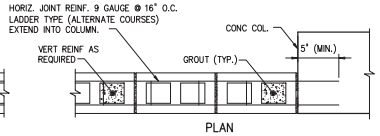


PLAN

TYPICAL LOAD BEARING MASONRY HORIZONTAL REINFORCEMENT AT COLUMN

**DETAIL** 31
NTS –

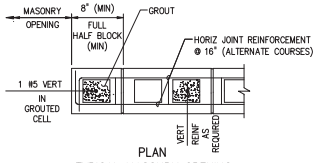


PLAN

TYPICAL MASONRY OPENING

**DETAIL** 32
NTS –

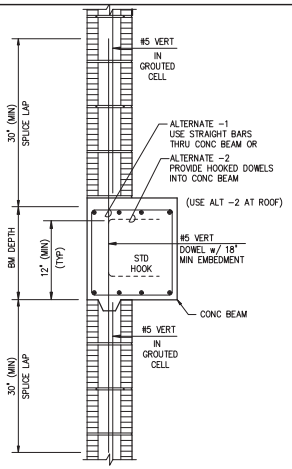


SECTION

TYPICAL VERTICAL REINFORCEMENT AT BEAM

**DETAIL** 32A
N.T.S. –

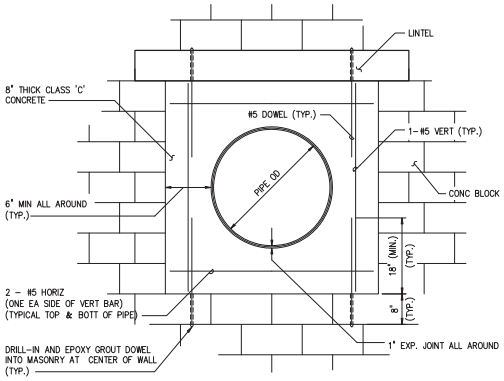


NOTE:
THIS DETAIL SHALL BE USED ONLY AT LOCATIONS WHERE NO OTHER PIPE PENETRATION DETAIL IS SHOWN ON THE DRAWINGS.

NOTE:
PIPE MUST BE SUPPORTED ON EACH SIDE OF WALL

ELEVATION

PIPE PENETRATION THRU CONCRETE BLOCK WALLS

**DETAIL** 33
NTS –

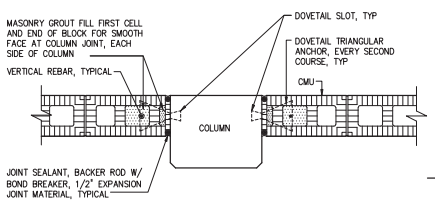


TYPICAL PARTITION WALL MASONRY TIE–IN AT COLUMN

**DETAIL** 34
NTS –

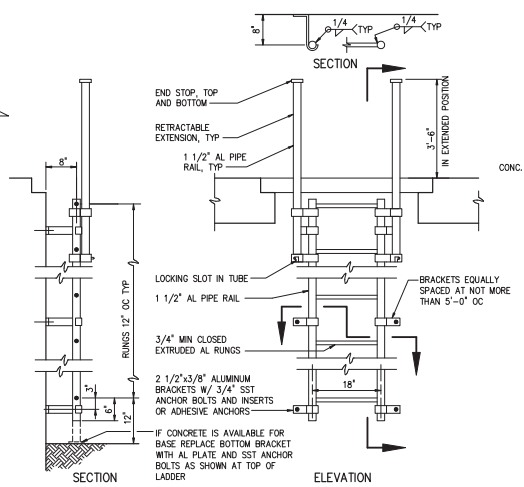


ALUMINUM LADDER WITH RETRACTABLE EXTENSION

**DETAIL** 35
NTS –

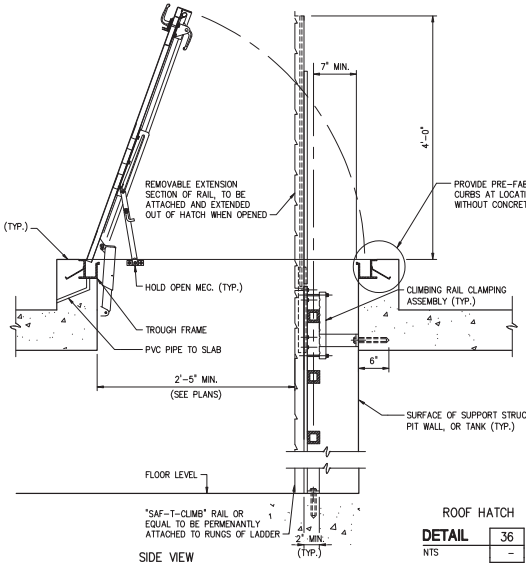


SIDE VIEW

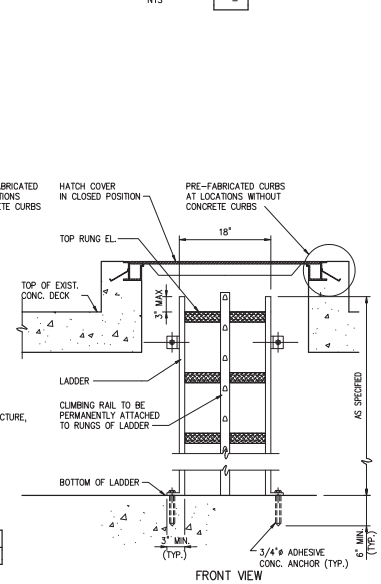


FRONT VIEW

ROOF HATCH

**DETAIL** 36
NTS –

NOTE:
1. ALL "SAF–T–CLIMB" OR EQUAL TYPE DEVICE SHALL BE TYPE 316 STAINLESS STEEL, ALL FASTENERS SHALL BE OF TYPE 316 STAINLESS STEEL.
2. ALL LADDER SHALL BE OF FIBERGLASS CONSTRUCTION ALL ANCHORS SHALL BE TYPE 316 STAINLESS STEEL.

| NO. | DATE | ISSUED FOR | BY |
|---|---|---|---|
| 1 | 4/1/14 | 100% QA COMMENTS | H.J.V. |

DESIGNED J.P.S.
DRAWN F.C.T.
CHECKED A.F.H.
PROJ. ENGR. G.A.B.

JEAN PAUL SILVA P.E.
No. 66522

**HAZEN AND SAWYER**
Environmental Engineers & Scientists
4000 Hollywood Boulevard, Suite 750N
Hollywood, Florida 33021
Certificate of Authorization Number: 2771

SCALE NTS

CLIENTS PROJECT: –
ENGINEERS PROJECT: 44238–004
CAD REFERENCE: 44238–004BP3–S45

NORTH MIAMI FLORIDA
CITY OF NORTH MIAMI
PUBLIC WORKS UTILITIES

WINSON WATER TREATMENT PLANT
BID PACKAGE 3: WTP REHABILITATION

STRUCTURAL DETAILS SHEET 4

DATE: JUNE 2014
SHEET: 185 OF 335
DRAWING: S–45

PERMITTING

PLOT DATE: 6/10/2014 5:48 p.m. BY: HSCAL2
XREFs= ..\Tblock\44238–004–BP3–TB
File = H:\44238–004\Drawings\Bid Package 3 – WTP Rehab\Struct\44238–004BP3–S45 Saved by HsCal2 Save date = 6/9/2014 6:25 p.m.

| AL MEMBER DEPTH | AL DOUBLE ANGLES | (N) ROWS | SST ADHESIVE ANCHORS | EMBEDMENT |
|---|---|---|---|---|
| 4", 5", 6" | 2-L6x4x3/8x0'-3" LONG | 1 | 2-5/8"ø SST ADHESIVE ANCHORS | 5", MIN |
| 8" | 2-L4x3 1/2x3/8x0'-9" | 2 | 4-5/8"ø SST ADHESIVE ANCHORS | 5", MIN |
| 10", 12", 15" | 2-L4x3 1/2x3/8x0'-9" | 3 | 4-3/4"ø SST ADHESIVE ANCHORS | 6 1/2", MIN |

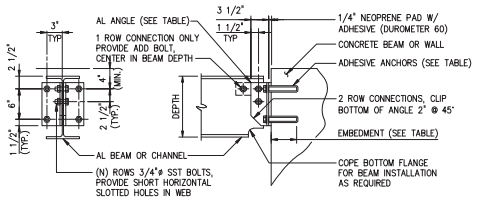


NOTE:
DURING INSTALLATION OF ADHESIVE ANCHORS BEAM TOP REINFORCEMENT SHALL NOT BE CUT. PRIOR TO FABRICATION FIELD LOCATE REINFORCEMENT AND LENGTHEN ANGLES AS REQUIRED LOWER ANCHORS TO CLEAR REINFORCEMENT.

ALUMINUM BEAM TO CONCRETE CONNECTION

**DETAIL** 37
NTS –

| AL MEMBER DEPTH | AL DOUBLE ANGLES | (N) ROWS |
|---|---|---|
| 4", 5", 6" | 2-L6x4x3/8x0'-3" LONG | 1 |
| 8" | 2-L4x4x5/16x0'-5 1/2" | 2 |
| 10", 12", 15" | 2-L4x4x5/16x0'-8" | 3 |

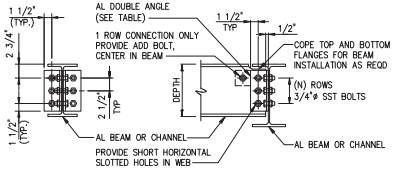


ALUMINUM FRAMING CONNECTION

**DETAIL** 38
NTS –

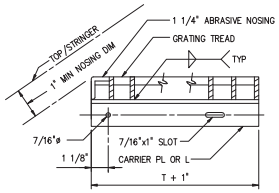


TYP TREAD DETAIL

**DETAIL** 39
NTS –

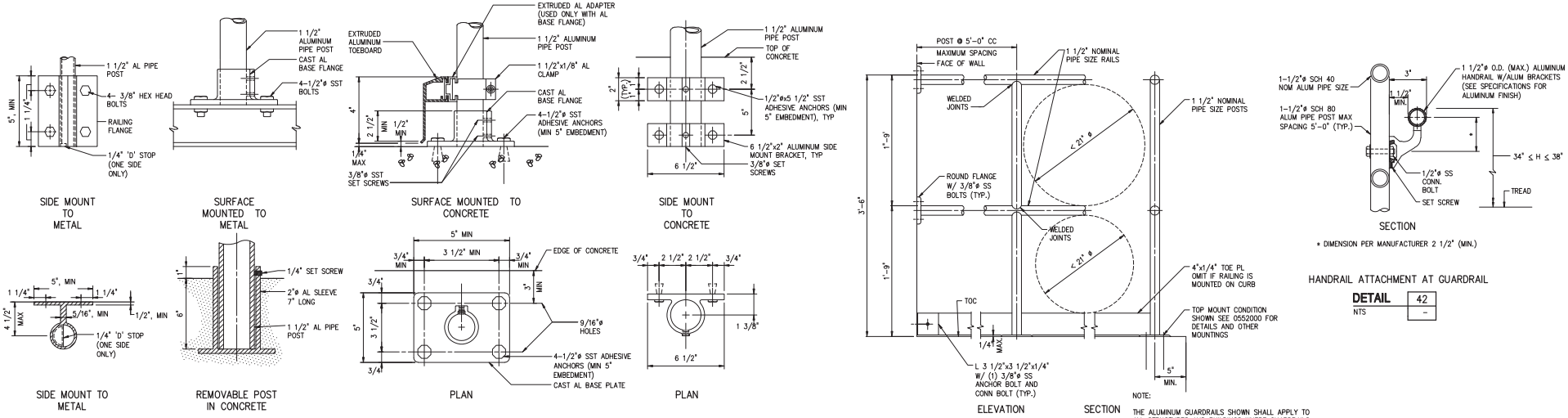


ALUMINUM HANDRAIL POST CONNECTIONS

**DETAIL** 40
NTS –




NOTE:
THE ALUMINUM GUARDRAILS SHOWN SHALL APPLY TO ALL STRUCTURES AND BUILDINGS WHERE GUARDRAILS ARE SHOWN, AND OR THAT ARE SPECIFICALLY CALLED OUT ON DRAWINGS

TYPICAL GUARDRAIL AT LANDINGS AND WALKWAYS

**DETAIL** 41
NTS –




* DIMENSION PER MANUFACTURER 2 1/2" (MIN.)

HANDRAIL ATTACHMENT AT GUARDRAIL

**DETAIL** 42
NTS –

| NO. | DATE | ISSUED FOR | BY |
|---|---|---|---|

DESIGNED J.P.S.
DRAWN C.C.P.
CHECKED A.F.H.
PROJ. ENGR. G.A.B.

JEAN PAUL SILVA P.E.
No. 66522

HAZEN AND SAWYER
Environmental Engineers & Scientists
4000 Hollywood Boulevard, Suite 750N
Hollywood, Florida 33021
Certificate of Authorization Number: 2771

SCALE NTS

CLIENTS PROJECT: –
ENGINEERS PROJECT: 44238-004
CAD REFERENCE: 44238-004BP3-S46

NORTH MIAMI FLORIDA
CITY OF NORTH MIAMI
PUBLIC WORKS UTILITIES

WINSON WATER TREATMENT PLANT
BID PACKAGE 3: WTP REHABILITATION
STRUCTURAL DETAILS SHEET 5

DATE: JUNE 2014
SHEET: 186 OF 335
DRAWING: S-46

PERMITTING

PLOT DATE: 6/10/2014 5:50 p.m. BY: HSCALI2
XREFs= ..\Tblock\44238-004-BP3-TB
File = H:\44238-004\Drawings\Bid Package 3 - WTP Rehab\Struct\44238-004BP3-S46 Saved by HScali1 Save date = 6/9/2014 6:51 p.m.

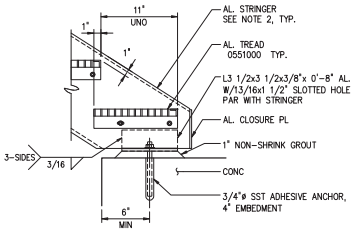


LOWER STRINGER CONNECTION TO CENCRETE SLAB

**DETAIL** 43
NTS –

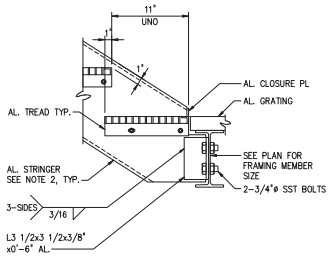


LOWER STRINGER CONNECTION TO FRAMING SLAB

**DETAIL** 44
NTS –

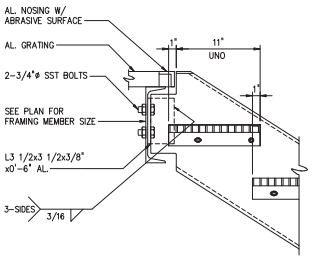


UPPER STRINGER CONNECTION TO FRAMING MEMBER

**DETAIL** 45
NTS –

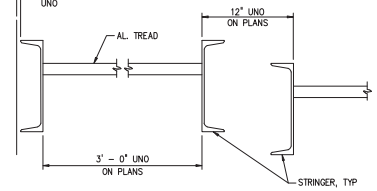


TYPICAL TREAD CROSS SECTION

**DETAIL** 46
NTS –

| SPAN, S | DEPTH (MIN) | CONCRETE ANCHOR (SIZE AND SPACING) |
|---|---|---|
| 0'-0"< S≤4'-0" | 1 1/2" | 1/2"øx5 1/2" @ 18" |
| 4'-0"< S≤5'-0" | 1 3/4" | 5/8"øx6" @ 18" |
| 5'-0"< S≤5'-6" | 2" | |
| 5'-6"< S≤6'-0" | 2 1/4" | |
| 6'-0"< S≤6'-6" | 2 1/2" | |

SCHEDULE BASED ON 150 PSF

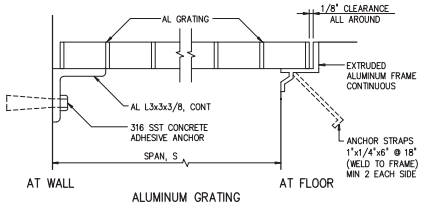


ALUMINUM GRATING

**DETAIL** 47
NTS –

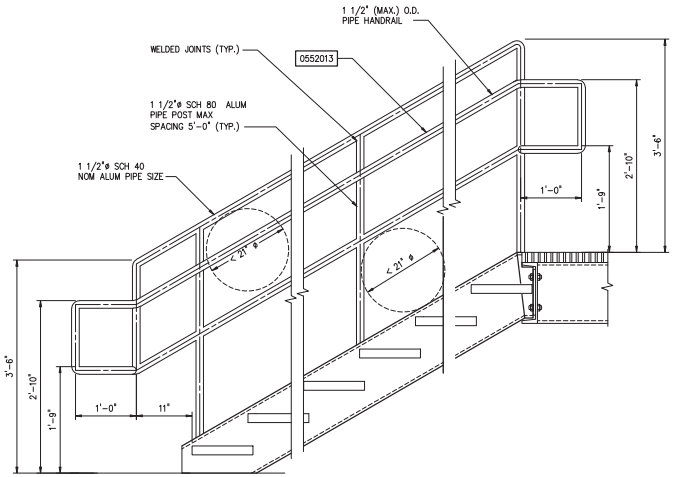


GUARDRAIL WITH HANDRAIL AT METAL STAIRS

**DETAIL** 48
NTS –

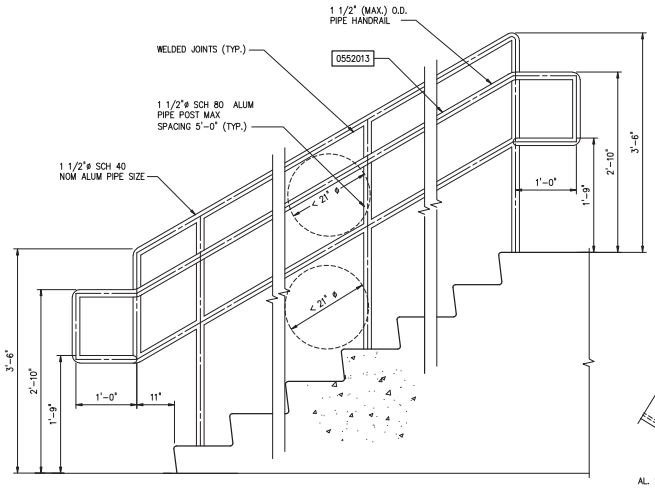


GUARDRAIL WITH HANDRAIL AT CONCRETE STAIRS

**DETAIL** 48A
NTS –

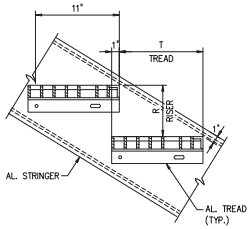


METAL STAIRS

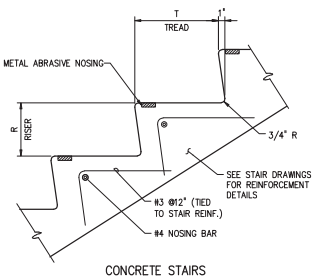


CONCRETE STAIRS

TYPICAL STAIR STEP ELEVATION

**DETAIL** 49
NTS –

| NO. | DATE | ISSUED FOR | BY |
|---|---|---|---|

DESIGNED J.P.S.
DRAWN C.C.P.
CHECKED A.F.H.
PROJ. ENGR. G.A.B.

JEAN PAUL SILVA P.E.
No. 66522

**HAZEN AND SAWYER**
Environmental Engineers & Scientists
4000 Hollywood Boulevard, Suite 750N
Hollywood, Florida 33021
Certificate of Authorization Number: 2771

SCALE NTS

CLIENTS PROJECT: –
ENGINEERS PROJECT: 44238-004
CAD REFERENCE: 44238-004BP3-S47

NORTH MIAMI FLORIDA
**CITY OF NORTH MIAMI**
**PUBLIC WORKS UTILITIES**

WINSON WATER TREATMENT PLANT
BID PACKAGE 3: WTP REHABILITATION
STRUCTURAL DETAILS SHEET 6

DATE: JUNE 2014
SHEET: 187 OF 335
DRAWING: S-47

PERMITTING

PLOT DATE: 6/10/2014 5:52 p.m. BY: HSCALI2
XREFs= ..\Tblock\44238-004-BP3-TB
File = H:\44238-004\Drawings\Bid Package 3 - WTP Rehab\Struct\44238-004BP3-S47 Saved by HScali1 Save date = 6/9/2014 5:10 p.m.

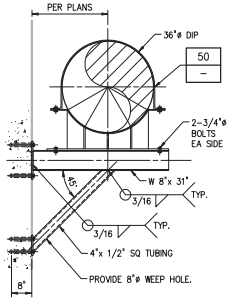


SECTION

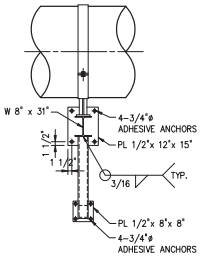


ELEVATION

**DETAIL** 49
NTS –

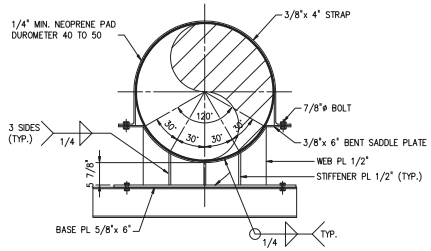


**DETAIL** 50
NTS –

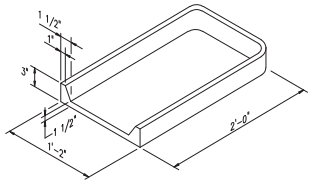


ELEVATION VIEW

NOTES:

1 REINFORCED W/16 GA. 1 1/2" HEX. WIRE MESH.

2 PRECAST PAD OF SIMILAR DESIGN MAY BE SUBSTITUTED WITH ENGINEERS APPROVAL.

TYPICAL SPLASH PAD

**DETAIL** 51
NTS –

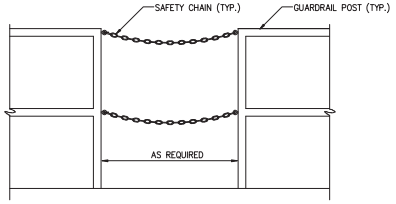


GUARDRAIL SAFETY CHAIN GATE ELEVATION

**DETAIL** 52
NTS –

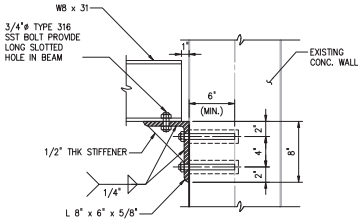


SIDE VIEW

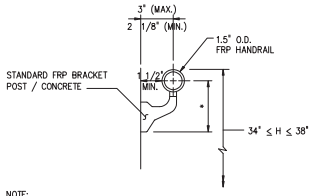


NOTE:

* DIMENSION PER MANUFACTURER 2 1/2" (MIN.)

SECTION A
– –

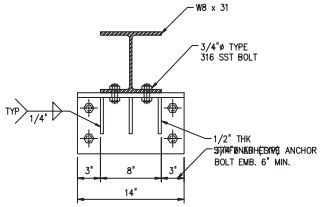


FRONT VIEW

**DETAIL** 53
NTS –

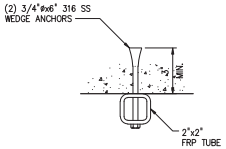


SECTION B
– –

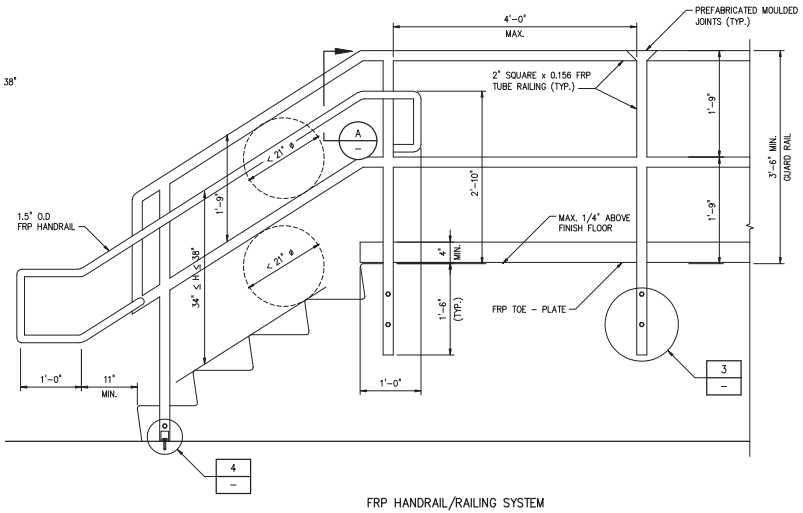


FRP HANDRAIL/RAILING SYSTEM

**DETAIL** 54
NTS –

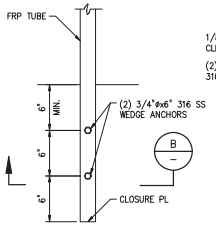


GUARDRAIL ATTACHMENT TO CONCRETE

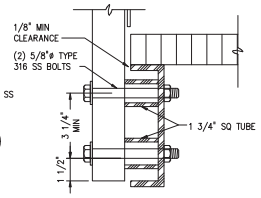


GUARDRAIL ATTACHMENT TO METAL OR FRP

DETAIL 3
– –

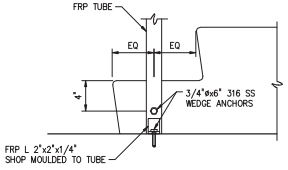


DETAIL 4
– –

| NO. | DATE | ISSUED FOR | BY |
|---|---|---|---|

DESIGNED J.P.S.
DRAWN C.C.P.
CHECKED A.F.H.
PROJ. ENGR. G.A.B.

JEAN PAUL SILVA P.E.
No. 66522

**HAZEN AND SAWYER**
Environmental Engineers & Scientists
4000 Hollywood Boulevard, Suite 750N
Hollywood, Florida 33021
Certificate of Authorization Number: 2771

SCALE NTS

CLIENTS PROJECT: –
ENGINEERS PROJECT: 44238-004
CAD REFERENCE: 44238-004BP3-S48

NORTH MIAMI FLORIDA
**CITY OF NORTH MIAMI**
**PUBLIC WORKS UTILITIES**

WINSON WATER TREATMENT PLANT
BID PACKAGE 3: WTP REHABILITATION
STRUCTURAL DETAILS SHEET 7

DATE: JUNE 2014
SHEET: 188 OF 335
DRAWING: S-48

PERMITTING

PLOT DATE: 6/10/2014 5:54 p.m. BY: HSCALI2

XREFs= ..\block\44238-004-BP3-TB

File = H:\44238-004\Drawings\Bid Package 3 - WTP Rehab\Struct\44238-004BP3-S48 Saved by HScalI1 Save date = 6/9/2014 6:44 p.m.

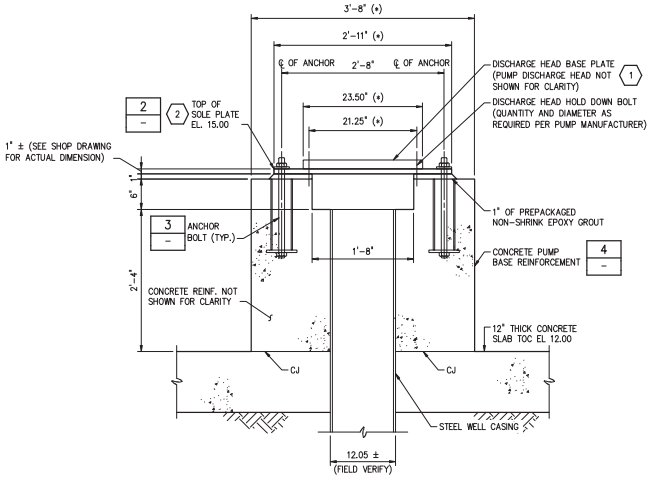


WELLHEAD SECTION

**DETAIL** 1 / S-49
1" = 1'-0"

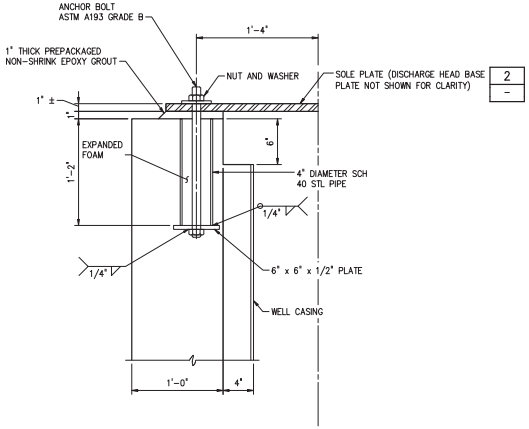


ANCHOR BOLT – SECTION

**DETAIL** 3 / S-49
1 1/2" = 1'-0"

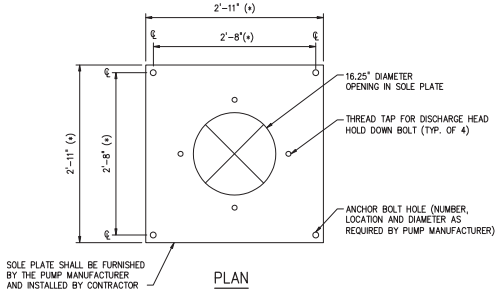


PLAN

SOLE PLATE

**DETAIL** 2 / S-49
1" = 1'-0"

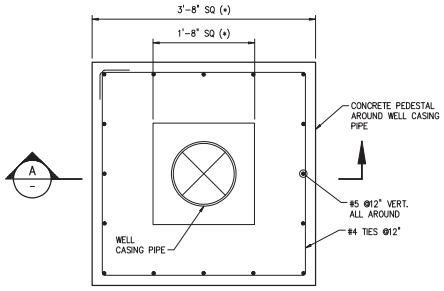


PLAN

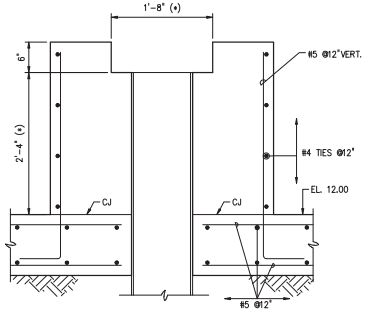


SECTION A

PUMP BASE REINFORCEMENT

**DETAIL** 4 / S-49
1" = 1'-0"

KEYED NOTES:

1. CONTACT AREA BETWEEN DISCHARGE HEAD BASE PLATE AND SOLE PLATE SHALL MACHINED PER THE PUMP MANUFACTURER'S REQUIREMENTS.
2. LEVEL SOLE PLATE TO MANUFACTURER'S RECOMMENDED TOLERANCE AS A MINIMUM.

1 1/2"=1'-0" 4" 0 1'
1"=1'-0" 12" 6 0 1'

| NO. | DATE | ISSUED FOR | BY |
|---|---|---|---|

DESIGNED J.P.S.
DRAWN L.M.S.
CHECKED A.F.H.
PROJ. ENGR. G.A.B.

JEAN PAUL SILVA P.E.
No. 66522

HAZEN AND SAWYER
Environmental Engineers & Scientists
4000 Hollywood Boulevard, Suite 750N
Hollywood, Florida 33021
Certificate of Authorization Number: 2771

SCALE: AS NOTED

CLIENTS PROJECT: –
ENGINEERS PROJECT: 44238-004
CAD REFERENCE: 44238-004BP3-S49

NORTH MIAMI FLORIDA
CITY OF NORTH MIAMI
PUBLIC WORKS UTILITIES

WINSON WATER TREATMENT PLANT
BID PACKAGE 3: WTP REHABILITATION
STRUCTURAL DETAILS SHEET 8

DATE: JUNE 2014
SHEET: 189 OF 335
DRAWING: S-49

PERMITTING

PLOT DATE: 6/10/2014 5:56 p.m. BY: HSCALI2
XREFs= ..\Block\44238-004-BP3-TB
File = H:\44238-004\Drawings\Bid Package 3 - WTP Rehab\Struct\44238-004BP3-S49 Saved by HScalI1 Save date = 6/9/2014 8:04 p.m.

## ROOM FINISH SCHEDULE

| NO. | DESCRIPTION | FLOOR SUBSTRATE | FLOOR FINISH | BASE SUBSTRATE | BASE FINISH | WALL-NORTH SUBSTRATE | WALL-NORTH FINISH | WALL-EAST SUBSTRATE | WALL-EAST FINISH | WALL-SOUTH SUBSTRATE | WALL-SOUTH FINISH | WALL-WEST SUBSTRATE | WALL-WEST FINISH | CEILING SUBSTRATE | CEILING FINISH | HEIGHT | REMARKS |
|---|---|---|---|---|---|---|---|---|---|---|---|---|---|---|---|---|---|
| NEW ADMINSTRATION BUILDING – FIRST FLOOR – SEE DRAWING A-03 | | | | | | | | | | | | | | | | | |
| 100 | MEN | CONC | CT | GWB-MR/TB | CT | GWB-MR/TB | PT | GWB-MR/TB | PT/CT | GWB-MR/TB | PT/CT | GWB-MR/TB | PT/CT | ACT/GWB-MR | MFR/PT | 10'-0" | NOTES 2,3 |
| 101 | JAN | CONC | CT | GWB-MR/TB | CT | CMU | PT | CMU | PT/CT | GWB-MR/TB | PT/CT | GWB-MR | PT | ACT | MFR | 10'-0" | NOTE 2 |
| 102 | CORRIDOR | CONC | VCT | GWB | RUB | GWB | PT | GWB | PT | GWB | PT | GWB | PT | ACT | MFR | 10'-0" | NOTE 1 |
| 103 | WOMEN | CONC | CT | GWB-MR/TB | CT | GWB-MR/TB | PT/CT | GWB-MR/TB | PT/CT | GWB-MR/TB | PT/CT | GWB-MR/TB | PT/CT | ACT/GWB-MR | MFR/PT | 10'-0" | NOTES 2,3 |
| 104 | STAIR 1 | CONC | RUB | CMU | RUB | CMU | PT | CMU | PT | CMU | PT | CMU | PT | EXP | -- | 27'-4" | NOTE 4 |
| 105 | ELEV MACHINE | CONC | VCT | CMU | RUB | CMU | PT | CMU | PT | CMU | PT | CMU | PT | EXP | -- | 13'-4" | |
| 106 | LOBBY | CONC | VCT | GWB | RUB | GWB | PT | GWB | PT | GWB | PT | GWB | PT | ACT | MFR | 10'-0" | |
| 107 | VESTIBULE | CONC | VCT | GWB | RUB | GWB | PT | GWB | PT | GWB | PT | GWB | PT | ACT | MFR | 10'-0" | |
| 108 | EOC OFFICE | CONC | VCT | GWB | RUB | GWB | PT | GWB | PT | GWB | PT | GWB | PT | ACT | MFR | 10'-0" | |
| 109 | CONF/EOC ROOM | CONC | VCT | GWB | RUB | GWB | PT | GWB | PT | GWB | PT | GWB | PT | ACT | MFR | 10'-0" | |
| 110 | CLOSET | CONC | VCT | GWB | RUB | GWB | PT | GWB | PT | GWB | PT | GWB | PT | GWB | PT | VARIES | |
| 111 | STAIR 2 | CONC | RUB | CMU | RUB | CMU | PT | CMU | PT | GWB/CMU | PT | CMU | PT | EXP | PT | 27'-4" | NOTE 4 |
| 112 | MECH/ELEC ROOM | CONC | SEALER | CMU | PT | CMU | PT | CMU | PT | CMU | PT | CMU | PT | EXP | -- | 12'-0" | |
| 113 | ELEV | CONC | -- | CMU | -- | CMU | -- | CMU | -- | CMU | -- | CMU | -- | EXP | -- | 27'-4" | |
| NEW ADMINSTRATION BUILDING – SECOND FLOOR – SEE DRAWING A-04 | | | | | | | | | | | | | | | | | |
| 200 | BREAK ROOM | CONC | VCT | GWB | RUB | GWB | PT | GWB | PT | GWB | PT | GWB | PT | ACT | MFR | 10'-0" | |
| 201 | OFFICE | CONC | VCT | GWB | RUB | GWB | PT | GWB | PT | GWB | PT | GWB | PT | ACT | MFR | 10'-0" | |
| 202 | CLOSET | CONC | VCT | GWB | RUB | GWB | PT | GWB | PT | GWB | PT | GWB | PT | ACT | MFR | 10'-0" | |
| 203 | LAB | CONC | VCT | GWB | RUB | GWB | PT | GWB | PT | GWB | PT | GWB | PT | ACT | MFR | 10'-0" | |
| 204 | CORRIDOR | CONC | VCT | GWB | RUB | GWB | PT | GWB | PT | GWB | PT | GWB | PT | ACT | MFR | 10'-0" | |
| 205 | WOMEN | CONC | CT | GWB | CT | GWB/TB | PT/CT | GWB/TB | PT/CT | GWB | PT | GWB/TB | PT/CT | ACT | MFR | 10'-0" | NOTES 2 & 3 |
| 206 | MEN | CONC | CT | GWB | CT | GWB | PT | GWB/TB | PT/CT | GWB/TB | PT/CT | GWB/TB | PT/CT | ACT | MFR | 10'-0" | NOTES 2 & 3 |
| 207 | CLOSET | CONC | VCT | GWB | RUB | CMU | PT | GWB | PT | GWB | PT | GWB | PT | ACT | MFR | 10'-0" | |
| 208 | OFFICE | CONC | VCT | GWB | RUB | GWB | PT | GWB | PT | GWB | PT | GWB | PT | ACT | MFR | 10'-0" | NOTE 1 |
| 209 | OFFICE | CONC | VCT | GWB | RUB | GWB | PT | GWB | PT | GWB | PT | GWB | PT | ACT | MFR | 10'-0" | NOTE 1 |
| 210 | CONTROL ROOM | CONC | VCT | GWB | RUB | GWB | PT | GWB | PT | GWB | PT | GWB | PT | ACT | MFR | 10'-0" | |

### FINISH LEGEND

| | | | |
|---|---|---|---|
| ACT | ACOUSTICAL CEILING TILE | GWB-MR | GYPSUM WALLBOARD-MOISTURE RESISTANT |
| CMU | CONCRETE MASONRY UNIT | MFR | MANUFACTURER'S SPECIFIED FINISH |
| CONC | CONCRETE | PT | PAINT |
| CT | CERAMIC TILE | RUB | RUBBER |
| EXP | EXPOSED STRUCTURE | TB | TILE BACKER BOARD |
| GWB | GYPSUM WALLBOARD | VCT | VINYL COMPOSITION TILE |

### ROOM FINISH SCHEDULE NOTES

1. PAINTED GWB CEILING AT 10'-0" IN ALCOVE. WALLS & FLOORING SHALL EXTEND INTO CLOSET.
2. CERAMIC TILE FULL HT AT SHOWER, AND AS SHOWN ON DWG A-13. PROVIDE TILE BACKER BOARD BEHIND CT. PAINT WALL ABOVE CERAMIC TILE.
3. GWB-MR CEILING @ 8'-0" AT SHOWER.
4. FLOOR, LANDING, TREADS AND RISERS TO BE COVERED WITH RUBBER RESILIENT FLOORING. PAINT OTHER EXPOSED CONCRETE AND STEEL.

## DOOR SCHEDULE

| NO. | FRAME TYPE | FRAME MATL | DOOR TYPE | DOOR MATL | WIDTH | HEIGHT | THICKNESS | DETAILS HEAD | DETAILS JAMB | DETAILS SILL | GLAZING | LOUVER | FIRE LABEL | FINISH | HDWR NO | THRSHLD | WIND PRESSURE NEG. | WIND PRESSURE POS. | REMARKS |
|---|---|---|---|---|---|---|---|---|---|---|---|---|---|---|---|---|---|---|---|
| NEW ADMINSTRATION BUILDING – FIRST FLOOR – SEE DRAWING A-03 | | | | | | | | | | | | | | | | | | | |
| 100 | F-1 | HM | A | WD | 3'-0" | 7'-10" | 1 3/4" | 4/A-22 | 4/A-22 | 4/A-22 | -- | -- | -- | MFR | 5 | MARBLE | -- | -- | NOTE 2 |
| 101 | F-1 | HM | A | WD | 3'-0" | 7'-10" | 1 3/4" | 4/A-22 | 4/A-22 | 4/A-22 | -- | -- | -- | MFR | 7 | MARBLE | -- | -- | NOTE 2 |
| 102 | F-1 | HM | C | HM | 3'-0" | 7'-10" | 1 3/4" | 1/A-22 | 1/A-22 | 1/A-22 | IG | -- | -- | PT | 1 | AL | 68 PSF | 63 PSF | |
| 102A | F-2 | HM | A | HM | 2'-6" | 2'-6" | 1 3/4" | 1/A-22 | 1/A-22 | 1/A-22 | -- | -- | -- | PT | 7 | -- | 72 PSF | 66 PSF | NOTE 1 |
| 103 | F-1 | HM | A | WD | 3'-0" | 7'-10" | 1 3/4" | 4/A-22 | 4/A-22 | 4/A-22 | -- | -- | -- | MFR | 5 | MARBLE | -- | -- | NOTE 2 |
| 104 | F-1 | HM | B | HM | 3'-0" | 7'-10" | 1 3/4" | 1/A-22 | 1/A-22 | 1/A-22 | FG | -- | 45 MIN | PT | 1 | AL | 68 PSF | 63 PSF | |
| 104A | F-1 | HM | B | WD | 3'-0" | 7'-10" | 1 3/4" | 3/A-22 | 3/A-22 | 3/A-22 | FG | -- | 45 MIN | MFR | 9 | -- | -- | -- | NOTE 2 |
| 105 | F-1 | HM | A | WD | 3'-6" | 7'-10" | 1 3/4" | 1/A-22 | 1/A-22 | 1/A-22 | -- | -- | 45 MIN | MFR | 7 | REDUCER | -- | -- | NOTE 2 |
| 107 | F-1 | AL | D | AL | (2) 2'-10" | 7'-10" | 1 3/4" | 1/A-22 | 1/A-22 | 1/A-22 | IG | -- | -- | MFR | 2 | AL | 66 PSF | 60 PSF | |
| 107A | SF-1 | AL | D | AL | (2) 3'-0" | 7'-10" | 1 3/4" | 5/A-22 | 5/A-22 | 5/A-22 | TG | -- | -- | MFR | 10 | -- | -- | -- | |
| 108 | SF-2 | AL | C | WD | 3'-0" | 7'-10" | 1 3/4" | 5/A-22 | 5/A-22 | 5/A-22 | TG | -- | -- | MFR | 6 | -- | -- | -- | NOTE 2 |
| 108A | MFR | HM | F | WD | (2) 3'-0" | 7'-10" | 1 3/4" | 6/A-22 | 6/A-22 | 6/A-22 | -- | -- | -- | MFR | 11 | -- | -- | -- | NOTES 2, 3 |
| 109 | F-1 | HM | B | WD | 3'-0" | 7'-10" | 1 3/4" | 4/A-22 | 4/A-22 | 4/A-22 | TG | -- | -- | MFR | 1 | -- | -- | -- | NOTE 2 |
| 109A | F-1 | HM | B | WD | 3'-0" | 7'-10" | 1 3/4" | 4/A-22 | 4/A-22 | 4/A-22 | TG | -- | -- | MFR | 1 | -- | -- | -- | NOTE 2 |
| 110 | MFR | HM | F | WD | (2) 4'-0" | 7'-10" | 1 3/4" | 6/A-22 | 6/A-22 | 6/A-22 | -- | -- | -- | MFR | 11 | -- | -- | -- | NOTE 2 |
| 111 | F-1 | HM | B | WD | 3'-0" | 7'-10" | 1 3/4" | 4/A-22 | 4/A-22 | 4/A-22 | TG | -- | 45 MIN | MFR | 9 | -- | -- | -- | NOTE 2 |
| 112 | F-1 | HM | A | HM | 3'-0" | 7'-10" | 1 3/4" | 1/A-22 | 1/A-22 | 1/A-22 | -- | -- | 90 MIN | PT | 1 | AL | 68 PSF | 63 PSF | |
| 112A | F-1 | HM | A | HM | (2) 2'-10" | 9'-2" | 1 3/4" | 2/A-22 | 2/A-22 | 2/A-22 | -- | -- | 90 MIN | PT | 2 | AL | 65 PSF | 59 PSF | |

## DOOR SCHEDULE

| NO. | FRAME TYPE | FRAME MATL | DOOR TYPE | DOOR MATL | WIDTH | HEIGHT | THICKNESS | DETAILS HEAD | DETAILS JAMB | DETAILS SILL | GLAZING | LOUVER | FIRE LABEL | FINISH | HDWR NO | THRSHLD | WIND PRESSURE NEG. | WIND PRESSURE POS. | REMARKS |
|---|---|---|---|---|---|---|---|---|---|---|---|---|---|---|---|---|---|---|---|
| NEW ADMINSTRATION BUILDING – SECOND FLOOR – SEE DRAWING A-04 | | | | | | | | | | | | | | | | | | | |
| 104B | F-1 | HM | B | WD | 3'-0" | 7'-10" | 1 3/4" | 3/A-22 | 3/A-22 | 3/A-22 | FG | -- | 45 MIN | MFR | 9 | -- | -- | -- | NOTE 2 |
| 111A | F-1 | HM | C | HM | 3'-0" | 7'-10" | 1 3/4" | 1/A-22 | 1/A-22 | 1/A-22 | IG | -- | -- | PT | 3 | AL | 68 PSF | 63 PSF | NOTE 2 |
| 200 | F-1 | HM | C | WD | 3'-0" | 7'-10" | 1 3/4" | 4/A-22 | 4/A-22 | 4/A-22 | TG | -- | -- | MFR | 5 | -- | -- | -- | NOTE 2 |
| 201 | F-1 | HM | B | WD | 3'-0" | 7'-10" | 1 3/4" | 4/A-22 | 4/A-22 | 4/A-22 | TG | -- | -- | MFR | 6 | -- | -- | -- | NOTE 2 |
| 202 | F-1 | HM | A | WD | 3'-0" | 7'-10" | 1 3/4" | 4/A-22 | 4/A-22 | 4/A-22 | -- | -- | -- | MFR | 5 | -- | -- | -- | NOTE 2 |
| 203 | F-3 | HM | D | WD | 3'-0" | 7'-10" | 1 3/4" | 4/A-22 | 4/A-22 | 4/A-22 | TG | -- | -- | MFR | 5 | -- | -- | -- | DOOR WITH SIDELIGHT, NOTE 2 |
| 204 | F-1 | HM | C | HM | 3'-0" | 7'-10" | 1 3/4" | 1/A-22 | 1/A-22 | 1/A-22 | IC | -- | -- | PT | 1 | AL | 68 PSF | 63 PSF | |
| 205 | F-1 | HM | A | WD | 3'-0" | 7'-10" | 1 3/4" | 4/A-22 | 4/A-22 | 4/A-22 | -- | -- | -- | MFR | 8 | MARBLE | -- | -- | NOTE 2 |
| 206 | F-1 | HM | A | WD | 3'-0" | 7'-10" | 1 3/4" | 4/A-22 | 4/A-22 | 4/A-22 | -- | -- | -- | MFR | 8 | MARBLE | -- | -- | NOTE 2 |
| 207 | F-1 | HM | A | WD | 3'-0" | 7'-10" | 1 3/4" | 4/A-22 | 4/A-22 | 4/A-22 | -- | -- | -- | MFR | 7 | -- | -- | -- | NOTE 2 |
| 208 | F-1 | HM | B | WD | 3'-0" | 7'-10" | 1 3/4" | 4/A-22 | 4/A-22 | 4/A-22 | TG | -- | -- | MFR | 6 | -- | -- | -- | NOTE 2 |
| 208A | MFR | HM | F | WD | (2) 3'-0" | 7'-10" | 1 3/4" | 6/A-22 | 6/A-22 | 6/A-22 | -- | -- | -- | MFR | 11 | -- | -- | -- | BI-FOLD DOORS, NOTE 2 |
| 209 | F-1 | HM | B | WD | 3'-0" | 7'-10" | 1 3/4" | 4/A-22 | 4/A-22 | 4/A-22 | TG | -- | -- | MFR | 6 | -- | -- | -- | NOTE 2 |
| 209A | MFR | HM | F | WD | 3'-8" | 7'-10" | 1 3/4" | 6/A-22 | 6/A-22 | 6/A-22 | -- | -- | -- | MFR | 11 | -- | -- | -- | BI-FOLD DOOR, NOTE 2 |
| 210 | F-1 | HM | C | HM | 3'-0" | 7'-10" | 1 3/4" | 1/A-22 | 1/A-22 | 1/A-22 | IG | -- | -- | PT | 3 | AL | 68 PSF | 63 PSF | |
| 210A | F-1 | HM | A | WD | 3'-0" | 7'-10" | 1 3/4" | 4/A-22 | 4/A-22 | 4/A-22 | -- | -- | -- | MFR | 5 | -- | -- | -- | NOTE 2 |

### DOOR LEGEND

| | | | |
|---|---|---|---|
| AL | ALUMINUM | PT | PAINT |
| FG | FIRE RATED GLASS | STL | STEEL |
| HM | HOLLOW METAL | TG | TEMPERED GLASS |
| IG | INSULATING GLASS | WD | WOOD |
| MFR | MANUFACTURER'S STANDARD | | |

### DOOR SCHEDULE NOTES

1. FIRE ACCESS DOOR W/ SIGN "NO STORAGE".
2. PAINT HM FRAME IN FIELD, STAIN WD DOORS IN FACTORY.
3. CENTER DOOR IN CLOSET WALL.

## WINDOW SCHEDULE

| TYPE | FRAME MATERIAL | WIDTH | HEIGHT | DETAILS HEAD | DETAILS JAMB | DETAILS SILL | GLAZING | WINDOW TREATMENT | WIND PRESSURE NEG. | WIND PRESSURE POS. | REMARKS |
|---|---|---|---|---|---|---|---|---|---|---|---|
| NEW ADMINSTRATION BUILDING – SEE DRAWINGS A-08 & A-09 | | | | | | | | | | | |
| W-1 | MFR | 3'-4" | 5'-4" | 7/A-22 | 7/A-22 | 7/A-22 | IG | -- | 69 PSF | 64 PSF | |
| W-2 | MFR | 4'-0" | 5'-4" | 7/A-22 | 7/A-22 | 7/A-22 | IG | -- | 69 PSF | 63 PSF | |
| W-3 | MFR | 2'-0" | 5'-4" | 7/A-22 | 7/A-22 | 7/A-22 | IG | -- | 71 PSF | 66 PSF | |
| W-4 | MFR | 5'-4" | 4'-4" | 7/A-22 | 7/A-22 | 7/A-22 | IG | -- | 68 PSF | 63 PSF | |
| W-5 | MFR | 4'-4" | 5'-4" | 7/A-22 | 7/A-22 | 7/A-22 | IG | -- | 63 PSF | 63 PSF | |
| W-6 | MFR | 4'-0" | 6'-0" | 7/A-22 | 7/A-22 | 7/A-22 | IG | -- | 68 PSF | 63 PSF | |
| W-7 | MFR | 4'-8" | 5'-4" | 7/A-22 | 7/A-22 | 7/A-22 | IG | -- | 68 PSF | 62 PSF | |
| W-8 | MFR | 5'-4" | 4'-8" | 7/A-22 | 7/A-22 | 7/A-22 | IG | -- | 68 PSF | 62 PSF | |

### WINDOW LEGEND

| | |
|---|---|
| AL | ALUMINUM |
| IG | INSULATED GLASS |
| MFR | MANUFACTURER |

### WINDOW NOTES

### WINDOW TYPES 1/4" = 1'-0"

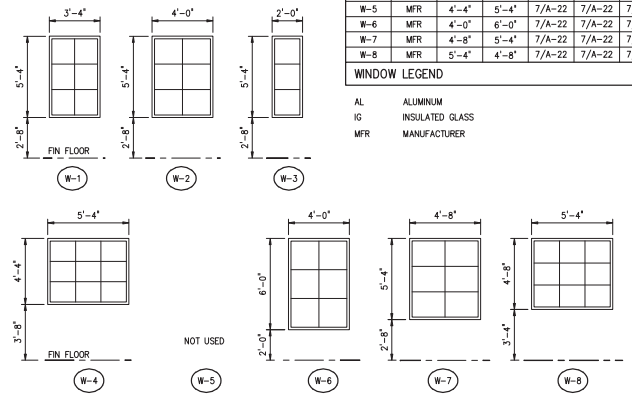


### STOREFRONT FRAME TYPES 1/4" = 1'-0"

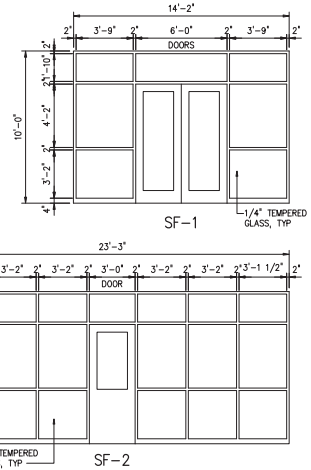


### FRAME TYPES 1/4" = 1'-0"

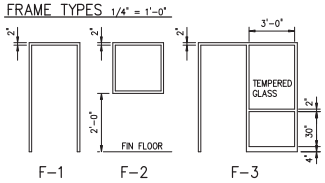


### DOOR TYPES 1/4" = 1'-0"

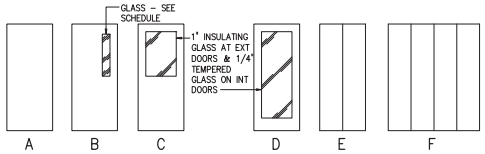


### FRAME PROFILES 3" = 1'-0"

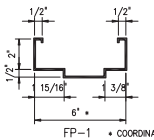


FP-1 * COORDINATE W/ WALL THICKNESS

### THRESHOLD TYPES 3" = 1'-0"

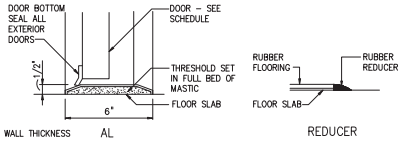


AL REDUCER

| NO. | DATE | ISSUED FOR | BY |
|---|---|---|---|
| 1 | 4/1/14 | 100% QA COMMENTS | H.J.V. |

DESIGNED W.H.R.
DRAWN A.L.B.
CHECKED W.H.R.
PROJ. ENGR. G.A.B.

DEAN AVERY WALDROP R.A.
No. 93380

HAZEN AND SAWYER
Environmental Engineers & Scientists
4000 Hollywood Boulevard, Suite 750N
Hollywood, Florida 33021
Certificate of Authorization Number: 2771

SCALE –

CLIENTS PROJECT: –
ENGINEERS PROJECT: 44238-004
CAD REFERENCE: 44238-004BP3-A01

NORTH MIAMI FLORIDA
CITY OF NORTH MIAMI
PUBLIC WORKS UTILITIES

WINSON WATER TREATMENT PLANT
BID PACKAGE 3: WTP REHABILITATION
NEW ADMINISTRATION BUILDING SCHEDULES

DATE: JUNE 2014
SHEET: 190 OF 335
DRAWING: A-01

PERMITTING

PLOT DATE: 6/10/2014 9:36 AM BY: HSCALIT

XREFs= ..\Tblock\44238-004-BP3-TB,..\Base-BP3\A-BP3-Admin-Elev,..\Arch Details\Storefront Glazing

File = H:\44238-004\Drawings\Bid Package 3 - WTP Rehab\Arch\44238-004BP3-A01 Saved by HsCalI2 Save date = 6/9/2014 5:44 PM

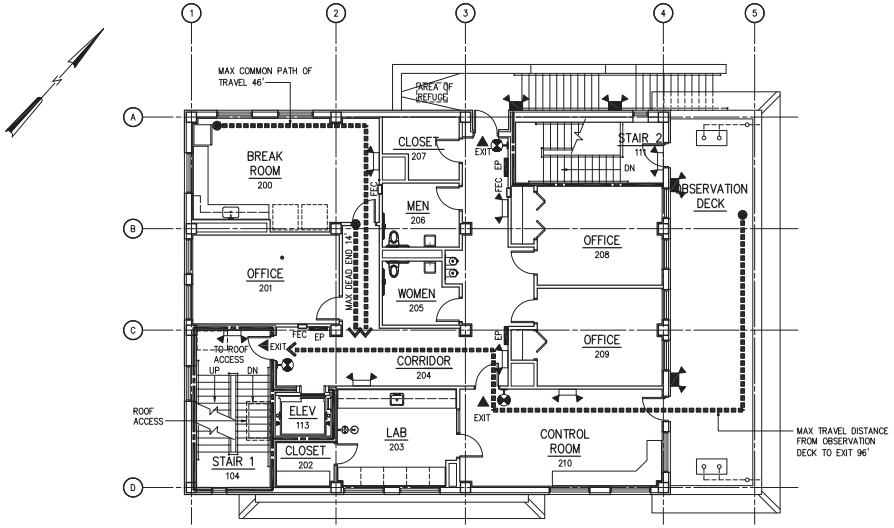


SECOND FLOOR LIFE SAFETY PLAN
1/8" = 1'-0"

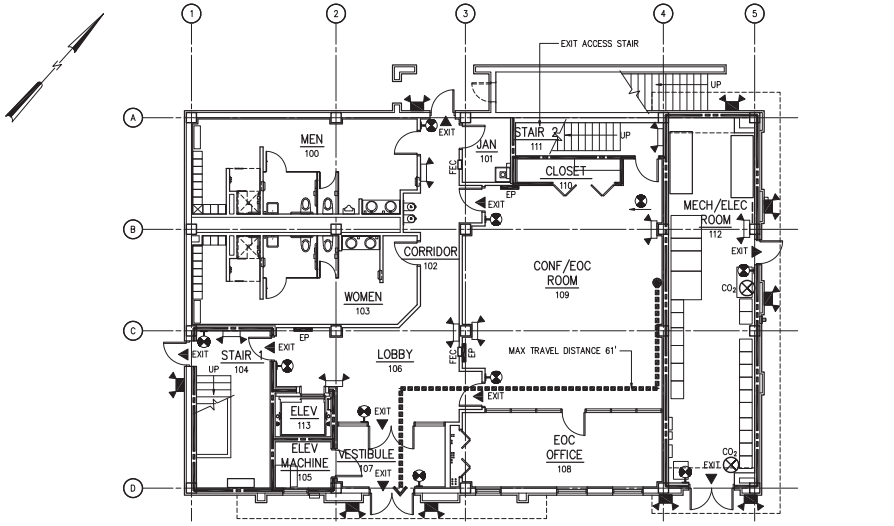


FIRST FLOOR LIFE SAFETY PLAN
1/8" = 1'-0"

## LIFE SAFETY ANALYSIS

APPLICABLE CODES:

2010 FLORIDA BUILDING CODE: FUEL GAS (FIRST PRINTING)
2010 FLORIDA BUILDING CODE: MECHANICAL (FIRST PRINTING)
2010 FLORIDA BUILDING CODE: TEST PROTOCOLS (FIRST PRINTING)
2010 FLORIDA BUILDING CODE: ENERGY CONSERVATION (FIRST PRINTING)
2010 FLORIDA BUILDING CODE: ACCESSIBILITY (FIRST PRINTING)
2010 FLORIDA BUILDING CODE: BUILDING (FIRST PRINTING)
2010 FLORIDA BUILDING CODE: EXISTING BUILDING (FIRST PRINTING)
2010 FLORIDA BUILDING CODE: PLUMBING (FIRST PRINTING)
NFPA 101: 2009 EDITION
NATIONAL ELECTRIC CODE, 2008 EDITION

OCCUPANCY CLASSIFICATION:

GROUP B, BUSINESS

CONSTRUCTION TYPE:

TYPE II–B
UNPROTECTED (UNSPRINKLERED) (PER FBC 602.2)
MAXIMUM NUMBER OF STORIES = 3 (PER FBC TABLE 503)
ACTUAL NUMBER OF STORIES = 2
MAXIMUM AREA (PER FLOOR) = 23,000 SF (PER FBC TABLE 503)
ACTUAL AREA = 1ST FLOOR 3830 SF < 23,000 SF
ACTUAL AREA = 2ND FLOOR 3830 SF < 23,000 SF
MAXIMUM BUILDING HEIGHT =55' (PER FBC TABLE 503)
ACTUAL BUILDING HEIGHT = 31'< 55'

OCCUPANT LOAD:

TOTAL OCCUPANT LOAD = 83 FIRST FLOOR
= 69 SECOND FLOOR
FIRST FLOOR CONFERENCE – 780/15 = 52
FIRST FLOOR BUSINESS – 3050/100 = 31
SECOND FLOOR BUSINESS – 3165/100 = 32
SECOND FLOOR OBSERVATION DECK – 600/15 = 40

EGRESS CAPACITY:

EGRESS CAPACITY EXCEEDS OCCUPANT LOAD.

0.2 INCHES PER OCCUPANT (FBC TABLE 1005.1) AT DOORS

0.3 INCHES PER OCCUPANT (FBC TABLE 1005.1) AT STAIRS

MINIMUM CORRIDOR WIDTH = 44 INCHES (FBC 1016.2)

MINIMUM STAIR WIDTH = 44 INCHES (FBC 1009.1)

MINIMUM CLEAR OPENING OF EXIT DOORS = 32 INCHES (FBC 1008.1.1)
1.) STAIRWAYS
69 OCCUPANTS x 0.3 = 20.7" < 44"
2.) OTHER COMPONENTS
BUILDING – 84 OCCUPANTS x 0.2 = 16.8" < 36"

EGRESS NOTE:

EGRESS FROM THE SECOND FLOOR BY STAIR 1 AND EXTERIOR STAIR. STAIR 2 IS CONVENIENCE STAIR TO PROVIDE ACCESS TO OBSERVATION DECK.

EXIT ACCESS TRAVEL DISTANCE:

BUSINESS GROUP "B" WITHOUT SPRINKLER SYSTEM
MAXIMUM TRAVEL DISTANCE TO EXIT = 200 FT. (PER FBC TABLE 1016.1)

EXIT ACCESS COMMON PATH OF TRAVEL:

BUSINESS GROUP "B" WITHOUT SPRINKLER SYSTEM
COMMON PATH OF TRAVEL = 75 FT. (PER FBC 1014.3)

EXIT ACCESS DEAD END CORRIDORS:

BUSINESS GROUP "B" WITHOUT SPRINKLER SYSTEM
20' MAXIMUM LENGTH (FBC 1018.4)

OBSERVATION DECK – OUTSIDE AREA (1004.8)

AREA – 600 SQUARE FEET
MAXIMUM OCCUPANT LOAD – 84
EXIT THROUGH INTERVENING SPACES (1014.2)
MAXIMUM TRAVEL DISTANCE – 96 FT

FIRE PROTECTION REQUIREMENTS:

| | |
|---|---|
| (PER FBC, 2010, TABLE 601) | "0 HRS" |
| STRUCTURAL FRAME | "0 HRS" |
| BEARING WALLS (INT) | "0 HRS" |
| (EXT) | "0 HRS" |
| EXTERIOR WALLS > 10 FEET | |
| NON–BEARING WALLS (INT) | "0 HR" |
| FLOOR CONSTRUCTION | "0 HR" |
| ROOF CONSTRUCTION | "0 HR" |

ORDINARY HAZARD FIRE EXTINGUISHER REQUIREMENTS:

GROUP "B" BLDG. (BUSINESS) (CLASS A) PER FPC SECTION 3.3.102.3)
FLORIDA FIRE PROTECTION CODE (BASED ON NFPA 1, FIRE CODE, 2009 EDITION AND NFPA 101, LIFE SAFETY CODE, 2009 EDITION)

FIRE EXTINGUISHER: 40A:60BC – DRY CHEMICAL DESIGN CRITERIA:
FLOOR AREA = 1500 – TRAVEL DISTANCE = 75 FT.

## LIFE SAFETY LEGEND

| | | | |
|---|---|---|---|
| ▲ | ENTRANCE/EXIT | | 1–HOUR FIRE RATED CMU WALL |
| | DIRECTION OF TRAVEL | | 2–HOUR FIRE RATED CMU WALL |
| ● | MOST REMOTE POINT | | EXIT SIGN |
| FEC | FIRE EXTINGUISHER CABINET | | EXIT SIGN WALLMOUNT |
| | EMERGENCY LIGHT FIXTURE | EP | EVACUATION PLAN SIGN |
| | DECORATIVE EMERGENCY LIGHT FIXTURE | | |
| FE | FIRE EXTINGUISHER – DRY CHEMICAL | | |
| $CO_2$ | FIRE EXTINGUISHER – CARBON DIOXIDE | | |

| NO. | DATE | ISSUED FOR | BY |
|---|---|---|---|
| 1 | 4/1/14 | 100% QA COMMENTS | H.J.V. |

PLOT DATE: 6/10/2014 9:27 AM BY: HSCALIT

DESIGNED W.H.R.
DRAWN A.L.B.
CHECKED W.H.R.
PROJ. ENGR. G.A.B.

DEAN AVERY WALDROP R.A.
No. 93380

HAZEN AND SAWYER
Environmental Engineers & Scientists
4000 Hollywood Boulevard, Suite 750N
Hollywood, Florida 33021
Certificate of Authorization Number: 2771

SCALE –

CLIENTS PROJECT: –
ENGINEERS PROJECT: 44238–004
CAD REFERENCE: 44238–004BP3–A02

NORTH MIAMI FLORIDA
CITY OF NORTH MIAMI
PUBLIC WORKS UTILITIES

WINSON WATER TREATMENT PLANT
BID PACKAGE 3: WTP REHABILITATION
NEW ADMINISTRATION BUILDING
LIFE SAFETY PLANS

DATE: JUNE 2014
SHEET: 191 OF 335
DRAWING: A–02

PERMITTING

XREFs= ..\Tblock\44238–004–BP3–TB,..\Base–BP3\A–BP3–Admin–Plan–Bottom,..\Base–BP3\A–BP3–Admin–Plan–Top,..\Base–BP3\A–BP3–Admin–Plan–Col–Grid,..\Base–BP3\E–BP3–Admin–Plan–Bottom

File = H:\44238–004\Drawings\Bid Package 3 – WTP Rehab\Arch\44238–004BP3–A02 Saved by HsCal2 Save date = 6/9/2014 8:26 PM

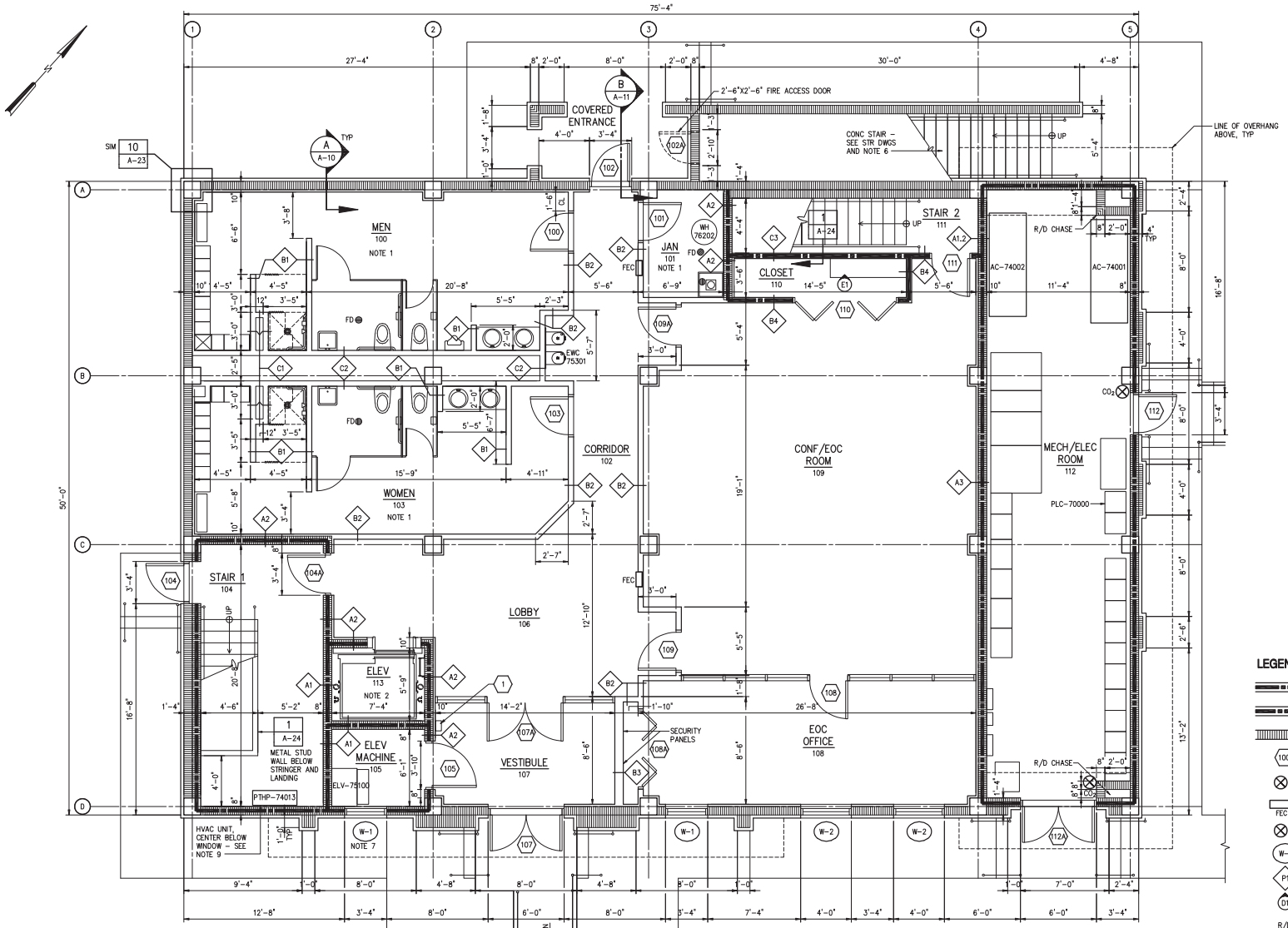


FIRST FLOOR PLAN
1/4" = 1'-0"

## NOTES:

1. SEE DRAWING A-13 FOR ENLARGED TOILET PLAN.
2. SEE DRAWING A-24 FOR ENLARGED ELEVATOR PLAN
3. SEE DRAWING A-15 FOR FURNITURE PLAN.
4. DIMENSIONS ARE TO FACE OF STUD OR NOMINAL FACE OF MASONRY.
5. CLEAR (CL) DIMENSIONS ARE MINIMUM DIMENSION FROM FACE OF FINISH TO FACE OF FINISH.
6. SURFACE OF CONCRETE STAIR (TREAD, RISER AND LANDING) SHALL RECEIVE SLIP RESISTANT COATING.
7. SEE DETAIL 7/A-22 (SIM).
8. ALL WALLS OF LOBBY, CORRIDOR AND VESTIBULE SHALL BE FULL HEIGHT, WITH 5/8" GYP BD TO UNDERSIDE OF FLOOR SLAB ABOVE.
9. COORDINATE MASONRY OPENING WITH HVAC UNIT. PROVIDE MASONRY LINTEL WITH (2) #5 BARS, EXTEND 8" BEYOND OPENING EA SIDE.

## KEYED NOTES:

1. WALL MOUNTED SECURE KEY BOX TO HOLD KEY FOR ELEVATOR MACHINE ROOM . KEY BOX SHALL BE SUPRA MAX BY UNITED TECHNOLOGIES CORPORATION, OR EQUAL.

## LEGEND:

- 1-HR FIRE RATED PARTITION – SEE DRAWING NO. A-24
- 2-HR FIRE RATED PARTITION – SEE DRAWING NO. A-24
- CONCRETE MASONRY
- 100 DOOR NUMBER – SEE DRAWING NO. A-01
- FE FIRE EXTINGUISHER – DRY CHEMICAL
- FEC FIRE EXTINGUISHER CABINET – DRY CHEMICAL
- $CO_2$ FIRE EXTINGUISHER – CARBON DIOXIDE
- W-1 WINDOW NUMBER – SEE DRAWING NO. A-01
- P1 PARTITION TYPE – SEE DRAWING NO. A-24
- D1 CASEWORK ELEVATION – SEE DRAWING NO. A-12
- R/D ROOF DRAIN

| NO. | DATE | ISSUED FOR | BY |
|---|---|---|---|
| 2 | 4/1/14 | 100% QA COMMENTS | H.J.V. |
| 1 | AUG 2013 | DRC REVIEW | G.A.B. |

DESIGNED W.H.R.
DRAWN A.L.B.
CHECKED W.H.R.
PROJ. ENGR. G.A.B.

DEAN AVERY WALDROP R.A. No. 93380

HAZEN AND SAWYER
Environmental Engineers & Scientists
4000 Hollywood Boulevard, Suite 750N
Hollywood, Florida 33021
Certificate of Authorization Number: 2771

SCALE –

CLIENTS PROJECT: –
ENGINEERS PROJECT: 44238-004
CAD REFERENCE: 44238-004BP3-A03

NORTH MIAMI FLORIDA
CITY OF NORTH MIAMI
PUBLIC WORKS UTILITIES

WINSON WATER TREATMENT PLANT
BID PACKAGE 3: WTP REHABILITATION
NEW ADMINISTRATION BUILDING
FIRST FLOOR PLAN

DATE: JUNE 2014
SHEET: 192 OF 335
DRAWING: A-03

PERMITTING

PLOT DATE: 6/10/2014 9:30 AM BY: HSCALIT

XREFs= ..\Tblock\44238-004-BP3-TB,..\Base-BP3\A-BP3-Admin-Plan-Bottom,..\Base-BP3\F-BP3-Admin-Plan-Bottom,..\Base-BP3\E-BP3-Admin-Plan-Bottom,..\Base-BP3\S-BP3-Admin-Plan-Bottom

File = H:\44238-004\Drawings\Bid Package 3 - WTP Rehab\Arch\44238-004BP3-A03 Saved by HsCal2 Save date = 6/9/2014 6:30 PM

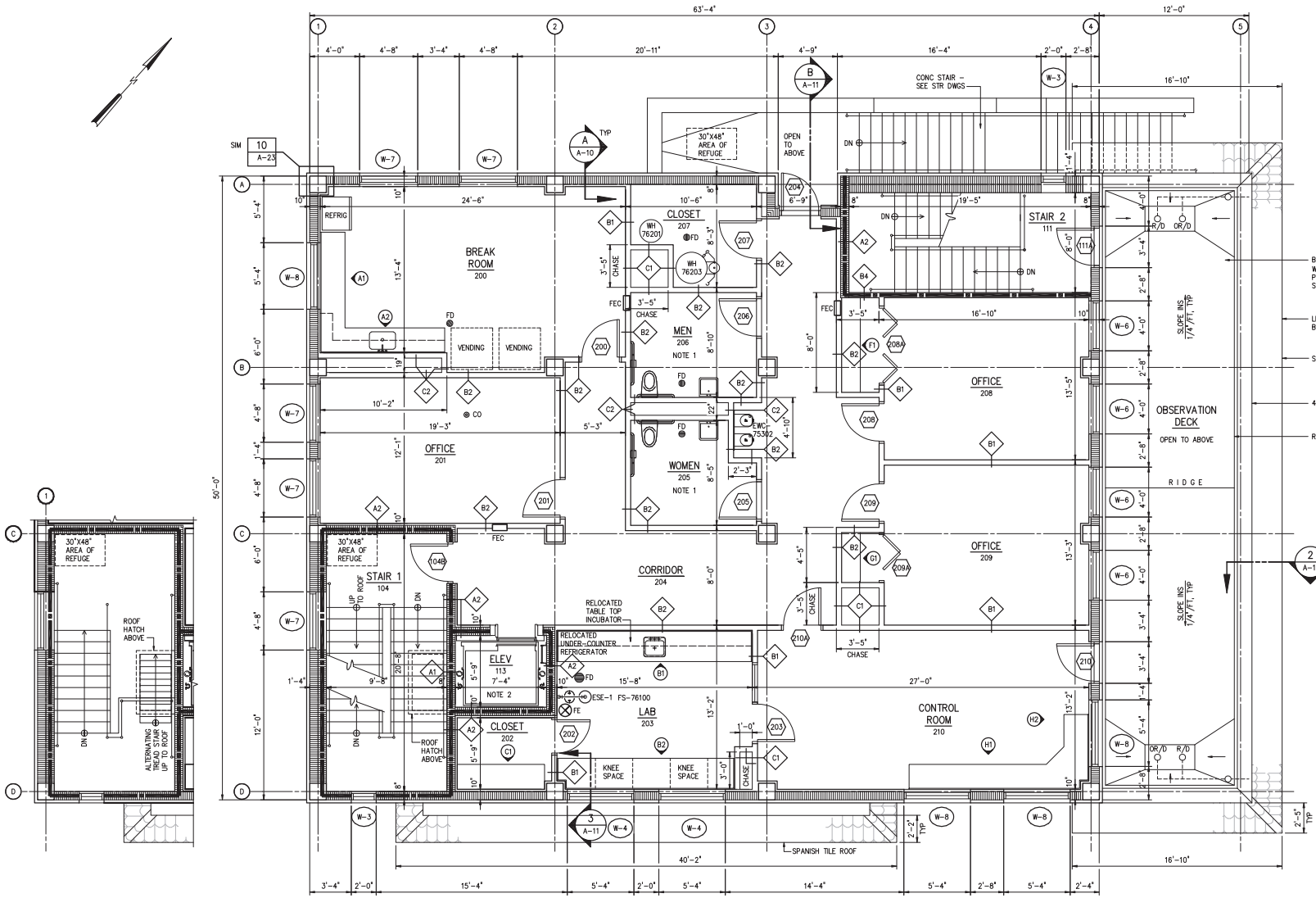


STAIR TO ROOF
1/4" = 1'-0"

SECOND FLOOR PLAN
1/4" = 1'-0"

## NOTES:

1. SEE DRAWING A-13 FOR ENLARGED TOILET PLAN.
2. SEE DRAWING A-24 FOR ENLARGED ELEVATOR PLAN.
3. SEE DRAWING A-16 FOR FURNITURE PLAN.
4. DIMENSIONS ARE TO FACE OF STUD OR NOMINAL FACE OF MASONRY.
5. CLEAR (CL) DIMENSIONS ARE MINIMUM DIMENSION FROM FACE OF FINISH TO FACE OF FINISH.
6. SURFACE OF CONCRETE STAIR (TREAD, RISER AND LANDING) SHALL RECEIVE SLIP RESISTANT COATING.
7. ALL WALLS OF CORRIDOR SHALL BE FULL HEIGHT, WITH 5/8" GYP BD TO UNDERSIDE OF FLOOR SLAB ABOVE.

## LEGEND:

- 1-HR FIRE RATED PARTITION – SEE DRAWING NO. A-24
- CONCRETE MASONRY
- 100 DOOR NUMBER – SEE DRAWING NO. A-01
- FE FIRE EXTINGUISHER – DRY CHEMICAL
- FEC FIRE EXTINGUISHER CABINET – DRY CHEMICAL
- W-1 WINDOW NUMBER – SEE DRAWING NO. A-01
- P1 PARTITION TYPE – SEE DRAWING NO. A-24
- D1 CASEWORK ELEVATION – SEE DRAWING NO. A-12
- R/D ROOF DRAIN
- OR/D OVERFLOW ROOF DRAIN

| NO. | DATE | ISSUED FOR | BY |
|---|---|---|---|
| 2 | 4/1/14 | 100% QA COMMENTS | H.J.V. |
| 1 | AUG 2013 | DRC REVIEW | G.A.B. |

DESIGNED W.H.R.
DRAWN A.L.B.
CHECKED W.H.R.
PROJ. ENGR. G.A.B.

DEAN AVERY WALDROP R.A.
No. 93380

HAZEN AND SAWYER
Environmental Engineers & Scientists
4000 Hollywood Boulevard, Suite 750N
Hollywood, Florida 33021
Certificate of Authorization Number: 2771

SCALE –

CLIENTS PROJECT: –
ENGINEERS PROJECT: 44238-004
CAD REFERENCE: 44238-004BP3-A04

NORTH MIAMI FLORIDA
CITY OF NORTH MIAMI
PUBLIC WORKS UTILITIES

WINSON WATER TREATMENT PLANT
BID PACKAGE 3: WTP REHABILITATION
NEW ADMINISTRATION BUILDING
SECOND FLOOR PLAN

DATE: JUNE 2014
SHEET: 193 OF 335
DRAWING: A-04

PERMITTING

XREFs= ..\Tblock\44238-004-BP3-TB,..\Base-BP3\A-BP3-Admin-Plan-Top,..\Base-BP3\A-BP3-Admin-Plan-Col-Grid,..\Base-BP3\P-BP3-Admin-Plan-Top,..\Base-BP3\A-BP3-Admin-Plan-Stair-to-Roof

File = H:\44238-004\Drawings\Bid Package 3 – WTP Rehab\Arch\44238-004BP3-A04 Saved by HsCal12 Save date = 6/9/2014 8:53 PM

PLOT DATE: 6/10/2014 9:31 AM BY: HSCAL11

## NOTES:

1. VENT PIPE – SEE DETAIL 4/A-23.
2. ROOF WALKWAY PADS – SEE DETAIL 0753411.
3. EXHAUST FAN – SEE HVAC DRAWINGS AND DETAIL 5/A-23.
4. PROVIDE ADDITIONAL INSULATION THICKNESS TO ALL CENTER AREA TO DRAIN OVER CRICKETS.

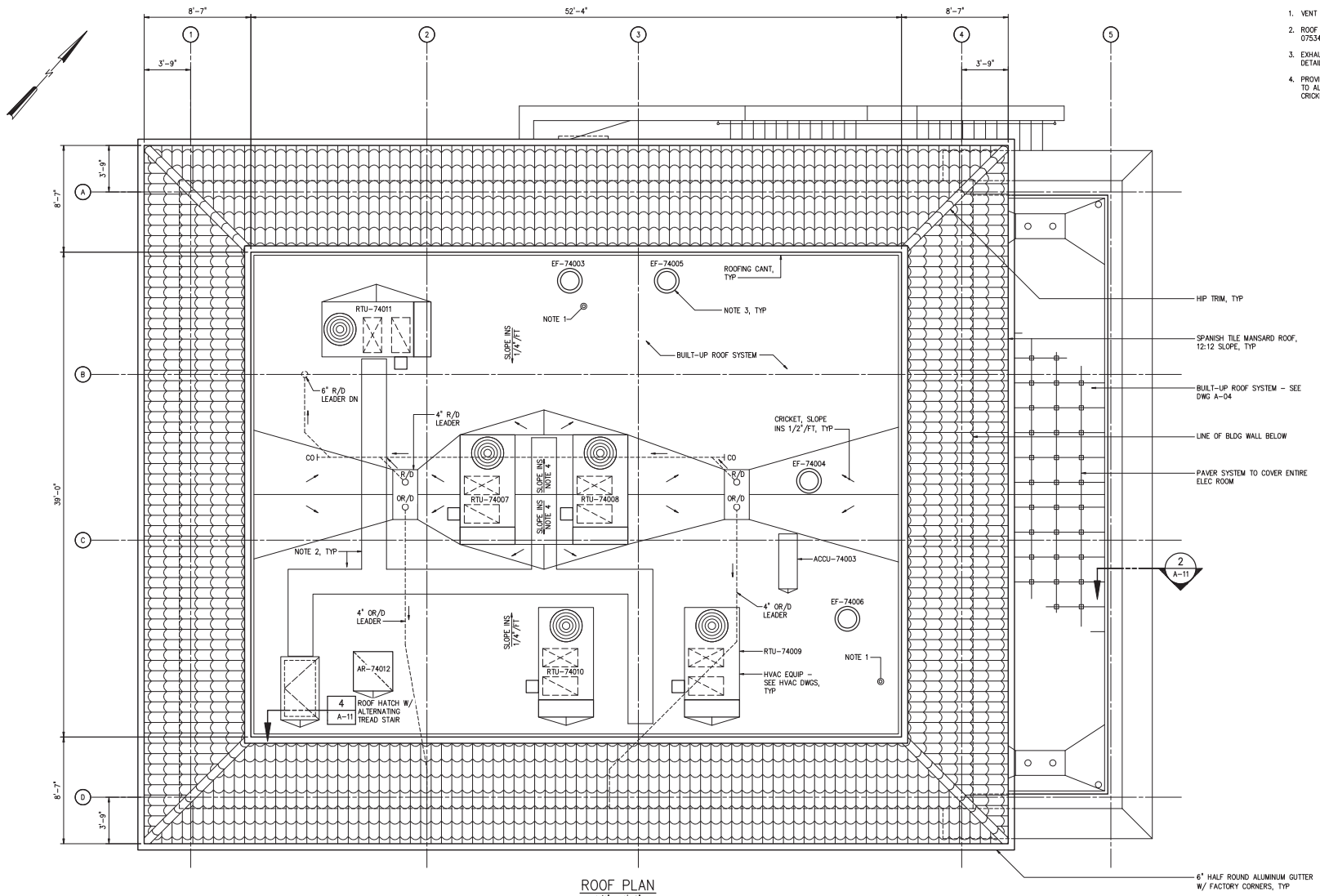


ROOF PLAN
1/4" = 1'-0"

| NO. | DATE | ISSUED FOR | BY |
|---|---|---|---|
| 2 | 4/1/14 | 100% QA COMMENTS | H.J.V. |
| 1 | AUG 2013 | DRC REVIEW | G.A.B. |

DESIGNED W.H.R.
DRAWN A.L.B.
CHECKED W.H.R.
PROJ. ENGR. G.A.B.

DEAN AVERY WALDROP R.A.
No. 93380

**HAZEN AND SAWYER**
Environmental Engineers & Scientists
4000 Hollywood Boulevard, Suite 750N
Hollywood, Florida 33021
Certificate of Authorization Number: 2771

SCALE –

CLIENTS PROJECT: –
ENGINEERS PROJECT: 44238-004
CAD REFERENCE: 44238-004BP3-A05

NORTH MIAMI FLORIDA
CITY OF NORTH MIAMI
PUBLIC WORKS UTILITIES

WINSON WATER TREATMENT PLANT
BID PACKAGE 3: WTP REHABILITATION
NEW ADMINISTRATION BUILDING
ROOF PLAN

DATE: JUNE 2014
SHEET: 194 OF 335
DRAWING: A-05

PERMITTING

PLOT DATE: 6/10/2014 9:33 AM BY: HSCALIT

XREFs= ..\Tblock\44238-004-BP3-TB,..\Base-BP3\A-BP3-Admin-Plan-Roof,..\Base-BP3\A-BP3-Admin-Plan-Col-Grid,..\Base-BP3\A-BP3-Admin-Plan-Top,..\Base-BP3\H-BP3-Admin-Plan-Roof

File = H:\44238-004\Drawings\Bid Package 3 – WTP Rehab\Arch\44238-004BP3-A05 Saved by HsCalI2 Save date = 6/9/2014 5:53 PM

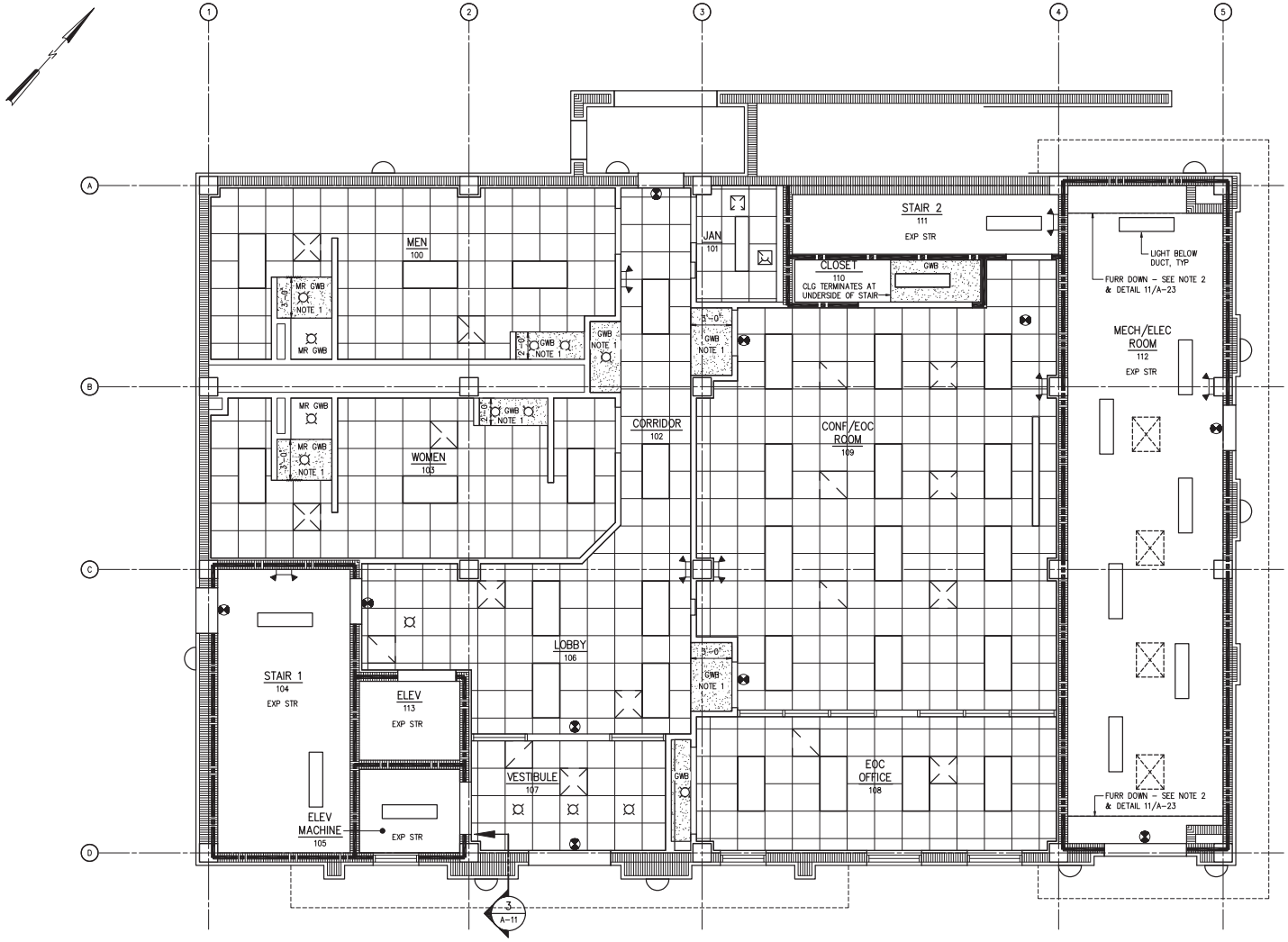


BOTTOM REFLECTED CEILING PLAN
1/4" = 1'-0"

**NOTES:**

1. GWB SOFFIT – SEE DETAIL 7/A-23.
2. SIZE OF FURR DOWN SHALL BE COORDINATED WITH ROOF DRAIN PIPING. FURR DOWN SHALL COMPLETELY ENCASE ROOF DRAIN PIPING.

**LEGEND:**

| | |
|---|---|
| | DENOTES 2' X 2' LAY-IN ACOUSTICAL CEILING |
| GWB | DENOTES 1/2" GYPSUM WALLBOARD CEILING |
| EXP STR | DENOTES EXPOSED STRUCTURE ABOVE |
| | DENOTES DIFFUSER – SEE HVAC DWGS |
| | DENOTES FLOURESCENT LIGHT FIXTURE – SEE ELEC DWGS |
| | DENOTES INCANDESCENT LIGHT FIXTURE – SEE ELEC DWGS |

| NO. | DATE | ISSUED FOR | BY |
|---|---|---|---|

DESIGNED W.H.R.
DRAWN A.L.B.
CHECKED W.H.R.
PROJ. ENGR. G.A.B.

DEAN AVERY WALDROP R.A.
No. 93380

HAZEN AND SAWYER
Environmental Engineers & Scientists
4000 Hollywood Boulevard, Suite 750N
Hollywood, Florida 33021
Certificate of Authorization Number: 2771

SCALE –

CLIENTS PROJECT: –
ENGINEERS PROJECT: 44238-004
CAD REFERENCE: 44238-004BP3-A06

NORTH MIAMI FLORIDA
CITY OF NORTH MIAMI
PUBLIC WORKS UTILITIES

WINSON WATER TREATMENT PLANT
BID PACKAGE 3: WTP REHABILITATION
NEW ADMINISTRATION BUILDING
FIRST FLOOR REFLECTED
CEILING PLAN

DATE: JUNE 2014
SHEET: 195 OF 335
DRAWING: A-06

PERMITTING

PLOT DATE: 6/10/2014 9:30 AM BY: HSCALIT

XREFs= ..\Block\44238-004-BP3-TB,..\Base-BP3\A-BP3-Admin-Plan-Bottom-Reflected-Ceiling,..\Base-BP3\A-BP3-Admin-Plan-Bottom,..\Base-BP3\A-BP3-Admin-Plan-Col-Grid,..\Base-BP3\H-BP3-Admin-Plan-Bottom

File = H:\44238-004\Drawings\Bid Package 3 - WTP Rehab\Arch\44238-004BP3-A06 Saved by abloha Save date = 6/9/2014 5:09 PM

**NOTES:**

1. GWB BULKHEAD – SEE DETAIL 6/A-23.
2. GWB SOFFIT – SEE DETAIL 7/A-23.

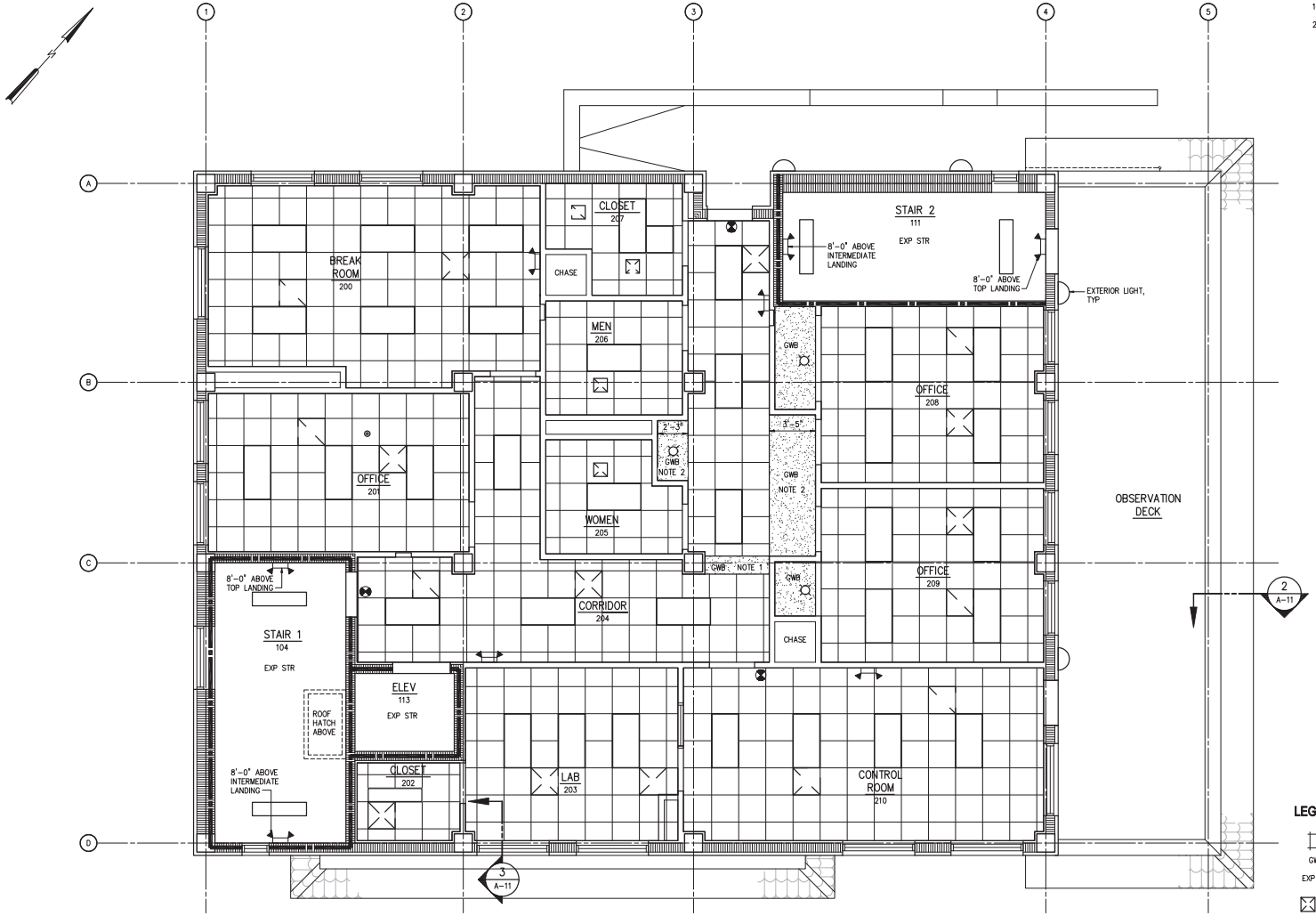


TOP REFLECTED CEILING PLAN
1/4" = 1'-0"

**LEGEND:**

| | |
|---|---|
| | DENOTES 2' X 2' LAY-IN ACOUSTICAL CEILING |
| GWB | DENOTES 1/2" GYPSUM WALLBOARD CEILING |
| EXP STR | DENOTES EXPOSED STRUCTURE ABOVE |
| | DENOTES DIFFUSER – SEE HVAC DWGS |
| | DENOTES FLOURESCENT LIGHT FIXTURE – SEE ELEC DWGS |
| | DENOTES INCANDESCENT LIGHT FIXTURE – SEE ELEC DWGS |

| NO. | DATE | ISSUED FOR | BY |
|---|---|---|---|

DESIGNED W.H.R.
DRAWN A.L.B.
CHECKED W.H.R.
PROJ. ENGR. G.A.B.

DEAN AVERY WALDROP R.A.
No. 93380

**HAZEN AND SAWYER**
Environmental Engineers & Scientists
4000 Hollywood Boulevard, Suite 750N
Hollywood, Florida 33021
Certificate of Authorization Number: 2771

SCALE –

CLIENTS PROJECT: –
ENGINEERS PROJECT: 44238-004
CAD REFERENCE: 44238-004BP3-A07

NORTH MIAMI FLORIDA
CITY OF NORTH MIAMI
PUBLIC WORKS UTILITIES

WINSON WATER TREATMENT PLANT
BID PACKAGE 3: WTP REHABILITATION
NEW ADMINISTRATION BUILDING
SECOND FLOOR REFLECTED
CEILING PLAN

DATE: JUNE 2014
SHEET: 196 OF 335
DRAWING: A-07

PERMITTING

PLOT DATE: 6/10/2014 9:39 AM BY: HSCALIT

XREFs= ..\Tblock\44238-004-BP3-TB,..\Base-BP3\A-BP3-Admin-Plan-Top-Reflected-Ceiling,..\Base-BP3\A-BP3-Admin-Plan-Top,..\Base-BP3\A-BP3-Admin-Plan-Col-Grid,..\Base-BP3\H-BP3-Admin-Plan-Top

File = H:\44238-004\Drawings\Bid Package 3 – WTP Rehab\Arch\44238-004BP3-A07 Saved by dblaha Save date = 6/9/2014 7:47 PM

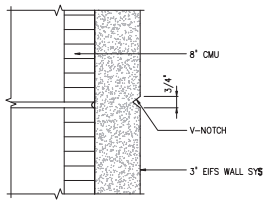


EIFS REVEAL JOINT

**DETAIL** 1 / A-08
3" = 1'-0"

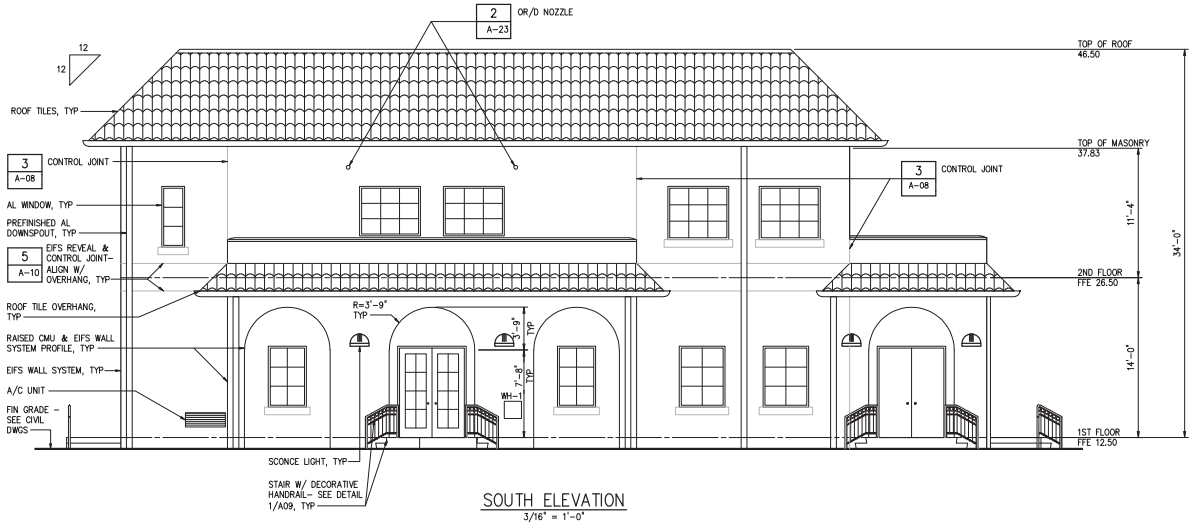


SOUTH ELEVATION
3/16" = 1'-0"

EIFS HORIZONTAL CONTROL JOINT

**DETAIL** 2 / A-08
3" = 1'-0"

EIFS VERTICAL CONTROL JOINT

**DETAIL** 3 / A-08
3" = 1'-0"

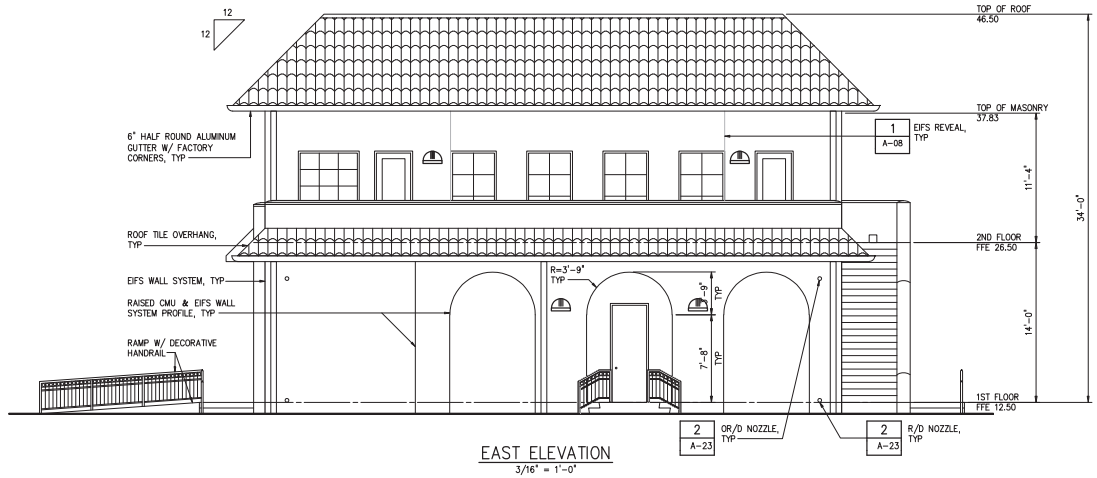


EAST ELEVATION
3/16" = 1'-0"

| NO. | DATE | ISSUED FOR | BY |
|---|---|---|---|
| 2 | 4/1/14 | 100% QA COMMENTS | H.J.V. |
| 1 | AUG 2013 | DRC REVIEW | G.A.B. |

DESIGNED W.H.R.
DRAWN A.L.B.
CHECKED W.H.R.
PROJ. ENGR. G.A.B.

DEAN AVERY WALDROP R.A.
No. 93380

**HAZEN AND SAWYER**
Environmental Engineers & Scientists
4000 Hollywood Boulevard, Suite 750N
Hollywood, Florida 33021
Certificate of Authorization Number: 2771

SCALE –

CLIENTS PROJECT: –
ENGINEERS PROJECT: 44238-004
CAD REFERENCE: 44238-004BP3-A08

NORTH MIAMI FLORIDA
**CITY OF NORTH MIAMI**
**PUBLIC WORKS UTILITIES**

WINSON WATER TREATMENT PLANT
BID PACKAGE 3: WTP REHABILITATION
NEW ADMINISTRATION BUILDING
SOUTH AND EAST ELEVATIONS

DATE: JUNE 2014
SHEET: 197 OF 335
DRAWING: A-08

PERMITTING

PLOT DATE: 6/10/2014 9:39 AM BY: HSCALIT

XREFs= ..\Tblock\44238-004-BP3-TB,..\Base-BP3\A-BP3-Admin-Elev,..\Arch Details\A-SD-07 Stucco Reveal

File = H:\44238-004\Drawings\Bid Package 3 - WTP Rehab\Arch\44238-004BP3-A08 Saved by HsCal2 Save date = 6/9/2014 6:03 PM

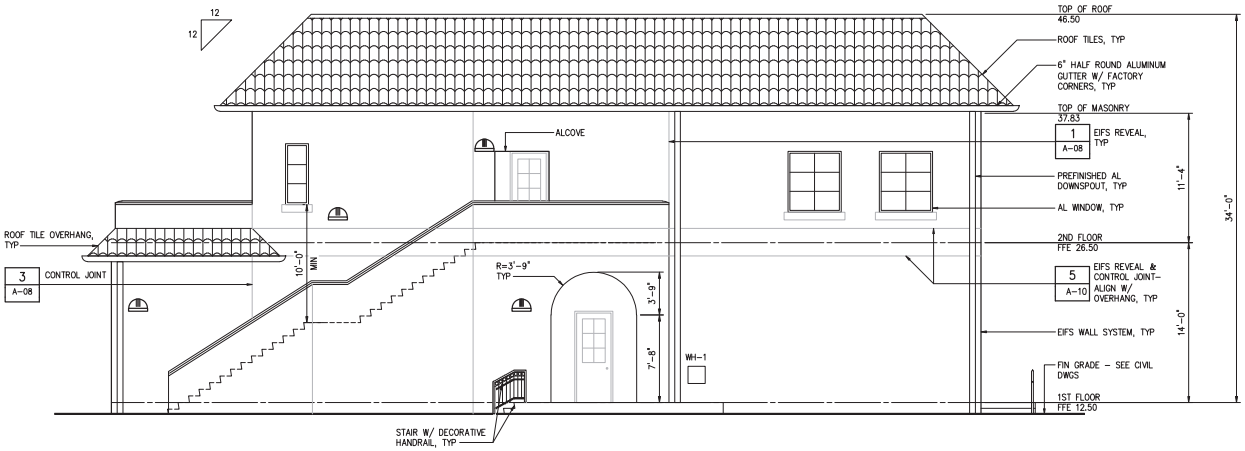


NORTH ELEVATION
3/16" = 1'-0"

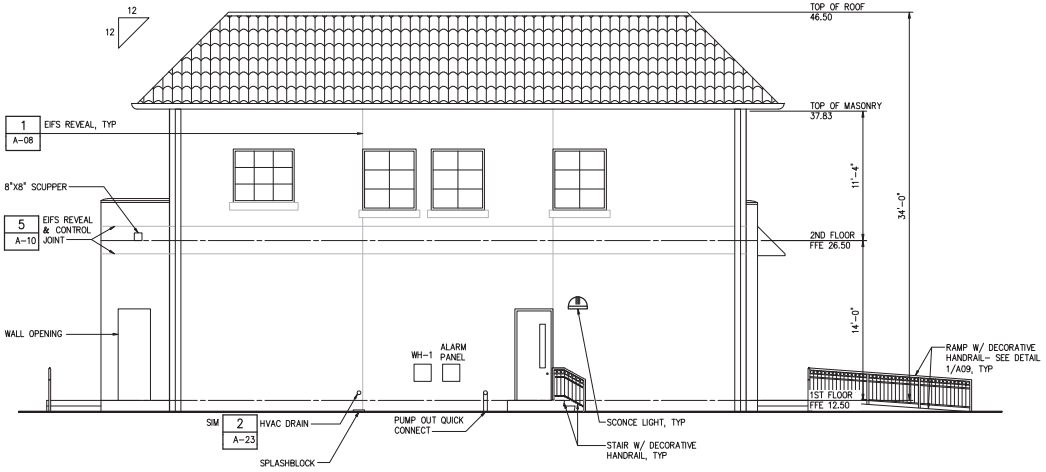


WEST ELEVATION
3/16" = 1'-0"

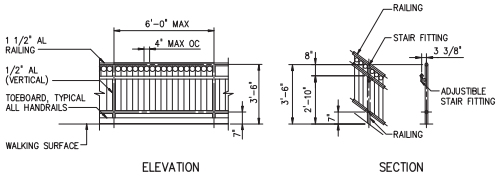


DECORATIVE HANDRAIL

DETAIL 1 / A09

NTS

| NO. | DATE | ISSUED FOR | BY |
|---|---|---|---|
| 2 | 4/1/14 | 100% QA COMMENTS | H.J.V. |
| 1 | AUG 2013 | DRC REVIEW | G.A.B. |

DESIGNED W.H.R.
DRAWN A.L.B.
CHECKED W.H.R.
PROJ. ENGR. G.A.B.

DEAN AVERY WALDROP R.A.
No. 93380

HAZEN AND SAWYER
Environmental Engineers & Scientists
4000 Hollywood Boulevard, Suite 750N
Hollywood, Florida 33021
Certificate of Authorization Number: 2771

SCALE –

CLIENTS PROJECT: –
ENGINEERS PROJECT: 44238-004
CAD REFERENCE: 44238-004BP3-A09

NORTH MIAMI FLORIDA
CITY OF NORTH MIAMI
PUBLIC WORKS UTILITIES

WINSON WATER TREATMENT PLANT
BID PACKAGE 3: WTP REHABILITATION
NEW ADMINISTRATION BUILDING
NORTH AND WEST ELEVATIONS

DATE: JUNE 2014
SHEET: 198 OF 335
DRAWING: A-09

PERMITTING

PLOT DATE: 6/10/2014 9:42 AM BY: HSCALIT

XREFs= ..\Tblock\44238-004-BP3-TB,..\Base-BP3\A-BP3-Admin-Elev

File = H:\44238-004\Drawings\Bid Package 3 - WTP Rehab\Arch\44238-004BP3-A09 Saved by HsCalI2 Save date = 6/9/2014 7:03 PM

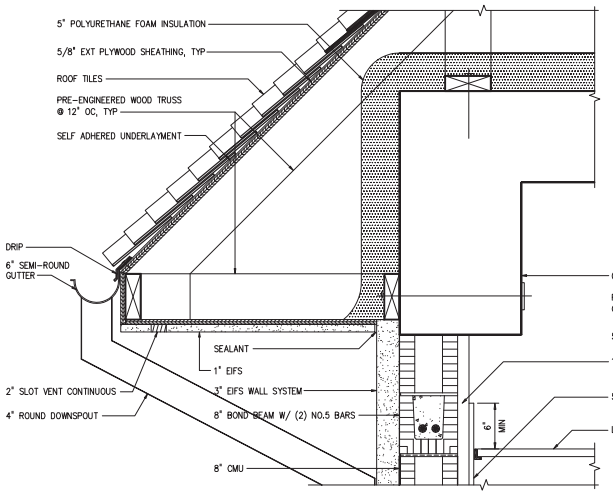


EAVE

**DETAIL** 1 (A-10) 1 1/2" = 1'-0"

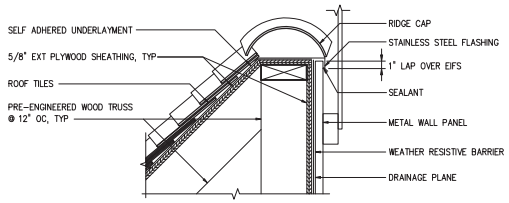


MANSARD TOP

**DETAIL** 3 (A-10) 1 1/2" = 1'-0"

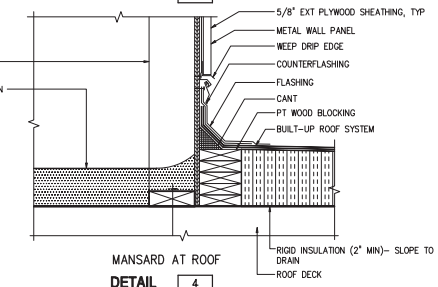


MANSARD AT ROOF

**DETAIL** 4 (A-10) 1 1/2" = 1'-0"

**NOTES:**

1. SEE STRU DWGS FOR REINFORCEMENT, TYP.

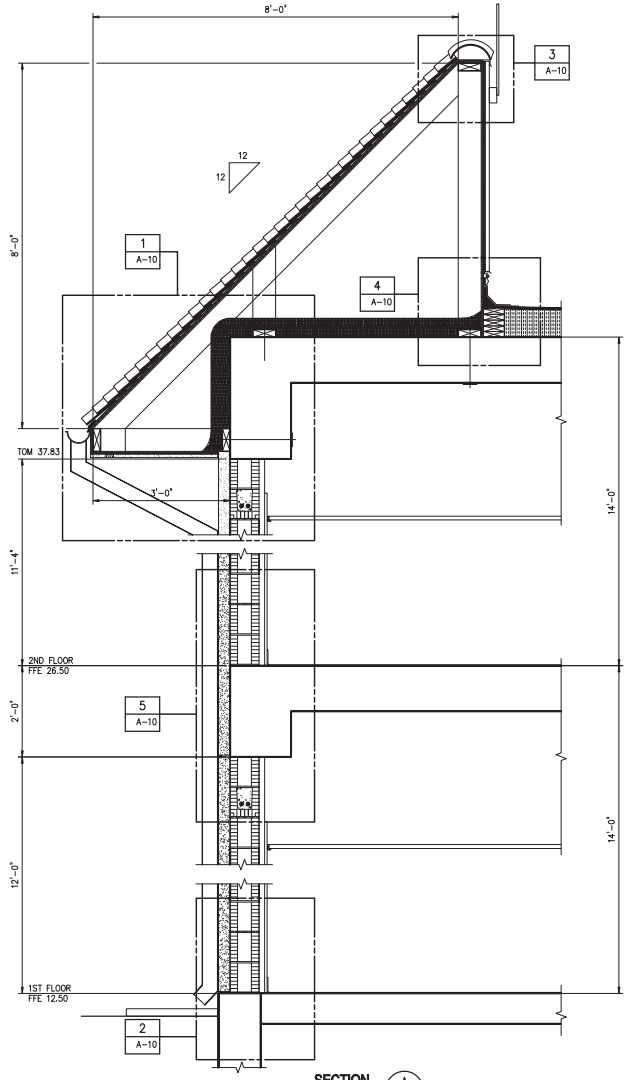


**SECTION** A (A-03) 3/4" = 1'-0"

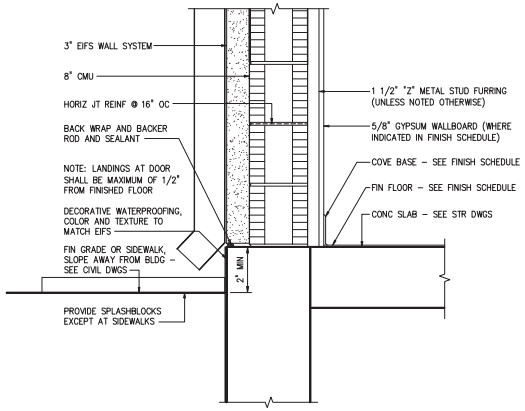


EXTERIOR WALL BOTTOM

**DETAIL** 2 (A-10) 1 1/2" = 1'-0"

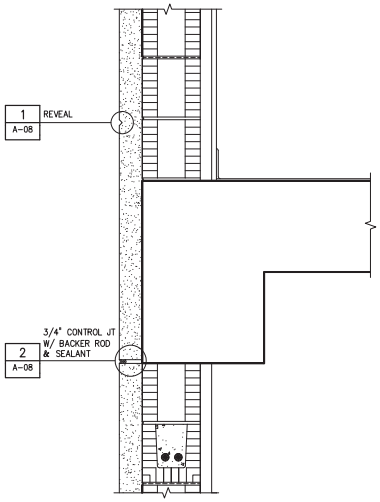


INTERMEDIATE LEVEL

**DETAIL** 5 (A-10) 1 1/2" = 1'-0"

| NO. | DATE | ISSUED FOR | BY |
|---|---|---|---|
| 1 | 4/1/14 | 100% QA COMMENTS | H.J.V. |

DESIGNED W.H.R.
DRAWN A.L.B.
CHECKED W.H.R.
PROJ. ENGR. G.A.B.

DEAN AVERY WALDROP R.A. No. 93380

**HAZEN AND SAWYER**
Environmental Engineers & Scientists
4000 Hollywood Boulevard, Suite 750N
Hollywood, Florida 33021
Certificate of Authorization Number: 2771

SCALE –

CLIENTS PROJECT: –
ENGINEERS PROJECT: 44238-004
CAD REFERENCE: 44238-004BP3-A10

NORTH MIAMI FLORIDA
**CITY OF NORTH MIAMI**
**PUBLIC WORKS UTILITIES**

WINSON WATER TREATMENT PLANT
BID PACKAGE 3: WTP REHABILITATION
NEW ADMINISTRATION BUILDING
WALL SECTIONS – SHEET 1

DATE: JUNE 2014
SHEET: 199 OF 335
DRAWING: A-10

PERMITTING

PLOT DATE: 6/10/2014 9:44 AM BY: HSCALIT

XREFs= ..\Tblock\44238-004-BP3-TB,..\Base-BP3\A-BP3-Admin-Section-A

File = H:\44238-004\Drawings\Bid Package 3 - WTP Rehab\Arch\44238-004BP3-A10 Saved by HsCalI2 Save date = 6/9/2014 6:39 PM

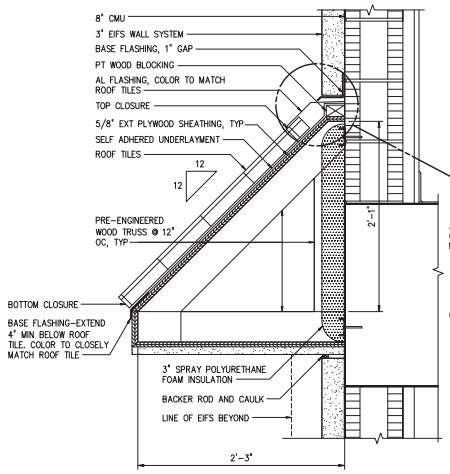


TYPICAL OVERHANG

**DETAIL** 1 / A-11
1 1/2" = 1'-0"

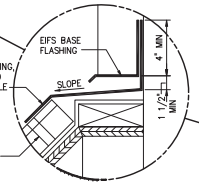


FLASHING

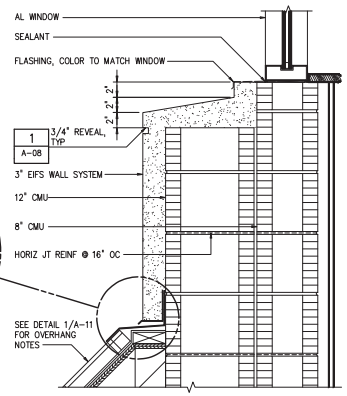


WINDOW SILL AT FACADE

**DETAIL** 3 / A-11
1 1/2" = 1'-0"

**NOTES:**

1. SEE STRU DWGS FOR REINFORCEMENT, TYP.

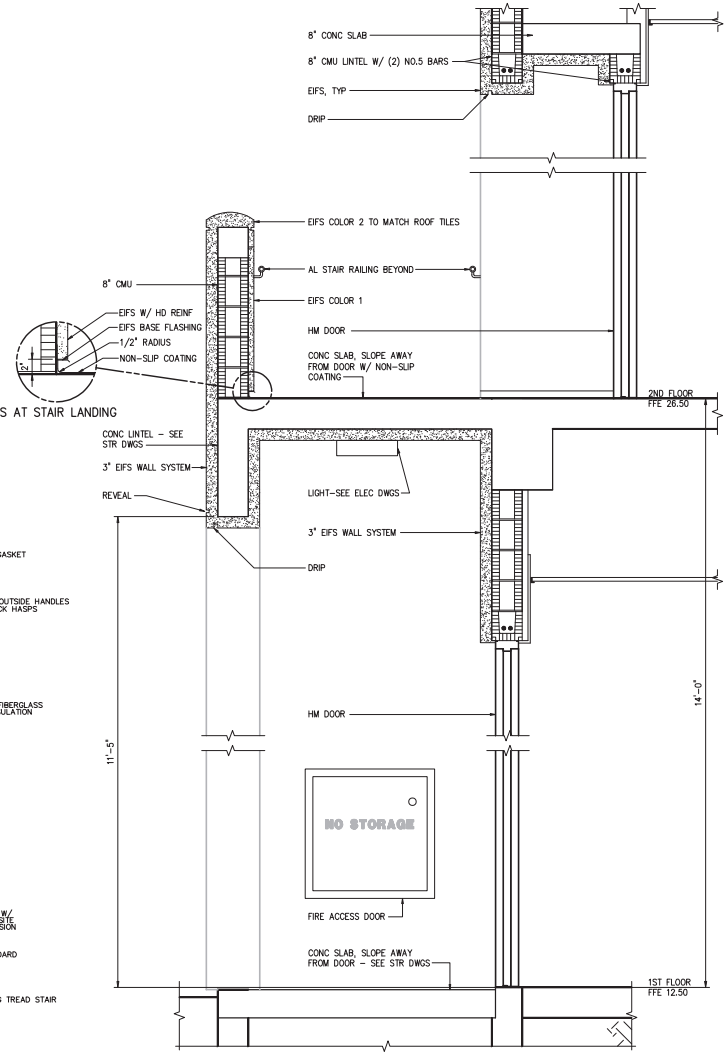


EIFS AT STAIR LANDING

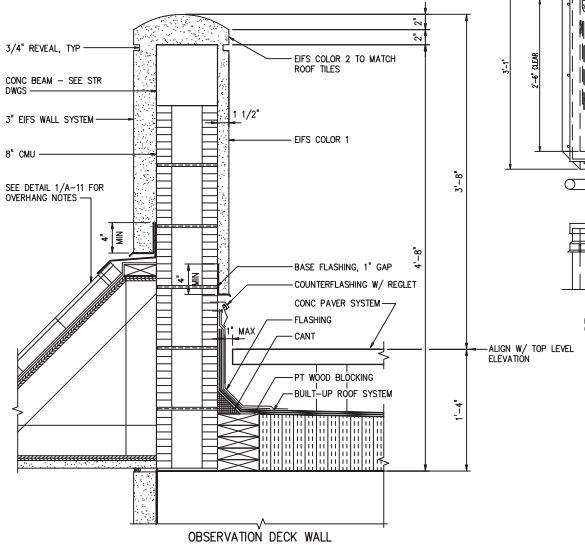


OBSERVATION DECK WALL

**DETAIL** 2 / A-11
1 1/2" = 1'-0"

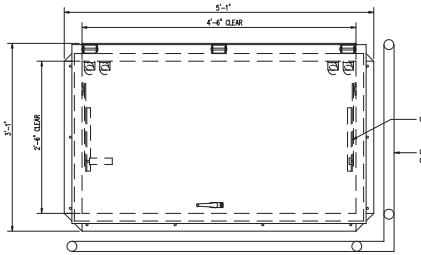


PLAN

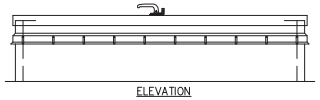

ELEVATION

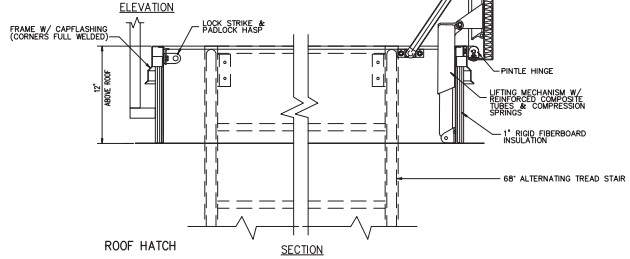


SECTION

ROOF HATCH

**DETAIL** 4 / A-05
1" = 1'-0"

**SECTION** B / A-03
3/4" = 1'-0"

| NO. | DATE | ISSUED FOR | BY |
|---|---|---|---|
| 1 | 4/1/14 | 100% QA COMMENTS | H.J.V. |

DESIGNED W.H.R.
DRAWN A.L.B.
CHECKED W.H.R.
PROJ. ENGR. G.A.B.

DEAN AVERY WALDROP R.A.
No. 93380

**HAZEN AND SAWYER**
Environmental Engineers & Scientists
4000 Hollywood Boulevard, Suite 750N
Hollywood, Florida 33021
Certificate of Authorization Number: 2771

SCALE –

CLIENTS PROJECT: –
ENGINEERS PROJECT: 44238-004
CAD REFERENCE: 44238-004BP3-A11

NORTH MIAMI FLORIDA
**CITY OF NORTH MIAMI**
**PUBLIC WORKS UTILITIES**

WINSON WATER TREATMENT PLANT
BID PACKAGE 3: WTP REHABILITATION

NEW ADMINISTRATION BUILDING
WALL SECTIONS - SHEET 2

DATE: JUNE 2014
SHEET: 200 OF 335
DRAWING: A-11

PERMITTING

PLOT DATE: 6/10/2014 9:46 AM BY: HSCALIT

XREFs= ..\Tblock\44238-004-BP3-TB,..\Base-BP3\A-BP3-Admin-Section-B,..\Base-BP3\A-BP3-Admin-Section-C,..\Arch Details\Bilco Roof Hatch

File = H:\44238-004\Drawings\Bid Package 3 - WTP Rehab\Arch\44238-004BP3-A11 Saved by HsCad2 Save date = 6/9/2014 6:42 PM

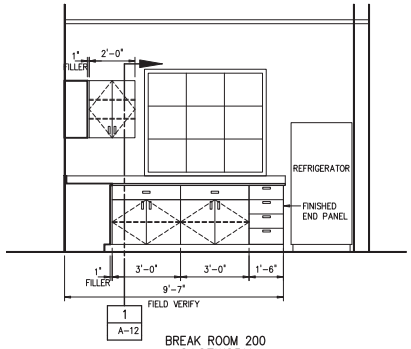


A1 BREAK ROOM 200 CASEWORK
3/8" = 1'-0"

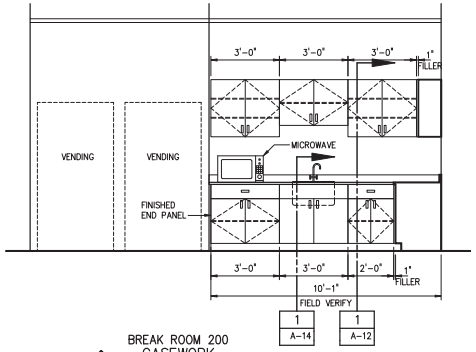


A2 BREAK ROOM 200 CASEWORK
3/8" = 1'-0"

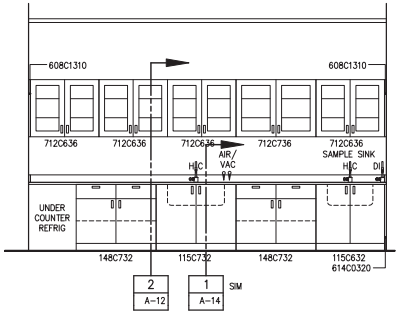


B1 LAB 203 CASEWORK
3/8" = 1'-0"

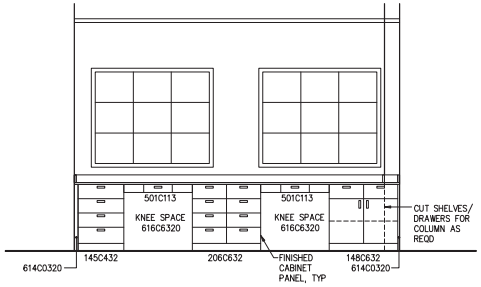


B2 LAB 203 CASEWORK
3/8" = 1'-0"

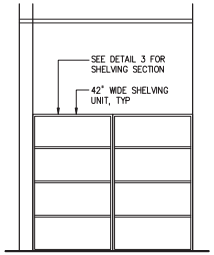


C1 CLOSET 202 CASEWORK
3/8" = 1'-0"

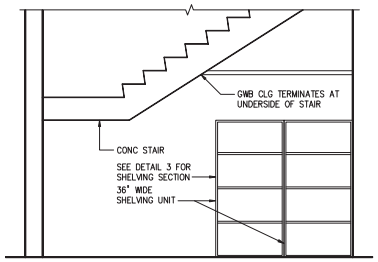


E1 CLOSET 110 CASEWORK
3/8" = 1'-0"

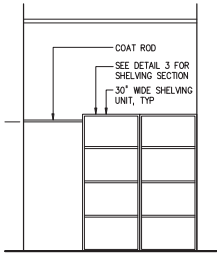


F1 OFFICE 208 CASEWORK
3/8" = 1'-0"

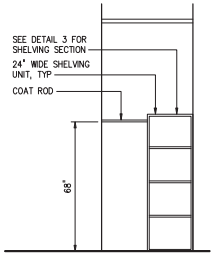


G1 OFFICE 209 CASEWORK
3/8" = 1'-0"

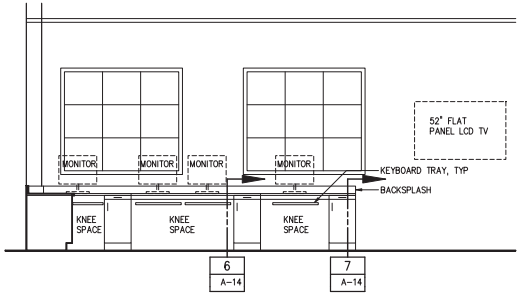


H1 CONTROL ROOM 210 CASEWORK
3/8" = 1'-0"

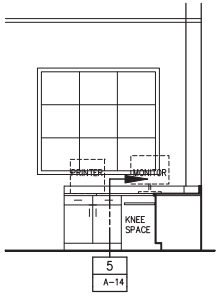


H2 CONTROL ROOM 210 CASEWORK
3/8" = 1'-0"

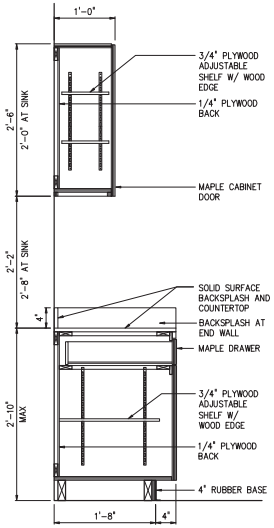


CABINET SECTION TYPICAL
DETAIL 1
1" = 1'-0" A-12

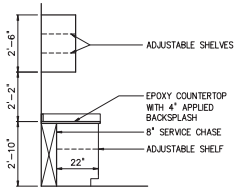


STANDING HEIGHT CASEWORK
DETAIL 2
3/8" = 1'-0" A-12

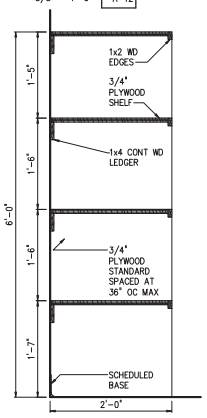


SHELF SECTION
DETAIL 3
1" = 1'-0" A-12

| NO. | DATE | ISSUED FOR | BY |
|---|---|---|---|
| 1 | 4/1/14 | 100% QA COMMENTS | H.J.V. |

DESIGNED W.H.R.
DRAWN A.L.B.
CHECKED W.H.R.
PROJ. ENGR. G.A.B.

DEAN AVERY WALDROP R.A.
No. 93380

HAZEN AND SAWYER
Environmental Engineers & Scientists
4000 Hollywood Boulevard, Suite 750N
Hollywood, Florida 33021
Certificate of Authorization Number: 2771

SCALE –

CLIENTS PROJECT: –
ENGINEERS PROJECT: 44238-004
CAD REFERENCE: 44238-004BP3-A12

NORTH MIAMI FLORIDA
CITY OF NORTH MIAMI
PUBLIC WORKS UTILITIES

WINSON WATER TREATMENT PLANT
BID PACKAGE 3: WTP REHABILITATION
NEW ADMINISTRATION BUILDING
ENLARGED FLOOR PLAN AND ELEVATIONS
SHEET 1

DATE: JUNE 2014
SHEET: 201 OF 335
DRAWING: A-12

PERMITTING

PLOT DATE: 6/10/2014 9:48 AM BY: HSCALIT

XREFs= .\Tblock\44238-004-BP3-TB,.\Arch Details\ADM-A-DA,.\Arch Details\A-SD-19-CABINET-DETLS,.\Arch Details\A-LAB-SECTION

File = H:\44238-004\Drawings\Bid Package 3 - WTP Rehab\Arch\44238-004BP3-A12 Saved by HsCad2 Save date = 6/9/2014 8:17 PM

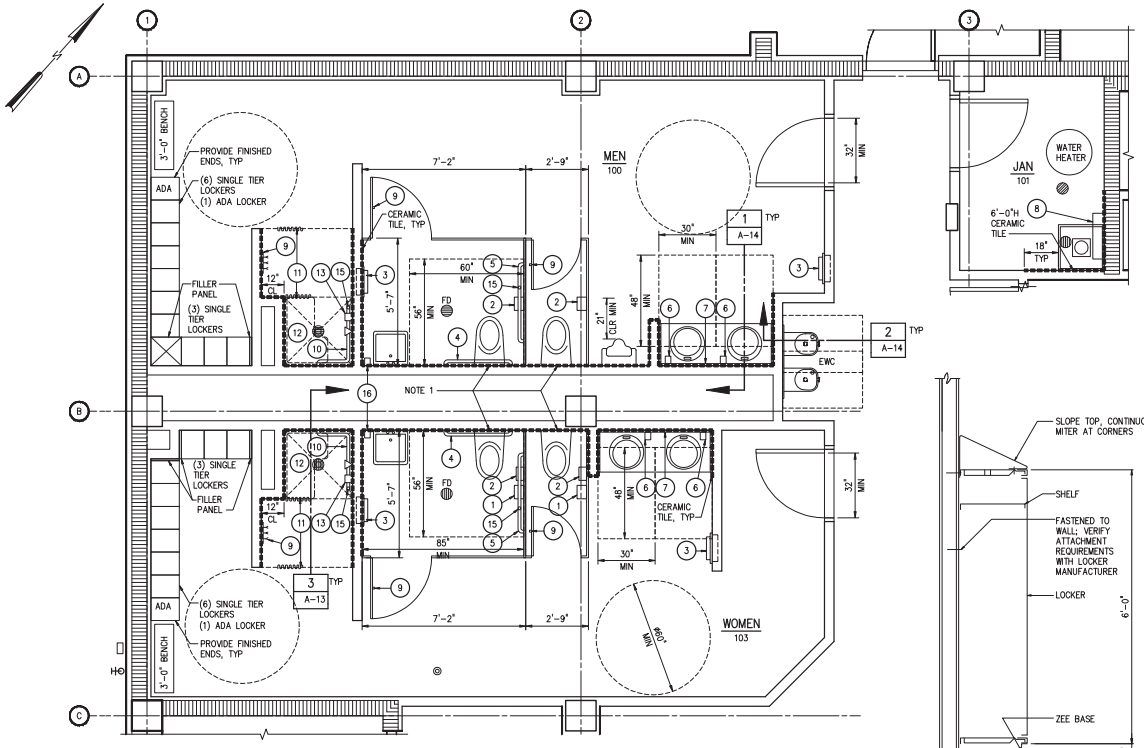


## NOTES:

1. COORDINATE STUD PLACEMENT AND TRACK CUT OUT WITH OFFSET TOILET CARRIER LOCATION TO ENSURE CLEARANCES.
2. FLOOR DRAIN IS DISHED – SEE DETAIL 2/S-03.

FIRST FLOOR TOILET PLAN
3/8" = 1'-0"

**LEGEND:**

CERAMIC TILE – FULL HT UNO

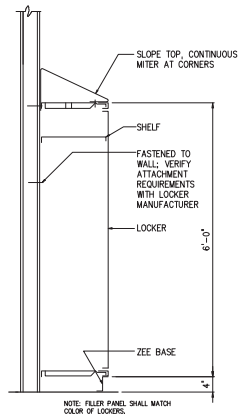


LOCKER SECTION

**DETAIL** 1 / A-13
3/4" = 1'-0"

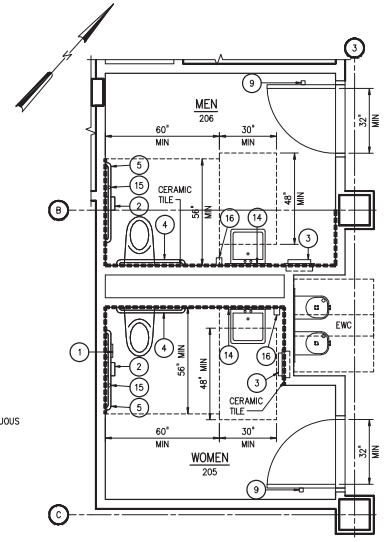


SECOND FLOOR TOILET PLAN
3/8" = 1'-0"

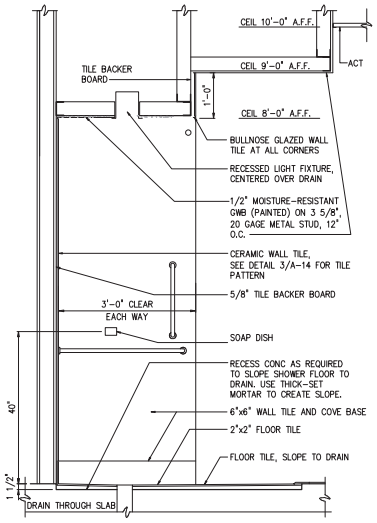


SHOWER SECTION

**DETAIL** 3 / A-13
3/4" = 1'-0"

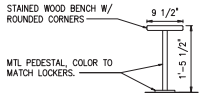


BENCH

**DETAIL** 2 / A-13
3/4" = 1'-0"

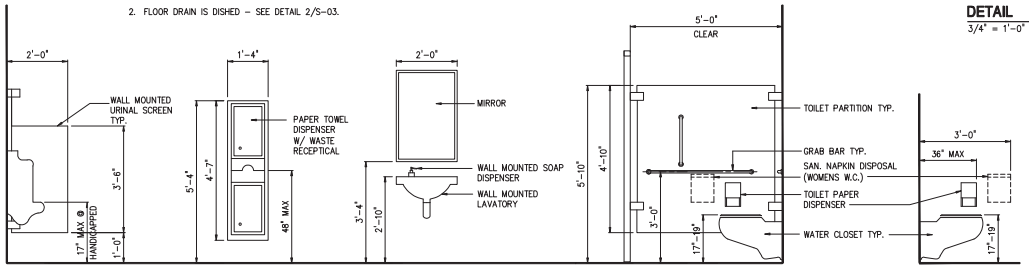


FIXTURE HEIGHTS

**DETAIL** 4 / A-13
1/2" = 1'-0"

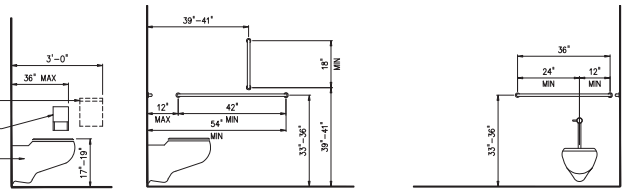


SIDE WALL GRAB BAR FOR WATER CLOSET

REAR WALL GRAB BAR FOR WATER CLOSET

GRAB BAR MOUNTING LOCATIONS

**DETAIL** 5 / A-13
1/2" = 1'-0"

| TOILET ACCESSORY SCHEDULE | | |
|---|---|---|
| NO. | ITEM | MOUNTING HT. AFF |
| 1 | SANITARY NAPKIN DISPOSAL | 18" TO BOTTOM |
| 2 | TOILET TISSUE DISPENSER | 19" |
| 3 | PAPER TOWEL DISPENSER AND DISPOSAL | 40" TO BOTTOM |
| 4 | 36" GRAB BAR | 33"-36" |
| 5 | 42" GRAB BAR | 33"-36" |
| 6 | COUNTER MOUNTED SOAP DISPENSER | -- |
| 7 | MIRROR: WIDTH OF COUNTER, TO CEILING UNO | 38" TO BOTTOM |
| 8 | SHELF W/ MOP AND BROOM HOLDER | 66" TO SHELF |
| 9 | HOOK | 54" |
| 10 | SHOWER GRAB BAR | 33"-36" |
| 11 | SHOWER CURTAIN AND ROD | 78" |
| 12 | FOLDING SHOWER SEAT | 18" TO TOP |
| 13 | SOAP DISH | 40" |
| 14 | 24" x 36" MIRROR | 40" TO BOTTOM |
| 15 | 18" VERTICAL GRAB BAR | 40" TO BOTTOM |
| 16 | WALL MOUNTED SOAP DISPENSER | 40" TO BOTTOM |

| NO. | DATE | ISSUED FOR | BY |
|---|---|---|---|
| 1 | 4/1/14 | 100% QA COMMENTS | H.J.V. |

PLOT DATE: 6/10/2014 9:50 AM BY: HSCALIT

DESIGNED W.H.R.
DRAWN A.L.B.
CHECKED W.H.R.
PROJ. ENGR. G.A.B.

DEAN AVERY WALDROP R.A.
No. 93380

**HAZEN AND SAWYER**
Environmental Engineers & Scientists
4000 Hollywood Boulevard, Suite 750N
Hollywood, Florida 33021
Certificate of Authorization Number: 2771

SCALE –

CLIENTS PROJECT: –
ENGINEERS PROJECT: 44238-004
CAD REFERENCE: 44238-004BP3-A13

NORTH MIAMI FLORIDA
**CITY OF NORTH MIAMI**
**PUBLIC WORKS UTILITIES**

WINSON WATER TREATMENT PLANT
BID PACKAGE 3: WTP REHABILITATION
NEW ADMINISTRATION BUILDING
ENLARGED FLOOR PLAN AND ELEVATIONS
SHEET 2

DATE: JUNE 2014
SHEET: 202 OF 335
DRAWING: A-13

PERMITTING

XREFs= ..\Tblock\44238-004-BP3-TB,..\Base-BP3\A-BP3-Admin-Plan-Bottom,..\Base-BP3\A-BP3-Admin-Plan-Top,..\Base-BP3\A-BP3-Admin-Plan-Col-Grid,..\Base-BP3\P-BP3-Admin-Plan-Bottom,..\Base-BP3\P-BP3-Admin-Plan-Top,..\Arch Details\A-SD-18-LOCKER ROOM-DETLS,..\Arch Details\A-SD-20-FIXTURE-ELEV

File = H:\44238-004\Drawings\Bid Package 3 - WTP Rehab\Arch\44238-004BP3-A13 Saved by HsCalI2 Save date = 6/9/2014 8:13 PM

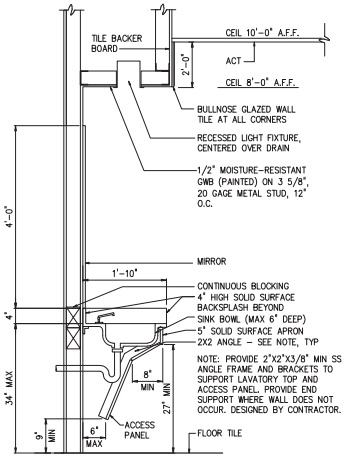


SINK SECTION

**DETAIL** 1 / A-14
3/4" = 1'-0"

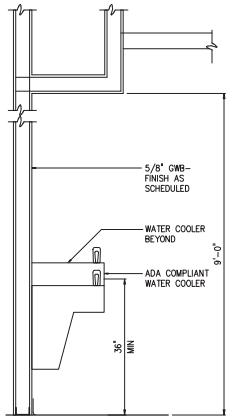


EWC DETAIL

**DETAIL** 2 / A-14
3/4" = 1'-0"

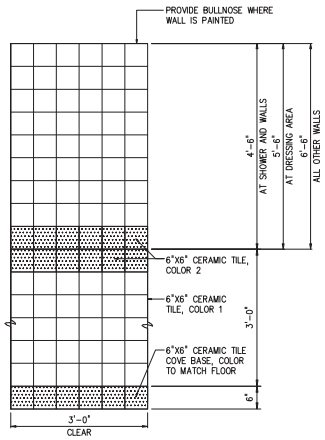


CERAMIC TILE PATTERN

**DETAIL** 3 / A-14
3/4" = 1'-0"

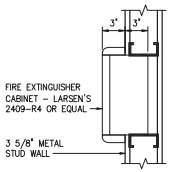


FIRE EXTINGUISHER CABINET

**DETAIL** 4 / A-14
1 1/2" = 1'-0"

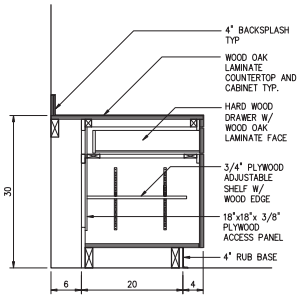


WORKSTATION DRAWER

**DETAIL** 5 / A-12
1" = 1'-0"

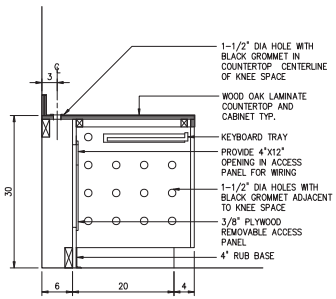


WORKSTATION KEYBOARD TRAY

**DETAIL** 6 / A-12
1" = 1'-0"

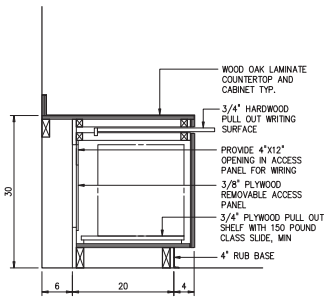


WORKSTATION WRITING TRAY

**DETAIL** 7 / A-12
1" = 1'-0"

| NO. | DATE | ISSUED FOR | BY |
|---|---|---|---|
| 1 | 4/1/14 | 100% QA COMMENTS | H.J.V. |

PLOT DATE: 6/10/2014 9:52 AM BY: HSCAUT

DESIGNED W.H.R.
DRAWN A.L.B.
CHECKED W.H.R.
PROJ. ENGR. G.A.B.

DEAN AVERY WALDROP R.A.
No. 93380

**HAZEN AND SAWYER**
Environmental Engineers & Scientists
4000 Hollywood Boulevard, Suite 750N
Hollywood, Florida 33021
Certificate of Authorization Number: 2771

SCALE –

CLIENTS PROJECT: –
ENGINEERS PROJECT: 44238-004
CAD REFERENCE: 44238-004BP3-A14

NORTH MIAMI FLORIDA
**CITY OF NORTH MIAMI**
**PUBLIC WORKS UTILITIES**

WINSON WATER TREATMENT PLANT
BID PACKAGE 3: WTP REHABILITATION

NEW ADMISTRATION BUILDING
DETAILS

DATE: JUNE 2014
SHEET: 203 OF 335
DRAWING: A-14

PERMITTING

XREFs= ..\Block\44238-004-BP3-TB,..\Arch Details\A-SD-18-LOCKER ROOM-DETLS,..\Arch Details\A-SD-05-Fire Extinguisher-Cabinet,..\Arch Details\Control Room Cabinets

File = H:\44238-004\Drawings\Bid Package 3 - WTP Rehab\Arch\44238-004BP3-A14 Saved by HsCad2 Save date = 6/9/2014 9:00 PM

**NOTES:**

1. FURNITURE TO BE PROVIDED UNDER ALLOWANCE

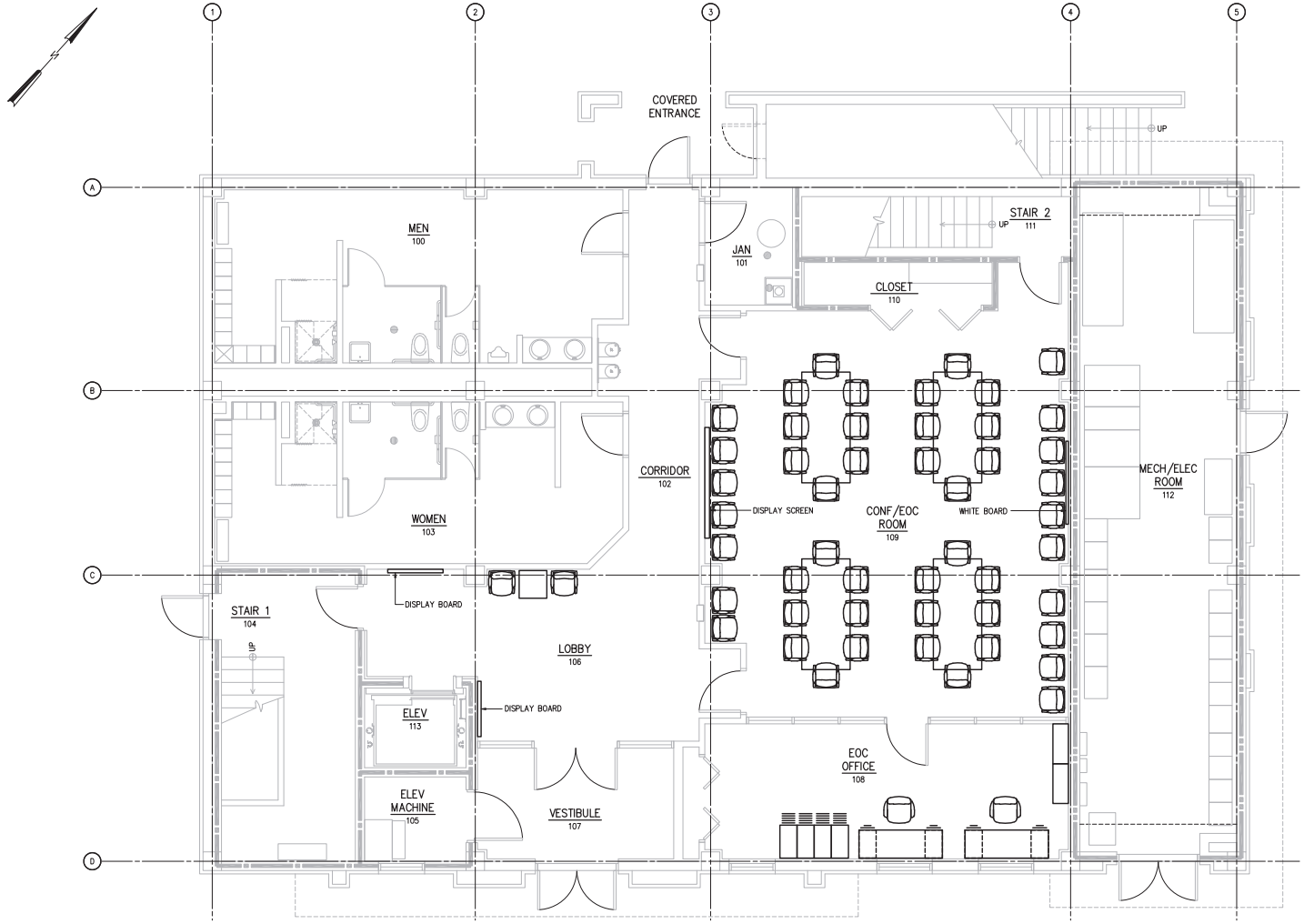


FIRST FLOOR FURNITURE PLAN
1/4" = 1'-0"

| NO. | DATE | ISSUED FOR | BY |
|---|---|---|---|

DESIGNED W.H.R.
DRAWN A.L.B.
CHECKED W.H.R.
PROJ. ENGR. G.A.B.

DEAN AVERY WALDROP R.A.
No. 93380

HAZEN AND SAWYER
Environmental Engineers & Scientists
4000 Hollywood Boulevard, Suite 750N
Hollywood, Florida 33021
Certificate of Authorization Number: 2771

SCALE –

CLIENTS PROJECT: –
ENGINEERS PROJECT: 44238-004
CAD REFERENCE: 44238-004BP3-A15

NORTH MIAMI FLORIDA
CITY OF NORTH MIAMI
PUBLIC WORKS UTILITIES

WINSON WATER TREATMENT PLANT
BID PACKAGE 3: WTP REHABILITATION
NEW ADMINISTRATION BUILDING
FIRST FLOOR FURNITURE PLAN

DATE: JUNE 2014
SHEET: 204 OF 335
DRAWING: A-15

PERMITTING

PLOT DATE: 6/10/2014 9:14 AM BY: HSCALIT

XREFs= ..\Tblock\44238-004-BP3-TB,..\Base-BP3\A-BP3-Admin-Plan-Bottom,..\Base-BP3\A-BP3-Admin-Plan-Col-Grid,..\Base-BP3\F-BP3-Admin-Plan-Bottom,..\Base-BP3\E-BP3-Admin-Plan-Bottom,..\Base-BP3\A-BP3-Admin-Plan-Bottom-Furniture

File = H:\44238-004\Drawings\Bid Package 3 - WTP Rehab\Arch\44238-004BP3-A15 Saved by abldha Save date = 6/9/2014 8:12 PM

**NOTES:**

1. FURNITURE TO BE PROVIDED UNDER ALLOWANCE

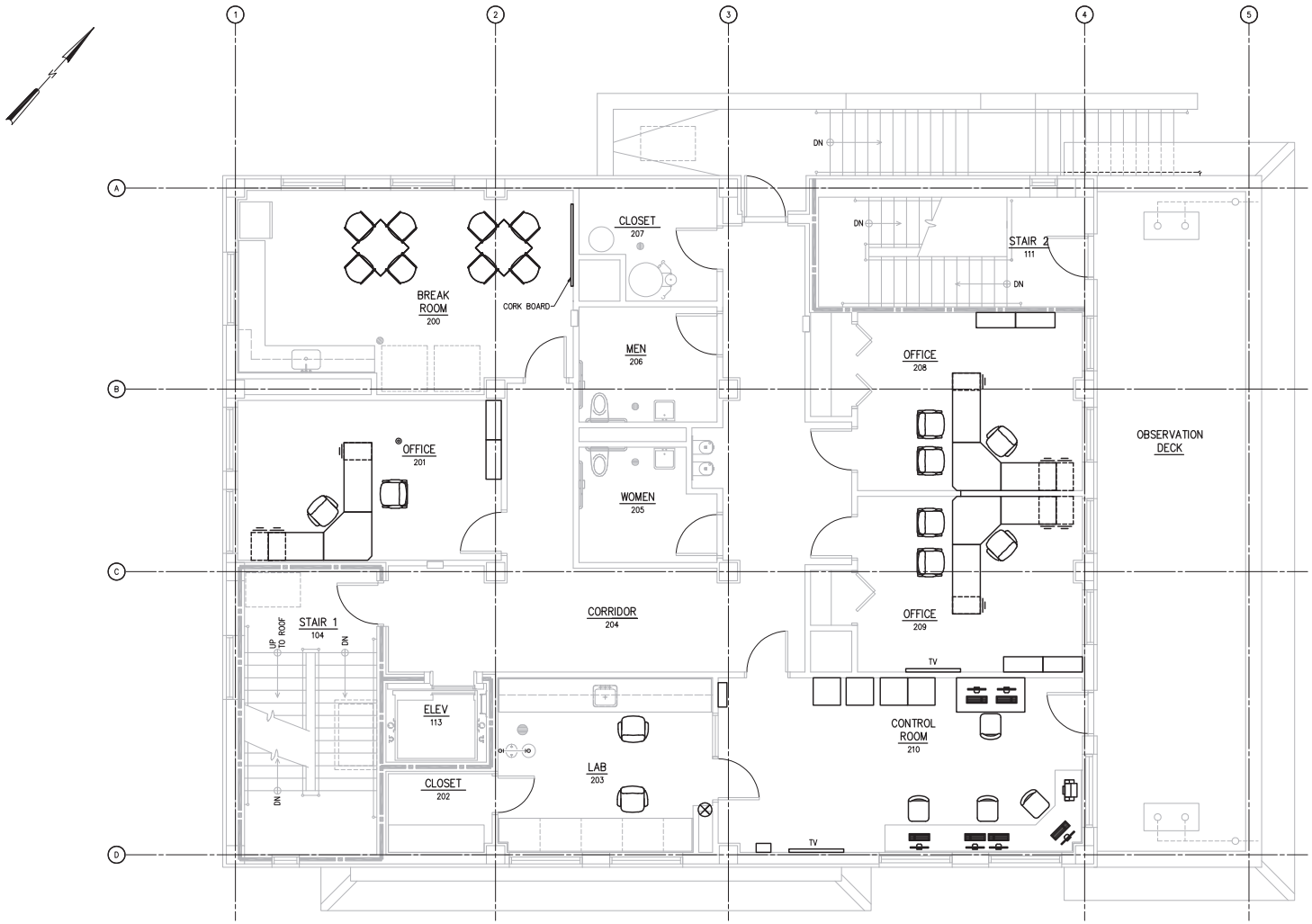


SECOND FLOOR FURNITURE PLAN
1/4" = 1'-0"

| NO. | DATE | ISSUED FOR | BY |
|---|---|---|---|

DESIGNED W.H.R.
DRAWN A.L.B.
CHECKED W.H.R.
PROJ. ENGR. G.A.B.

DEAN AVERY WALDROP R.A.
No. 93380

HAZEN AND SAWYER
Environmental Engineers & Scientists
4000 Hollywood Boulevard, Suite 750N
Hollywood, Florida 33021
Certificate of Authorization Number: 2771

SCALE –

CLIENTS PROJECT: –
ENGINEERS PROJECT: 44238-004
CAD REFERENCE: 44238-004BP3-A16

NORTH MIAMI FLORIDA
CITY OF NORTH MIAMI
PUBLIC WORKS UTILITIES

WINSON WATER TREATMENT PLANT
BID PACKAGE 3: WTP REHABILITATION
NEW ADMINISTRATION BUILDING
SECOND FLOOR FURNITURE PLAN

DATE: JUNE 2014
SHEET: 205 OF 335
DRAWING: A-16

PERMITTING

PLOT DATE: 6/10/2014 9:55 AM BY: HSCALIT

XREFs= ..\Tblock\44238-004-BP3-TB,..\Base-BP3\A-BP3-Admin-Plan-Top,..\Base-BP3\A-BP3-Admin-Plan-Col-Grid,..\Base-BP3\P-BP3-Admin-Plan-Top,..\Base-BP3\A-BP3-Admin-Plan-Top-Furniture

File = H:\44238-004\Drawings\Bid Package 3 - WTP Rehab\Arch\44238-004BP3-A16 Saved by dblaha Save date = 6/9/2014 6:28 PM

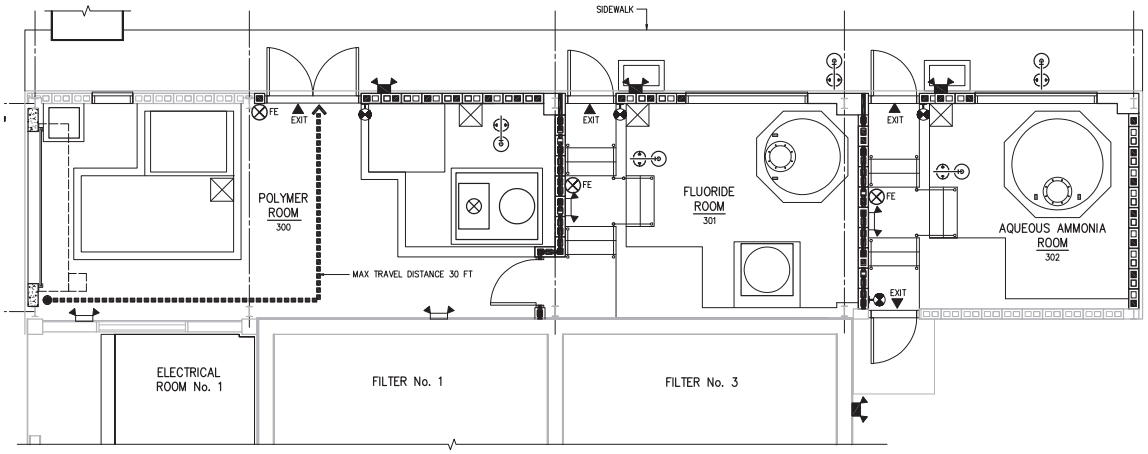


LIFE SAFETY PLAN
1/4" = 1'-0"

## LIFE SAFETY ANALYSIS

APPLICABLE CODES:

2010 FLORIDA BUILDING CODE: FUEL GAS (FIRST PRINTING)
2010 FLORIDA BUILDING CODE: MECHANICAL (FIRST PRINTING)
2010 FLORIDA BUILDING CODE: TEST PROTOCOLS (FIRST PRINTING)
2010 FLORIDA BUILDING CODE: ENERGY CONSERVATION (FIRST PRINTING)
2010 FLORIDA BUILDING CODE: ACCESSIBILITY (FIRST PRINTING)
2010 FLORIDA BUILDING CODE: BUILDING (FIRST PRINTING)
2010 FLORIDA BUILDING CODE: EXISTING BUILDING (FIRST PRINTING)
2010 FLORIDA BUILDING CODE: PLUMBING (FIRST PRINTING)
NFPA 101: 2009 EDITION
NATIONAL ELECTRIC CODE, 2008 EDITION

OCCUPANCY CLASSIFICATION:

ORIGINAL CONSTRUCTION 1963 – NO OCCUPANCY
USE WILL BE CLASSIFIED AS F–3 FACTORY
INDUSTRIAL SPECIAL PURPOSE WITH A
SECONDARY STORAGE S–1 OCCUPANCY (SHOWN)

AQUEOUS AMMONIA – CORROSIVE – 1000 GALLONS
MAX QUANTITY PER CONTROL ROOM 1000
GALLONS PER FLORIDA FIRE PREVENTION
CODE TABLE 60.1.26.3.1(b)

FLUORIDE – CORROSIVE/WATER REACTIVE CLASS 1, 750 GALLONS
MAX QUANTITY PER CONTROL ROOM 1000
GALLONS PER FLORIDA FIRE PREVENTION
CODE TABLE 60.1.26.3.1(b)

COAGULANT AID – NOT CLASSIFIED

ANTICOAGULENT COMBUSTIBLE LIQUID IIIB.
MAX QUANTITY PER CONTROL AREA 13,200 GALLONS PER
FLORIDA FIRE PREVENTION CODE TABLE 60.1.26.1

CONSTRUCTION TYPE:

TYPE II–B
UNPROTECTED (UNSPRINKLERED) (PER FBC 602.2)
MAXIMUM NUMBER OF STORIES = 3 (PER FBC TABLE 503)
ACTUAL NUMBER OF STORIES = 1
MAXIMUM AREA (PER FLOOR) = 23,000 SF (PER FBC TABLE 503)
ACTUAL AREA = 1ST FLOOR 1100 SF < 23,000 SF
MAXIMUM BUILDING HEIGHT =55' (PER FBC TABLE 503)
ACTUAL BUILDING HEIGHT = 31'< 55'

OCCUPANT LOAD:

TOTAL OCCUPANT LOAD = 4 (300 PER SF)
CHEMICAL STORAGE FACILITY

EGRESS CAPACITY:

EGRESS CAPACITY EXCEEDS OCCUPANT LOAD.

0.2 INCHES PER OCCUPANT (FBC TABLE 1005.1) AT DOORS

MINIMUM CLEAR OPENING OF EXIT DOORS = 32 INCHES
(FBC 1008.1.1)

1.) OTHER COMPONENTS
BUILDING – 4 OCCUPANTS x 0.2 = 0.8" < 36"

EXIT ACCESS TRAVEL DISTANCE:

STORAGE GROUP "S–1" WITHOUT SPRINKLER SYSTEM
MAXIMUM TRAVEL DISTANCE TO EXIT = 300 FT. (PER FBC TABLE 1015.1)

EXIT ACCESS COMMON PATH OF TRAVEL:

STORAGE GROUP "S–1" WITHOUT SPRINKLER SYSTEM
COMMON PATH OF TRAVEL = 50 FT. (PER FBC 1028.3)

EXIT ACCESS SPACES W/ ONE MEANS OF EGRESS:

STORAGE GROUP "S–1" WITHOUT SPRINKLER SYSTEM
OCCUPANCY GROUP "F" = 50 PERSONS (PER FBC 1014.1)

FIRE PROTECTION REQUIREMENTS:

| (PER FBC, 2010, TABLE 601) | "0 HRS" |
|---|---|
| STRUCTURAL FRAME | "0 HRS" |
| BEARING WALLS (INT) | "0 HRS" |
| (EXT) | "0 HRS" |
| BEARING WALLS (EXT) | (SEPARATION >30') |
| NON–BEARING WALLS (EXT) | NA |
| CONTROL ROOM | "2 HR" |
| FLOOR CONSTRUCTION | "0 HR" |
| ROOF CONSTRUCTION | "0 HR" |

FIRE EXTINGUISHER REQUIREMENTS:

GROUP F–3 BLDG. STORAGE, SPECIAL PURPOSE (LOW HAZARD) CLASS A,B,C PER NFPA 10
FLORIDA FIRE PROTECTION CODE (BASED ON NFPA 1, FIRE CODE, 2009 EDITION AND NFPA 101, LIFE SAFETY CODE, 2009 EDITION)
FIRE EXTINGUISHER: 20lb/ 20A–120BC – DRY CHEMICAL DESIGN
CRITERIA: FLOOR AREA = N/A – TRAVEL DISTANCE = 50 FT.

CONTROL ROOMS:

(2) PROVIDED, ONE FOR AQUEOUS AMMONIA AND ONE FOR FLUORIDE ROOM

## LIFE SAFETY LEGEND

- ENTRANCE/EXIT
- DIRECTION OF TRAVEL
- MOST REMOTE POINT
- FE FIRE EXTINGUISHER
- EMERGENCY LIGHT FIXTURE
- DECORATIVE EMERGENCY LIGHT FIXTURE
- 2–HOUR FIRE RATED CMU WALL
- EXIT SIGN
- EXIT SIGN WALLMOUNT

| NO. | DATE | ISSUED FOR | BY |
|---|---|---|---|

DESIGNED W.H.R.
DRAWN A.L.B.
CHECKED W.H.R.
PROJ. ENGR. G.A.B.

DEAN AVERY WALDROP R.A.
No. 93380

HAZEN AND SAWYER
Environmental Engineers & Scientists
4000 Hollywood Boulevard, Suite 750N
Hollywood, Florida 33021
Certificate of Authorization Number: 2771

SCALE –

CLIENTS PROJECT: –
ENGINEERS PROJECT: 44238–004
CAD REFERENCE: 44238–004BP3–A17

NORTH MIAMI FLORIDA
CITY OF NORTH MIAMI
PUBLIC WORKS UTILITIES

WINSON WATER TREATMENT PLANT
BID PACKAGE 3: WTP REHABILITATION
CHEMICAL HANDLING FACILITY
LIFE SAFETY PLAN

DATE: JUNE 2014
SHEET: 206 OF 335
DRAWING: A–17

PERMITTING

PLOT DATE: 6/10/2014 9:58 AM BY: HSCALIT

XREFs= ..\Tblock\44238–004–BP3–TB,..\Base–BP3\S–BP3–ChemHand–Plan,..\Base–BP3\M–BP3–ChemHand–Plan

File = H:\44238–004\Drawings\Bid Package 3 – WTP Rehab\Arch\44238–004BP3–A17 Saved by abisha Save date = 6/9/2014 5:04 PM

**NOTES:**

1. SEE DRAWING S-30 FOR WALL, WALL OPENING AND STAIR DIMENSIONS.
2. NEW MASONRY FACES SHALL RECEIVE A STUCCO FINISH TO MATCH SURFACE TEXTURE AND LINES OF ADJACENT SURFACES.
3. EXTERIOR CHATTAHOOCHIE FINISH SHALL BE SEALED AFTER MASONRY JOINTS ARE REPOINTED. SEALER SHALL BE WET-LOOK BY SEALKRETE OR APPROVED EQUAL.

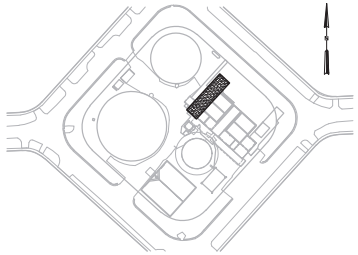

LOCATION MAP

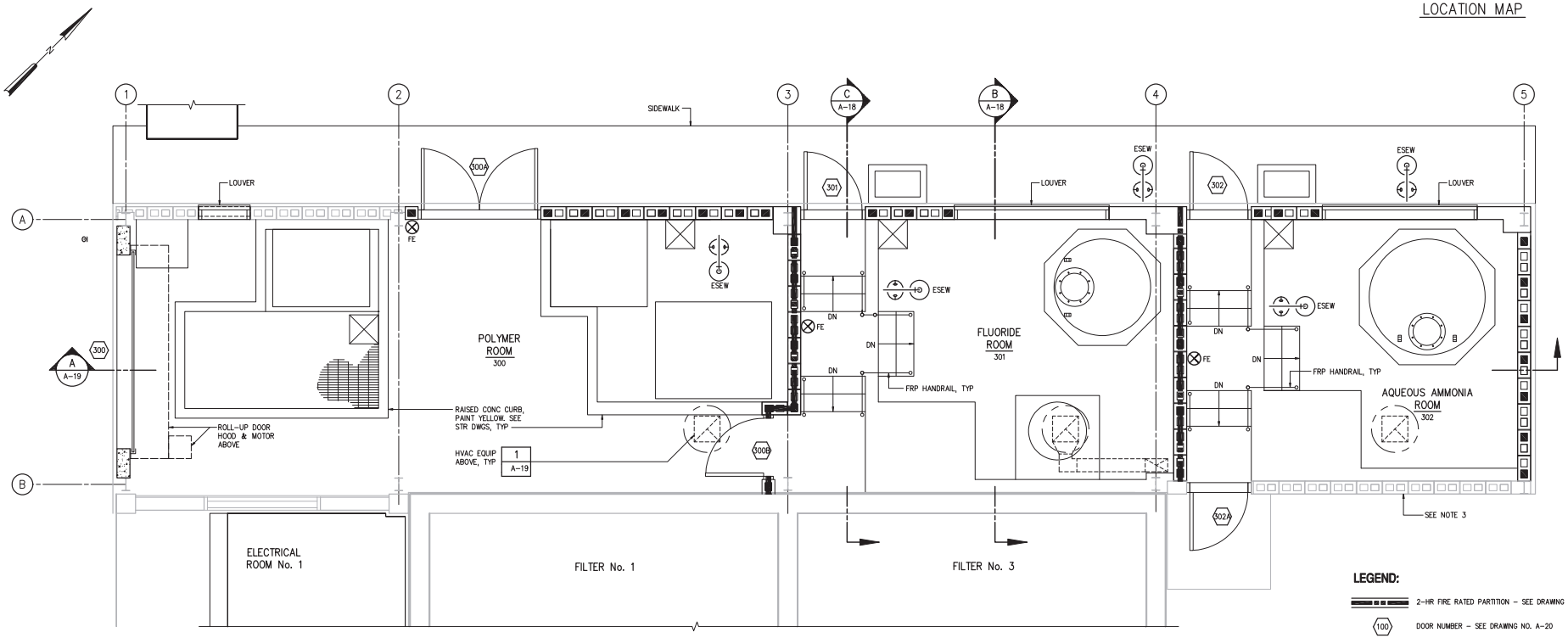


FLOOR PLAN
3/8" = 1'-0"

**LEGEND:**

- 2-HR FIRE RATED PARTITION – SEE DRAWING NO. A-26
- 100 DOOR NUMBER – SEE DRAWING NO. A-20
- FE FIRE EXTINGUISHER – DRY CHEMICAL
- W-1 FIRE EXTINGUISHER CABINET – DRY CHEMICAL
- P1 PARTITION TYPE – SEE DRAWING NO. A-24

| NO. | DATE | ISSUED FOR | BY |
|---|---|---|---|

DESIGNED W.H.R.
DRAWN A.L.B.
CHECKED W.H.R.
PROJ. ENGR. G.A.B.

DEAN AVERY WALDROP R.A. No. 93380

HAZEN AND SAWYER
Environmental Engineers & Scientists
4000 Hollywood Boulevard, Suite 750N
Hollywood, Florida 33021
Certificate of Authorization Number: 2771

SCALE –

CLIENTS PROJECT: –
ENGINEERS PROJECT: 44238-004
CAD REFERENCE: 44238-004BP3-A18

CITY OF NORTH MIAMI
PUBLIC WORKS UTILITIES

WINSON WATER TREATMENT PLANT
BID PACKAGE 3: WTP REHABILITATION
CHEMICAL HANDLING FACILITY
PROPOSED PLAN

DATE: JUNE 2014
SHEET: 207 OF 335
DRAWING: A-18

PERMITTING

PLOT DATE: 6/10/2014 10:00 AM BY: HSCALIT

XREFs= ..\Tblock\44238-004-BP3-TB,..\Base-BP3\S-BP3-ChemHand-Plan,..\Base-BP3\M-BP3-ChemHand-Plan,..\Base-BP3\H-BP3-ChemHand-Plan

File = H:\44238-004\Drawings\Bid Package 3 - WTP Rehab\Arch\44238-004BP3-A18 Saved by abisha Save date = 6/9/2014 7:50 PM

**NOTES:**

1. NOT ALL OBJECTS BEYOND ARE SHOWN.

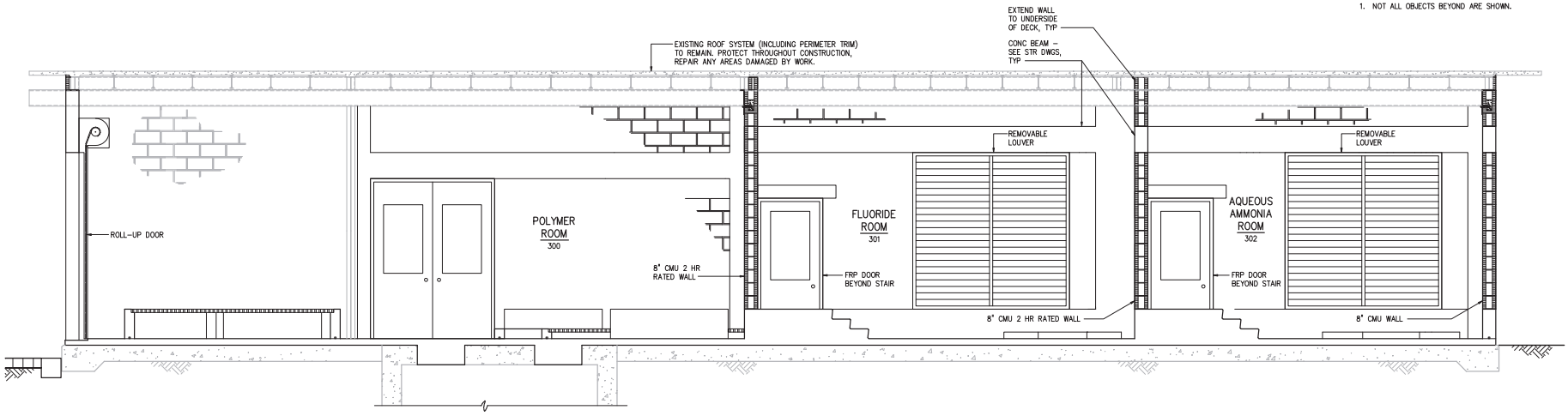


NOTE: FRP HANDRAIL NOT SHOWN FOR CLARITY

**SECTION** A / A-18
3/8" = 1'-0"

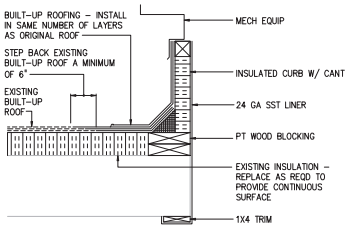


ROOF EQUIPMENT CURB

**DETAIL** 1 / A-18
1 1/2" = 1'-0"

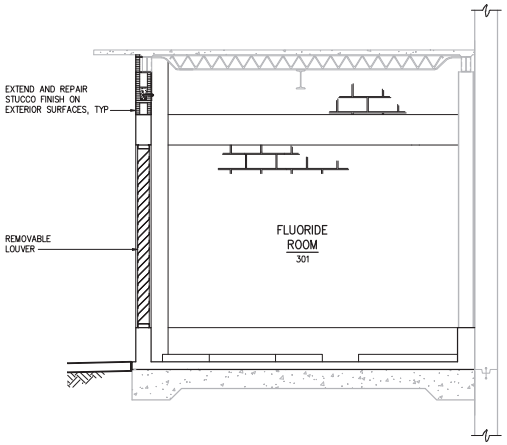


**SECTION** B / A-18
3/8" = 1'-0"

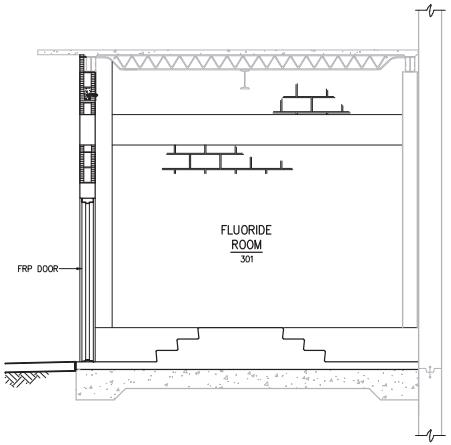


NOTE: FRP HANDRAIL NOT SHOWN FOR CLARITY

**SECTION** C / A-18
3/8" = 1'-0"

| NO. | DATE | ISSUED FOR | BY |
|---|---|---|---|

DESIGNED W.H.R.
DRAWN A.L.B.
CHECKED W.H.R.
PROJ. ENGR. G.A.B.

DEAN AVERY WALDROP R.A.
No. 93380

**HAZEN AND SAWYER**
Environmental Engineers & Scientists
4000 Hollywood Boulevard, Suite 750N
Hollywood, Florida 33021
Certificate of Authorization Number: 2771

SCALE –

CLIENTS PROJECT: –
ENGINEERS PROJECT: 44238-004
CAD REFERENCE: 44238-004BP3-A19

NORTH MIAMI FLORIDA
**CITY OF NORTH MIAMI**
**PUBLIC WORKS UTILITIES**

WINSON WATER TREATMENT PLANT
BID PACKAGE 3: WTP REHABILITATION

CHEMICAL HANDLING FACILITY
SECTIONS AND DETAILS

DATE: JUNE 2014
SHEET: 208 OF 335
DRAWING: A-19

PERMITTING

PLOT DATE: 6/10/2014 10:03 AM BY: HSCALI

XREFs= ..\Tblock\44238-004-BP3-TB,..\Base-BP3\S-BP3-ChemHand-Sections,..\Arch Details\A-SD-35-Roof Curb

File = H:\44238-004\Drawings\Bid Package 3 - WTP Rehab\Arch\44238-004BP3-A19 Saved by dblaha Save date = 6/9/2014 8:58 PM

## ROOM FINISH SCHEDULE

| NO. | DESCRIPTION | FLOOR | | BASE | | WALL-NORTH | | WALL-EAST | | WALL-SOUTH | | WALL-WEST | | CEILING | | | REMARKS |
|---|---|---|---|---|---|---|---|---|---|---|---|---|---|---|---|---|---|
| | | SUBSTRATE | FINISH | SUBSTRATE | FINISH | SUBSTRATE | FINISH | SUBSTRATE | FINISH | SUBSTRATE | FINISH | SUBSTRATE | FINISH | SUBSTRATE | FINISH | HEIGHT | |
| CHEMICAL HANDLING FACILITY – SEE DRAWING A-18 | | | | | | | | | | | | | | | | | |
| 300 | POLYMER ROOM | CONC | SEALER | CONC/CMU | PT | CONC/CMU | PT | CONC/CMU | PT | EX CONC | PT | CONC/CMU | PT | EXP | PT | 12'-8" | NOTE 1 |
| 301 | FLUORIDE ROOM | CONC | SEALER | CONC/CMU | PT | CONC/CMU | PT | CONC/CMU | PT | EX CONC | PT | CONC/CMU | PT | EXP | PT | 12'-8" | NOTE 1 |
| 302 | AQUEOUS AMMONIA RM | CONC | SEALER | CONC/CMU | PT | CONC/CMU | PT | CONC/CMU | PT | EX CMU | PT | CONC/CMU | PT | EXP | PT | 12'-8" | NOTE 1 |

### FINISH LEGEND

| | | | |
|---|---|---|---|
| CL | CONTAINMENT LINER | EXP | EXPOSED STRUCTURE |
| CMU | CONCRETE MASONRY UNIT | MFR | MANUFACTURER'S SPECIFIED FINISH |
| CONC | CONCRETE | PT | PAINT |

### ROOM FINISH SCHEDULE NOTES

1. CONTAINMENT LINER IN CHEMICAL CONTAINMENT AREAS.

## DOOR SCHEDULE

| NO. | FRAME | | DOOR | | | | | DETAILS | | | GLAZING | LOUVER | FIRE LABEL | FINISH | HDWR NO | THRSHLD | WIND PRESSURE | | REMARKS |
|---|---|---|---|---|---|---|---|---|---|---|---|---|---|---|---|---|---|---|---|
| | TYPE | MATL | TYPE | MATL | WIDTH | HEIGHT | THICKNESS | HEAD | JAMB | SILL | | | | | | | NEG. | POS. | |
| CHEMICAL HANDLING FACILITY – SEE DRAWING A-18 | | | | | | | | | | | | | | | | | | | |
| 300 | MFR | STEEL | C | AL | 10'-0" | 9'-7" | 3/4" | 3/A-20 | 3/A-20 | 3/A-20 | MFR | -- | -- | MFR | MFR | -- | 38 PSF | 34 PSF | NOTES 1,2 |
| 300A | F-1 | FRP | B | FRP | (2) 3'-0" | 8'-0" | 1 3/4" | 2/A-20 | 2/A-20 | 2/A-20 | IG | -- | -- | MFR | 4 | AL | 40 PSF | 36 PSF | |
| 300B | F-1 | FRP | A | FRP | 3'-0" | 7'-0" | 1 3/4" | 1/A-20 | 1/A-20 | 1/A-20 | FG | -- | 90 MIN | MFR | 3 | -- | -- | -- | |
| 301 | F-1 | FRP | B | FRP | 3'-0" | 7'-0" | 1 3/4" | 1/A-20 | 1/A-20 | 1/A-20 | IG | -- | -- | MFR | 3 | AL | 41 PSF | 38 PSF | |
| 302 | F-1 | FRP | B | FRP | 3'-0" | 7'-0" | 1 3/4" | 1/A-20 | 1/A-20 | 1/A-20 | IG | -- | -- | MFR | 3 | AL | 41 PSF | 38 PSF | |
| 302A | F-1 | FRP | B | FRP | 3'-0" | 7'-0" | 1 3/4" | 1/A-20 | 1/A-20 | 1/A-20 | IG | -- | -- | MFR | 3 | AL | 41 PSF | 38 PSF | |

### DOOR LEGEND

| | | | |
|---|---|---|---|
| AL | ALUMINUM | PT | PAINT |
| FG | FIRE GLASS | STL | STEEL |
| FRP | FIBERGLASS REINFORCED PLASTIC | TG | TEMPERED GLASS |
| IG | INSULATING GLASS | | |
| MFR | MANUFACTURER'S STANDARD | | |

### DOOR SCHEDULE NOTES

1. PROVIDE MOTORIZED DOOR OPERATOR. SEE ELEC DRAWINGS.
2. PAINT FRAME.

### FRAME TYPES 1/4" = 1'-0"

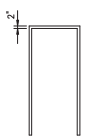


F-1

### DOOR TYPES 1/4" = 1'-0"

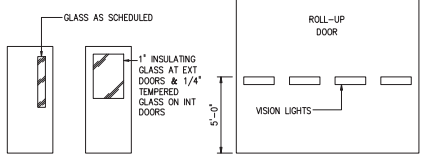


A B C

### FRAME PROFILES 3" = 1'-0"

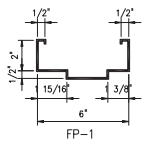


FP-1

### THRESHOLD TYPES 3" = 1'-0"

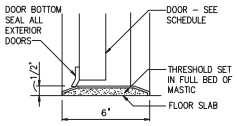


AL

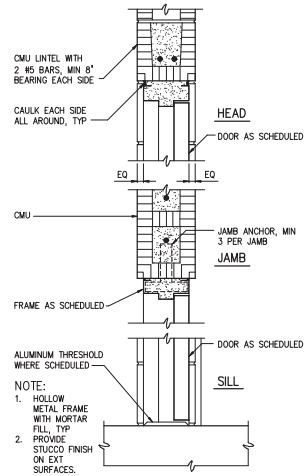


SINGLE DOOR

**DETAIL** 1 (1 1/2" = 1'-0", A-20)

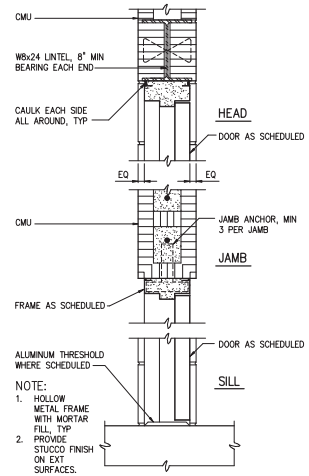


DOUBLE DOOR

**DETAIL** 2 (1 1/2" = 1'-0", A-20)

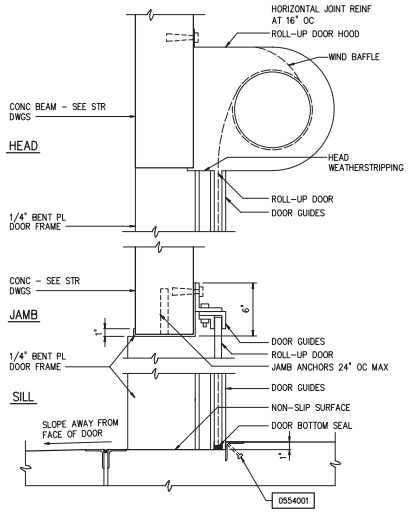


ROLL-UP DOOR

**DETAIL** 3 (1 1/2" = 1'-0", A-20)

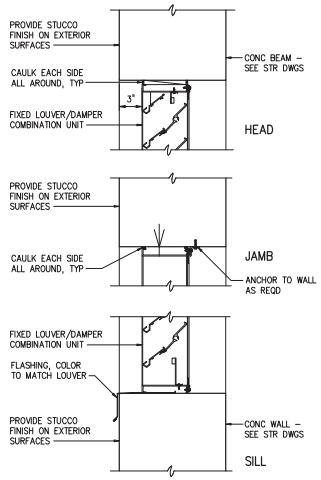


LOUVER

**DETAIL** 4 (1 1/2" = 1'-0", A-20)

| NO. | DATE | ISSUED FOR | BY |
|---|---|---|---|
| 1 | 4/1/14 | 100% QA COMMENTS | H.J.V. |

DESIGNED W.H.R.
DRAWN A.L.B.
CHECKED W.H.R.
PROJ. ENGR. G.A.B.

DEAN AVERY WALDROP R.A. No. 93380

HAZEN AND SAWYER
Environmental Engineers & Scientists
4000 Hollywood Boulevard, Suite 750N
Hollywood, Florida 33021
Certificate of Authorization Number: 2771

SCALE –

CLIENTS PROJECT: –
ENGINEERS PROJECT: 44238-004
CAD REFERENCE: 44238-004BP3-A20

NORTH MIAMI FLORIDA
CITY OF NORTH MIAMI
PUBLIC WORKS UTILITIES

WINSON WATER TREATMENT PLANT
BID PACKAGE 3: WTP REHABILITATION
CHEMICAL HANDLING FACILITY SCHEDULES AND DETAILS

DATE: JUNE 2014
SHEET: 209 OF 335
DRAWING: A-20

PERMITTING

PLOT DATE: 6/10/2014 10:05 AM BY: HSCALI

XREFs= ..\Tblock\44238-004-BP3-TB,..\Arch Details\A-SD-01-Door Details,..\Arch Details\A-SD-02-WINDOW&LOUVER-DETAILS

File = H:\44238-004\Drawings\Bid Package 3 - WTP Rehab\Arch\44238-004BP3-A20 Saved by HsCali2 Save date = 6/9/2014 8:55 PM

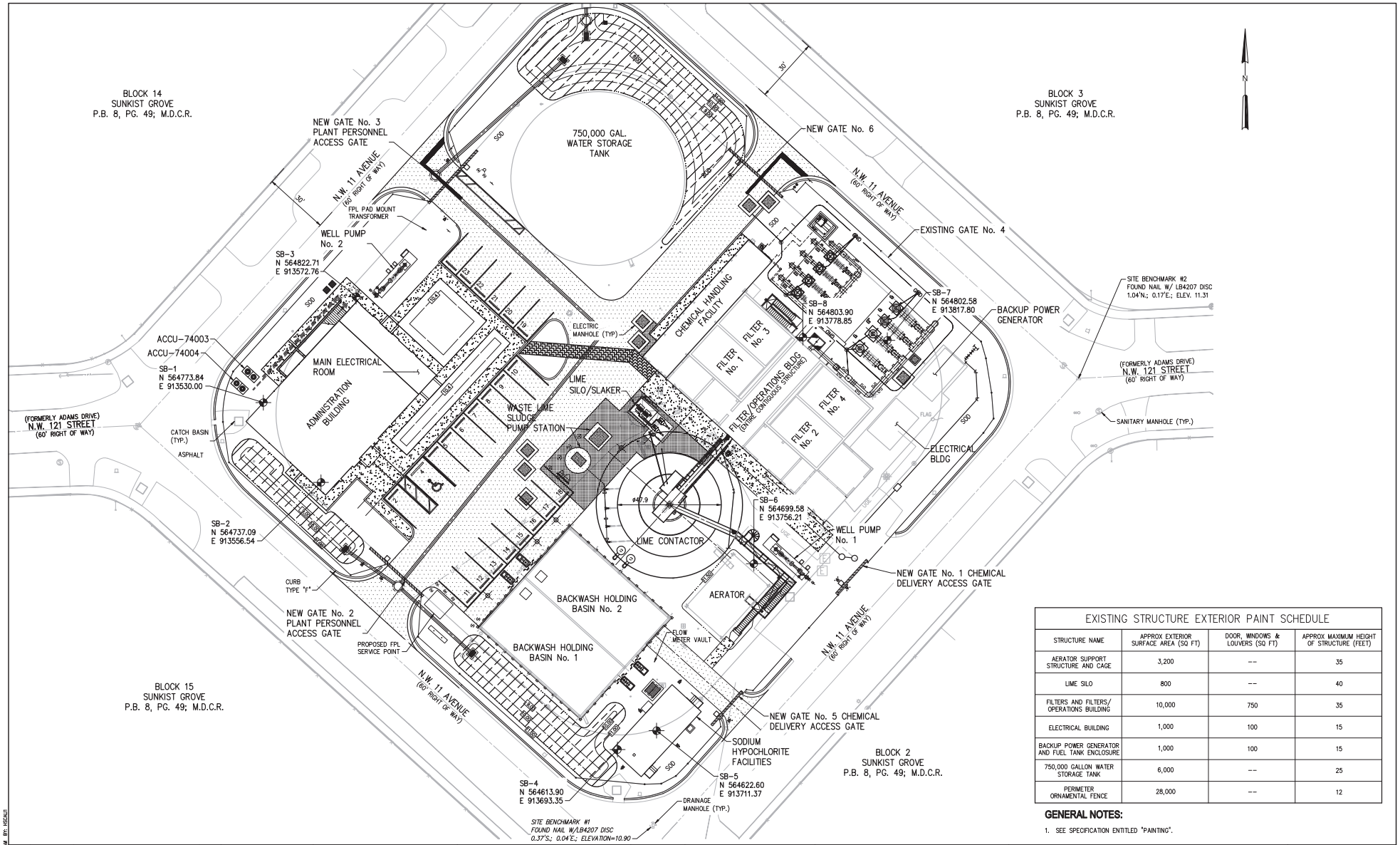


| EXISTING STRUCTURE EXTERIOR PAINT SCHEDULE | | | |
|---|---|---|---|
| STRUCTURE NAME | APPROX EXTERIOR SURFACE AREA (SQ FT) | DOOR, WINDOWS & LOUVERS (SQ FT) | APPROX MAXIMUM HEIGHT OF STRUCTURE (FEET) |
| AERATOR SUPPORT STRUCTURE AND CAGE | 3,200 | -- | 35 |
| LIME SILO | 800 | -- | 40 |
| FILTERS AND FILTERS/ OPERATIONS BUILDING | 10,000 | 750 | 35 |
| ELECTRICAL BUILDING | 1,000 | 100 | 15 |
| BACKUP POWER GENERATOR AND FUEL TANK ENCLOSURE | 1,000 | 100 | 15 |
| 750,000 GALLON WATER STORAGE TANK | 6,000 | -- | 25 |
| PERIMETER ORNAMENTAL FENCE | 28,000 | -- | 12 |

**GENERAL NOTES:**

1. SEE SPECIFICATION ENTITLED "PAINTING".

| NO. | DATE | ISSUED FOR | BY |
|---|---|---|---|

DESIGNED W.H.R.
DRAWN A.L.B.
CHECKED W.H.R.
PROJ. ENGR. G.A.B.

DEAN AVERY WALDROP P.E.
No. 93380

**HAZEN AND SAWYER**
Environmental Engineers & Scientists
4000 Hollywood Boulevard, Suite 750N
Hollywood, Florida 33021
Certificate of Authorization Number: 2771

SCALE –

CLIENTS PROJECT: –
ENGINEERS PROJECT: 44238-004
CAD REFERENCE: 44238-004BP3-A21

NORTH MIAMI FLORIDA
**CITY OF NORTH MIAMI**
**PUBLIC WORKS UTILITIES**

WINSON WATER TREATMENT PLANT
BID PACKAGE 3: WTP REHABILITATION
EXISTING WTP EXTERIOR PAINTING

DATE: JUNE 2014
SHEET: 210 OF 335
DRAWING: A-21

PERMITTING

PLOT DATE: 6/10/2014 10:08 AM BY: HSCALI

File = H:\44238-004\Drawings\Bid Package 3 - WTP Rehab\Arch\44238-004BP3-A21 Saved by HScalli Save date = 6/9/2014 6:25 PM

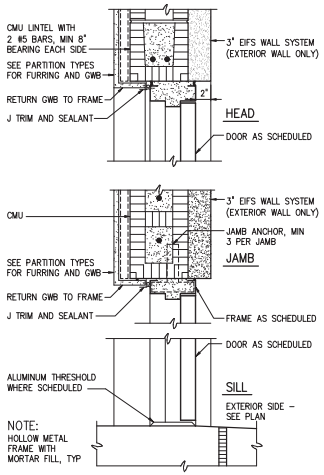


EXTERIOR SINGLE DOOR

**DETAIL** 1 (A-01) 1 1/2" = 1'-0"

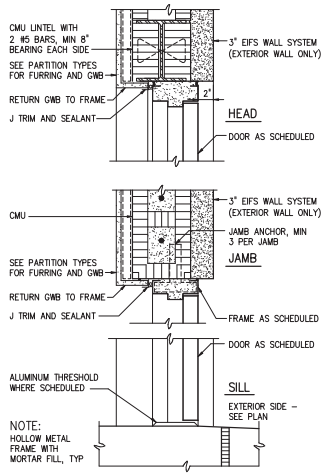


EXTERIOR DOUBLE DOOR

**DETAIL** 2 (A-01) 1 1/2" = 1'-0"

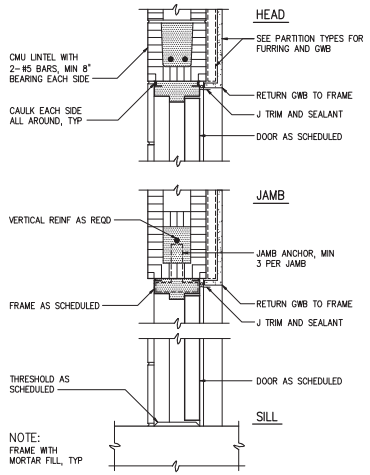


INTERIOR SINGLE DOOR

**DETAIL** 3 (A-01) 1 1/2" = 1'-0"

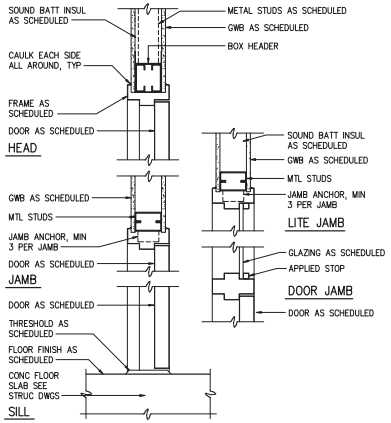


INTERIOR DOOR IN METAL STUD

**DETAIL** 4 (A-01) 1 1/2" = 1'-0"

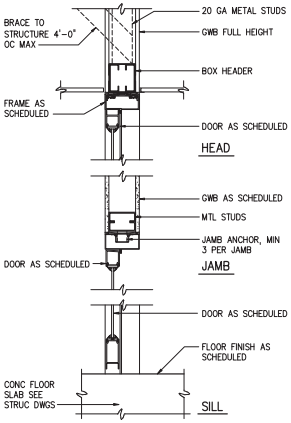


INTERIOR DOOR IN STOREFRONT

**DETAIL** 5 (A-01) 1 1/2" = 1'-0"

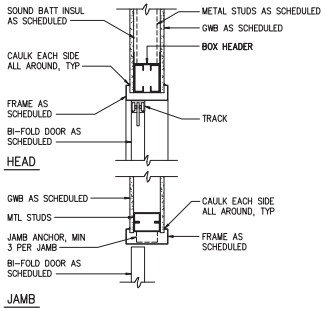


INTERIOR BI-FOLD DOOR

**DETAIL** 6 (A-01) 1 1/2" = 1'-0"

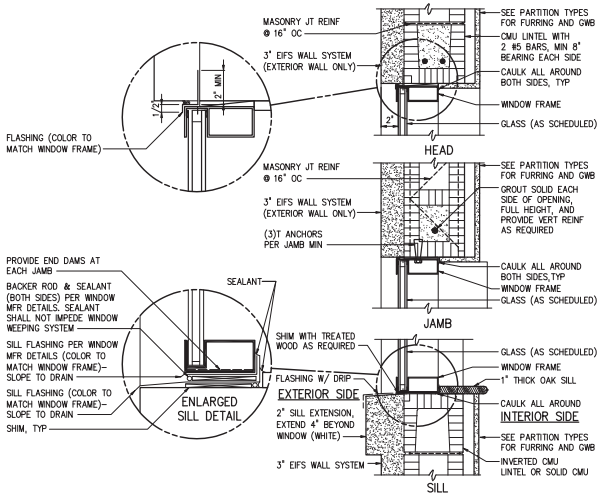


EXTERIOR WINDOW

**DETAIL** 7 (A-22) 1 1/2" = 1'-0"

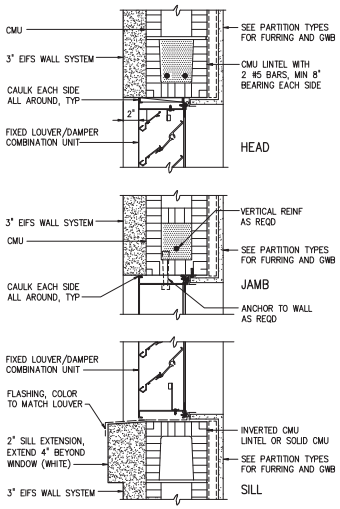


LOUVER

**DETAIL** 8 (A-22) 1 1/2" = 1'-0"

| NO. | DATE | ISSUED FOR | BY |
|---|---|---|---|
| 1 | 4/1/14 | 100% QA COMMENTS | H.J.V. |

DESIGNED W.H.R.
DRAWN A.L.B.
CHECKED W.H.R.
PROJ. ENGR. G.A.B.

DEAN AVERY WALDROP R.A.
No. 93380

**HAZEN AND SAWYER**
Environmental Engineers & Scientists
4000 Hollywood Boulevard, Suite 750N
Hollywood, Florida 33021
Certificate of Authorization Number: 2771

SCALE –

CLIENTS PROJECT: –
ENGINEERS PROJECT: 44238-004
CAD REFERENCE: 44238-004BP3-A22

NORTH MIAMI FLORIDA
**CITY OF NORTH MIAMI**
**PUBLIC WORKS UTILITIES**

WINSON WATER TREATMENT PLANT
BID PACKAGE 3: WTP REHABILITATION

STANDARD ARCHITECTURAL DETAILS
SHEET 1

DATE: JUNE 2014
SHEET: 211 OF 335
DRAWING: A-22

PERMITTING

PLOT DATE: 6/10/2014 10:39 AM BY: HSCALI

XREFs= ..\Tblock\44238-004-BP3-TB,..\Arch Details\A-SD-01-Door Details,..\Arch Details\D418000

File = H:\44238-004\Drawings\Bid Package 3 - WTP Rehab\Arch\44238-004BP3-A22 Saved by HsCali2 Save date = 6/9/2014 7:11 PM

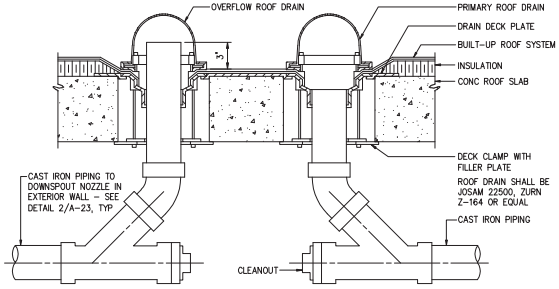


ALL ROOFING DETAILS SHALL BE IN ACCORDANCE WITH MANUFACTURER'S RECOMMENDATIONS AND MIAMI DADE COUNTY NOA

ROOF DRAIN

**DETAIL** 1 / A-23
NTS

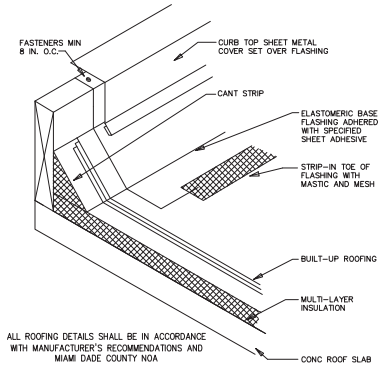


ALL ROOFING DETAILS SHALL BE IN ACCORDANCE WITH MANUFACTURER'S RECOMMENDATIONS AND MIAMI DADE COUNTY NOA

CURB FLASHING

**DETAIL** 5 / A-23
NTS

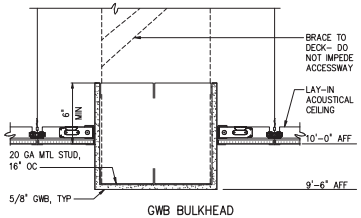


GWB BULKHEAD

**DETAIL** 6 / A-07
1 1/2" = 1'-0"

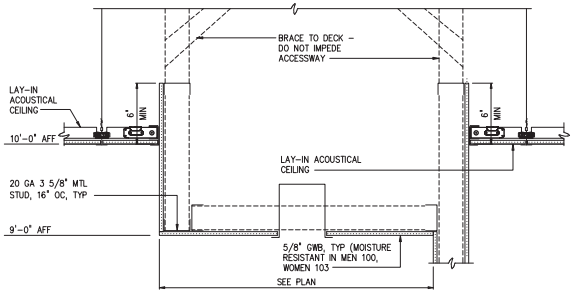


GWB SOFFIT

**DETAIL** 7 / A-06
1 1/2" = 1'-0"

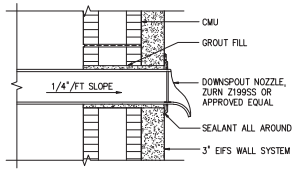


OVERFLOW NOZZLE

**DETAIL** 2 / A-23
1 1/2" = 1'-0"

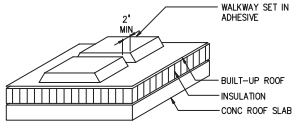


PAVER WALKWAY PROTECTION
BUILT-UP ROOFING

0753411
NTS

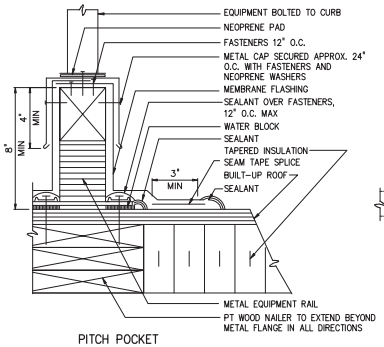


PITCH POCKET
BUILT-UP ROOFING

0753214
3"=1'-0"

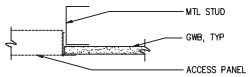


ACCESS PANEL IN GWB WALL

**DETAIL** 8 / A-23
3" = 1'-0"

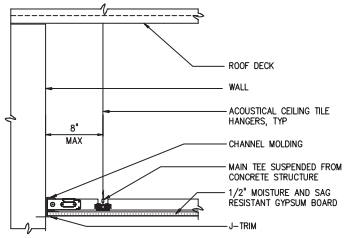


GWB CEILING AT WALL

**DETAIL** 9 / A-23
1 1/2" = 1'-0"

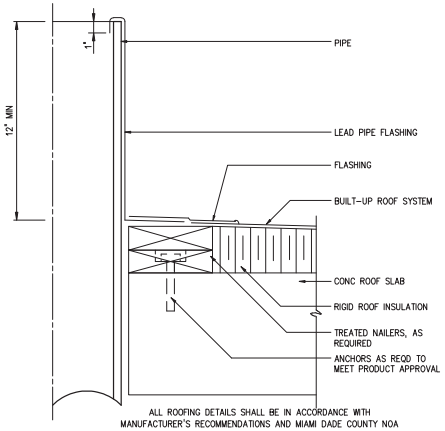


ALL ROOFING DETAILS SHALL BE IN ACCORDANCE WITH MANUFACTURER'S RECOMMENDATIONS AND MIAMI DADE COUNTY NOA

PIPE THRU ROOF

**DETAIL** 4 / A-23
NTS

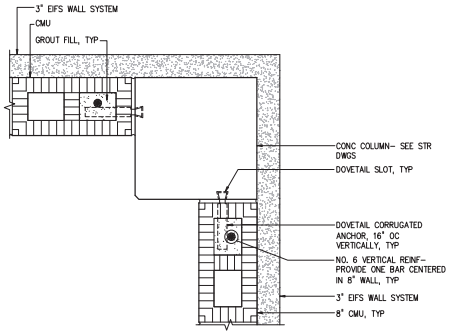


TYPICAL COLUMN

**DETAIL** 10 / A-03
1 1/2" = 1'-0"

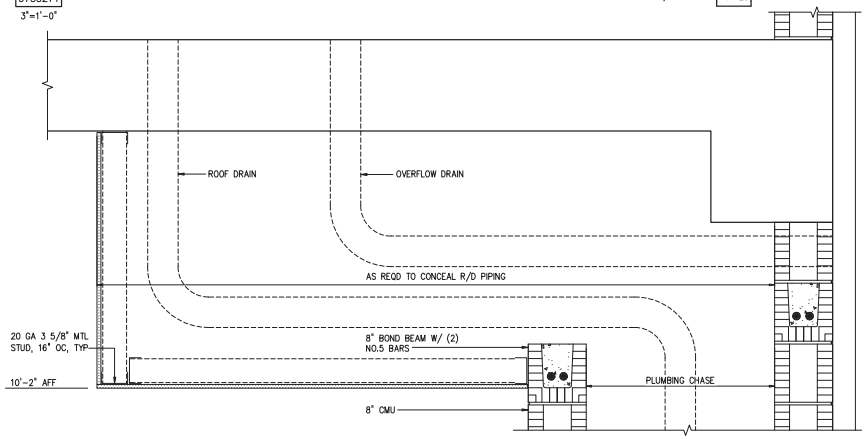


ROOF DRAIN FURR DOWN AND CHASE

**DETAIL** 11 / A-23
1 1/2" = 1'-0"

| NO. | DATE | ISSUED FOR | BY |
|---|---|---|---|
| 1 | 4/1/14 | 100% QA COMMENTS | H.J.V. |

DESIGNED W.H.R.
DRAWN A.L.B.
CHECKED W.H.R.
PROJ. ENGR. G.A.B.

DEAN AVERY WALDROP R.A.
No. 93380

**HAZEN AND SAWYER**
Environmental Engineers & Scientists
4000 Hollywood Boulevard, Suite 750N
Hollywood, Florida 33021
Certificate of Authorization Number: 2771

SCALE –

CLIENTS PROJECT: –
ENGINEERS PROJECT: 44238-004
CAD REFERENCE: 44238-004BP3-A23

NORTH MIAMI FLORIDA
CITY OF NORTH MIAMI
PUBLIC WORKS UTILITIES

WINSON WATER TREATMENT PLANT
BID PACKAGE 3: WTP REHABILITATION
STANDARD ARCHITECTURAL DETAILS
SHEET 2

DATE: JUNE 2014
SHEET: 212 OF 335
DRAWING: A-23

PERMITTING

PLOT DATE: 6/10/2014 10:12 AM BY: HSCALIT

XREFs= ..\Block\44238-004-BP3-TB,\Arch Details\A-SD-02-ROOF DRAIN,\Arch Details\0753411R,\Arch Details\A-SD-03-OVERFLOW,\Arch Details\0750006R,\Arch Details\A-SD-07 Stucco Reveal,\Arch Details\SD-A-R1-CURB FLASHING,\Arch Details\A-SD-24-Ceiling Details,\Arch Details\A-SD-23-Ceiling-Bulkheads,\Arch Details\A-SD-08 Column Detail,..\Base-BP3\A-BP3-Admin-Section-A,\Arch Details\SD-A-R5-Pitch-Pocket

File = H:\44238-004\Drawings\Bid Package 3 - WTP Rehab\Arch\44238-004BP3-A23 Saved by HsCal2 Save date = 6/9/2014 7:14 PM

## PARTITION TYPES (NOTE: SEE DRAWING A-26 FOR FIRESTOPPING DETAILS)

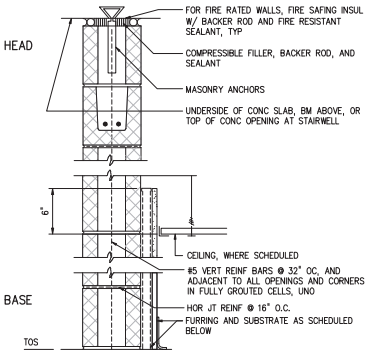


| TYPE | PLAN SIZE / MASONRY SIZE / WIDTH | HEIGHT / GAUGE | INSUL. STC RATING | FIRE RATING / TEST DESIGN | REMARKS |
|---|---|---|---|---|---|

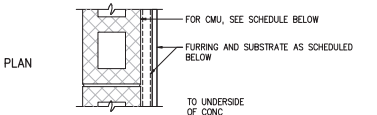


| | | | | | |
|---|---|---|---|---|---|
| A1 | 8" / 7 5/8" | TO UNDERSIDE OF CONC SLAB: N/A | NONE: N/A | 1HR: UL U419 | NON-LOAD BEARING |
| A1.2 | 8" / 7 5/8" | TO UNDERSIDE OF CONC SLAB: N/A | NONE: N/A | 2HR: UL U419 | NON-LOAD BEARING |
| A2 | 1 1/2", 5/8", 8" / 7 5/8" / 9 3/4" | TO UNDERSIDE OF CONC SLAB: N/A | NONE: N/A | 1HR: UL U419 | NON-LOAD BEARING |
| A3 | 1 1/2", 5/8", 8" / 7 5/8" / 9 3/4" | TO UNDERSIDE OF CONC SLAB: N/A | NONE: N/A | 2HR: U419 | NON-LOAD BEARING |
| A4 | 1 1/2", 5/8", 8" / 7 5/8" / 9 3/4" | TO UNDERSIDE OF CONC SLAB: N/A | NONE: N/A | NONE | NON-LOAD BEARING |
| A5 | 3 1/2", 5/8", 8" / 7 5/8" / 11 3/4" | TO UNDERSIDE OF CONC SLAB: N/A | NONE: N/A | NONE | NON-LOAD BEARING |

### A MASONRY WALL

SCALE: 1 1/2" = 1'-0"

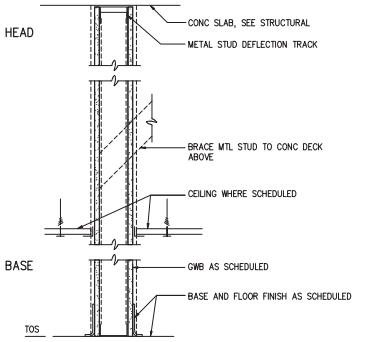


| TYPE | STUD SIZE / SPACING / WIDTH | HEIGHT / GAUGE | INSUL. STC RATING | FIRE RATING / TEST DESIGN | REMARKS |
|---|---|---|---|---|---|

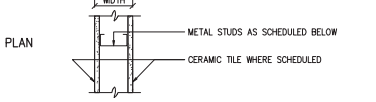


| | | | | | |
|---|---|---|---|---|---|
| B1 | 5/8", 3 5/8", 5/8", 16" O.C., 4 7/8" | TO UNDERSIDE OF CONC SLAB: 20 | NONE: N/A | NONE: N/A | GWB TO 6" ABOVE CLG NON-LOAD BEARING |
| B2 | 5/8", 3 5/8", 5/8", 16" O.C., 4 7/8" | TO UNDERSIDE OF CONC SLAB: 20 | NONE: N/A | NONE: N/A | GWB FULL HEIGHT NON-LOAD BEARING |
| B3 | 5/8", 6 5/8", 5/8", 16" O.C., 7 7/8" | TO UNDERSIDE OF CONC SLAB: 20 | NONE: N/A | NONE: N/A | GWB FULL HEIGHT NON-LOAD BEARING |
| B4 | 5/8", 3 5/8", 5/8", 16" O.C., 4 7/8" | TO UNDERSIDE OF CONC SLAB: 20 | NONE: N/A | 1HR: U419 | GWB FULL HEIGHT NON-LOAD BEARING / FIRE RESISTANT GWB |

### B STUD WALL

SCALE: 1 1/2" =1'-0"

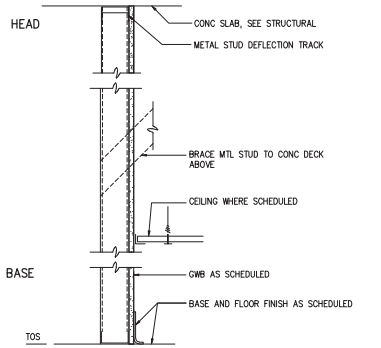


| TYPE | STUD SIZE / SPACING / WIDTH | HEIGHT / GAUGE | INSUL. STC RATING | FIRE RATING / TEST DESIGN | REMARKS |
|---|---|---|---|---|---|

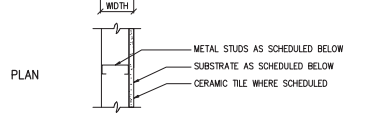


| | | | | | |
|---|---|---|---|---|---|
| C1 | 3 5/8", 5/8", 16" OC, 4 1/4" | UNDERSIDE OF MTL DECK: 20 | NONE: N/A | NONE | GWB TO 6" ABOVE CLG NON-LOAD BEARING |
| C2 | 3 5/8", 5/8", 16" OC, 4 1/4" | UNDERSIDE OF MTL DECK: 20 | NONE: N/A | NONE | GWB FULL HEIGHT NON-LOAD BEARING |
| C3 | 1", 5/8", 16" OC, 5 1/8" | UNDERSIDE OF MTL DECK: 20 | NONE: N/A | 1HR: U469 | GWB FULL HEIGHT NON-LOAD BEARING / SHAFT WALL |

### C STUD CHASE WALL

SCALE: 1 1/2" =1'-0"

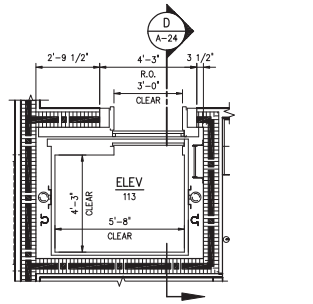


### SECOND FLOOR ELEVATOR PLAN

3/8" = 1'-0"

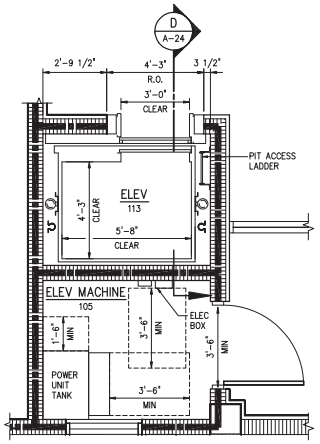


NOTE: COORDINATE SHAFT AND PIT SIZE AND ALL ROUGH OPENINGS AND CLEARANCES WITH ELEVATOR MANUFACTURER PRIOR TO CONSTRUCTING WALLS AND CONCRETE PIT

### FIRST FLOOR ELEVATOR PLAN

3/8" = 1'-0"

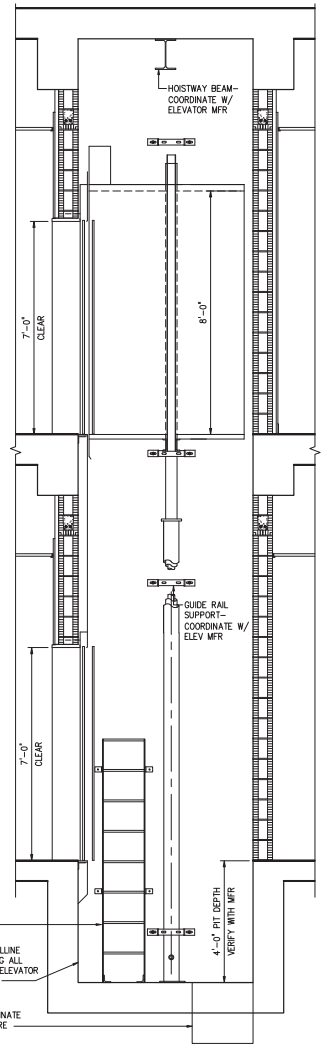


### SECTION

1/2" = 1'-0" (D / A-24)

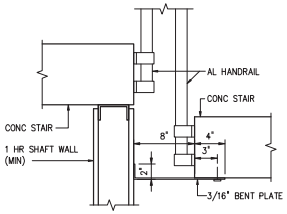


WALL AT UNDERSIDE OF STAIR

### DETAIL (1 / A-03)

1 1/2" = 1'-0"

| NO. | DATE | ISSUED FOR | BY |
|---|---|---|---|
| 1 | 4/1/14 | 100% QA COMMENTS | H.J.V. |

PLOT DATE: 6/10/2014 10:13 AM BY: HSCAJ1

DESIGNED W.H.R.
DRAWN A.L.B.
CHECKED W.H.R.
PROJ. ENGR. G.A.B.

DEAN AVERY WALDROP R.A. No. 93380

**HAZEN AND SAWYER**
Environmental Engineers & Scientists
4000 Hollywood Boulevard, Suite 750N
Hollywood, Florida 33021
Certificate of Authorization Number: 2771

SCALE –

CLIENTS PROJECT: –
ENGINEERS PROJECT: 44238-004
CAD REFERENCE: 44238-004BP3-A24

NORTH MIAMI FLORIDA — CITY OF NORTH MIAMI PUBLIC WORKS UTILITIES

WINSON WATER TREATMENT PLANT
BID PACKAGE 3: WTP REHABILITATION
STANDARD ARCHITECTURAL DETAILS SHEET 3

DATE: JUNE 2014
SHEET: 213 OF 335
DRAWING: A-24

PERMITTING

XREFs= ..\Block\44238-004-BP3-TB,..\Base-BP3\A-BP3-Admin-Section-D,..\Base-BP3\A-BP3-Admin-Plan-Bottom,..\Base-BP3\A-BP3-Admin-Plan-Top,..\Arch Details\A-SD-09-Partition-Types,..\Base-BP3\E-BP3-Admin-Plan-Bottom,..\Arch Details\A-SD-04-Stair-Wall

File = H:\44238-004\Drawings\Bid Package 3 - WTP Rehab\Arch\44238-004BP3-A24 Saved by HsCad2 Save date = 6/9/2014 8:08 PM

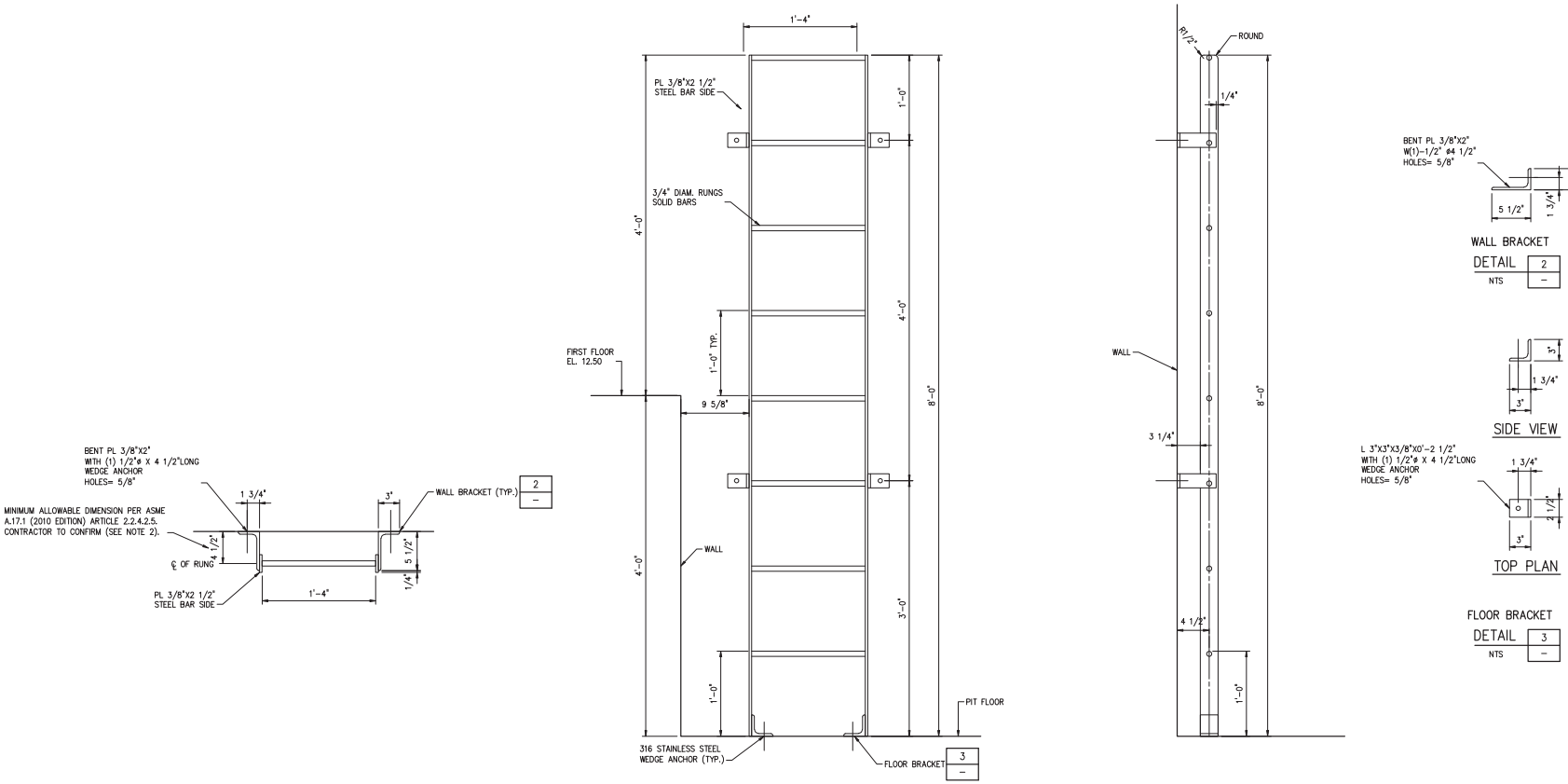


ELEVATOR PIT ACCESS LADDER

DETAIL 1 / A-24

1 1/2"=1'-0"

NOTES:

1. ELEVATOR PIT LADDER SHALL COMPLY WITH ASME A17.1 (LATEST EDITION).
2. PRIOR TO SUBMITTAL OF SHOP DRAWING TO THE ENGINEER, THE CONTRACTOR SHALL MEET WITH AGENCY RESPONSIBLE FOR PERMITTINGS THE ELEVATOR PIT ACCESS LADDER AND CONFIRM THAT THE LADDER PROPOSED FOR CONSTRUCTION MEETS ALL REQUIRMENTS OF THE PERMITTING AGENCY AND ASME A17.1. THE CONTRACTOR SHALL DOCUMENT THE FINDINGS OF THIS WEETING IN WRITTEN MEETING MINUTES AND INCLUDE THE MINUTES WITH THE SHOP DRAWING SUBMITTED TO THE ENGINEER.
3. MATERIAL: 316L STAINLESS STEEL.

| NO. | DATE | ISSUED FOR | BY |
|---|---|---|---|

DESIGNED W.H.R.
DRAWN A.L.B.
CHECKED W.H.R.
PROJ. ENGR. G.A.B.

DEAN AVERY WALDROP R.A.
No. 93380

HAZEN AND SAWYER
Environmental Engineers & Scientists
4000 Hollywood Boulevard, Suite 750N
Hollywood, Florida 33021
Certificate of Authorization Number: 2771

SCALE 1 1/2"=1'-0"

CLIENTS PROJECT: –
ENGINEERS PROJECT: 44238-004
CAD REFERENCE: 44238-004BP3-A25

NORTH MIAMI FLORIDA
CITY OF NORTH MIAMI
PUBLIC WORKS UTILITIES

WINSON WATER TREATMENT PLANT
BID PACKAGE 3: WTP REHABILITATION
STANDARD ARCHITECTURAL DETAILS SHEET 4

DATE: JUNE 2014
SHEET: 214 OF 335
DRAWING: A-25

PERMITTING

XREFs= ..\Tblock\44238-004-BP3-TB

File = H:\44238-004\Drawings\Bid Package 3 - WTP Rehab\Arch\44238-004BP3-A25 Saved by ablaha Save date = 6/9/2014 6:10 PM

PLOT DATE: 6/10/2014 10:15 AM BY: HSCAU1

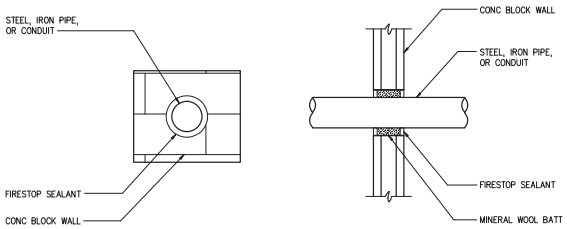


2-HR METALLIC PIPE THROUGH CMU WALL
UL DESIGN C-AJ-1079

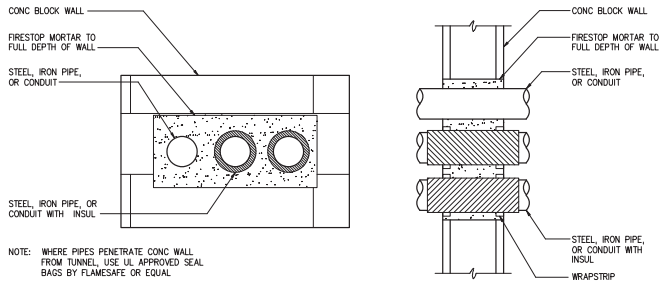


2-HR MULTIPLE PIPES THROUGH CMU OR CONC WALL
UL DESIGN C-AJ-8033

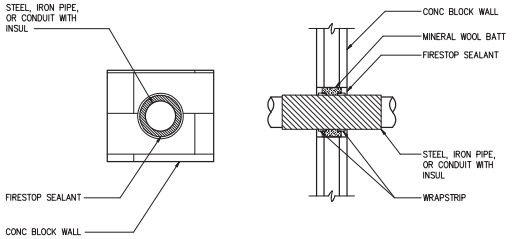


2-HR INSULATED METALLIC PIPE THROUGH CMU
WALL UL DESIGN C-AJ-5051 OR C-AJ-5042

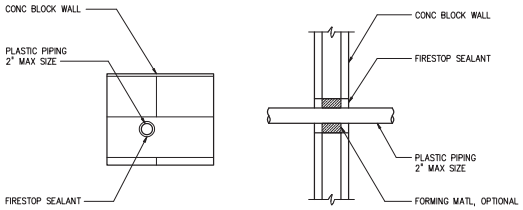


2-HR PLASTIC PIPE THROUGH CMU WALL
UL DESIGN C-AJ-2031

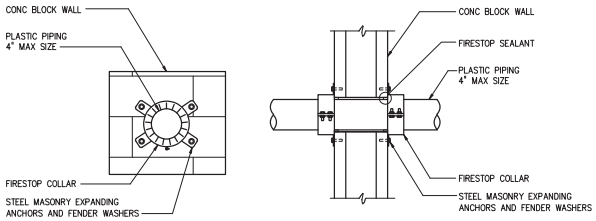


2-HR PLASTIC PIPE THROUGH CMU WALL
UL DESIGN C-AJ-2063

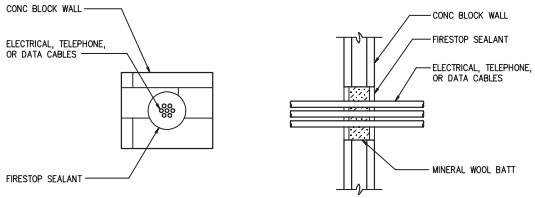


2-HR ELECTRICAL CABLE THROUGH CMU WALL
UL DESIGN C-AJ-3042

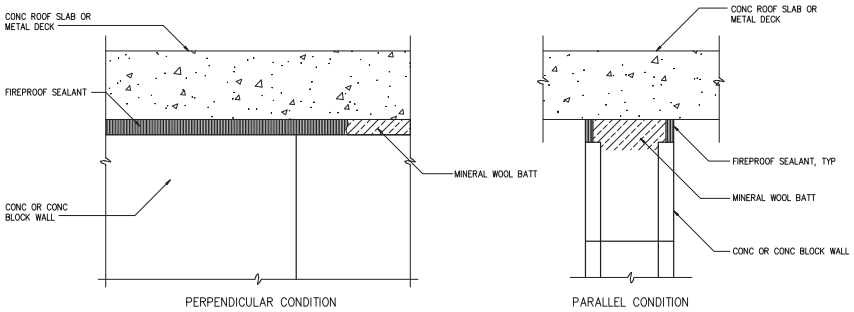


PERPENDICULAR CONDITION

PARALLEL CONDITION

2-HR TOP OF WALL
UL DESIGN HW-D-0027

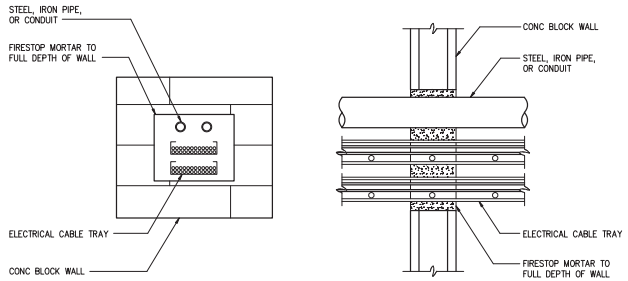


2-HR MULTIPLE PIPE/CABLE TRAY THROUGH CMU WALL
UL DESIGN C-AJ-8016

| NO. | DATE | ISSUED FOR | BY |
|---|---|---|---|

DESIGNED W.H.R.
DRAWN A.L.B.
CHECKED W.H.R.
PROJ. ENGR. G.A.B.

DEAN AVERY WALDROP R.A.
No. 93380

**HAZEN AND SAWYER**
Environmental Engineers & Scientists
4000 Hollywood Boulevard, Suite 750N
Hollywood, Florida 33021
Certificate of Authorization Number: 2771

SCALE –

CLIENTS PROJECT: –
ENGINEERS PROJECT: 44238-004
CAD REFERENCE: 44238-004BP3-A26

NORTH MIAMI FLORIDA
**CITY OF NORTH MIAMI**
**PUBLIC WORKS UTILITIES**

WINSON WATER TREATMENT PLANT
BID PACKAGE 3: WTP REHABILITATION
FIRESTOPPING DETAILS

DATE: JUNE 2014
SHEET: 215 OF 335
DRAWING: A-26

PERMITTING

PLOT DATE: 6/10/2014 10:16 AM BY: HRSAUT

XREFs= ..\Tblock\44238-004-BP3-TB,..\Arch Details\A-SD-34 Firestopping Details

File = H:\44238-004\Drawings\Bid Package 3 - WTP Rehab\Arch\44238-004BP3-A26 Saved by abldsha Save date = 6/9/2014 7:27 PM

## INSTRUMENT AND FUNCTION SYMBOLS

| | PRIMARY LOCATION NORMALLY ACCESSIBLE TO OPERATOR | FIELD MOUNTED | AUXILLARY LOCATION NORMALLY ACCESSIBLE TO OPERATOR | NORMALLY INACCESSIBLE OR BEHIND THE PANEL DEVICES OR FUNCTIONS |
|---|---|---|---|---|
| FIELD/PANEL EQUIPMENT | XXX 000 | XXX 000 | XXX 000 | XXX 000 |
| SHARED DISPLAY, SHARED CONTROL | XXX 000 | XXX 000 | XXX 000 | XXX 000 |
| PROGRAMMABLE LOGIC CONTROLLER | XXX 000 — PLC I/O | | PLC LOGIC — XXX 000 | |
| SUPERVISORY COMPUTER FUNCTION (OIT/HMI) | ABC 12345 | ABC 12345 | ABC 12345 | ABC 12345 |

SINGLE INSTRUMENT OR OTHER DEVICE HAVING MULTIPLE FUNCTIONS OR SHARING A COMMON HOUSING

XXXX YYY — SOFTWARE LOGIC OR CONTROL MODULE XXXX AND SUB-MODULE YYY RESIDENT IN DISTRIBUTED CONTROL SYSTEM (DCS) OR PROGRAMMABLE LOGIC CONTROLLER (PLC) REFER TO CONTRACT DOCUMENTS FOR CONTROL AND MODULE DESCRIPTIONS.

ZZZ — DESIGNATIONS OF CONTROL FUNCTIONS (ZZZ) ASSOCIATED WITH INSTRUMENT OR OTHER DEVICES.

AHC – AUTO/HOLD/CLOSE
AM – AUTO/MANUAL
DEV – DEVIATION
HOA – HAND/OFF/AUTO
MOA – MANUAL/OFF/AUTO
HOR – HAND/OFF/REMOTE
LOS – LOCKOUT STOP
LR – LOCAL/REMOTE
LOR – LOCAL/OFF/REMOTE
OO – ON/OFF
OC – OPEN/CLOSE
OSC – OPEN/STOP/CLOSED
POT – POTENTIOMETER
RL – RAISE/LOWER
RSL – RAISE/STOP/LOWER
SD – SHUTDOWN
SEL – SELECT
SP – SET POINT
SR – START/RESET
SS – START/STOP

* — INSTRUMENT PANEL MOUNTED WITH COMPUTING OR CONVERTING FUNCTION

CONVERT */*
E – VOLTAGE
I – CURRENT
P – PNEUMATIC
A – ANALOG
B – BINARY
H – HYDRAULIC
O – ELECTROMAGNETIC, SONIC
R – RESISTANCE (ELECT.)
D – DIGITAL

COMPUTE *
Σ SUMMING
△ SUBTRACTOR
X MULTIPLYING
÷ DIVIDING
$\sqrt[n]{}$ ROOT EXTRACTION
K PROPORTIONAL
d/dt DERIVATIVE
$X^n$ EXPONENTIAL
Σ/n AVERAGING
: RATIO
> HIGH SELECTING
< LOW SELECTING
∫ INTEGRAL
PID PID

XXX 000 — PANEL MOUNTED PILOT LIGHT

AIT 000 XXXX — ANALYZER, XXXX = TYPE

ALK – ALKALINITY
$Cl_2$ – CHLORINE CONCENTRATION
COMB – COMBUSTIBLE GAS
COND – CONDUCTIVITY
DO – DISSOLVED OXYGEN
$H_2S$ – HYDROGEN SULFIDE
LEL – LOWER EXPLOSIVE LIMIT
$O_2$ – OXYGEN CONCENTRATION
$O_3$ – OZONE
ORP – OXIDATION/REDUCTION POTENTIAL
pH – HYDROGEN ION CONCENTRATION
T – TURBIDITY
TH – TOTAL HARDNESS
UV – ULTRAVIOLET

* ASTERISK IDENTIFIES FIELD INSTRUMENTS OR PANELS FURNISHED UNDER SPECIFICATIONS OTHER THAN DIVISION 17.

OPERATIONAL INTERLOCK

I COMPLEX INTERLOCK
# # = 1, 2, 3, etc. INTERLOCK NUMBER DESCRIPTION ON ON SAME SHEET
AND AND LOGIC
OR OR LOGIC

## VALVE AND ACTUATOR SYMBOLS

| | | | |
|---|---|---|---|
| GENERIC VALVE | PLUG VALVE | GLOBE VALVE | BALL VALVE |
| BALL VALVE (3-WAY) | 3-WAY VALVE (GENERAL) | PINCH VALVE | COMBINATION VACUUM AND PRESSURE RELIEF VALVE |
| BUTTERFLY VALVE | CHECK VALVE | BALL CHECK VALVE | DIAPHRAGM VALVE |
| NEEDLE VALVE | ANGLE VALVE | ROTARY VALVE | THROUGH PLUG VALVE |
| PRESSURE RELEIF OR SAFETY VALVE | VACUUM RELIEF VALVE | PRESSURE-REDUCING REGULATOR | BACKPRESSURE REGULATOR |
| BACKFLOW PREVENTER | SLUICE GATE | STOP/SLIDE GATE | STRAINER |
| AIR RELIEF VALVE | ELECTRIC ACTUATOR | SOLENOID ACTUATOR | PNEUMATIC ACTUATOR |
| ELECTROPNEUMATIC ACTUATOR | ELECTROHYDRAULIC ACTUATOR | HAND WHEEL | |

## INSTRUMENT SYMBOLS

| | | | | | | | |
|---|---|---|---|---|---|---|---|
| MAGNETIC FLOW METER | VENTURI FLOW TUBE | TURBINE FLOW METER | ROTAMETER | ULTRASONIC FLOW METER | PADDLE WHEEL FLOW METER | VORTEX FLOW METER | POSITIVE DISPLACEMENT FLOW METER |
| PITOT TUBE | PARSHALL FLUME | WEIR | ORIFICE PLATE | STRAIGHTENING VANES | ULTRASONIC LEVEL SENSOR | SUBMERSIBLE LEVEL SENSOR | FLOAT TYPE LEVEL SWITCH |
| TAPPED RING SEAL | DIAPHRAGM SEAL | FULL LINE RING SEAL | VALVED TAP | RTD AND THERMOWELL | RADAR LEVEL SENSOR (UNGUIDED) | RADAR LEVEL SENSOR (GUIDED) | CAPACITANCE LEVEL SENSOR |

NOTES:

1. LIGHT LINES AND SYMBOLS INDICATE EXISTING ITEMS (OR FUTURE ITEMS WHERE NOTED). DARK LINES AND SYMBOLS INDICATE PROPOSED ITEMS.

2. SYMBOLS AND NOMENCLATURE ARE BASED ON ISA STANDARDS S5.1, S5.2, AND S5.4. SEE ASSOCIATED ELECTRICAL AND MECHANICAL SYMBOL SHEETS FOR ADDITIONAL SYMBOLS AND ABBREVIATIONS.

## PUMP AND EQUIPMENT SYMBOLS

| | | | |
|---|---|---|---|
| CENTRIFUGAL PUMP | CENTRIFUGAL WET PIT PUMP (SUBMERSIBLE) | BLOWER (CENTRIFUGAL) | GEAR PUMP OR BLOWER (POSITIVE DISPLACEMENT) |
| PROGRESSIVE CAVITY PUMP | SCREW PUMP | PISTON PUMP | DIAPHRAGM PUMP |
| VERTICAL PUMP | SUBMERSIBLE VERTICAL PUMP | CHEMICAL FEED PUMP | COMPRESSOR |
| | | MIXER | TURBINE |

## MISCELLANEOUS SYMBOLS

| | | | | | | | |
|---|---|---|---|---|---|---|---|
| I-XXX DRAWING REFERENCE | XXX_YYYY LOOP/CONTROL STRATEGY TAG | XXX_YYYY EQUIPMENT TAG | PLC OR DCS ANALOG INPUT | PLC OR DCS ANALOG OUTPUT | PLC OR DCS DISCRETE INPUT | PLC OR DCS DISCRETE OUTPUT | M MOTOR |
| V VENT | D DRAIN | FILTER | AIR FILTER | STATIC MIXER | INJECTOR | PULSATION DAMPENER | CALIBRATION CYLINDER |
| HORN | HORN/STROBE | RUPTURE DISK | REDUCER | PIPE MATERIAL CHANGE | QUICK CONNECT | BLIND FLANGE | EXPANSION TANK |

## INSTRUMENT/DEVICE IDENTIFICATION LETTERS

| | FIRST-LETTER | | SUCCEEDING-LETTERS | | |
|---|---|---|---|---|---|
| | MEASURED OR INITIATING VARIABLE | MODIFIER | READOUT OR PASSIVE FUNCTION | OUTPUT FUNCTION | MODIFIER |
| A | ANALYSIS | | ALARM | | |
| B | BURNER, COMBUSTION | | | | |
| C | | | | CONTROL | CLOSE/CLOSED |
| D | | DIFFERENTIAL | | | |
| E | VOLTAGE | | SENSOR (PRIMARY ELEMENT) | | |
| F | FLOW RATE | RATIO (FRACTION) | | | |
| G | GAUGE | | GLASS, VIEWING DEVICE | | |
| H | HAND | | | | HIGH |
| I | CURRENT (ELECTRICAL) | | INDICATE | | |
| J | POWER | SCAN | | | |
| K | TIME, TIME SCHEDULE | TIME RATE OF CHANGE | | CONTROL STATION | |
| L | LEVEL | | LIGHT | | LOW |
| M | | MOMENTARY | | | MIDDLE, INTERMEDIATE |
| N | TORQUE | | | | |
| O | | | ORIFICE, RESTRICTION | | OPEN/OPENED |
| P | PRESSURE, VACUUM | | POINT (TEST) CONNECTION | | |
| Q | QUANTITY | INTEGRATE, TOTALIZE | | | |
| R | RUN | | RECORD & STORE | REPORT | |
| S | SPEED, FREQUENCY | SAFETY | | SWITCH | |
| T | TEMPERATURE | | | TRANSMIT | |
| U | MULTIVARIABLE | | MULTIFUNCTION | MULTIFUNCTION | MULTIFUNCTION |
| V | VIBRATION, VOLUME MECHANICAL ANALYSIS | | | VALVE, DAMPER, LOUVER | |
| W | WEIGHT, FORCE | | WELL | | |
| X | FAILURE OR TROUBLE | X AXIS | | | |
| Y | EVENT, STATE OR PRESENCE | Y AXIS | | COMPUTE, CONVERT, RELAY | |
| Z | POSITION, DIMENSION | Z AXIS | | DRIVER, ACTUATOR, FINAL CONTROL ELEMENT | |

## LINETYPE LEGEND

- MAJOR PROCESS PIPES OR CHANNELS
- SECONDARY PROCESS OR MECHANICAL CONNECTIONS
- CAPILLARY OR IMPULSE TUBING
- AIR SUPPLY OR SIGNAL
- HYDRAULIC SUPPLY OR SIGNAL
- ELECTRICAL SIGNAL
- CATEGORY 6 CABLE
- FIBER OPTIC CABLE
- DATA LINK OR INTERNAL SOFTWARE LINK

## SAMPLE LOOP DIAGRAM ISA EXPANDED FORMAT

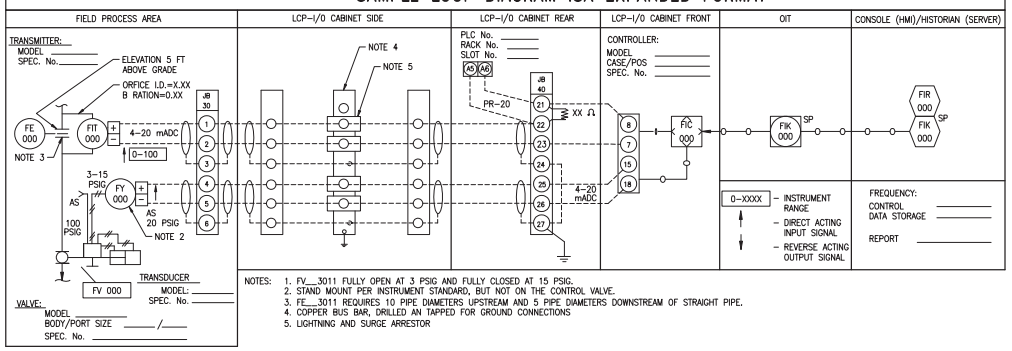


NOTES:
1. FV__3011 FULLY OPEN AT 3 PSIG AND FULLY CLOSED AT 15 PSIG.
2. STAND MOUNT PER INSTRUMENT STANDARD, BUT NOT ON THE CONTROL VALVE.
3. FE__3011 REQUIRES 10 PIPE DIAMETERS UPSTREAM AND 5 PIPE DIAMETERS DOWNSTREAM OF STRAIGHT PIPE.
4. COPPER BUS BAR, DRILLED AN TAPPED FOR GROUND CONNECTIONS
5. LIGHTNING AND SURGE ARRESTOR

| NO. | DATE | ISSUED FOR | BY |
|---|---|---|---|

DESIGNED L.P.A.
DRAWN R.D.A.
CHECKED G.A.B.
PROJ. ENGR. G.A.B.

LUIS P. AMARAL P.E.
No. 47573

HAZEN AND SAWYER
Environmental Engineers & Scientists
4000 Hollywood Boulevard, Suite 750N
Hollywood, Florida 33021
Certificate of Authorization Number: 2771

SCALE N/A

CLIENTS PROJECT: –
ENGINEERS PROJECT: 44238-004
CAD REFERENCE: 44238-004BP3-I01

NORTH MIAMI FLORIDA
CITY OF NORTH MIAMI
PUBLIC WORKS UTILITIES

WINSON WATER TREATMENT PLANT
BID PACKAGE 3: WTP REHABILITATION
SYMBOLS AND LEGEND

DATE: JUNE 2014
SHEET: 216 OF 335
DRAWING: I-1

PERMITTING

PLOT DATE: 6/10/2014 2:50 PM BY: HSCALIT
XREFS= ..\..\..\Tblock\44238-004-BP3-TB
File = H:\44238-004\Drawings\Bid Package 3 - WTP Rehab\Instrumentation\Bid Package 3 - WTP Rehab\PID DWG\44238-004BP3-I01 Saved by lamaral Save date = 6/9/2014 8:17 PM

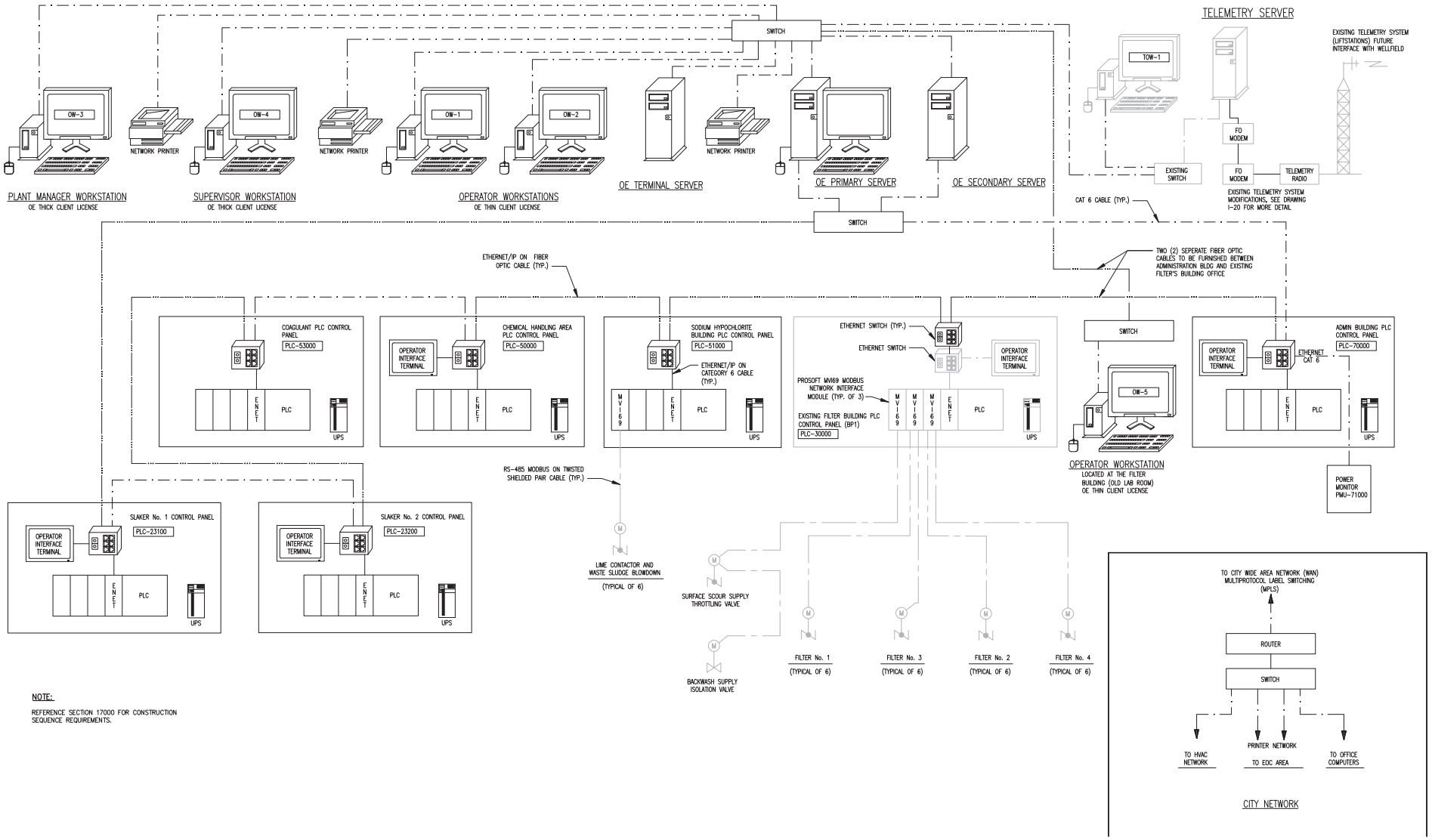


NOTE:

REFERENCE SECTION 17000 FOR CONSTRUCTION SEQUENCE REQUIREMENTS.

| NO. | DATE | ISSUED FOR | BY |
|---|---|---|---|
| 1 | 4/1/14 | 100% QA COMMENTS | H.J.V. |

DESIGNED L.P.A.
DRAWN R.D.A.
CHECKED G.A.B.
PROJ. ENGR. G.A.B.

LUIS P. AMARAL P.E.
No. 47573

HAZEN AND SAWYER
Environmental Engineers & Scientists
4000 Hollywood Boulevard, Suite 750N
Hollywood, Florida 33021
Certificate of Authorization Number: 2771

SCALE N/A

CLIENTS PROJECT: –
ENGINEERS PROJECT: 44238-004
CAD REFERENCE: 44238-004BP3-I02

NORTH MIAMI FLORIDA
CITY OF NORTH MIAMI
PUBLIC WORKS UTILITIES

WINSON WATER TREATMENT PLANT
BID PACKAGE 3: WTP REHABILITATION
SYSTEM BLOCK DIAGRAM

DATE: JUNE 2014
SHEET: 217 OF 335
DRAWING: I-2

PERMITTING

XREFs= ..\..\..\Tblock\44238-004-BP3-TB

File = H:\44238-004\Drawings\Bid Package 3 - WTP Rehab\Instrumentation\Bid Package 3 - WTP Rehab\PID DWG\44238-004BP3-I02 Saved by HsCal2 Save date = 6/9/2014 5:17 PM

PLOT DATE: 6/10/2014 2:51 PM BY: HSCAL1

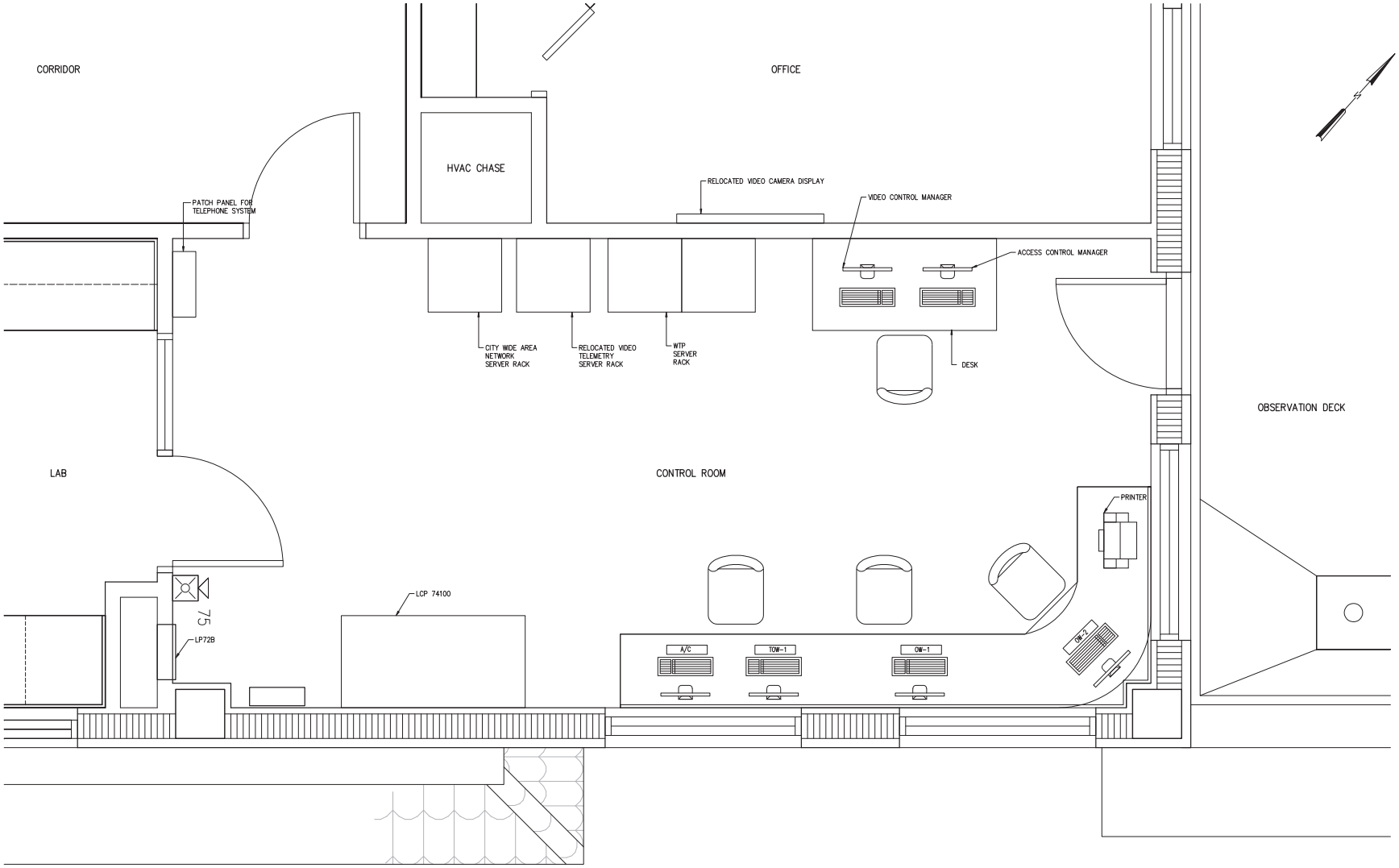


3/4"=1'-0"

6" 0 1 2'

| NO. | DATE | ISSUED FOR | BY |
|---|---|---|---|
| 1 | 4/1/14 | 100% QA COMMENTS | H.J.V. |

DESIGNED L.P.A.
DRAWN R.D.A.
CHECKED G.A.B.
PROJ. ENGR. G.A.B.

LUIS P. AMARAL P.E.
No. 47573

**HAZEN AND SAWYER**
Environmental Engineers & Scientists
4000 Hollywood Boulevard, Suite 750N
Hollywood, Florida 33021
Certificate of Authorization Number: 2771

SCALE 3/4"=1'-0"

CLIENTS PROJECT: –
ENGINEERS PROJECT: 44238-004
CAD REFERENCE: 44238-004BP3-I03

NORTH MIAMI FLORIDA
**CITY OF NORTH MIAMI**
**PUBLIC WORKS UTILITIES**

WINSON WATER TREATMENT PLANT
BID PACKAGE 3: WTP REHABILITATION
NEW ADMINISTRATION BUILDING
CONTROL ROOM LAYOUT

DATE: JUNE 2014
SHEET: 218 OF 335
DRAWING: I-3

PERMITTING

PLOT DATE: 6/19/2014 2:53 PM BY: HSCALIT

XREFS= ..\..\..\Tblock\44238-004-BP3-TB,..\..\..\Base-BP3\A-BP3-Admin-Plan-Top,..\..\..\Base-BP3\A-BP3-Admin-Plan-Col-Grid,..\..\..\Base-BP3\P-BP3-Admin-Plan-Top

File = H:\44238-004\Drawings\Bid Package 3 - WTP Rehab\Instrumentation\Bid Package 3 - WTP Rehab\PID DWG\44238-004BP3-I03 Saved by HsCad2 Save date = 6/9/2014 7:36 PM

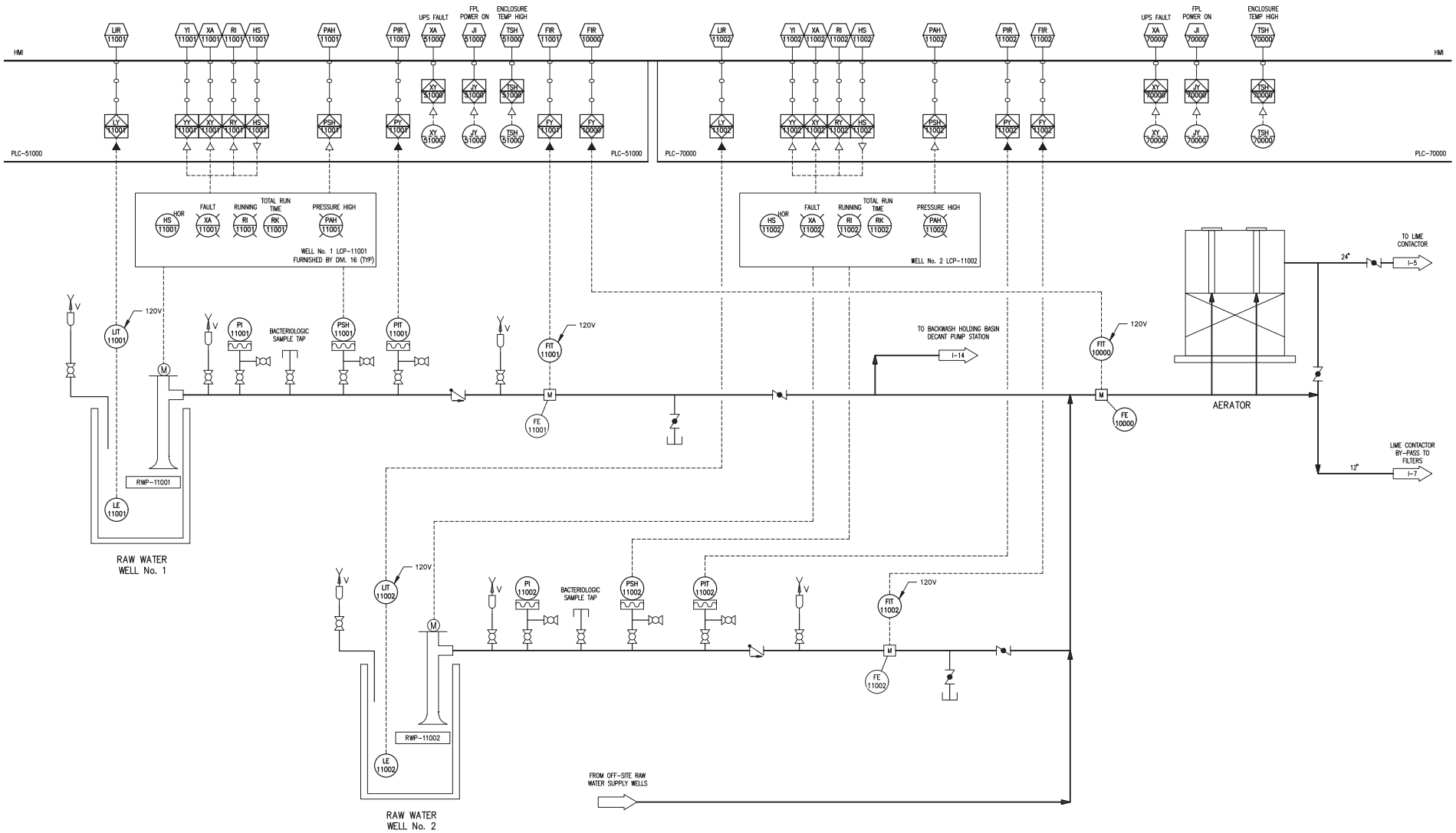


| NO. | DATE | ISSUED FOR | BY |
|---|---|---|---|

DESIGNED L.P.A.
DRAWN R.D.A.
CHECKED G.A.B.
PROJ. ENGR. G.A.B.

LUIS P. AMARAL P.E.
No. 47573

**HAZEN AND SAWYER**
Environmental Engineers & Scientists
4000 Hollywood Boulevard, Suite 750N
Hollywood, Florida 33021
Certificate of Authorization Number: 2771

SCALE N/A

CLIENTS PROJECT: –
ENGINEERS PROJECT: 44238-004
CAD REFERENCE: 44238-004BP3-I04

NORTH MIAMI FLORIDA
**CITY OF NORTH MIAMI**
**PUBLIC WORKS UTILITIES**

WINSON WATER TREATMENT PLANT
BID PACKAGE 3: WTP REHABILITATION

# ON-SITE PRODUCTION WELLS AND AERATOR

DATE: JUNE 2014
SHEET: 219 OF 335
DRAWING: I-4

PERMITTING

PLOT DATE: 6/10/2014 2:54 PM BY: HSCALIT
XREFs= ..\..\..\Tblock\44238-004-BP3-TB
File = H:\44238-004\Drawings\Bid Package 3 - WTP Rehab\Instrumentation\Bid Package 3 - WTP Rehab\PID DWG\44238-004BP3-I04 Saved by lamaral Save date = 6/9/2014 7:34 PM

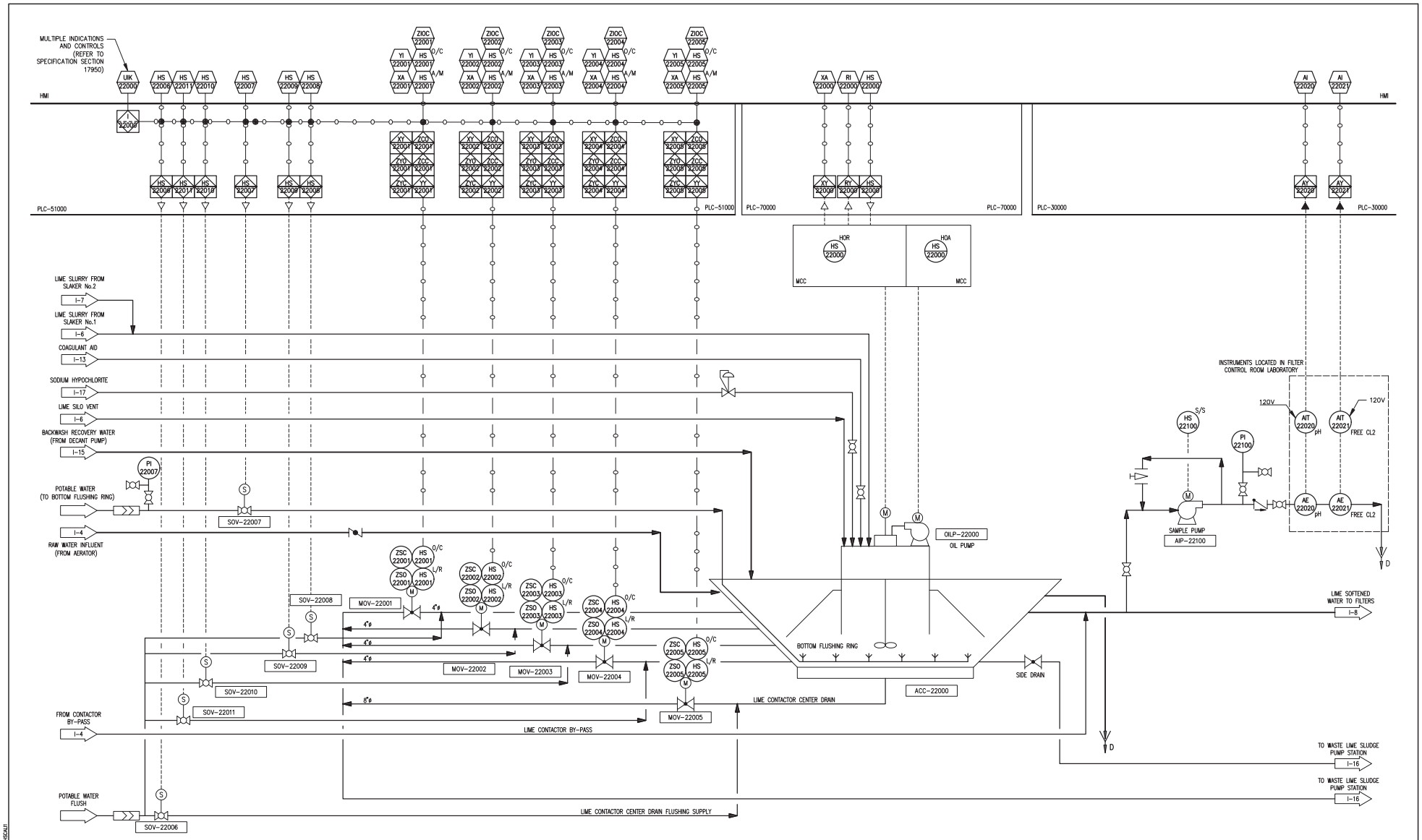


| NO. | DATE | ISSUED FOR | BY |
|---|---|---|---|

DESIGNED L.P.A.
DRAWN R.D.A.
CHECKED G.A.B.
PROJ. ENGR. G.A.B.

LUIS P. AMARAL P.E.
No. 47573

**HAZEN AND SAWYER**
Environmental Engineers & Scientists
4000 Hollywood Boulevard, Suite 750N
Hollywood, Florida 33021
Certificate of Authorization Number: 2771

SCALE N/A

CLIENTS PROJECT: –
ENGINEERS PROJECT: 44238-004
CAD REFERENCE: 44238-004BP3-I05

NORTH MIAMI FLORIDA
CITY OF NORTH MIAMI
PUBLIC WORKS UTILITIES

WINSON WATER TREATMENT PLANT
BID PACKAGE 3: WTP REHABILITATION

# LIME CONTACTOR AND WASTE SLUDGE BLOWDOWN

DATE: JUNE 2014
SHEET: 220 OF 335
DRAWING: I-5

PERMITTING

PLOT DATE: 6/10/2014 2:56 PM BY: HSCALIT

XREFs= ..\..\..\Tblock\44238-004-BP3-TB

File = H:\44238-004\Drawings\Bid Package 3 - WTP Rehab\Instrumentation\Bid Package 3 - WTP Rehab\PID DWG\44238-004BP3-I05 Saved by lamaral Save date = 6/9/2014 7:49 PM

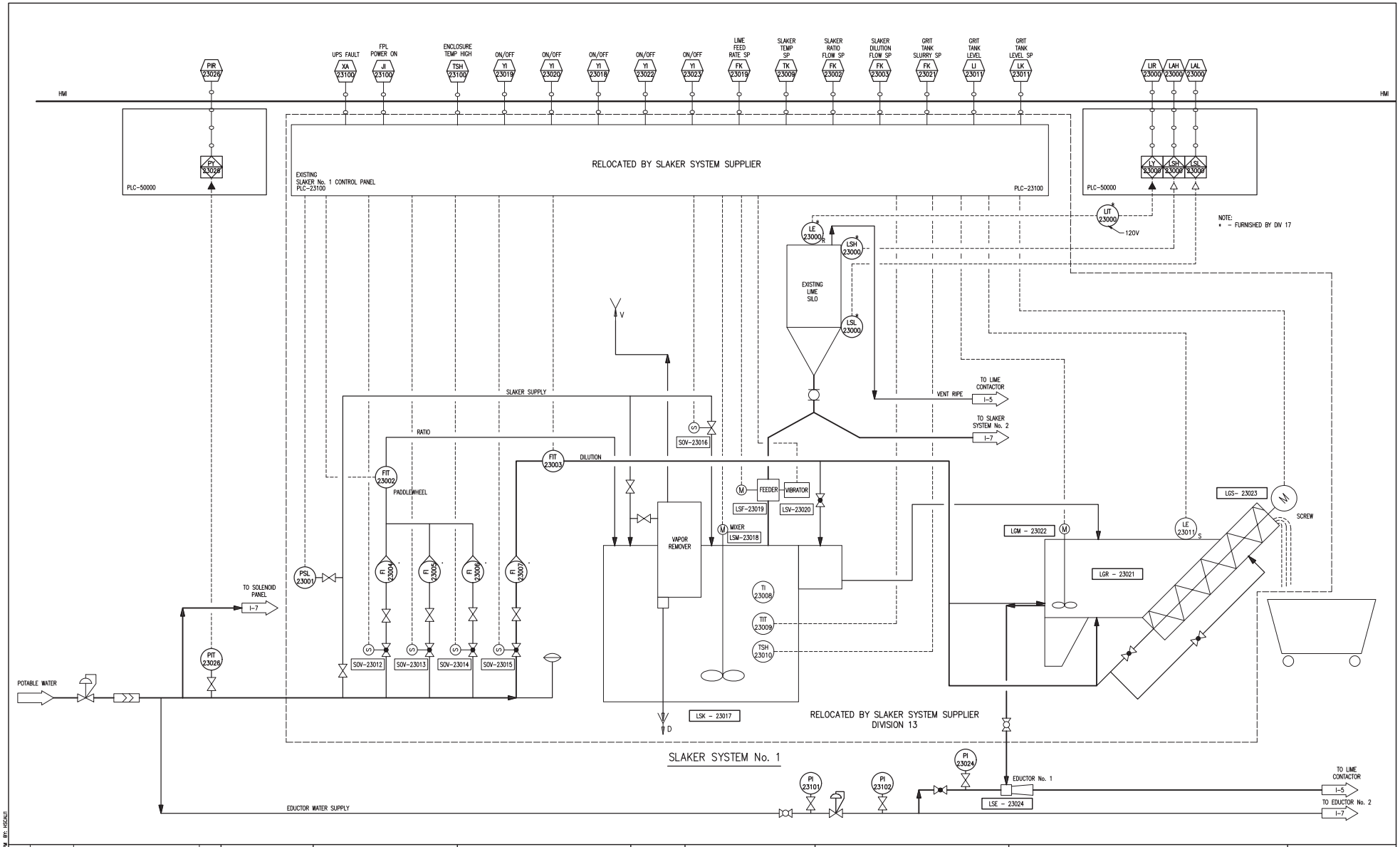


| NO. | DATE | ISSUED FOR | BY |
|---|---|---|---|
| 1 | 4/1/14 | 100% QA COMMENTS | H.J.V. |

DESIGNED L.P.A.
DRAWN R.D.A.
CHECKED G.A.B.
PROJ. ENGR. G.A.B.

LUIS P. AMARAL P.E.
No. 47573

**HAZEN AND SAWYER**
Environmental Engineers & Scientists
4000 Hollywood Boulevard, Suite 750N
Hollywood, Florida 33021
Certificate of Authorization Number: 2771

SCALE N/A

CLIENTS PROJECT: –
ENGINEERS PROJECT: 44238-004
CAD REFERENCE: 44238-004BP3-I06

NORTH MIAMI FLORIDA
CITY OF NORTH MIAMI
PUBLIC WORKS UTILITIES

WINSON WATER TREATMENT PLANT
BID PACKAGE 3: WTP REHABILITATION
LIME SLAKING SYSTEM NO. 1

DATE: JUNE 2014
SHEET: 221 OF 335
DRAWING: I-6

PERMITTING

PLOT DATE: 6/10/2014 2:56 PM BY: HSCALIT
XREFs= ..\..\..\Tblock\44238-004-BP3-TB
File = H:\44238-004\Drawings\Bid Package 3 - WTP Rehab\Instrumentation\Bid Package 3 - WTP Rehab\PID DWG\44238-004BP3-I06 Saved by HsCal2 Save date = 6/9/2014 8:03 PM

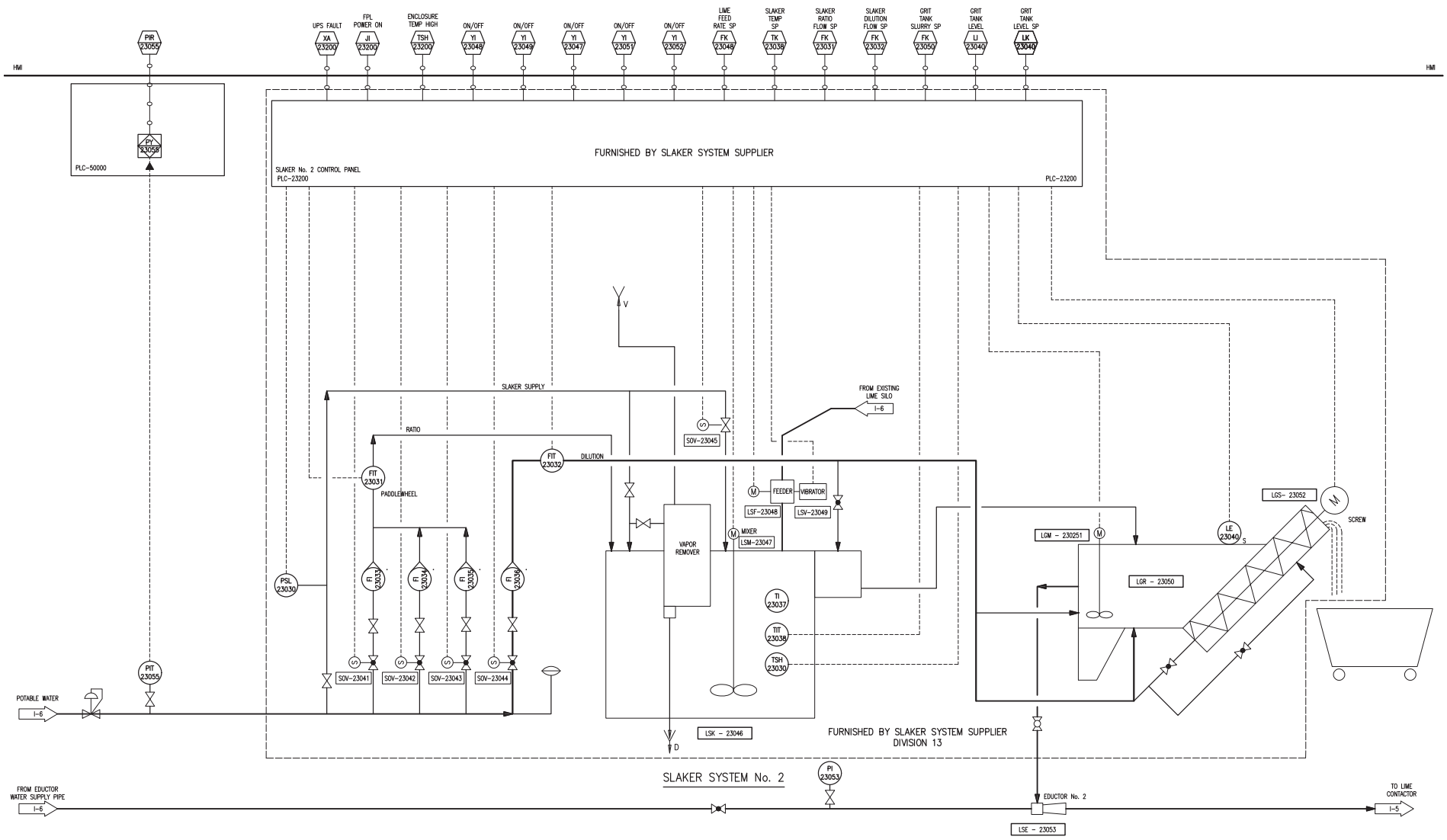


| NO. | DATE | ISSUED FOR | BY |
|---|---|---|---|
| 1 | 4/1/14 | 100% QA COMMENTS | H.J.V. |

DESIGNED L.P.A.
DRAWN R.D.A.
CHECKED G.A.B.
PROJ. ENGR. G.A.B.

LUIS P. AMARAL P.E.
No. 47573

**HAZEN AND SAWYER**
Environmental Engineers & Scientists
4000 Hollywood Boulevard, Suite 750N
Hollywood, Florida 33021
Certificate of Authorization Number: 2771

SCALE N/A

CLIENTS PROJECT: –
ENGINEERS PROJECT: 44238-004
CAD REFERENCE: 44238-004BP3-I07

NORTH MIAMI FLORIDA
CITY OF NORTH MIAMI
PUBLIC WORKS UTILITIES

WINSON WATER TREATMENT PLANT
BID PACKAGE 3: WTP REHABILITATION
LIME SLAKING SYSTEM NO. 2

DATE: JUNE 2014
SHEET: 222 OF 335
DRAWING: I-7

PERMITTING

XREFs= ..\..\..\Tblock\44238-004-BP3-TB

File = H:\44238-004\Drawings\Bid Package 3 - WTP Rehab\Instrumentation\Bid Package 3 - WTP Rehab\PID DWG\44238-004BP3-I07 Saved by HsCad2 Save date = 6/9/2014 8:02 PM

PLOT DATE: 6/10/2014 2:58 PM BY: HSCALIT

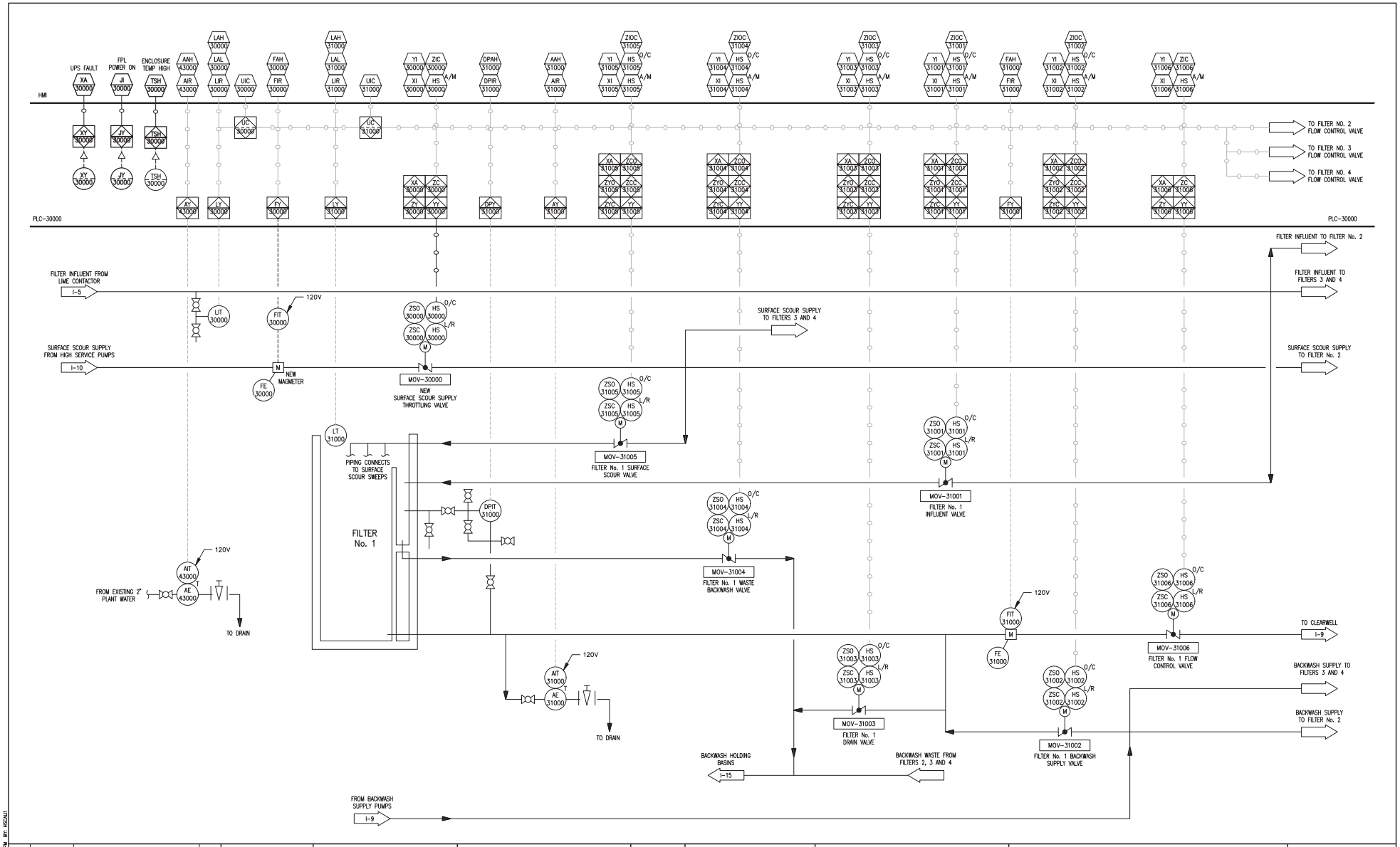


| NO. | DATE | ISSUED FOR | BY |
|---|---|---|---|

DESIGNED L.P.A.
DRAWN R.D.A.
CHECKED G.A.B.
PROJ. ENGR. G.A.B.

LUIS P. AMARAL P.E.
No. 47573

**HAZEN AND SAWYER**
Environmental Engineers & Scientists
4000 Hollywood Boulevard, Suite 750N
Hollywood, Florida 33021
Certificate of Authorization Number: 2771

SCALE N/A

CLIENTS PROJECT: –
ENGINEERS PROJECT: 44238-004
CAD REFERENCE: 44238-004BP3-I08

NORTH MIAMI FLORIDA
**CITY OF NORTH MIAMI**
**PUBLIC WORKS UTILITIES**

WINSON WATER TREATMENT PLANT
BID PACKAGE 3: WTP REHABILITATION
FILTERS (FROM BP 1)

DATE: JUNE 2014
SHEET: 223 OF 335
DRAWING: I-8

PERMITTING

PLOT DATE: 6/10/2014 2:58 PM BY: HSCALIT
XREFs= ..\..\..\Tblock\44238-004-BP3-TB
File = H:\44238-004\Drawings\Bid Package 3 - WTP Rehab\Instrumentation\Bid Package 3 - WTP Rehab\PID DWG\44238-004BP3-I08 Saved by lamaral Save date = 6/9/2014 7:36 PM

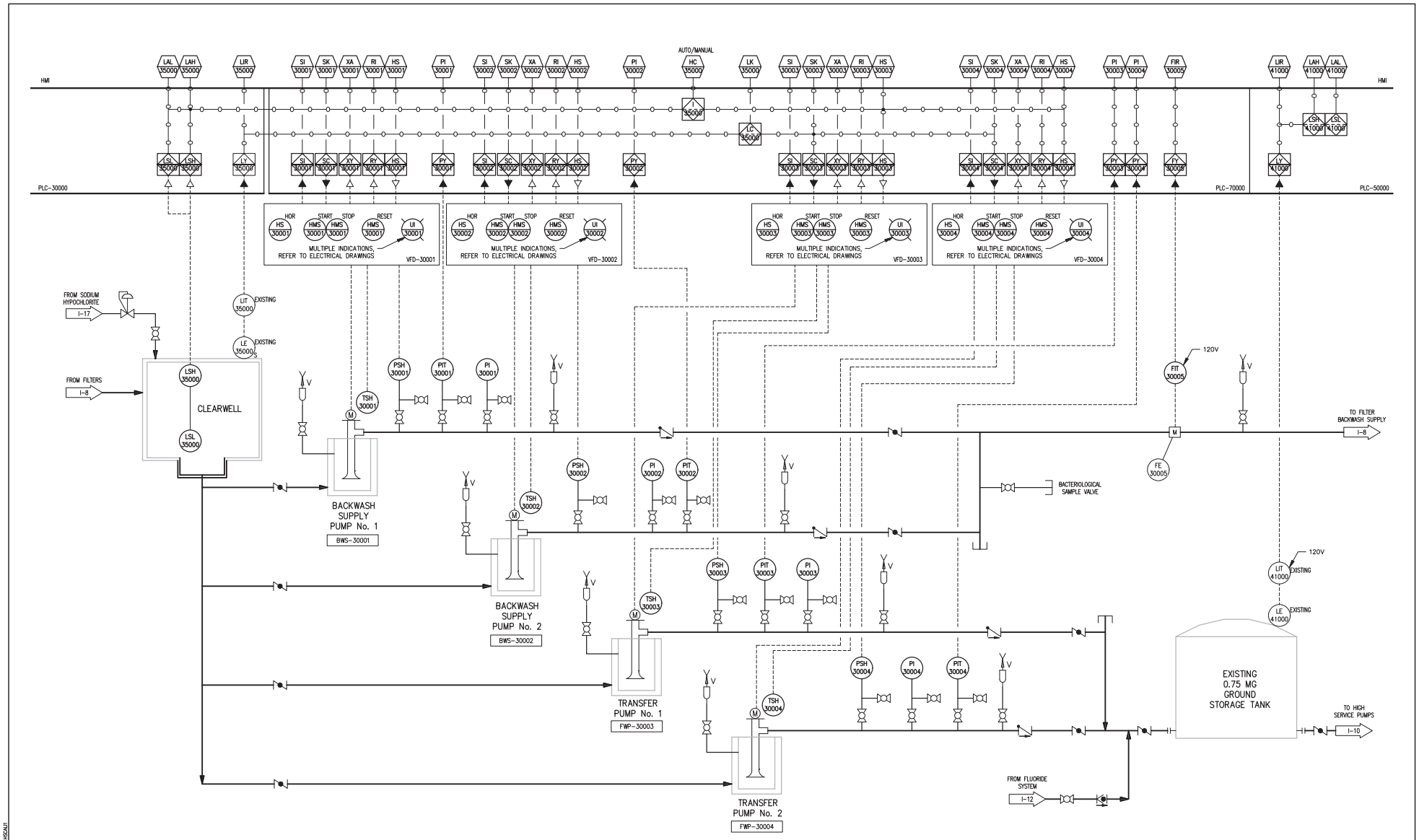


| NO. | DATE | ISSUED FOR | BY |
|---|---|---|---|

DESIGNED L.P.A.
DRAWN R.D.A.
CHECKED G.A.B.
PROJ. ENGR. G.A.B.

LUIS P. AMARAL P.E.
No. 47573

**HAZEN AND SAWYER**
Environmental Engineers & Scientists
4000 Hollywood Boulevard, Suite 750N
Hollywood, Florida 33021
Certificate of Authorization Number: 2771

SCALE N/A

CLIENTS PROJECT: –
ENGINEERS PROJECT: 44238-004
CAD REFERENCE: 44238-004BP3-I09

NORTH MIAMI FLORIDA
**CITY OF NORTH MIAMI**
**PUBLIC WORKS UTILITIES**

WINSON WATER TREATMENT PLANT
BID PACKAGE 3: WTP REHABILITATION
MASTER PUMP STATION BACKWASH AND TRANSFER PUMPS

DATE: JUNE 2014
SHEET: 224 OF 335
DRAWING: I-9

PERMITTING

PLOT DATE: 6/10/2014 2:59 PM BY: HSCALIT
XREFs= ..\..\..\Tblock\44238-004-BP3-TB
File = H:\44238-004\Drawings\Bid Package 3 - WTP Rehab\Instrumentation\Bid Package 3 - WTP Rehab\PID DWG\44238-004BP3-I09 Saved by lamaral Save date = 6/9/2014 6:19 PM