CITY OF NORTH MIAMI

PUBLIC WORKS UTILITIES

WINSON WATER TREATMENT PLANT

BID PACKAGE 3: WTP REHABILITATION

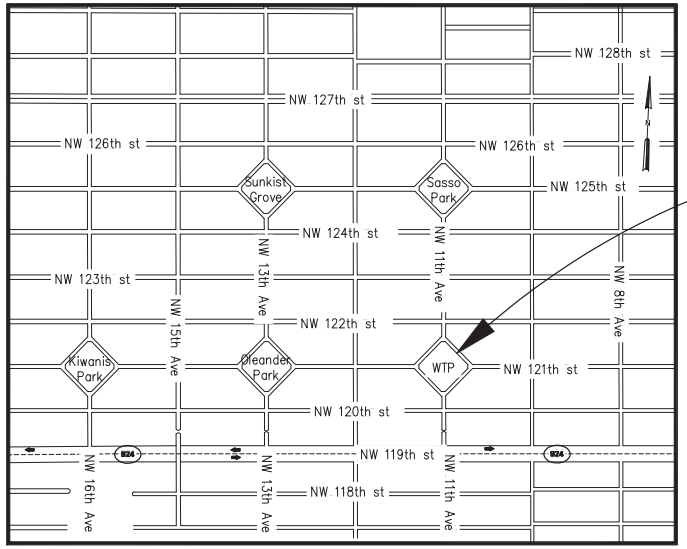

PROJECT LOCATION:
12098 NORTHWEST 11th AVE
NORTH MIAMI, FLORIDA 33168

LOCATION MAP
NOT TO SCALE

NORTH MIAMI FLORIDA

HAZEN AND SAWYER
Environmental Engineers & Scientists
4000 Hollywood Boulevard, Suite 750N
Hollywood, Florida 33021
Certificate of Authorization Number: 2771

JUNE 2014
PERMIT SET

TITLE SHEET AND LOCATION MAP
SHEET 1 OF 355
DRAWING No. G-01

H&S PROJECT No.44238-004 – BID PACK 3 – WTP REHAB
PERMITTING

LIST OF DRAWINGS

SHEET COUNT	SHEET NUMBER	SHEET DESCRIPTION
		GENERAL
1	G-01	COVER SHEET
2	G-02	LIST OF DRAWINGS SHEET 1
3	G-03	LIST OF DRAWINGS SHEET 2
4	G-04	ABBREVIATIONS, SYMBOLS AND LEGEND
5	G-05	GENERAL NOTES
6	G-06	EXISTING SITE PLAN
7	G-07	EXISTING SITE AERIAL AND ZONING MAP
8	G-08	PROPOSED SITE PLAN
9	G-09	PROPOSED STAGING PLAN – PHASE I
10	G-10	PROPOSED STAGING PLAN DEMOLITION PLAN – PHASE I
11	G-11	PROPOSED STAGING PLAN CONSTRUCTION PLAN – PHASE I
12	G-12	PROPOSED STAGING PLAN PHASES II, III & IV
13	G-13	PROPOSED STAGING PLAN DEMOLITION AND CONSTRUCTION PLAN – PHASE II
14	G-14	PROPOSED STAGING PLAN DEMOLITION PLAN – PHASE III
15	G-15	PROPOSED STAGING PLAN CONSTRUCTION PLAN – PHASE III
16	G-16	PROPOSED STAGING PLAN DEMOLITION PLAN – PHASE IV
17	G-17	PROPOSED STAGING PLAN CONSTRUCTION PLAN – PHASE IV
		CIVIL
18	C-01	YARD PIPING – EXISTING PLAN
19	C-02	YARD PIPING – DEMOLITION PLAN SEQUENCING
20	C-03	YARD PIPING – PROPOSED PLAN
21	C-04	YARD PIPING – DETAILS SHEET 1
22	C-05	YARD PIPING – DETAILS SHEET 2
23	C-06	YARD PIPING – DETAILS SHEET 3
24	C-07	YARD PIPING – DETAILS SHEET 4
25	C-08	YARD PIPING – DETAILS SHEET 5
26	C-09	PAVING, GRADING & DRAINAGE EXISTING PLAN
27	C-10	PAVING, GRADING & DRAINAGE EXISTING CONDITION PHOTOS
28	C-11	PAVEMENT MARKING AND SIGNAGE PLAN
29	C-12	SITE PLAN DETAILS
30	C-13	SETBACK PLAN
31	C-14	PAVING, GRADING & DRAINAGE PROPOSED PLAN
32	C-15	SWALES DRAINAGE PROPOSED PLAN
33	C-16	GATE NO. 1
34	C-17	GATE NO. 2
35	C-18	GATE NO. 3
36	C-19	GATE NO. 5
37	C-20	GATE NO. 6
38	C-21	PAVING, GRADING & DRAINAGE SECTIONS – SHEET 1
39	C-22	PAVING, GRADING & DRAINAGE SECTIONS – SHEET 2
40	C-23	PAVING, GRADING & DRAINAGE SECTIONS – SHEET 3
41	C-24	PAVING, GRADING & DRAINAGE SECTIONS – SHEET 4
42	C-25	PAVING, GRADING & DRAINAGE SECTIONS – SHEET 5
43	C-26	PAVING, GRADING & DRAINAGE SECTIONS – SHEET 6
44	C-27	BREEZEWAY PLANS AND DETAILS
45	C-28	CIVIL DETAILS SHEET 1
46	C-29	CIVIL DETAILS SHEET 2
47	C-30	CIVIL DETAILS SHEET 3
48	C-31	CIVIL DETAILS SHEET 4
49	C-32	CIVIL DETAILS SHEET 5
50	C-33	CIVIL DETAILS SHEET 6
51	C-34	CIVIL DETAILS SHEET 7
52	C-35	CIVIL DETAILS SHEET 8
53	C-36	CIVIL DETAILS SHEET 9
54	C-37	CIVIL DETAILS SHEET 10
55	C-38	CIVIL DETAILS SHEET 11
56	C-39	CIVIL DETAILS SHEET 12
57	C-40	CIVIL DETAILS SHEET 13
58	C-41	CIVIL DETAILS SHEET 14
59	C-42	CIVIL DETAILS SHEET 15
60	C-43	CIVIL DETAILS SHEET 16
61	C-44	CIVIL DETAILS SHEET 17
		MECHANICAL
62	M-01	EXISTING PROCESS FLOW DIAGRAM
63	M-02	PROPOSED PROCESS FLOW DIAGRAM
64	M-03	DEMOLITION AERIAL PLAN KEY PLAN
65	M-04	RAW WATER WELL NO. 1 DEMOLITION PLAN AND PHOTOS
66	M-05	RAW WATER WELL NO. 2 DEMOLITION PLAN AND PHOTOS
67	M-06	LIME CONTACTOR REHABILITATION DEMOLITION PLAN
68	M-07	LIME CONTACTOR REHABILITATION DEMOLITION PHOTOS – SHEET 1
69	M-08	LIME CONTACTOR REHABILITATION DEMOLITION PHOTOS – SHEET 2
70	M-09	LIME CONTACTOR REHABILITATION DEMOLITION PHOTOS – SHEET 3
71	M-10	LIME CONTACTOR REHABILITATION DEMOLITION PHOTOS – SHEET 4
72	M-11	LIME CONTACTOR REHABILITATION DEMOLITION PHOTOS – SHEET 5
73	M-12	LIME SLAKER AND SILO MODIFICATIONS DEMOLITION PLAN
74	M-13	LIME SLAKER AND SILO MODIFICATIONS DEMOLITION PHOTOS
75	M-14	HIGH SERVICE PUMP STATION DEMOLITION PLAN
76	M-15	HIGH SERVICE PUMP STATION DEMOLITION PHOTOS – SHEET 1
77	M-16	HIGH SERVICE PUMP STATION DEMOLITION PHOTOS – SHEET 2
78	M-17	HIGH SERVICE PUMP STATION DEMOLITION PHOTOS – SHEET 3
79	M-18	HIGH SERVICE PUMP STATION DEMOLITION PHOTOS – SHEET 4
80	M-19	BACKWASH & WASTE SLUDGE HOLDING BASIN DEMOLITION PLAN
81	M-20	BACKWASH & WASTE SLUDGE HOLDING BASIN DEMOLITION PHOTOS – SHEET 1
82	M-21	BACKWASH & WASTE SLUDGE HOLDING BASIN DEMOLITION PHOTOS – SHEET 2
83	M-22	BACKWASH & WASTE SLUDGE HOLDING BASIN DEMOLITION PHOTOS – SHEET 3
84	M-23	WATER STORAGE TANK 0.75 MG EXISTING PLAN
85	M-24	WATER STORAGE TANK 0.75 MG AND LP TANK PHOTOS
86	M-25	WATER STORAGE TANK 1.5 MG DEMOLITION PLAN
87	M-26	WATER STORAGE TANK 1.5 MG DEMOLITION PHOTOS
88	M-27	SODIUM HYPOCHLORITE FACILITY DEMOLITION PLAN
89	M-28	SODIUM HYPOCHLORITE FACILITY DEMOLITION PHOTOS
90	M-29	COAGULANT FEED SYSTEM DEMOLITION PLAN AND PHOTOS
91	M-30	FLUORIDE FEED SYSTEM DEMOLITION PLAN AND PHOTOS
92	M-31	AMMONIA FEED SYSTEM DEMOLITION PLAN AND PHOTOS
93	M-32	RAW WATER WELL NO. 1 PROPOSED PLAN, SECTIONS AND DETAILS
94	M-33	RAW WATER WELL No. 2 PROPOSED PLAN, SECTIONS AND DETAILS
95	M-34	RAW WATER WELL DETAILS
96	M-35	LIME CONTACTOR REHABILITATION PROPOSED PLAN
97	M-36	LIME CONTACTOR REHABILITATION SECTIONS AND DETAILS
98	M-37	LIME CONTACTOR REHABILITATION SECTIONS AND DETAILS
99	M-38	LIME CONTACTOR REHABILITATION DETAILS
100	M-39	LIME CONTACTOR REHABILITATION SECTIONS AND DETAILS
101	M-40	LIME SLAKER AND SILO MODIFICATIONS PLAN
102	M-41	LIME SLAKER AND SILO MODIFICATIONS PLANS
103	M-42	LIME SLAKER AND SILO MODIFICATIONS SECTION AND DETAILS
104	M-43	LIME SLAKER AND SILO MODIFICATIONS DIAGRAMS
105	M-44	MASTER PUMP STATION KEY PLAN
106	M-45	HIGH SERVICE PUMPS PLAN
107	M-46	BACKWASH AND TRANSFER PUMPS PLAN
108	M-47	MASTER PUMP STATION SECTIONS AND DETAILS
109	M-48	MASTER PUMP STATION SECTIONS
110	M-49	MASTER PUMP STATION SECTIONS AND DETAILS
111	M-50	INTERIM CHEMICAL STORAGE AND FEED SYSTEMS
112	M-51	CHEMICAL HANDLING FACILITY KEY PLAN AND SIGNAGE
113	M-52	CHEMICAL HANDLING FACILITY ANTI-COAGULANT AND COAGULANT AID
114	M-53	CHEMICAL HANDLING FACILITY FLUORIDE AND AQUEOUS AMMONIA
115	M-54	CHEMICAL HANDLING FACILITY SECTIONS
116	M-55	CHEMICAL HANDLING FACILITY SECTIONS AND DETAILS
117	M-56	BACKWASH HOLDING BASIN PROPOSED PLAN
118	M-57	BACKWASH HOLDING BASIN SECTIONS AND DETAILS
119	M-58	BACKWASH BASIN SLUDGE PUMP PLAN AND SECTIONS
120	M-59	BACKWASH BASIN DECANT PUMP PLAN AND SECTIONS
121	M-60	WASTE LIME SLUDGE PUMP STATION PLAN AND DETAILS
122	M-61	WASTE LIME SLUDGE PUMP STATION SECTIONS
123	M-62	SODIUM HYPOCHLORITE FACILITIES PROPOSED PLAN
124	M-63	SODIUM HYPOCHLORITE FACILITIES SECTIONS – SHEET 1
125	M-64	SODIUM HYPOCHLORITE FACILITIES SECTIONS – SHEET 2
126	M-65	SODIUM HYPOCHLORITE FACILITIES SECTIONS – SHEET 3
127	M-66	SODIUM HYPOCHLORITE FACILITIES DETAILS
128	M-67	SAMPLE PUMP DETAILS
129	M-68	EXISTING FILTER CONTROL ROOM WATER QUALITY ANALYZERS
130	M-69	EXISTING FILTER CONTROL ROOM WATER QUALITY ANALYZERS – SECTION
131	M-70	EXISTING FILTERS HYPOCHLORITE INJECTION
132	M-71	MECHANICAL DETAILS – SHEET 1
133	M-72	MECHANICAL DETAILS – SHEET 2
134	M-73	MECHANICAL DETAILS – SHEET 3
135	M-74	MECHANICAL DETAILS – SHEET 4
136	M-75	MECHANICAL DETAILS – SHEET 5
137	M-76	MECHANICAL DETAILS – SHEET 6
138	M-77	MECHANICAL DETAILS – SHEET 7
139	M-78	MECHANICAL DETAILS – SHEET 8
140	M-79	MECHANICAL DETAILS SHEET 9
		STRUCTURAL
141	S-01	GENERAL STRUCTURAL NOTES
142	S-02	NEW ADMINISTRATION BUILDING FOUNDATION PLAN
143	S-03	NEW ADMINISTRATION BUILDING FIRST FLOOR PLAN
144	S-04	NEW ADMINISTRATION BUILDING SECOND FLOOR PLAN
145	S-05	NEW ADMINISTRATION BUILDING ROOF PLAN
146	S-06	NEW ADMINISTRATION BUILDING ROOF TRUSS PLANS
147	S-07	NEW ADMINISTRATION BUILDING ACCESS AND SIDEWALK
148	S-08	NEW ADMINISTRATION BUILDING SECTIONS SHEET 1
149	S-09	NEW ADMINISTRATION BUILDING SECTIONS SHEET 2
150	S-10	NEW ADMINISTRATION BUILDING DETAILS SHEET 1
151	S-11	NEW ADMINISTRATION BUILDING DETAILS SHEET 2
152	S-12	NEW ADMINISTRATION BUILDING BEAM AND COLUMN SCHEDULES
153	S-13	AERATOR EXISTING PLAN AND PHOTOS
154	S-14	AERATOR SUPPORT STRUCTURE IMPROVEMENTS PLAN AND SECTIONS
155	S-15	AERATOR MIST PANEL IMPROVEMENTS SECTIONS AND DETAILS
156	S-16	AERATOR/LIME CONTACTOR ACCESS STAIRS SECTIONS AND DETAILS –SHEET 1
157	S-17	AERATOR/LIME CONTACTOR ACCESS STAIRS SECTIONS AND DETAILS –SHEET 2
158	S-18	AERATOR/LIME CONTACTOR ACCESS STAIRS SECTIONS AND DETAILS –SHEET 3
159	S-19	LIME SLAKER AND SILO MODIFICATIONS PLANS
160	S-20	LIME SLAKER AND SILO MODIFICATIONS SECTIONS AND DETAILS
161	S-21	WASTE LIME SLUDGE PUMP STATION PROPOSED PLAN, SECTIONS AND DETAILS
162	S-22	EXISTING FILTER CONTROL ROOM STAIRS PLAN
163	S-23	FILTER/OPS BUILDINGS STAIRS ELEVATIONS AND DETAILS
164	S-24	HIGH SERVICE PUMP STATION AND ELECTRICAL ROOM 1 STRUCTURAL MODIFICATIONS – SHEET 1
165	S-25	HIGH SERVICE PUMP STATION AND ELECTRICAL ROOM 1 STRUCTURAL MODIFICATIONS – SHEET 2
166	S-26	HIGH SERVICE PUMP STATION AND ELECTRICAL ROOM 1 STRUCTURAL MODIFICATIONS – SHEET 3
167	S-27	MASTER PUMP STATION PROPOSED PLAN
168	S-28	MASTER PUMP STATION SECTIONS AND DETAILS
169	S-29	MASTER PUMP STATION SECTIONS
170	S-30	CHEMICAL HANDLING FACILITY PROPOSED PLAN
171	S-31	CHEMICAL HANDLING FACILITY SECTIONS AND DETAILS SHEET 1
172	S-32	CHEMICAL HANDLING FACILITY SECTIONS AND DETAILS SHEET 2
173	S-33	CHEMICAL HANDLING FACILITY SECTIONS AND DETAILS SHEET 3
174	S-34	BACKWASH HOLDING BASIN DEMOLITION PLAN
175	S-35	BACKWASH HOLDING BASIN REHABILITATION PLANS AND DETAILS
176	S-36	BACKWASH HOLDING BASIN REHABILITATION DETAILS
177	S-37	SODIUM HYPOCHLORITE FACILITIES LIFE SAFETY AND PROPOSED PLANS
178	S-38	SODIUM HYPOCHLORITE FACILITIES SECTIONS AND DETAILS
179	S-39	SODIUM HYPOCHLORITE FACILITIES GRATING PLAN AND DETAILS
180	S-40	CHEMICAL INJECTION VAULT PLAN AND SECTION
181	S-41	CLEARWELL EXTENSION PLAN AND SECTION
182	S-42	STRUCTURAL DETAILS SHEET 1
183	S-43	STRUCTURAL DETAILS SHEET 2
184	S-44	STRUCTURAL DETAILS SHEET 3
185	S-45	STRUCTURAL DETAILS SHEET 4
186	S-46	STRUCTURAL DETAILS SHEET 5
187	S-47	STRUCTURAL DETAILS SHEET 6
188	S-48	STRUCTURAL DETAILS SHEET 7
189	S-49	STRUCTURAL DETAILS SHEET 8

NO.	DATE	ISSUED FOR	BY

DESIGNED G.A.B.
DRAWN G.P.B.
CHECKED J.N.M.
PROJ. ENGR. G.A.B.

H. J. VIDAL P.E.
No. 37882

HAZEN AND SAWYER
Environmental Engineers & Scientists
4000 Hollywood Boulevard, Suite 750N
Hollywood, Florida 33021
Certificate of Authorization Number: 2771

SCALE NTS

CLIENTS PROJECT: –
ENGINEERS PROJECT: 44238-004
CAD REFERENCE: 44238-004BP3-G02

NORTH MIAMI FLORIDA
CITY OF NORTH MIAMI
PUBLIC WORKS UTILITIES

WINSON WATER TREATMENT PLANT
BID PACKAGE 3: WTP REHABILITATION
LIST OF DRAWINGS
SHEET 1

DATE: JUNE 2014
SHEET: 2 OF 335
DRAWING: G-02

PERMITTING

PLOT DATE: 6/10/2014 8:36 AM BY: HSCALIT
XREFs= ..\Tblock\44238-004-BP3-TB
File = H:\44238-004\Drawings\Bid Package 3 - WTP Rehab\General\44238-004BP3-G02 Saved by HScalit Save date = 6/9/2014 7:53 PM

LIST OF DRAWINGS

SHEET NUMBER	Sheet Title	Sheet Description
		ARCHITECTURAL
190	A-01	NEW ADMINISTRATION BUILDING SCHEDULES
191	A-02	NEW ADMINISTRATION BUILDING LIFE SAFETY PLANS
192	A-03	NEW ADMINISTRATION BUILDING FIRST FLOOR PLAN
193	A-04	NEW ADMINISTRATION BUILDING SECOND FLOOR PLAN
194	A-05	NEW ADMINISTRATION BUILDING ROOF PLAN
195	A-06	NEW ADMINISTRATION BUILDING FIRST FLOOR REFLECTED CEILING PLAN
196	A-07	NEW ADMINISTRATION BUILDING SECOND FLOOR REFLECTED CEILING PLAN
197	A-08	NEW ADMINISTRATION BUILDING SOUTH AND EAST ELEVATIONS
198	A-09	NEW ADMINISTRATION BUILDING NORTH AND WEST ELEVATIONS
199	A-10	NEW ADMINISTRATION BUILDING WALL SECTIONS - SHEET 1
200	A-11	NEW ADMINISTRATION BUILDING WALL SECTIONS - SHEET 2
201	A-12	NEW ADMINISTRATION BUILDING ENLARGED FLOOR PLAN AND ELEVATIONS SHEET 1
202	A-13	NEW ADMINISTRATION BUILDING ENLARGED FLOOR PLAN AND ELEVATIONS SHEET 2
203	A-14	NEW ADMISTRATION BUILDING DETAILS
204	A-15	NEW ADMINISTRATION BUILDING FIRST FLOOR FURNITURE PLAN
205	A-16	NEW ADMINISTRATION BUILDING SECOND FLOOR FURNITURE PLAN
206	A-17	CHEMICAL HANDLING FACILITY LIFE SAFETY PLAN
207	A-18	CHEMICAL HANDLING FACILITY PROPOSED PLAN
208	A-19	CHEMICAL HANDLING FACILITY SECTIONS AND DETAILS
209	A-20	CHEMICAL HANDLING FACILITY SCHEDULES AND DETAILS
210	A-21	EXISTING WTP EXTERIOR PAINTING
211	A-22	STANDARD ARCHITECTURAL DETAILS SHEET 1
212	A-23	STANDARD ARCHITECTURAL DETAILS SHEET 2
213	A-24	STANDARD ARCHITECTURAL DETAILS SHEET 3
214	A-25	STANDARD ARCHITECTURAL DETAILS SHEET 4
215	A-26	FIRESTOPPING DETAILS
		INSTRUMENTATION
216	I-1	SYMBOLS AND LEGEND
217	I-2	SYSTEM BLOCK DIAGRAM
218	I-3	NEW ADMINISTRATION BUILDING CONTROL ROOM LAYOUT
219	I-4	ON-SITE PRODUCTION WELLS AND AERATOR
220	I-5	LIME CONTACTOR AND WASTE SLUDGE BLOWDOWN
221	I-6	LIME SLAKING SYSTEM NO. 1
222	I-7	LIME SLAKING SYSTEM NO. 2
223	I-8	FILTERS (FROM BP 1)
224	I-9	MASTER PUMP STATION BACKWASH AND TRANSFER PUMPS
225	I-10	MASTER PUMP STATION HIGH SERVICE PUMPS
226	I-11	CHEMICAL HANDLING FACILITY AMMONIA FEED SYSTEMS
227	I-12	CHEMICAL HANDLING FACILITY - FLUORIDE FEED SYSTEMS
228	I-13	CHEMICAL HANDLING FACILITY COAGULANT FEED SYSTEM
229	I-14	CHEMICAL HANDLING FACILITY - ANTI-COAGULANT FEED SYSTEM
230	I-15	BACKWASH HOLDING BASINS
231	I-16	WASTE LIME SLUDGE PUMP STATION
232	I-17	HYPOCHLORITE STORAGE AND FEED FACILITY
233	I-18	MASTER PUMP STATION ANALYZERS
234	I-19	ENCLOSURE DETAILS
235	I-20	SITE SECURITY AND TELEMETRY MODIFICATIONS
236	I-21	ELECTRICAL MONITORING SYSTEM AND SCHEMATICS
237	I-22	INSTALLATION AND MISCELLANEOUS DETAILS SHEET 1
238	I-23	INSTALLATION AND MISCELLANEOUS DETAILS SHEET 2
239	I-24	INSTALLATION AND MISCELLANEOUS DETAILS SHEET 3

SHEET NUMBER	Sheet Title	Sheet Description
		ELECTRICAL
240	E-01	ELECTRICAL LEGEND AND SYMBOLS
241	E-02	ELECTRICAL NOTES
242	E-03	ELECTRICAL SITE PLAN EXISTING
243	E-04	ELECTRICAL SITE PLAN PROPOSED
244	E-05	EXISTING FACILITY SINGLE LINE DIAGRAM
245	E-06	PROPOSED FACILITY SINGLE LINE DIAGRAM SHEET 1 OF 2
246	E-07	PROPOSED FACILITY SINGLE LINE DIAGRAM SHEET 2 OF 2
247	E-08	EXISTING FILTER BUILDING FIRST FLOOR ELECTRICAL PLAN
248	E-09	EXISTING FILTER CONTROL ROOM ELECTRICAL PLAN
249	E-10	NEW ADMINISTRATION BUILDING FIRST FLOOR PLAN
250	E-11	NEW ADMINISTRATION BUILDING ELECTRICAL ROOM PLAN
251	E-12	NEW ADMINISTRATION BUILDING SECOND FLOOR PLAN
252	E-13	NEW ADMINISTRATION BUILDING ROOF POWER
253	E-14	NEW ADMINISTRATION BUILDING FIRST FLOOR LIGHTING
254	E-15	NEW ADMINISTRATION BUILDING SECOND FLOOR LIGHTING
255	E-16	NEW ADMINISTRATION BUILDING FIRST FLOOR FIRE ALARM PLAN
256	E-17	NEW ADMINISTRATION BUILDING SECOND FLOOR FIRE ALARM PLAN
257	E-18	NEW ADMINISTRATION BUILDING FIRE ALARM RISER AND CALCULATIONS
258	E-19	NEW ADMINISTRATION BUILDING FIRE ALARM NOTES AND LEGENDS
259	E-20	SECURITY ACCESS ELECTRICAL DETAILS SHEET 1
260	E-21	SECURITY ACCESS ELECTRICAL DETAILS SHEET 2
261	E-22	SECURITY ACCESS ELECTRICAL DETAILS SHEET 3
262	E-23	ELECTRICAL ROOM 1 DEMOLITION AND PROPOSED PLAN
263	E-24	ELECTRICAL ROOM 2 EQUIPMENT MODIFICATIONS
264	E-25	RAW WATER WELL NOS. 1 AND 2 POWER AND LIGHTING PLAN
265	E-26	AERATOR / LIME CONTACTOR ACCESS STAIRS POWER AND LIGHTING PLAN
266	E-27	LIME CONTACTOR POWER AND LIGHTING PLAN
267	E-28	LIME SLAKER AND SILO MODIFICATIONS POWER AND LIGHTING PLAN
268	E-29	MASTER PUMP STATION POWER AND LIGHTING PLAN
269	E-30	HIGH SERVICE PUMPS SECTION
270	E-31	BACKWASH AND TRANSFER PUMPS SECTION
271	E-32	INTERIM CHEMICAL STORAGE AND FEED SYSTEM POWER AND LIGHTING PLAN
272	E-33	CHEMICAL HANDLING FACILITY POWER AND LIGHTING PLAN
273	E-34	BACKWASH HOLDING BASINS POWER PLAN
274	E-35	WASTE LIME SLUDGE PUMP STATION POWER PLAN
275	E-36	SODIUM HYPOCHLORITE FACILITIES POWER AND LIGHTING
276	E-37	LIGHTNING PROTECTION SYSTEM
277	E-38	SITE LIGHTING PLAN
278	E-39	SITE SECURITY PLAN
279	E-40	SECURITY SCHEDULES
280	E-41	PANEL SCHEDULES ADMINISTRATION BUILDING
281	E-42	PANEL SCHEDULES PROCESS AREA SHEET 1
282	E-43	PANEL SCHEDULES PROCESS AREA SHEET 2
283	E-44	PANEL SCHEDULES PROCESS AREA SHEET 3
284	E-45	PANEL SCHEDULES PROCESS AREA SHEET 4
285	E-46	SCHEMATICS SHEET 1
286	E-47	SCHEMATICS SHEET 2
287	E-48	SCHEMATICS SHEET 3
288	E-49	ELECTRICAL CONTROL AND SIGNAL RISER DIAGRAMS 1
289	E-50	ELECTRICAL CONTROL AND SIGNAL RISER DIAGRAMS 2
290	E-51	ELECTRICAL CONTROL AND SIGNAL RISER DIAGRAMS 3

SHEET NUMBER	Sheet Title	Sheet Description
291	E-52	ELECTRICAL CONTROL AND SIGNAL RISER DIAGRAMS 4
292	E-53	ELECTRICAL CONTROL AND SIGNAL RISER DIAGRAMS 5
293	E-54	ELECTRICAL CONTROL AN SIGNAL RISER DIAGRAMS 6
294	E-55	ELECTRICAL CONTROL AN SIGNAL RISER DIAGRAMS 7
295	E-56	ELECTRICAL CONTROL AN SIGNAL RISER DIAGRAMS 8
296	E-57	DUCT BANK SECTIONS
297	E-58	DUCT BANK SCHEDULES
298	E-59	MANHOLES - E1 AND C1 CONDUIT RISERS
299	E-60	MANHOLES - E2 AND C2 CONDUIT RISERS
300	E-61	MANHOLES - E3 AND E4 CONDUIT RISERS
301	E-62	MANHOLES - C3 AND C4 CONDUIT RISERS
302	E-63	ELECTRICAL DETAILS SHEET 1
303	E-64	ELECTRICAL DETAILS SHEET 2
304	E-65	ELECTRICAL DETAILS SHEET 3
305	E-66	ELECTRICAL DETAILS SHEET 4
306	E-67	ELECTRICAL DETAILS SHEET 5
307	E-68	ELECTRICAL DETAILS SHEET 6
308	E-69	ELECTRICAL DETAILS SHEET 7
309	E-70	ELECTRICAL DETAILS SHEET 8
		HVAC
310	H-01	HVAC SYMBOLS, ABBREVIATIONS AND NOTES
311	H-02	NEW ADMINISTRATION BUILDING FIRST FLOOR - HVAC PLAN
312	H-03	NEW ADMINISTRATION BUILDING SECOND FLOOR - HVAC PLAN
313	H-04	NEW ADMINISTRATION BUILDING ROOF - HVACPLAN
314	H-05	CHEMICAL HANDLING FACILITY HVAC PLAN
315	H-06	HVAC SCHEDULES
316	H-07	HVAC DETAILS SHEET 1
317	H-08	HVAC DETAILS SHEET 2
		PLUMBING
318	P-01	PLUMBING SYMBOLS, ABBREVIATIONS, AND NOTES
319	P-02	NEW ADMINISTRATION BUILDING FIRST FLOOR SANITARY PLAN
320	P-03	NEW ADMINISTRATION BUILDING SECOND FLOOR SANITARY PLAN
321	P-04	NEW ADMINISTRATION BUILDING FIRST FLOOR POTABLE WATER PLAN
322	P-05	NEW ADMINISTRATION BUILDING SECOND FLOOR POTABLE WATER PLAN
323	P-06	NEW ADMINISTRATION BUILDING ROOF DRAINAGE PLAN
324	P-07	NEW ADMINISTRATION BUILDING SANITARY ISOMETRIC
325	P-08	NEW ADMINISTRATION BUILDING FIRST FLOOR POTABLE WATER ISOMETRIC
326	P-09	NEW ADMINISTRATION BUILDING SECOND FLOOR POTABLE WATER ISOMETRIC
327	P-10	PLUMBING DETAILS SHEET 1
328	P-11	LANDSCAPE ELEVATIONS - CODE MINIMUM
		LANDSCAPING
329	L-1	LANDSCAPE PLAN
330	L-2	LANDSCAPE NOTES
331	L-3	LANDSCAPE DETAILS
		IRRIGATION
332	IR-1	IRRIGATION PLAN
333	IR-2	IRRIGATION DETAILS
334	IR-3	IRRIGATION DETAILS & NOTES
335	IR-4	IRRIGATION NOTES

PLOT DATE: 6/10/2014 8:39 AM BY: HSCAI1

NO.	DATE	ISSUED FOR	BY

XREFs= ..\Tblock\44238-004-BP3-TB

DESIGNED G.A.B.
DRAWN H.F.M.
CHECKED J.N.M.
PROJ. ENGR. G.A.B.

H. A. VIDAL P.E.
No. 37882

HAZEN AND SAWYER
Environmental Engineers & Scientists
4000 Hollywood Boulevard, Suite 750N
Hollywood, Florida 33021
Certificate of Authorization Number: 2771

SCALE NTS

CLIENTS PROJECT: –
ENGINEERS PROJECT: 44238-004
CAD REFERENCE: 44238-004BP3-G03

NORTH MIAMI FLORIDA
CITY OF NORTH MIAMI
PUBLIC WORKS UTILITIES

WINSON WATER TREATMENT PLANT
BID PACKAGE 3: WTP REHABILITATION
LIST OF DRAWINGS
SHEET 2

DATE: JUNE 2014
SHEET: 3 OF 335
DRAWING: G-03

PERMITTING

File = H:\44238-004\Drawings\Bid Package 3 - WTP Rehab\General\44238-004BP3-G03 Saved by HScai1 Save date = 6/9/2014 8:19 PM

SYMBOLS

- SOLENOID VALVE
- MOTOR OPERATED VALVE
- BALL VALVE
- BUTTERFLY VALVE/DAMPER
- DIAPHRAGM VALVE
- CHECK VALVE
- GATE VALVE
- PLUG VALVE
- PRESSURE REDUCING VALVE
- GLOBE VALVE
- HOSE BIBB (PLAN)
- HOSE BIBB (ELEVATION)
- REDUCER (SINGLE LINE)
- REDUCER (DOUBLE LINE)
- VENTURI METER
- UNION
- MECHANICAL COUPLING
- HARNESSED MECHANICAL COUPLING
- GROOVED COUPLING
- FLANGED JOINT
- MECHANICAL JOINT
- PIPE SUPPORT
- FIRE HYDRANT
- MANHOLE
- SEALED MANHOLE
- EXISTING STRUCTURE OR UTILITY
- NEW STRUCTURE OR UTILITY–THIS CONTRACT
- EXISTING PIPELINE (DOUBLE LINE IF SCALE OF DRAWING PERMITS)
- IF SCALE OF DRAWING PERMITS)
- NEW PIPELINE–THIS CONTRACT (DOUBLE LINE SLUICE GATE
- SLIDE GATE
- STOP LOG
- PIPE MATERIAL CHANGE
- PROPERTY LINE
- PROPOSED STORM WATER SWALE
- PROPOSED ASPHALT PAVEMENT
- PROPOSED SIDEWALK
- PROPOSED PAVERS
- MILL EXISTING ASPHALT AND RESURFACE
- PROPOSED CONCRETE PAVEMENT

ABBREVIATIONS

VALVES, FITTINGS, ETC.

ARV	AIR RELIEF VALVE
BF	BLIND FLANGE
BFV	BUTTERFLY VALVE
BV	BALL VALVE
CLV	CHLORINE GAS VALVE UNDER VACUUM
CPLG	COUPLING
CV	CHECK VALVE
EXP. JT.	EXPANSION JOINT
FD	FLOOR DRAIN
FDA	FOOD AND DRUG ADMINISTRATION
FH	FIRE HYDRANT
FLG, F	FLANGE
FTG	FITTING
GV	GATE VALVE
HB	HOSE BIBB
HIC	HAND INDICATING CONTROL
LR	LONG RADIUS
MC	MECHANICAL COUPLING
MJ	MECHANICAL JOINT
NPT	NATIONAL PIPE THREAD
PE	PLAIN END
PO	PUSH ON
PRV	PRESSURE RELIEF VALVE
P.S.	PUMP STATION
PV	PLUG VALVE
RD	ROOF DRAIN
RJ	RESTRAINED JOINT
SOV	SOLENOID OPERATED VALVE
THD	THREADED
VAC	VACUUM

PIPING

CIP	CAST IRON PIPE
CMP	CORRUGATED METAL PIPE
CPLG, C	COUPLING
CU	COPPER
DIP	DUCTILE IRON PIPE
FM	FORCE MAIN
FRP	FIBERGLASS REINFORCED PIPE
GSP	GALVANIZED STEEL PIPE
HDPE	HIGH DENSITY POLYETHYLENE
IPS	IRON PIPE SIZE
PCCP	PRESTRESSED CONCRETE CYLINDER PIPE
PVC	POLYVINYLCHLORIDE
RCP	REINFORCED CONCRETE PIPE
RCPP	REINFORCED CONCRETE PRESSURE PIPE

GENERAL

AA	AQUEQUS AMMONIA
A/C	AIR CONDITIONER
AB	ANCHOR BOLT
AIR	AIR SCOUR
AL, ALUM	ALUMINUM
∠	ANGLE
APPROX.	APPROXIMATE
ARCH.	ARCHITECTURAL
BD	BASIN DRAIN
BLDG	BUILDING
BLK.	BLOCK
BS	BACKWASH SUPPLY
BOTT	BOTTOM
BP	BID PACKAGE
BWW	BACKWASH WASTE
BWS	BACKWASH SUPPLY
CB	CATCH BASIN
CC	CENTER TO CENTER
CHK'D	CHECKERED
CHLOR, CL_2	CHLORINE
℄	CENTER LINE
CLR.	CLEAR
CO	CLEAN OUT
CO.	COMPANY
COL	COLUMN
CONC.	CONCRETE
CONST.	CONSTRUCTION
CONT.	CONTINUOUS
CONTR.	CONTRACTOR
DEC	DECANT
DET	DETAIL
DIA	DIAMETER
DIAG	DIAGONAL
DIM	DIMENSION
DISCH	DISCHARGE
DN	DOWN
DR	DRAIN
DWG	DRAWING
DWL.	DOWEL
EA	EACH
ECC	ECCENTRIC
EE	EACH END
EF	EACH FACE
EFF	EFFLUENT
EL ELEV	ELEVATION
ELEC.	ELECTRIC
EPA	ENVIRONMENTAL PROTECTION AGENCY
EQUIP	EQUIPMENT
EW	EACH WAY
EXH	EXHAUST
EXIST	EXISTING
EXP	EXPANSION
EXT	EXTERIOR
FD	FILTER DRAIN
FE	FIRE EXTINGUISHER OR FILTER EFFLUENT
FF	FINISHED FLOOR
FI	FILTER INFLUENT OR FILTER FEED
FIG	FIGURE
FIN	FINISH
FL	FLOOR
FT	FOOT
FTG	FOOTING
FW	FILTERED WATER
GALV	GALVANIZED
GD	GRAVITY DRAIN
GR	GRADE
HORIZ	HORIZONTAL
HP	HIGH POINT
HS	HYPOCHLORITE SOLUTION
HSP	HIGH SERVICE PUMP
HSPS	HIGH SERVICE PUMP STATION
HWH	HOT WATER HEATER
HWL	HIGH WATER LEVEL
ID	INSIDE DIAMETER
IF	INSIDE FACE
INF	INFLUENT
INJ	INJECTION
INSUL	INSULATION
INT	INTERIOR
INV	INVERT
IQ	IRRIGATION QUALITY
ISO	ISOLATION
JB	JUNCTION BOX
JT, J	JOINT
LAT.	LATERIAL
LBS	POUNDS
LBS/FT	POUNDS PER FOOT
LG	LONG
LGTH	LENGTH
LN	LINE
LOC	LOCATION
LP	LOW POINT OR LIQUID PETROLEUM
L.P.	LIGHT POLE
LWL	LOW WATER LEVEL
MAX	MAXIMUM
MB	MAILBOX
MECH, M	MECHANICAL
MFGR	MANUFACTURER
MG	MILLON GALLON
MH	MANHOLE
MIN	MINIMUM
MO	MASONRY OPENING
NIC	NOT IN CONTRACT
No.	NUMBER
NSF	NATIONAL SCIENCE FOUNDATION
NTS	NOT TO SCALE
OC	ON CENTER
OD	OUTSIDE DIAMETER
OF	OUTSIDE FACE
P	POLYMER
OPNG	OPENING
P/L, ℙ	PROPERTY LINE
PC	POINT OF CURVATURE
PI	PRESSURE INDICATOR (GAUGE)
P.I.	POINT OF INTERSECTION
PO	POLYMER SOLUTION
POT	POTABLE
PROP	PROPOSED
PSI	POUNDS PER SQUARE INCH
PT	POINT OF TANGENCY
PVT	PAVEMENT
PW	POTABLE WATER
R/W, ROW	RIGHT OF WAY
RAD, R	RADIUS
RECIR	RECIRCULATION
RED	REDUCER
REHAB	REHABILITATION
REINF	REINFORCING
REQ'D	REQUIRED
REST.	RESTRAINED
REV	REVISION
RJ	RESTRAINED JOINT
RW	RAW WATER
SA	SAMPLE WATER
SAN	SANITARY
SECT	SECTION
℄	SECTION LINE
SH	SODIUM HYPOCHLORITE
SHT	SHEET
SL	SAMPLE LINE
SPEC	SPECIFICATION
SQ	SQUARE
SS	STAINLESS STEEL
SSS	SURFACE SCOUR SUPPLY
STA	STATION
STD	STANDARD
STL	STEEL
STRUC	STRUCTURAL
SYMM	SYMMETRICAL
T&B	TOP AND BOTTOM
TBD	TO BE DETERMINED
TEMP	TEMPORARY
THK	THICK
TI	TEMPERATURE INDICATOR
TOC	TOP OF CONCRETE
TOS	TOP OF SLAB
TYP	TYPICAL
VERT	VERTICAL
VTR	VENT THROUGH ROOF
W	WIDE
W/	WITH
W/L	WATER LEVEL
W/MO	WITH MOTOR OPERATOR
W/O	WITH OUT
WTR	WATER
WWF	WELDED WIRE FABRIC

SECTION AND DETAIL IDENTIFICATION

SECTION IDENTIFICATION

(1) SECTION CUT ON DRAWING C–1:

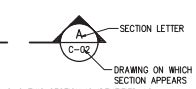

(2) ON DRAWING C–2 THIS SECTION IS IDENTIFIED AS:

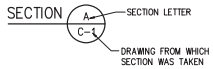

DETAIL IDENTIFICATION

(1) DETAIL CALL–OUT ON DRAWING C–1 AS:

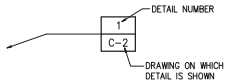

(2) ON DRAWING C–2 THIS DETAIL IDENTIFIED AS:

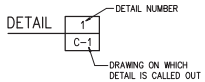

STANDARD DETAIL IDENTIFICATION

(1) DETAIL CALL–OUT ON PLAN OR SECTION:

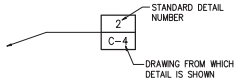

(2) ON DRAWING C–4 THIS DETAIL IDENTIFIED AS:

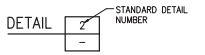

NOTE: IF PLAN AND SECTION (OR DETAIL CALL–OUT AND DETAIL) ARE SHOWN ON SAME DRAWING, DRAWING NUMBER IS REPLACED BY A DASH.

NOTES:

(1) ELECTRICAL SYMBOLS SHOWN ON ELECTRICAL SHEETS.

(2) FOR WELDING SYMBOLS USE AMERICAN WELDING SOCIETY STANDARD SYMBOLS. SEE AMERICAN INSTITUTE OF STEEL CONSTRUCTION MANUAL.

* DENOTES DIMENSIONS OR ELEVATIONS DEPENDENT ON EQUIPMENT SUPPLIED.

NO.	DATE	ISSUED FOR	BY

DESIGNED G.A.B.
DRAWN L.M.S.
CHECKED J.N.M.
PROJ. ENGR. G.A.B.

H. J. VIDAL P.E.
No. 37882

HAZEN AND SAWYER
Environmental Engineers & Scientists
4000 Hollywood Boulevard, Suite 750N
Hollywood, Florida 33021
Certificate of Authorization Number: 2771

SCALE NTS

CLIENTS PROJECT: –
ENGINEERS PROJECT: 44238–004
CAD REFERENCE: 44238–004BP3–G04

NORTH MIAMI FLORIDA
CITY OF NORTH MIAMI
PUBLIC WORKS UTILITIES

WINSON WATER TREATMENT PLANT
BID PACKAGE 3: WTP REHABILITATION
ABBREVIATIONS, SYMBOLS AND LEGEND

DATE: JUNE 2014
SHEET: 4 OF 335
DRAWING: G–04

PERMITTING

PLOT DATE: 6/10/2014 8:40 AM BY: HSCALII
XREFs= ..\Tblock\44238–004–BP3–TB
File = H:\44238–004\Drawings\Bid Package 3 – WTP Rehab\General\44238–004BP3–G04 Saved by HsCal2 Save date = 6/9/2014 8:01 PM

GENERAL NOTES:

1. DRAWINGS THAT ILLUSTRATE EXISTING STRUCTURES, PIPING, ELECTRICAL AND EQUIPMENT ARE BASED UPON RECORD DRAWINGS AVAILABLE UPON REQUEST FOR GENERAL INFORMATIONAL PURPOSES ONLY. REFERENCE THE SECTION ENTITLED "SUMMARY OF WORK".

2. FIELD OBSERVATIONS INDICATE THAT FIELD CONDITIONS DO NOT FULLY MATCH THE ABOVE REFERENCED RECORD DRAWINGS.

3. EXISTING SITE PLAN IS BASED UPON A BOUNDRY AND TOPOGRAPHIC SURVEY PREPARED BY CRAVEN THOMPSON AND ASSOCIATES, INC. (CTA) DATED 03-10-10 AND LABELED CTA PROJECT No. 10-0013-001

4. ALL ELEVATIONS ARE BASED ON THE NATIONAL GEODETIC VERTICAL DATUM OF 1929 (NGVD '29) AND REFERENCED TO MIAMI-DADE COUNTY BENCHMARK N-364, A PK NAIL IN SQUARE BRASS WASHER, TOP OF CURB INLET STRUCTURE AT SOUTHEAST CORNER OF N.W. 17 AVENUE AND N.W. 119 STREET. ELEVATION = 12.52.

5. YARD PIPING DRAWINGS WERE GENERATED FROM A COMBINATION OF NEW TOPOGRAPHIC SURVEY DATA AND EXISTING RECORD DRAWINGS, COORDINATES PROVIDES ARE FOR GENERAL INFORMATION AND MUST BE FIELD VERIFIED BY THE CONTRACTOR PRIOR TO PREPARATION OF PIPE SYSTEM LAYOUT SUBMITTALS FOR ENGINEER REVIEW, COMMENT AND ACCEPTANCE. REFERENCE THE SECTIONS ENTITLED "SUMMARY OF WORK", "FIELD ENGINEERING", "SUBMITTALS" AND "PIPING, GENERAL" FOR ADDITIONAL DETAILS AND REQUIREMENTS.

6. LOCATION, SIZE, MATERIAL, ALIGNMENT AND ELEVATIONS OF EXISTING FACILITIES HAVE BEEN DETERMINED FROM AVAILABLE RECORDS. THIS INFORMATION IS FURNISHED AS A GUIDE FOR THE CONTRACTOR. THE ENGINEER AND THE OWNER DO NOT GUARANTEE THE ACCURACY OF THESE DATA. THE CONTRACTOR SHALL BE FULLY RESPONSIBLE FOR DETERMINING THE LOCATION AND PROTECTING ALL TYPES OF UTILITIES AND STRUCTURES ENCOUNTERED DURING THE COURSE OF OPERATION ON THIS PROJECT.

7. CONTRACTOR RETAINS FULL RESPONSIBILITY FOR FIELD VERIFICATION OF ALL IMPROVEMENTS TO BE REMOVED FOR THIS WORK. VERIFICATION SHALL INCLUDE STRUCTURAL, ARCHITECTURAL, HVAC, PLUMBING, PROCESS PIPING, ELECTRICAL, IRRIGATION, CONTROLS, EQUIPMENT, FILTER MEDIA AND ANY AND ALL OTHER EXISTING EQUIPMENT WITHIN THE BOUNDARY OF THE WORK, WHETHER SHOWN OR NOT.

8. THE CONTRACTOR IS REQUIRED TO OBTAIN WRITTEN APPROVAL FROM THE ENGINEER FOR ANY DEVIATIONS FROM THE PLANS AND/OR SPECIFICATIONS.

9. THE CONTRACTOR SHALL FIELD VERIFY ALL DIMENSIONS AND ELEVATIONS PRIOR TO COMMENCEMENT OF CONSTRUCTION AND SHALL NOTIFY THE ENGINEER IMMEDIATELY OF ANY REQUIRED PLAN DEVIATIONS.

10. THE CONTRACTOR SHALL BE RESPONSIBLE FOR OBTAINING A DEWATERING PERMIT FROM THE SOUTH FLORIDA WATER MANAGEMENT DISTRICT IF REQUIRED.

11. RESTRAINED JOINT PIPE SHALL BE USED FOR ALL PIPING ON THIS PROJECT. THRUST BLOCKS SHALL NOT BE PERMITTED.

12. CONTRACTOR SHALL PROVIDE A MINIMUM VERTICAL CLEARANCE OF 6" BETWEEN ALL LINES THAT CROSS. CROSSINGS WITH POTABLE WATER LINES SHALL BE AS SHOWN ON THE DRAWINGS.

13. THE CONTRACTOR SHALL RECORD ELEVATIONS OF EXISTING BURIED UTILITIES AT ALL ENCOUNTERED CROSSINGS WITH NEW WORK.

14. ALL CONNECTIONS TO EXISTING PIPING SHALL BE MADE UNDER THE DIRECTION OF THE CITY.

15. MINIMUM DEPTH OF COVER FOR ALL UNDERGROUND PIPING SHALL BE 36" EXCEPT WHERE SHOWN OTHERWISE ON PLANS.

16. PIPE DEFLECTION SHALL NOT EXCEED 75% OF THE MAXIMUM DEFLECTION RECOMMENDED BY THE MANUFACTURER.

17. THE CONTRACTOR SHALL BE RESPONSIBLE AT ALL TIMES THROUGHOUT THE DURATION OF CONSTRUCTION AND UNTIL ACCEPTANCE OF THE WORK FOR THE PROTECTION OF EXISTING AND NEWLY INSTALLED UTILITIES FROM DAMAGE OR DISRUPTION OF SERVICE.

18. THE CONTRACTOR SHALL ADJUST TO FINAL GRADE ALL EXISTING UTILITY CASTINGS INCLUDING VALVE BOXES, MANHOLES, HAND HOLES, PULL BOXES, INLETS AND SIMILAR STRUCTURES IN CONSTRUCTION AREA TO BE OVERLAID WITH ASPHALT.

19. EXISTING BURIED PIPE AND CONDUIT 2" DIAMETER AND SMALLER IS NOT NECESSARILY SHOWN. ELECTRICAL AND INSTRUMENTATION DUCT BANKS NOT SHOWN. WHEN EXCAVATING, THE CONTRACTOR SHALL TAKE ALL NECESSARY PRECAUTIONS TO AVOID DAMAGE TO UNDERGROUND UTILITIES.

20. THE CONTRACTOR SHALL MAKE EXPLORATORY EXCAVATIONS TO VERIFY LOCATIONS AND ELEVATIONS OF UNDERGROUND UTILITIES THAT MAY INTERFERE WITH THE WORK. THE NUMBER OF EXPLORATORY EXCAVATIONS SHALL BE SUFFICIENT TO DETERMINE ALIGNMENT, LOCATION AND ELEVATION.

21. THE WORK TO BE PERFORMED UNDER THESE CONTRACT DOCUMENTS IS AT A FUNCTIONING WATER TREATMENT PLANT WITH A PERMITED WATER SUPPLY WELLFIELD. THE CONTRACTOR SHALL COMPLY WITH REQUIREMENTS OF THE SPECIFICATIONS, REGULATORY AGENCIES, AND FACILITY OPERATIONS STAFF AT ALL TIMES.

22. CONTRACTOR SHALL REFER TO DIVISION 1 FOR FIELD ENGINEERING, SURVEY CONTROL AND RECORD DRAWING REQUIREMENTS.

23. THE BEARINGS SHOWN HEREON ARE BASED ON THE CENTERLINE OF N.W. 121 STREET BEARING NORTH 87°08'29" EAST. SAID LINE BEING BASED ON THE FLORIDA STATE PLANE EAST ZONE SYSTEM AS COMPUTED USING REAL TIME KINEMATICS (RTK) VECTOR OBSERVATIONS AS OBTAINED USING A TRIMBLE R8 ROVER AS OBSERVED FROM A NATIONAL GEODETIC STATION (NGS) STATION AC2415" (H-120) AND FROM TWO CONTINUOUSLY OPERATING REFERENCE STATIONS (CORS) "LAURDERDALE" AND "MIAMI 3", AS OPERATED BY FLORIDA DEPARTMENT OF TRANSPORTATION (F.D.O.T.) STATE-WIDE PERMANENT REFERENCE NETWORK.

24. THE ABOVE MENTIONED RTK VECTOR OBSERVATIONS WERE PROCESSED AND COORDINATES WERE CALCULATED UTILIZING F.D.O.T. "VECTOR NT" LEAST SQUARE ADJUSTMENT SOFTWARE FROM THE FOLLOW REFERENCE STATIONS:

F.D.O.T. - "LAUDERDALE"	N: 677867.5511	E: 927328.4435 (LAUD)
F.D.O.T. - "MIAMI 3"	N: 509427.4891	E: 931640.1497 (MIAMI)
NGS - "AC2415"	N: 570080.0519	E: 896958.5443 (H-120)

NO.	DATE	ISSUED FOR	BY

DESIGNED G.A.B.
DRAWN G.P.B.
CHECKED J.N.M.
PROJ. ENGR. G.A.B.

H. J. VIDAL P.E.
No. 37882

HAZEN AND SAWYER
Environmental Engineers & Scientists
4000 Hollywood Boulevard, Suite 750N
Hollywood, Florida 33021
Certificate of Authorization Number: 2771

SCALE NTS

CLIENTS PROJECT: –
ENGINEERS PROJECT: 44238-004
CAD REFERENCE: 44238-004BP3-G05

NORTH MIAMI FLORIDA
CITY OF NORTH MIAMI
PUBLIC WORKS UTILITIES

WINSON WATER TREATMENT PLANT
BID PACKAGE 3: WTP REHABILITATION
GENERAL NOTES

DATE: JUNE 2014
SHEET: 5 OF 335
DRAWING: G-05

PERMITTING

PLOT DATE: 6/10/2014 8:42 AM BY: HSCALII
XREFs= .\Tblock\44238-004-BP3-TB
File = H:\44238-004\Drawings\Bid Package 3 - WTP Rehab\General\44238-004BP3-G05 Saved by HsCal2 Save date = 6/9/2014 7:18 PM

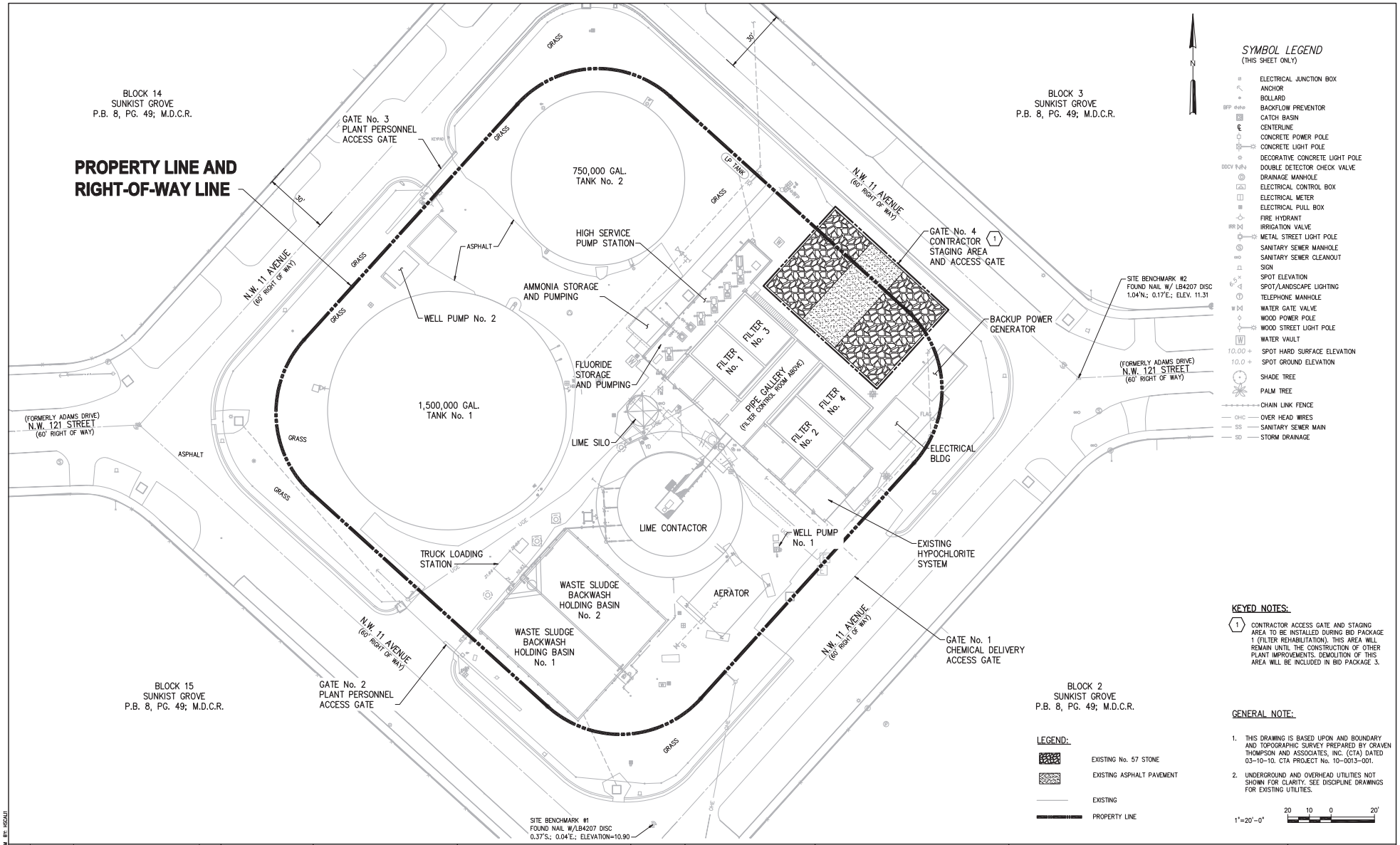

SYMBOL LEGEND
(THIS SHEET ONLY)

- ELECTRICAL JUNCTION BOX
- ANCHOR
- BOLLARD
- BFP — BACKFLOW PREVENTOR
- CATCH BASIN
- CENTERLINE
- CONCRETE POWER POLE
- CONCRETE LIGHT POLE
- DECORATIVE CONCRETE LIGHT POLE
- DDCV — DOUBLE DETECTOR CHECK VALVE
- DRAINAGE MANHOLE
- ELECTRICAL CONTROL BOX
- ELECTRICAL METER
- ELECTRICAL PULL BOX
- FIRE HYDRANT
- IRR — IRRIGATION VALVE
- METAL STREET LIGHT POLE
- SANITARY SEWER MANHOLE
- SANITARY SEWER CLEANOUT
- SIGN
- SPOT ELEVATION
- SPOT/LANDSCAPE LIGHTING
- TELEPHONE MANHOLE
- WATER GATE VALVE
- WOOD POWER POLE
- WOOD STREET LIGHT POLE
- WATER VAULT
- 10.00 + — SPOT HARD SURFACE ELEVATION
- 10.0 + — SPOT GROUND ELEVATION
- SHADE TREE
- PALM TREE
- CHAIN LINK FENCE
- OHC — OVER HEAD WIRES
- SS — SANITARY SEWER MAIN
- SD — STORM DRAINAGE

KEYED NOTES:

(1) CONTRACTOR ACCESS GATE AND STAGING AREA TO BE INSTALLED DURING BID PACKAGE 1 (FILTER REHABILITATION). THIS AREA WILL REMAIN UNTIL THE CONSTRUCTION OF OTHER PLANT IMPROVEMENTS. DEMOLITION OF THIS AREA WILL BE INCLUDED IN BID PACKAGE 3.

LEGEND:

- EXISTING No. 57 STONE
- EXISTING ASPHALT PAVEMENT
- EXISTING
- PROPERTY LINE

GENERAL NOTE:

1. THIS DRAWING IS BASED UPON AND BOUNDARY AND TOPOGRAPHIC SURVEY PREPARED BY CRAVEN THOMPSON AND ASSOCIATES, INC. (CTA) DATED 03-10-10. CTA PROJECT No. 10-0013-001.
2. UNDERGROUND AND OVERHEAD UTILITIES NOT SHOWN FOR CLARITY. SEE DISCIPLINE DRAWINGS FOR EXISTING UTILITIES.

1"=20'-0" 20 10 0 20'

NO.	DATE	ISSUED FOR	BY

DESIGNED G.A.B.
DRAWN L.M.S.
CHECKED J.N.M.
PROJ. ENGR. G.A.B.

H. J. VIDAL P.E. No. 37882

HAZEN AND SAWYER
Environmental Engineers & Scientists
4000 Hollywood Boulevard, Suite 750N
Hollywood, Florida 33021
Certificate of Authorization Number: 2771

SCALE 1"=20'-0"

CLIENTS PROJECT: –
ENGINEERS PROJECT: 44238-004
CAD REFERENCE: 44238-004BP3-G06

NORTH MIAMI FLORIDA — CITY OF NORTH MIAMI PUBLIC WORKS UTILITIES

WINSON WATER TREATMENT PLANT
BID PACKAGE 3: WTP REHABILITATION
EXISTING SITE PLAN

DATE: JUNE 2014
SHEET: 6 OF 335
DRAWING: G-06

PERMITTING

PLOT DATE: 6/10/2014 8:44 AM BY: HSCALIT

XREFs= ..\Base-BP3\C-Site-Survey-X,..\Tblock\44238-004-BP3-TB,..\Base-BP3\C-BP3-SiteUtility,..\Base-BP3\C-Site-Pipe-X

File = H:\44238-004\Drawings\Bid Package 3 - WTP Rehab\General\44238-004BP3-G06 Saved by HsCad2 Save date = 6/9/2014 7:31 PM

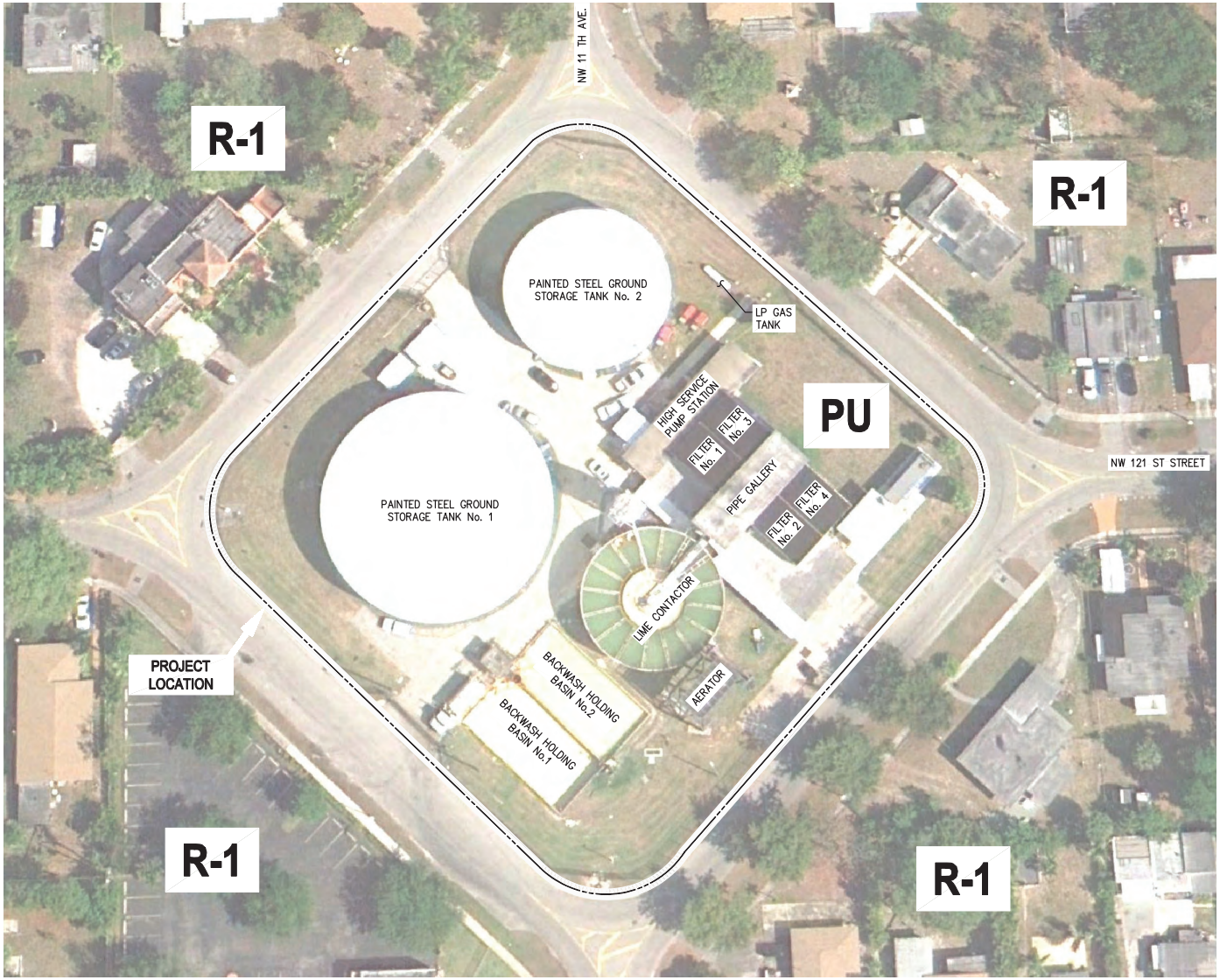

N

PROPERTY ADDRESS:

12098 NORTHWEST 11 th Ave
NORTH MIAMI, FLORIDA 33168

PROPERTY INFORMATION:

FOLIO: 06-2126-016-7320
ZONING: PUBLIC USE

PROPERTY OWNER INFORMATION:

OWNER: CITY OF NORTH MIAMI
CONTACT: PAUL VIDA
PHONE: 305-953-2854

PROPERTY LOCATION:

COUNTY: MIAMI DADE
TOWNSHIP: 52S
RANGE: 41E
SECTION: 26
LATITUDE: 25° 53' 08" N
LONGITUDE: 80° 13' 01" W

FLOOD INFORMATION:

FLOOD ZONE: ZONE X (PER FEDERAL EMERGENCY MANAGEMENT AGENCY FLOOD INSURANCE RATE MAP NUMBER 12086C0139L, REVISED SEPTEMBER 11, 2009)

ZONING NOTE:

ZONING INFORMATION BASED UPON CITY OF NORTH MIAMI ZONING MAP.

ZONING LEGEND:

PU : PUBLIC USE

R-1: RESIDENTIAL

NO.	DATE	ISSUED FOR	BY

DESIGNED G.A.B.
DRAWN G.P.B.
CHECKED J.N.M.
PROJ. ENGR. G.A.B.

H. J. VIDAL P.E.
No. 37882

HAZEN AND SAWYER
Environmental Engineers & Scientists
4000 Hollywood Boulevard, Suite 750N
Hollywood, Florida 33021
Certificate of Authorization Number: 2771

SCALE NTS

CLIENTS PROJECT: –
ENGINEERS PROJECT: 44238-004
CAD REFERENCE: 44238-004BP3-G07

NORTH MIAMI FLORIDA
CITY OF NORTH MIAMI
PUBLIC WORKS UTILITIES

WINSON WATER TREATMENT PLANT
BID PACKAGE 3: WTP REHABILITATION
EXISTING SITE AERIAL AND ZONING MAP

DATE: JUNE 2014
SHEET: 7 OF 335
DRAWING: G-07

PERMITTING

PLOT DATE: 6/10/2014 8:47 AM BY: HSCALII
XREFs= ..\Block\44238-004-BP3-TB
File = H:\44238-004\Drawings\Bid Package 3 - WTP Rehab\General\44238-004BP3-G07 Saved by lmsoriano Save date = 6/9/2014 8:32 PM

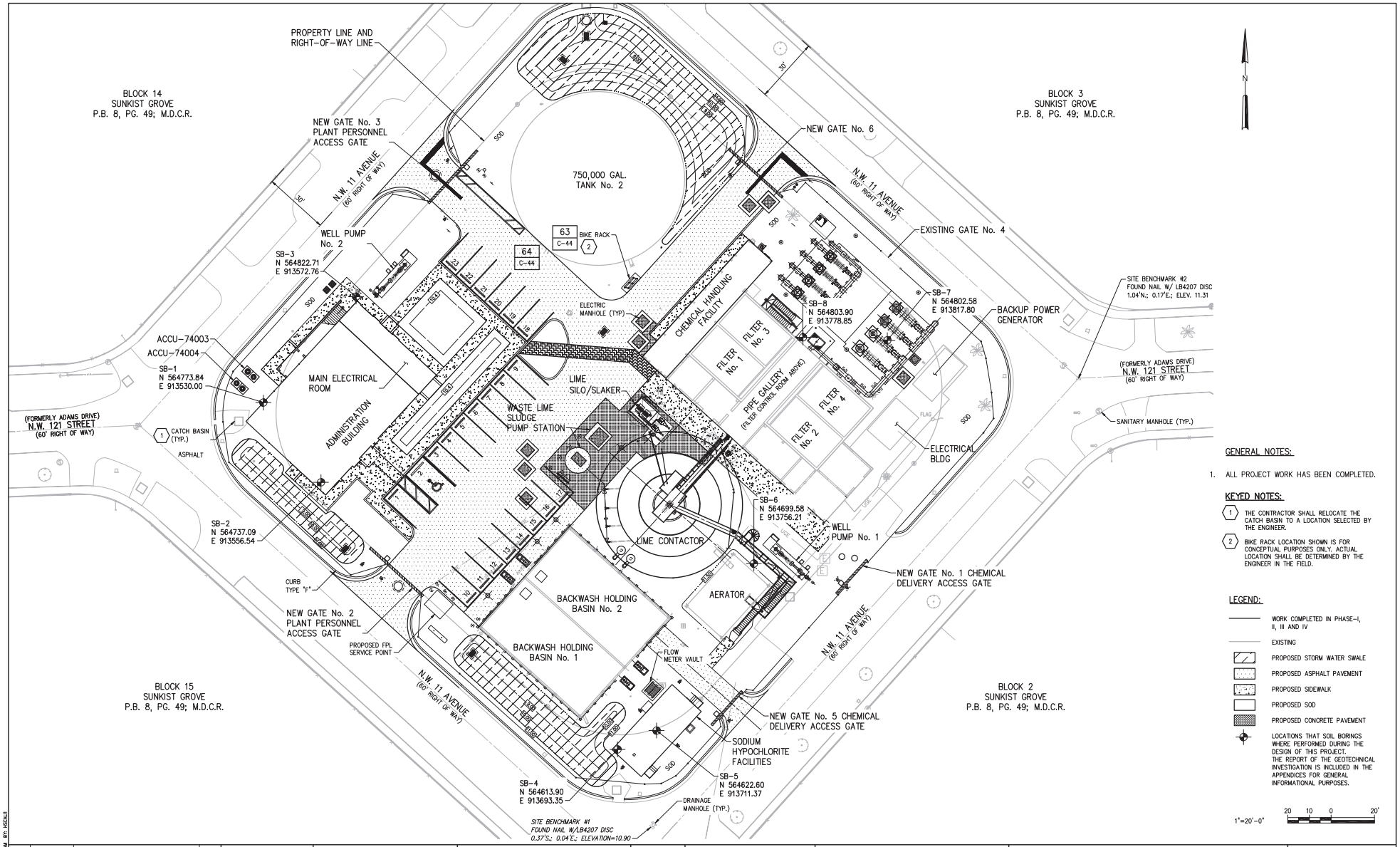

GENERAL NOTES:

1. ALL PROJECT WORK HAS BEEN COMPLETED.

KEYED NOTES:

1. THE CONTRACTOR SHALL RELOCATE THE CATCH BASIN TO A LOCATION SELECTED BY THE ENGINEER.
2. BIKE RACK LOCATION SHOWN IS FOR CONCEPTUAL PURPOSES ONLY. ACTUAL LOCATION SHALL BE DETERMINED BY THE ENGINEER IN THE FIELD.

LEGEND:

- WORK COMPLETED IN PHASE-I, II, III AND IV
- EXISTING
- PROPOSED STORM WATER SWALE
- PROPOSED ASPHALT PAVEMENT
- PROPOSED SIDEWALK
- PROPOSED SOD
- PROPOSED CONCRETE PAVEMENT
- LOCATIONS THAT SOIL BORINGS WHERE PERFORMED DURING THE DESIGN OF THIS PROJECT. THE REPORT OF THE GEOTECHNICAL INVESTIGATION IS INCLUDED IN THE APPENDICES FOR GENERAL INFORMATIONAL PURPOSES.

1"=20'-0" 20 10 0 20'

NO.	DATE	ISSUED FOR	BY
1	4/1/14	100% QA COMMENTS	H.J.V.

PLOT DATE: 6/10/2014 8:49 AM BY: HSCALII

DESIGNED G.A.B.
DRAWN L.M.S.
CHECKED J.N.M.
PROJ. ENGR. G.A.B.

H. J. VIDAL P.E. No. 37882

HAZEN AND SAWYER
Environmental Engineers & Scientists
4000 Hollywood Boulevard, Suite 750N
Hollywood, Florida 33021
Certificate of Authorization Number: 2771

SCALE 1"=20'-0"

CLIENTS PROJECT: –
ENGINEERS PROJECT: 44238-004
CAD REFERENCE: 44238-004BP3-G08

NORTH MIAMI FLORIDA
CITY OF NORTH MIAMI
PUBLIC WORKS UTILITIES

WINSON WATER TREATMENT PLANT
BID PACKAGE 3: WTP REHABILITATION
PROPOSED SITE PLAN

DATE: JUNE 2014
SHEET: 8 OF 335
DRAWING: G-08

PERMITTING

File = H:\44238-004\Drawings\Bid Package 3 - WTP Rehab\General\44238-004BP3-G08 Saved by HsCal2 Save date = 6/9/2014 8:23 PM

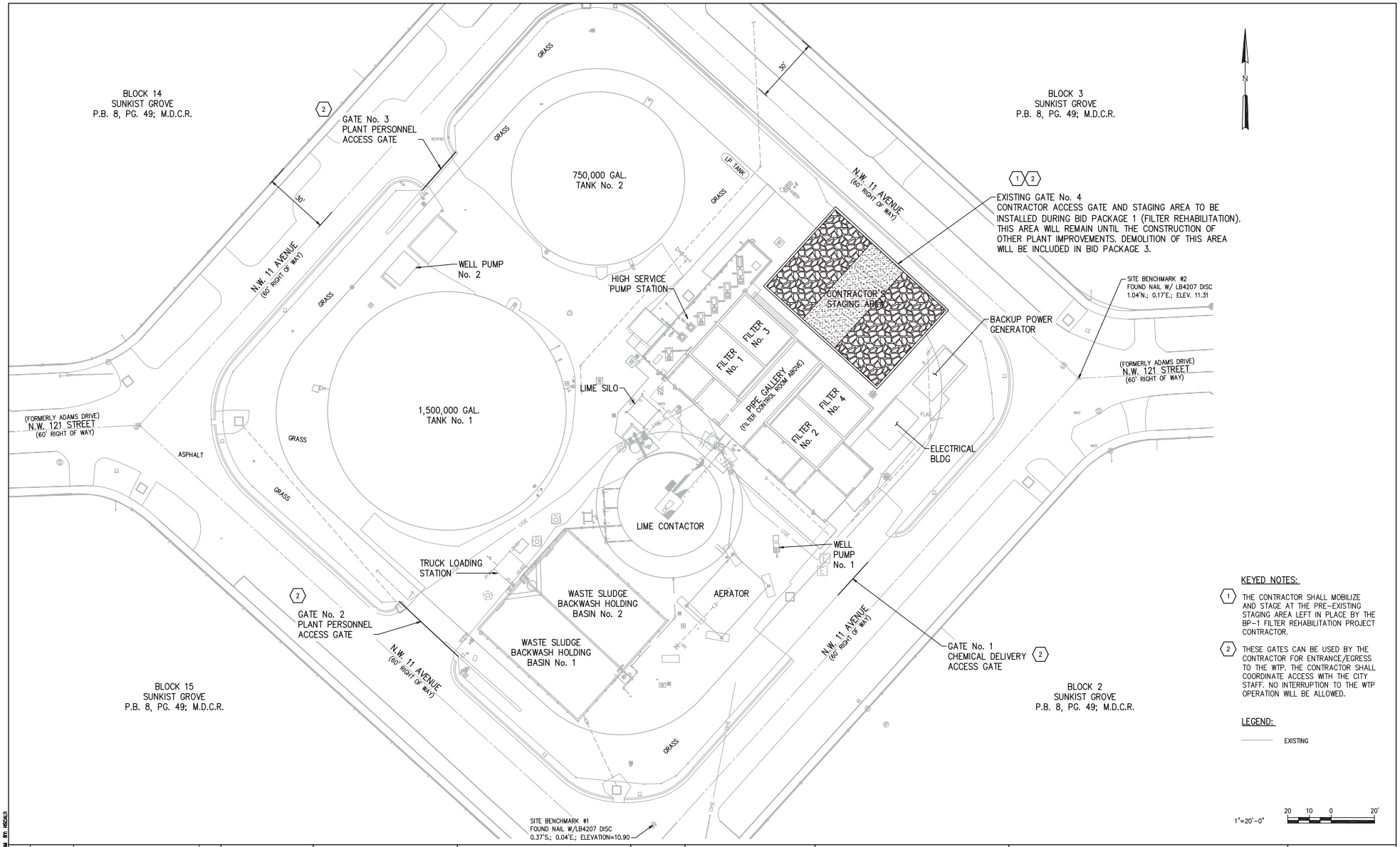

KEYED NOTES:

1. THE CONTRACTOR SHALL MOBILIZE AND STAGE AT THE PRE-EXISTING STAGING AREA LEFT IN PLACE BY THE BP-1 FILTER REHABILITATION PROJECT CONTRACTOR.
2. THESE GATES CAN BE USED BY THE CONTRACTOR FOR ENTRANCE/EGRESS TO THE WTP. THE CONTRACTOR SHALL COORDINATE ACCESS WITH THE CITY STAFF. NO INTERRUPTION TO THE WTP OPERATION WILL BE ALLOWED.

LEGEND:

EXISTING

NO.	DATE	ISSUED FOR	BY

DESIGNED G.A.B.
DRAWN L.M.S.
CHECKED J.N.M.
PROJ. ENGR. G.A.B.

H. J. VIDAL P.E.
No. 37882

HAZEN AND SAWYER
Environmental Engineers & Scientists
4000 Hollywood Boulevard, Suite 750N
Hollywood, Florida 33021
Certificate of Authorization Number: 2771

SCALE 1"=20'-0"

CLIENTS PROJECT: –
ENGINEERS PROJECT: 44238-004
CAD REFERENCE: 44238-004BP3-G09

NORTH MIAMI FLORIDA
CITY OF NORTH MIAMI
PUBLIC WORKS UTILITIES

WINSON WATER TREATMENT PLANT
BID PACKAGE 3: WTP REHABILITATION
PROPOSED STAGING PLAN – PHASE I

DATE: JUNE 2014
SHEET: 9 OF 335
DRAWING: G-09

PERMITTING

XREFs= ..\Base-BP3\C-Site-Survey-X,..\Tblock\44238-004-BP3-TB,..\Base-BP3\C-BP3-SiteUtility,..\Base-BP3\C-Site-Pipe-X

File = H:\44238-004\Drawings\Bid Package 3 - WTP Rehab\General\44238-004BP3-G09 Saved by HsCall2 Save date = 6/9/2014 9:05 PM

PLOT DATE: 6/10/2014 8:52 AM BY: HSCALI1

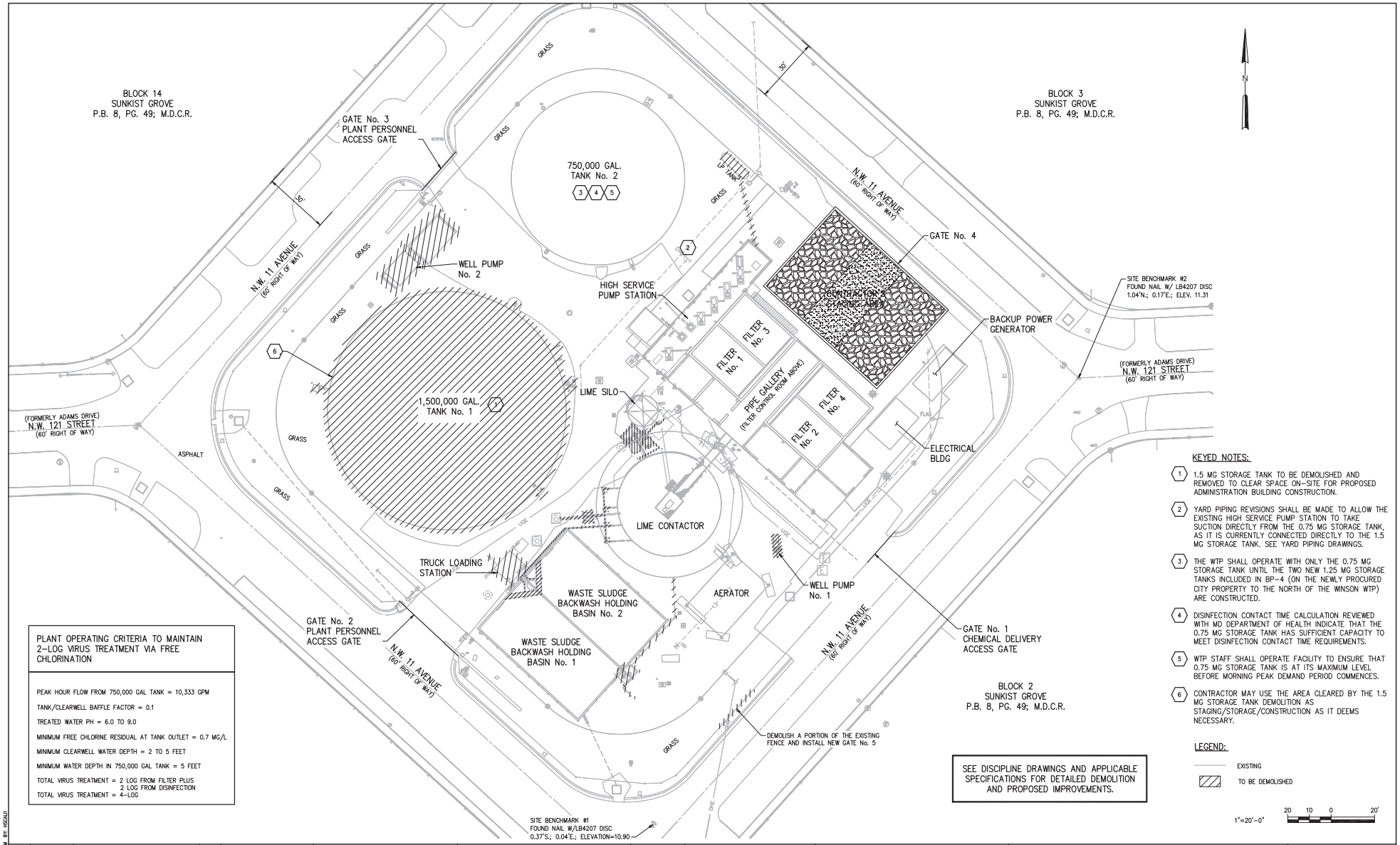

PLANT OPERATING CRITERIA TO MAINTAIN 2-LOG VIRUS TREATMENT VIA FREE CHLORINATION

PEAK HOUR FLOW FROM 750,000 GAL TANK = 10,333 GPM

TANK/CLEARWELL BAFFLE FACTOR = 0.1

TREATED WATER PH = 6.0 TO 9.0

MINIMUM FREE CHLORINE RESIDUAL AT TANK OUTLET = 0.7 MG/L

MINIMUM CLEARWELL WATER DEPTH = 2 TO 5 FEET

MINIMUM WATER DEPTH IN 750,000 GAL TANK = 5 FEET

TOTAL VIRUS TREATMENT = 2 LOG FROM FILTER PLUS
2 LOG FROM DISINFECTION
TOTAL VIRUS TREATMENT = 4-LOG

SEE DISCIPLINE DRAWINGS AND APPLICABLE SPECIFICATIONS FOR DETAILED DEMOLITION AND PROPOSED IMPROVEMENTS.

KEYED NOTES:

1. 1.5 MG STORAGE TANK TO BE DEMOLISHED AND REMOVED TO CLEAR SPACE ON-SITE FOR PROPOSED ADMINISTRATION BUILDING CONSTRUCTION.
2. YARD PIPING REVISIONS SHALL BE MADE TO ALLOW THE EXISTING HIGH SERVICE PUMP STATION TO TAKE SUCTION DIRECTLY FROM THE 0.75 MG STORAGE TANK, AS IT IS CURRENTLY CONNECTED DIRECTLY TO THE 1.5 MG STORAGE TANK. SEE YARD PIPING DRAWINGS.
3. THE WTP SHALL OPERATE WITH ONLY THE 0.75 MG STORAGE TANK UNTIL THE TWO NEW 1.25 MG STORAGE TANKS INCLUDED IN BP-4 (ON THE NEWLY PROCURED CITY PROPERTY TO THE NORTH OF THE WINSON WTP) ARE CONSTRUCTED.
4. DISINFECTION CONTACT TIME CALCULATION REVIEWED WITH MD DEPARTMENT OF HEALTH INDICATE THAT THE 0.75 MG STORAGE TANK HAS SUFFICIENT CAPACITY TO MEET DISINFECTION CONTACT TIME REQUIREMENTS.
5. WTP STAFF SHALL OPERATE FACILITY TO ENSURE THAT 0.75 MG STORAGE TANK IS AT ITS MAXIMUM LEVEL BEFORE MORNING PEAK DEMAND PERIOD COMMENCES.
6. CONTRACTOR MAY USE THE AREA CLEARED BY THE 1.5 MG STORAGE TANK DEMOLITION AS STAGING/STORAGE/CONSTRUCTION AS IT DEEMS NECESSARY.

LEGEND:

EXISTING

TO BE DEMOLISHED

NO.	DATE	ISSUED FOR	BY

DESIGNED G.A.B.
DRAWN L.M.S.
CHECKED J.N.M.
PROJ. ENGR. G.A.B.

H. J. VIDAL P.E.
No. 37882

HAZEN AND SAWYER
Environmental Engineers & Scientists
4000 Hollywood Boulevard, Suite 750N
Hollywood, Florida 33021
Certificate of Authorization Number: 2771

SCALE 1"=20'-0"

CLIENTS PROJECT: –
ENGINEERS PROJECT: 44238-004
CAD REFERENCE: 44238-004BP3-G10

NORTH MIAMI FLORIDA
CITY OF NORTH MIAMI
PUBLIC WORKS UTILITIES

WINSON WATER TREATMENT PLANT
BID PACKAGE 3: WTP REHABILITATION
PROPOSED STAGING PLAN
DEMOLITION PLAN – PHASE I

DATE: JUNE 2014
SHEET: 10 OF 335
DRAWING: G-10

PERMITTING

PLOT DATE: 6/10/2014 8:54 AM BY: HSCALIT

XREFs= ..\Base-BP3\C-Site-Survey-X,..\Tblock\44238-004-BP3-TB,..\Base-BP3\C-Site-Pipe-X,..\Base-BP3\C-BP3-SiteUtility

File = H:\44238-004\Drawings\Bid Package 3 - WTP Rehab\General\44238-004BP3-G10 Saved by HScalit Save date = 6/9/2014 5:26 PM

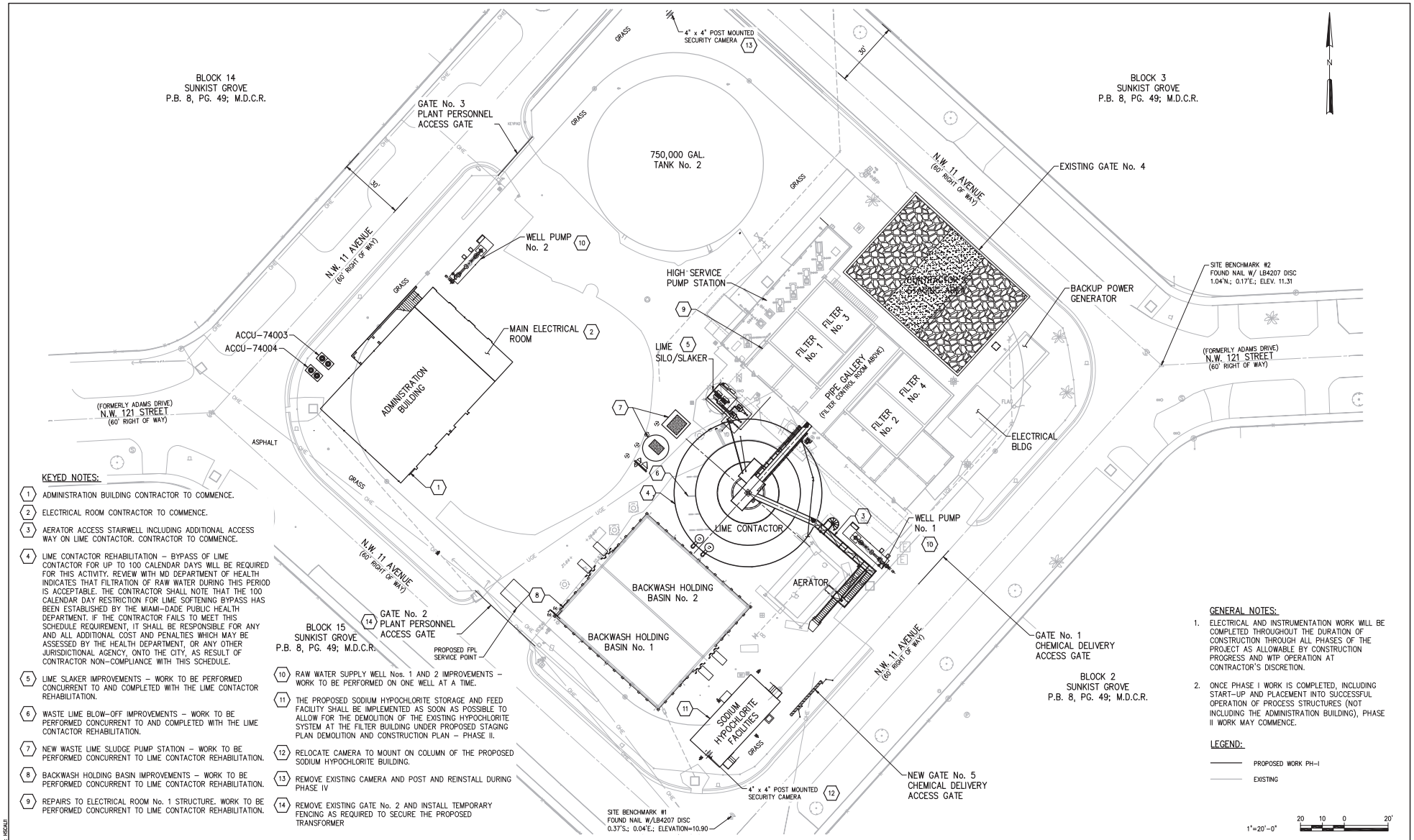

KEYED NOTES:

1. ADMINISTRATION BUILDING CONTRACTOR TO COMMENCE.
2. ELECTRICAL ROOM CONTRACTOR TO COMMENCE.
3. AERATOR ACCESS STAIRWELL INCLUDING ADDITIONAL ACCESS WAY ON LIME CONTACTOR. CONTRACTOR TO COMMENCE.
4. LIME CONTACTOR REHABILITATION – BYPASS OF LIME CONTACTOR FOR UP TO 100 CALENDAR DAYS WILL BE REQUIRED FOR THIS ACTIVITY. REVIEW WITH MD DEPARTMENT OF HEALTH INDICATES THAT FILTRATION OF RAW WATER DURING THIS PERIOD IS ACCEPTABLE. THE CONTRACTOR SHALL NOTE THAT THE 100 CALENDAR DAY RESTRICTION FOR LIME SOFTENING BYPASS HAS BEEN ESTABLISHED BY THE MIAMI-DADE PUBLIC HEALTH DEPARTMENT. IF THE CONTRACTOR FAILS TO MEET THIS SCHEDULE REQUIREMENT, IT SHALL BE RESPONSIBLE FOR ANY AND ALL ADDITIONAL COST AND PENALTIES WHICH MAY BE ASSESSED BY THE HEALTH DEPARTMENT, OR ANY OTHER JURISDICTIONAL AGENCY, ONTO THE CITY, AS RESULT OF CONTRACTOR NON-COMPLIANCE WITH THIS SCHEDULE.
5. LIME SLAKER IMPROVEMENTS – WORK TO BE PERFORMED CONCURRENT TO AND COMPLETED WITH THE LIME CONTACTOR REHABILITATION.
6. WASTE LIME BLOW-OFF IMPROVEMENTS – WORK TO BE PERFORMED CONCURRENT TO AND COMPLETED WITH THE LIME CONTACTOR REHABILITATION.
7. NEW WASTE LIME SLUDGE PUMP STATION – WORK TO BE PERFORMED CONCURRENT TO LIME CONTACTOR REHABILITATION.
8. BACKWASH HOLDING BASIN IMPROVEMENTS – WORK TO BE PERFORMED CONCURRENT TO LIME CONTACTOR REHABILITATION.
9. REPAIRS TO ELECTRICAL ROOM No. 1 STRUCTURE. WORK TO BE PERFORMED CONCURRENT TO LIME CONTACTOR REHABILITATION.
10. RAW WATER SUPPLY WELL Nos. 1 AND 2 IMPROVEMENTS – WORK TO BE PERFORMED ON ONE WELL AT A TIME.
11. THE PROPOSED SODIUM HYPOCHLORITE STORAGE AND FEED FACILITY SHALL BE IMPLEMENTED AS SOON AS POSSIBLE TO ALLOW FOR THE DEMOLITION OF THE EXISTING HYPOCHLORITE SYSTEM AT THE FILTER BUILDING UNDER PROPOSED STAGING PLAN DEMOLITION AND CONSTRUCTION PLAN – PHASE II.
12. RELOCATE CAMERA TO MOUNT ON COLUMN OF THE PROPOSED SODIUM HYPOCHLORITE BUILDING.
13. REMOVE EXISTING CAMERA AND POST AND REINSTALL DURING PHASE IV
14. REMOVE EXISTING GATE No. 2 AND INSTALL TEMPORARY FENCING AS REQUIRED TO SECURE THE PROPOSED TRANSFORMER

GENERAL NOTES:

1. ELECTRICAL AND INSTRUMENTATION WORK WILL BE COMPLETED THROUGHOUT THE DURATION OF CONSTRUCTION THROUGH ALL PHASES OF THE PROJECT AS ALLOWABLE BY CONSTRUCTION PROGRESS AND WTP OPERATION AT CONTRACTOR'S DISCRETION.
2. ONCE PHASE I WORK IS COMPLETED, INCLUDING START-UP AND PLACEMENT INTO SUCCESSFUL OPERATION OF PROCESS STRUCTURES (NOT INCLUDING THE ADMINISTRATION BUILDING), PHASE II WORK MAY COMMENCE.

LEGEND:

PROPOSED WORK PH-I

EXISTING

NO.	DATE	ISSUED FOR	BY
1	4/1/14	100% QA COMMENTS	H.J.V.

DESIGNED G.A.B.
DRAWN G.P.B.
CHECKED J.N.M.
PROJ. ENGR. G.A.B.

H. J. VIDAL P.E.
No. 37882

HAZEN AND SAWYER
Environmental Engineers & Scientists
4000 Hollywood Boulevard, Suite 750N
Hollywood, Florida 33021
Certificate of Authorization Number: 2771

SCALE 1"=20'-0"

CLIENTS PROJECT: –
ENGINEERS PROJECT: 44238-004
CAD REFERENCE: 44238-004BP3-G11

NORTH MIAMI FLORIDA
CITY OF NORTH MIAMI
PUBLIC WORKS UTILITIES

WINSON WATER TREATMENT PLANT
BID PACKAGE 3: WTP REHABILITATION

PROPOSED STAGING PLAN
CONSTRUCTION PLAN – PHASE I

DATE: JUNE 2014
SHEET: 11 OF 335
DRAWING: G-11

PERMITTING

PLOT DATE: 6/10/2014 8:58 AM BY: HSCALIT

File = H:\44238-004\Drawings\Bid Package 3 - WTP Rehab\General\44238-004BP3-G11 Saved by HsCalI2 Save date = 6/9/2014 7:14 PM

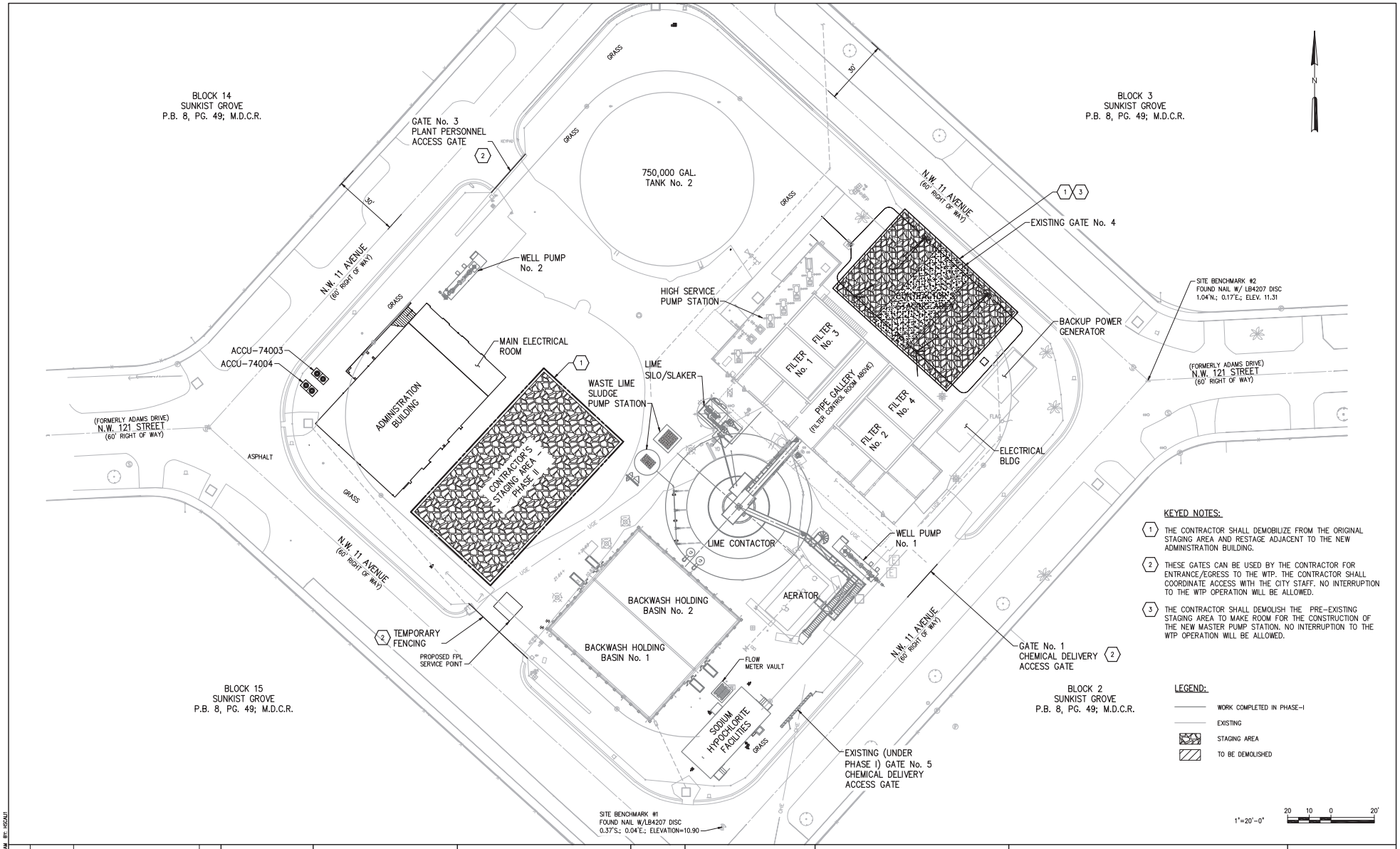

NO.	DATE	ISSUED FOR	BY

DESIGNED G.A.B.
DRAWN G.P.B.
CHECKED J.N.M.
PROJ. ENGR. G.A.B.

H. J. VIDAL P.E.
No. 37882

HAZEN AND SAWYER
Environmental Engineers & Scientists
4000 Hollywood Boulevard, Suite 750N
Hollywood, Florida 33021
Certificate of Authorization Number: 2771

SCALE 1"=20'-0"

CLIENTS PROJECT: –
ENGINEERS PROJECT: 44238-004
CAD REFERENCE: 44238-004BP3-G12

NORTH MIAMI FLORIDA
CITY OF NORTH MIAMI
PUBLIC WORKS UTILITIES

WINSON WATER TREATMENT PLANT
BID PACKAGE 3: WTP REHABILITATION
PROPOSED STAGING PLAN
PHASES II, III & IV

DATE: JUNE 2014
SHEET: 12 OF 335
DRAWING: G-12

PERMITTING

PLOT DATE: 6/10/2014 9:11 AM BY: HSCAD1

File = H:\44238-004\Drawings\Bid Package 3 - WTP Rehab\General\44238-004BP3-G12 Saved by HsCad2 Save date = 6/9/2014 5:43 PM

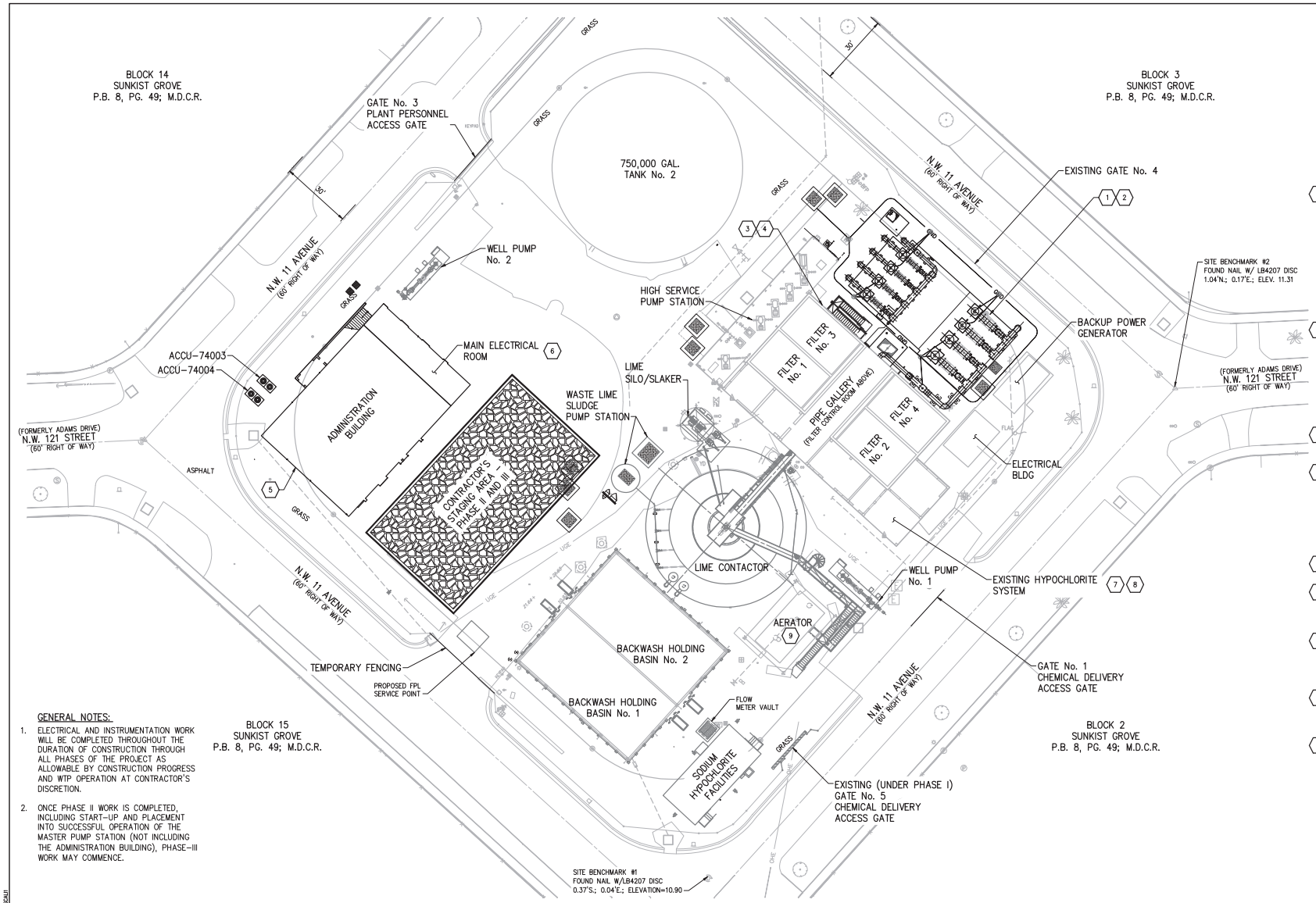

GENERAL NOTES:

1. ELECTRICAL AND INSTRUMENTATION WORK WILL BE COMPLETED THROUGHOUT THE DURATION OF CONSTRUCTION THROUGH ALL PHASES OF THE PROJECT AS ALLOWABLE BY CONSTRUCTION PROGRESS AND WTP OPERATION AT CONTRACTOR'S DISCRETION.
2. ONCE PHASE II WORK IS COMPLETED, INCLUDING START-UP AND PLACEMENT INTO SUCCESSFUL OPERATION OF THE MASTER PUMP STATION (NOT INCLUDING THE ADMINISTRATION BUILDING), PHASE-III WORK MAY COMMENCE.

KEYED NOTES:

1. MASTER PUMP STATION – TIE-IN OF THE MASTER PUMP STATION TO THE EXISTING FILTER CLEARWELL WILL REQUIRE A PLANNED SHUTDOWN OF THE FILTERS AND THE WTP FOR 9 CALENDAR DAYS. AS DESCRIBED IN SPECIFICATION SECTION ENTITLED "SUMMARY OF WORK", IF THE CONTRACTOR FAILS TO COMPLETE THE REQUISITE WORK DURING THE NOTED 9 CALENDAR DAY PERIOD, IT SHALL BE RESPONSIBLE FOR PAYMENT OF CITY WATER PURCHASES FOR THE DURATION AFTER THE INITIAL 9 CALENDAR DAY PERIOD UNTIL THE WORK IS COMPLETED.
2. THE CLEARWELL WILL HAVE APPROXIMATELY 5 FEET OF WATER IN IT UPON REMOVAL FROM SERVICE. SUPPLY ALL TEMPORARY PUMPS, PIPING, POWER, CONTROLS, MATERIALES, LABOR AND EQUIPMENT NEEDED TO REMOVE AND PROPERLY DISPOSE OF THE WATER FROM THE CLEARWELL. WATER WILL BE PURCHASED BY THE CITY FROM MD-WASD DURING THE PLANNED WTP SHUTDOWN.
3. AN INSPECTION OF THE CLEARWELL WILL BE PERFORMED DURING THE PLANNED WTP SHUTDOWN.
4. CONTRACTOR TO REMOVE AND DISPOSED THE LAYER OF PRECIPITATE REPORTED TO EXIST UNIFORMLY THROUGHOUT THE CLEARWELL (BY UNDERWATER SOLUTIONS, INC. REPORT OF MARCH 2005) DURING THE PLANNED WTP SHUTDOWN. REFER TO THE SPECIFICATION TITLED "REMOVAL OF EXISTING PRECIPITATE IN FILTER CLEARWELL".
5. ADMINISTRATION BUILDING CONSTRUCTION CONTINUES.
6. MAIN ELECTRICAL ROOM CONSTRUCTION IS FINALIZED AND TEMPORARY CERTIFICATE OF OCCUPANCY (TCO) PROCURED BY CONTRACTOR.
7. THE CONTRACTOR SHALL REMOVE EXISTING HYPOCHLORITE SYSTEM COMPONENTS AS NOTED ON THE DRAWINGS. THIS WILL MAKE SPACE AVAILABLE FOR THE INTERIM CHEMICAL FEED SYSTEMS
8. THE CONTRACTOR SHALL FURNISH, INSTALL AND STARTUP INTERIM CHEMICAL FEED SYSTEMS AS SPECIFIED IN DIVISION 13 AND SHOWN ON THE DRAWINGS.
9. REHABILITATE THE AERATOR STRUCTURE AND INSTALL MIST PANELS PER THE REQUIREMENTS OF DISCIPLINE DRAWINGS AND THE SPECIFICATIONS.

LEGEND:

- PROPOSED WORK PHASE-II
- WORK COMPLETED IN PHASE-I
- EXISTING
- STAGING AREA

1"=20'-0" 20 10 0 20'

NO.	DATE	ISSUED FOR	BY

DESIGNED G.A.B.
DRAWN G.P.B.
CHECKED J.N.M.
PROJ. ENGR. G.A.B.

H. J. VIDAL P.E.
No. 37882

HAZEN AND SAWYER
Environmental Engineers & Scientists
4000 Hollywood Boulevard, Suite 750N
Hollywood, Florida 33021
Certificate of Authorization Number: 2771

SCALE 1"=20'-0"

CLIENTS PROJECT: –
ENGINEERS PROJECT: 44238-004
CAD REFERENCE: 44238-004BP3-G13

NORTH MIAMI FLORIDA
CITY OF NORTH MIAMI
PUBLIC WORKS UTILITIES

WINSON WATER TREATMENT PLANT
BID PACKAGE 3: WTP REHABILITATION
PROPOSED STAGING PLAN DEMOLITION AND CONSTRUCTION PLAN – PHASE II

DATE: JUNE 2014
SHEET: 13 OF 335
DRAWING: G-13

PERMITTING

PLOT DATE: 6/10/2014 8:03 AM BY: HSCALIT

File = H:\44238-004\Drawings\Bid Package 3 – WTP Rehab\General\44238-004BP3-G13 Saved by HScalit Save date = 6/9/2014 8:22 PM

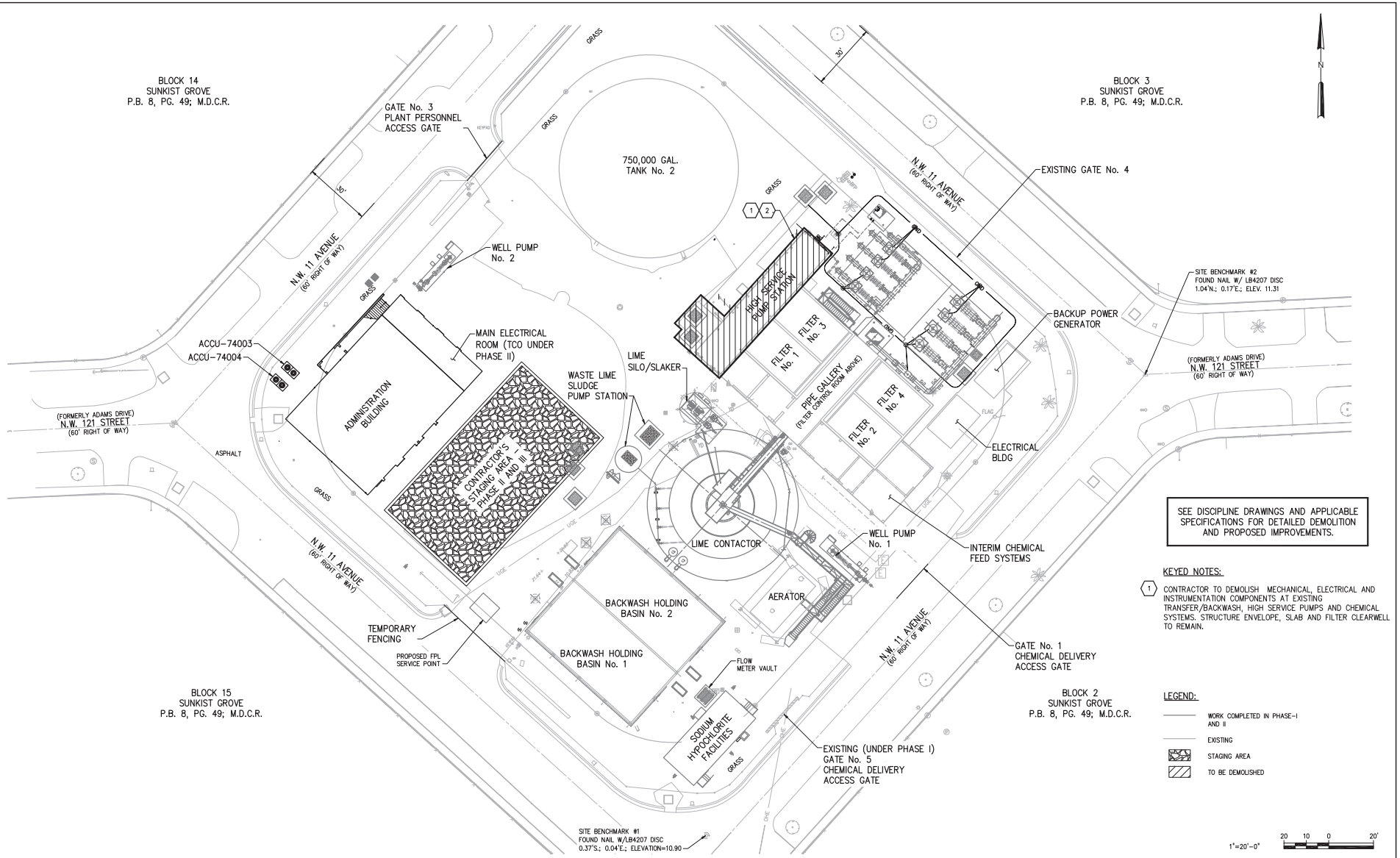

SEE DISCIPLINE DRAWINGS AND APPLICABLE SPECIFICATIONS FOR DETAILED DEMOLITION AND PROPOSED IMPROVEMENTS.

KEYED NOTES:

1. CONTRACTOR TO DEMOLISH MECHANICAL, ELECTRICAL AND INSTRUMENTATION COMPONENTS AT EXISTING TRANSFER/BACKWASH, HIGH SERVICE PUMPS AND CHEMICAL SYSTEMS. STRUCTURE ENVELOPE, SLAB AND FILTER CLEARWELL TO REMAIN.

LEGEND:

- WORK COMPLETED IN PHASE-I AND II
- EXISTING
- STAGING AREA
- TO BE DEMOLISHED

NO.	DATE	ISSUED FOR	BY

DESIGNED G.A.B.
DRAWN G.P.B.
CHECKED J.N.M.
PROJ. ENGR. G.A.B.

H. J. VIDAL P.E.
No. 37882

HAZEN AND SAWYER
Environmental Engineers & Scientists
4000 Hollywood Boulevard, Suite 750N
Hollywood, Florida 33021
Certificate of Authorization Number: 2771

SCALE 1"=20'-0"

CLIENTS PROJECT: –
ENGINEERS PROJECT: 44238-004
CAD REFERENCE: 44238-004BP3-G14

CITY OF NORTH MIAMI
PUBLIC WORKS UTILITIES

WINSON WATER TREATMENT PLANT
BID PACKAGE 3: WTP REHABILITATION

PROPOSED STAGING PLAN
DEMOLITION PLAN – PHASE III

DATE: JUNE 2014
SHEET: 14 OF 335
DRAWING: G-14

PERMITTING

File = H:\44238-004\Drawings\Bid Package 3 – WTP Rehab\General\44238-004BP3-G14 Saved by HsCad2 Save date = 6/9/2014 7:33 PM

PLOT DATE: 6/10/2014 9:16 AM BY: HSCALII

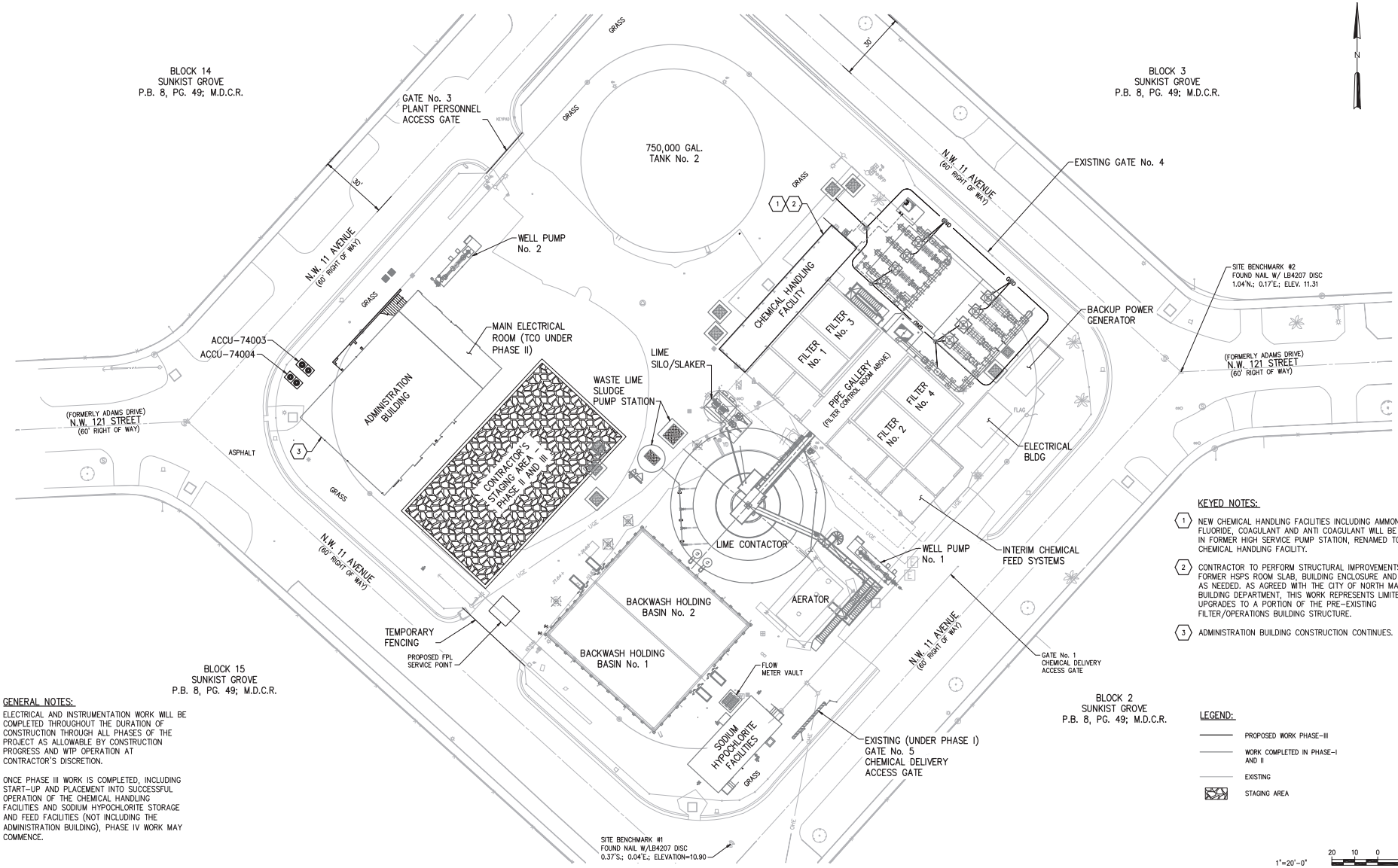

KEYED NOTES:

1. NEW CHEMICAL HANDLING FACILITIES INCLUDING AMMONIA, FLUORIDE, COAGULANT AND ANTI COAGULANT WILL BE LOCATED IN FORMER HIGH SERVICE PUMP STATION, RENAMED TO CHEMICAL HANDLING FACILITY.
2. CONTRACTOR TO PERFORM STRUCTURAL IMPROVEMENTS TO FORMER HSPS ROOM SLAB, BUILDING ENCLOSURE AND HVAC, AS NEEDED. AS AGREED WITH THE CITY OF NORTH MAIMI BUILDING DEPARTMENT, THIS WORK REPRESENTS LIMITED UPGRADES TO A PORTION OF THE PRE-EXISTING FILTER/OPERATIONS BUILDING STRUCTURE.
3. ADMINISTRATION BUILDING CONSTRUCTION CONTINUES.

GENERAL NOTES:

1. ELECTRICAL AND INSTRUMENTATION WORK WILL BE COMPLETED THROUGHOUT THE DURATION OF CONSTRUCTION THROUGH ALL PHASES OF THE PROJECT AS ALLOWABLE BY CONSTRUCTION PROGRESS AND WTP OPERATION AT CONTRACTOR'S DISCRETION.
2. ONCE PHASE III WORK IS COMPLETED, INCLUDING START-UP AND PLACEMENT INTO SUCCESSFUL OPERATION OF THE CHEMICAL HANDLING FACILITIES AND SODIUM HYPOCHLORITE STORAGE AND FEED FACILITIES (NOT INCLUDING THE ADMINISTRATION BUILDING), PHASE IV WORK MAY COMMENCE.

LEGEND:

- PROPOSED WORK PHASE-III
- WORK COMPLETED IN PHASE-I AND II
- EXISTING
- STAGING AREA

PLOT DATE: 6/10/2014 8:19 AM BY: HSCALIT

NO.	DATE	ISSUED FOR	BY

DESIGNED G.A.B.
DRAWN G.P.B.
CHECKED J.N.M.
PROJ. ENGR. G.A.B.

H. J. VIDAL P.E.
No. 37882

HAZEN AND SAWYER
Environmental Engineers & Scientists
4000 Hollywood Boulevard, Suite 750N
Hollywood, Florida 33021
Certificate of Authorization Number: 2771

SCALE 1"=20'-0"

CLIENTS PROJECT: –
ENGINEERS PROJECT: 44238-004
CAD REFERENCE: 44238-004BP3-G15

NORTH MIAMI FLORIDA
CITY OF NORTH MIAMI
PUBLIC WORKS UTILITIES

WINSON WATER TREATMENT PLANT
BID PACKAGE 3: WTP REHABILITATION
PROPOSED STAGING PLAN
CONSTRUCTION PLAN – PHASE III

DATE: JUNE 2014
SHEET: 15 OF 335
DRAWING: G-15

PERMITTING

File = H:\44238-004\Drawings\Bid Package 3 - WTP Rehab\General\44238-004BP3-G15 Saved by HScalit Save date = 6/9/2014 8:23 PM

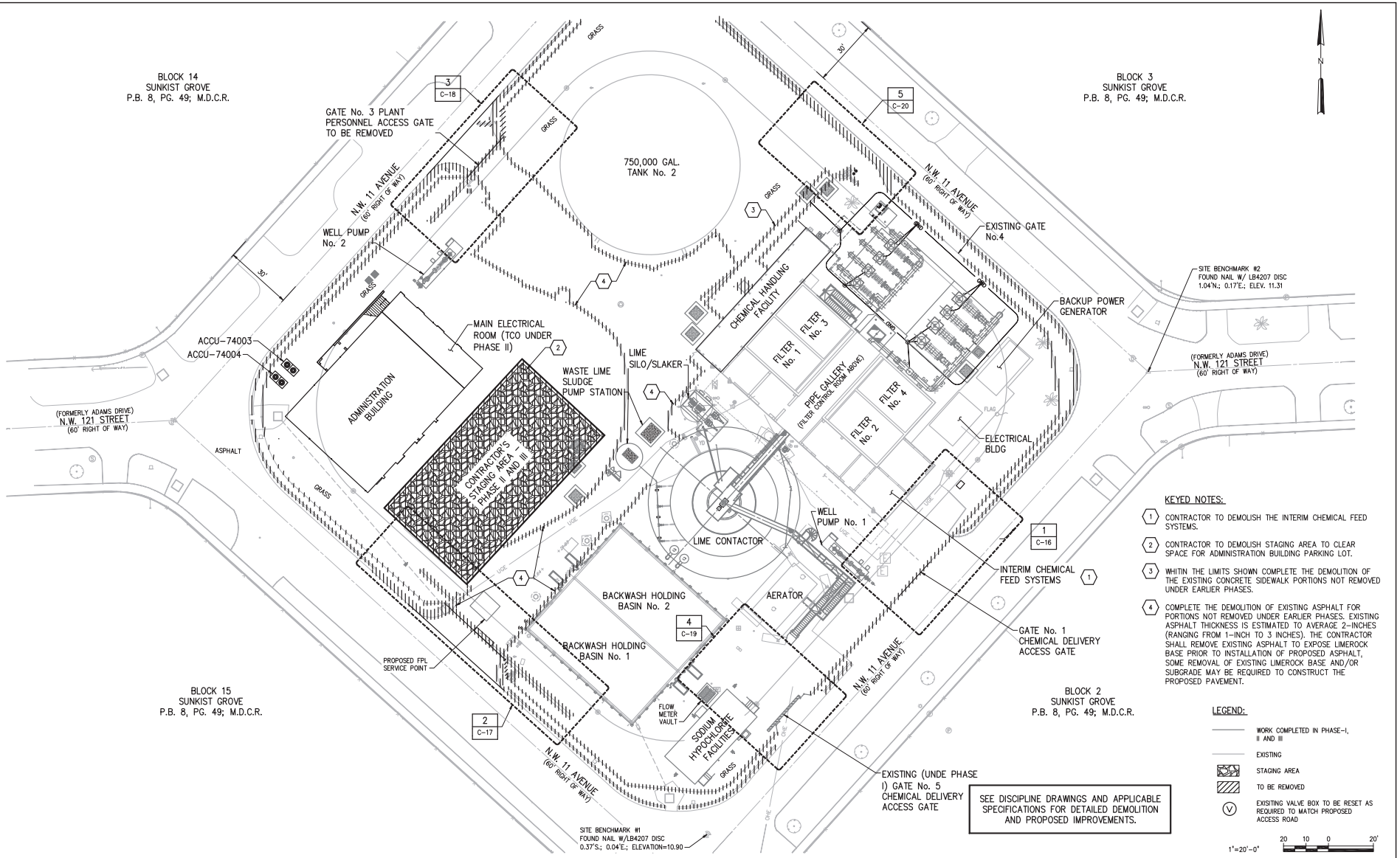

KEYED NOTES:

1. CONTRACTOR TO DEMOLISH THE INTERIM CHEMICAL FEED SYSTEMS.
2. CONTRACTOR TO DEMOLISH STAGING AREA TO CLEAR SPACE FOR ADMINISTRATION BUILDING PARKING LOT.
3. WHITIN THE LIMITS SHOWN COMPLETE THE DEMOLITION OF THE EXISTING CONCRETE SIDEWALK PORTIONS NOT REMOVED UNDER EARLIER PHASES.
4. COMPLETE THE DEMOLITION OF EXISTING ASPHALT FOR PORTIONS NOT REMOVED UNDER EARLIER PHASES. EXISTING ASPHALT THICKNESS IS ESTIMATED TO AVERAGE 2-INCHES (RANGING FROM 1-INCH TO 3 INCHES). THE CONTRACTOR SHALL REMOVE EXISTING ASPHALT TO EXPOSE LIMEROCK BASE PRIOR TO INSTALLATION OF PROPOSED ASPHALT, SOME REMOVAL OF EXISTING LIMEROCK BASE AND/OR SUBGRADE MAY BE REQUIRED TO CONSTRUCT THE PROPOSED PAVEMENT.

LEGEND:

- WORK COMPLETED IN PHASE-I, II AND III
- EXISTING
- STAGING AREA
- TO BE REMOVED
- (V) EXISITING VALVE BOX TO BE RESET AS REQUIRED TO MATCH PROPOSED ACCESS ROAD

1"=20'-0" 20 10 0 20'

SEE DISCIPLINE DRAWINGS AND APPLICABLE SPECIFICATIONS FOR DETAILED DEMOLITION AND PROPOSED IMPROVEMENTS.

NO.	DATE	ISSUED FOR	BY

DESIGNED G.A.B.
DRAWN G.P.B.
CHECKED J.N.M.
PROJ. ENGR. G.A.B.

H. J. VIDAL P.E.
No. 37882

HAZEN AND SAWYER
Environmental Engineers & Scientists
4000 Hollywood Boulevard, Suite 750N
Hollywood, Florida 33021
Certificate of Authorization Number: 2771

SCALE 1"=20'-0"

CLIENTS PROJECT: –
ENGINEERS PROJECT: 44238-004
CAD REFERENCE: 44238-004BP3-G16

NORTH MIAMI FLORIDA
CITY OF NORTH MIAMI
PUBLIC WORKS UTILITIES

WINSON WATER TREATMENT PLANT
BID PACKAGE 3: WTP REHABILITATION
PROPOSED STAGING PLAN
DEMOLITION PLAN – PHASE IV

DATE: JUNE 2014
SHEET: 16 OF 335
DRAWING: G-16

PERMITTING

PLOT DATE: 6/10/2014 9:12 AM BY: HSCAIT

File = H:\44238-004\Drawings\Bid Package 3 - WTP Rehab\General\44238-004BP3-G16 Saved by HScaiff Save date = 6/9/2014 9:09 PM

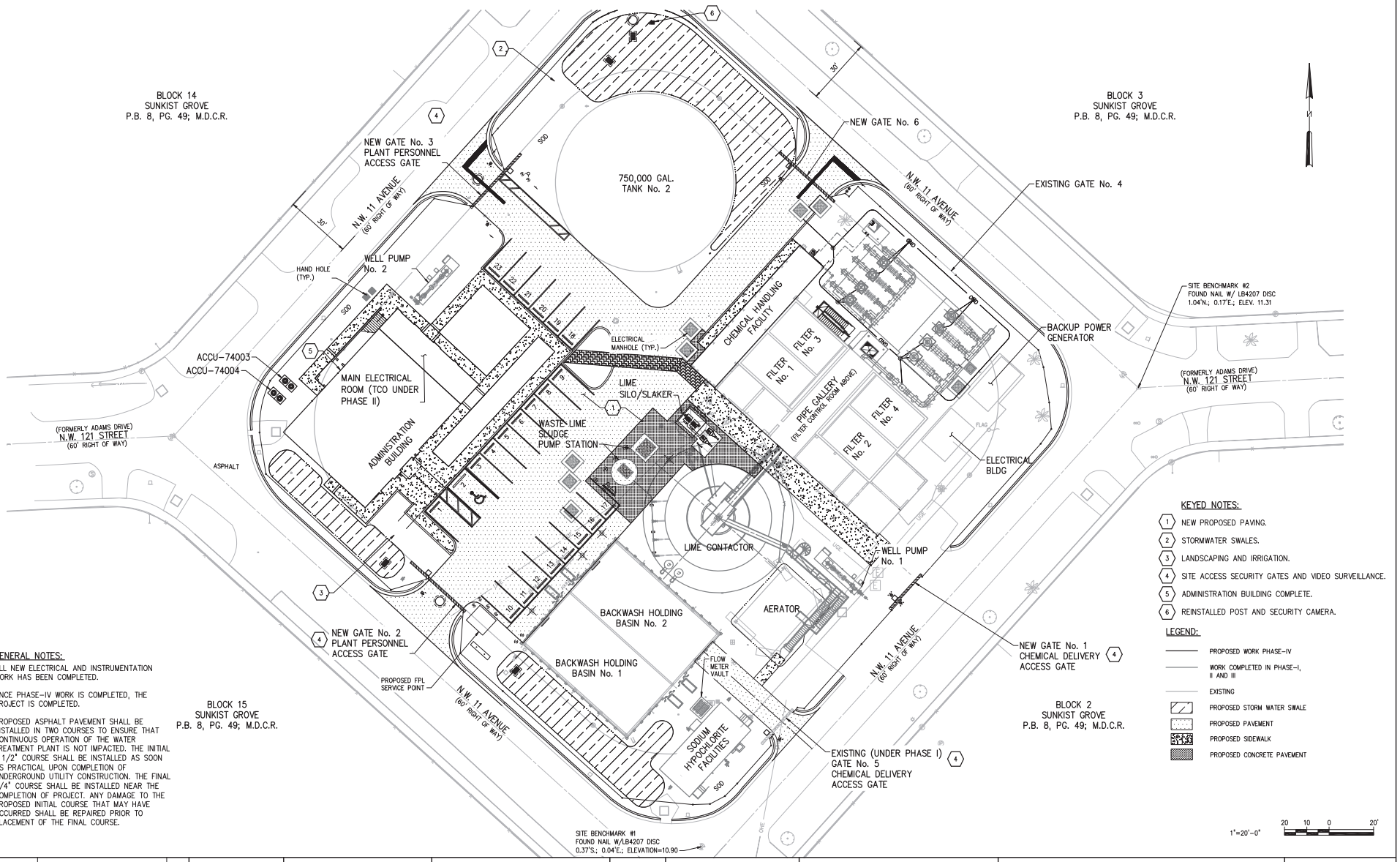

KEYED NOTES:

1. NEW PROPOSED PAVING.
2. STORMWATER SWALES.
3. LANDSCAPING AND IRRIGATION.
4. SITE ACCESS SECURITY GATES AND VIDEO SURVEILLANCE.
5. ADMINISTRATION BUILDING COMPLETE.
6. REINSTALLED POST AND SECURITY CAMERA.

LEGEND:

- PROPOSED WORK PHASE-IV
- WORK COMPLETED IN PHASE-I, II AND III
- EXISTING
- PROPOSED STORM WATER SWALE
- PROPOSED PAVEMENT
- PROPOSED SIDEWALK
- PROPOSED CONCRETE PAVEMENT

GENERAL NOTES:

1. ALL NEW ELECTRICAL AND INSTRUMENTATION WORK HAS BEEN COMPLETED.
2. ONCE PHASE-IV WORK IS COMPLETED, THE PROJECT IS COMPLETED.
3. PROPOSED ASPHALT PAVEMENT SHALL BE INSTALLED IN TWO COURSES TO ENSURE THAT CONTINUOUS OPERATION OF THE WATER TREATMENT PLANT IS NOT IMPACTED. THE INITIAL 1 1/2" COURSE SHALL BE INSTALLED AS SOON AS PRACTICAL UPON COMPLETION OF UNDERGROUND UTILITY CONSTRUCTION. THE FINAL 3/4" COURSE SHALL BE INSTALLED NEAR THE COMPLETION OF PROJECT. ANY DAMAGE TO THE PROPOSED INITIAL COURSE THAT MAY HAVE OCCURRED SHALL BE REPAIRED PRIOR TO PLACEMENT OF THE FINAL COURSE.

PLOT DATE: 6/10/2014 9:19 AM BY: HSCAJI

NO.	DATE	ISSUED FOR	BY

DESIGNED G.A.B.
DRAWN G.P.B.
CHECKED J.N.M.
PROJ. ENGR. G.A.B.

H. J. VIDAL P.E.
No. 37882

HAZEN AND SAWYER
Environmental Engineers & Scientists
4000 Hollywood Boulevard, Suite 750N
Hollywood, Florida 33021
Certificate of Authorization Number: 2771

SCALE 1"=20'-0"

CLIENTS PROJECT: –
ENGINEERS PROJECT: 44238-004
CAD REFERENCE: 44238-004BP3-G17

NORTH MIAMI FLORIDA
CITY OF NORTH MIAMI
PUBLIC WORKS UTILITIES

WINSON WATER TREATMENT PLANT
BID PACKAGE 3: WTP REHABILITATION
PROPOSED STAGING PLAN
CONSTRUCTION PLAN – PHASE IV

DATE: JUNE 2014
SHEET: 17 OF 335
DRAWING: G-17

PERMITTING

File = H:\44238-004\Drawings\Bid Package 3 - WTP Rehab\General\44238-004BP3-G17 Saved by HsCal2 Save date = 6/9/2014 6:45 PM

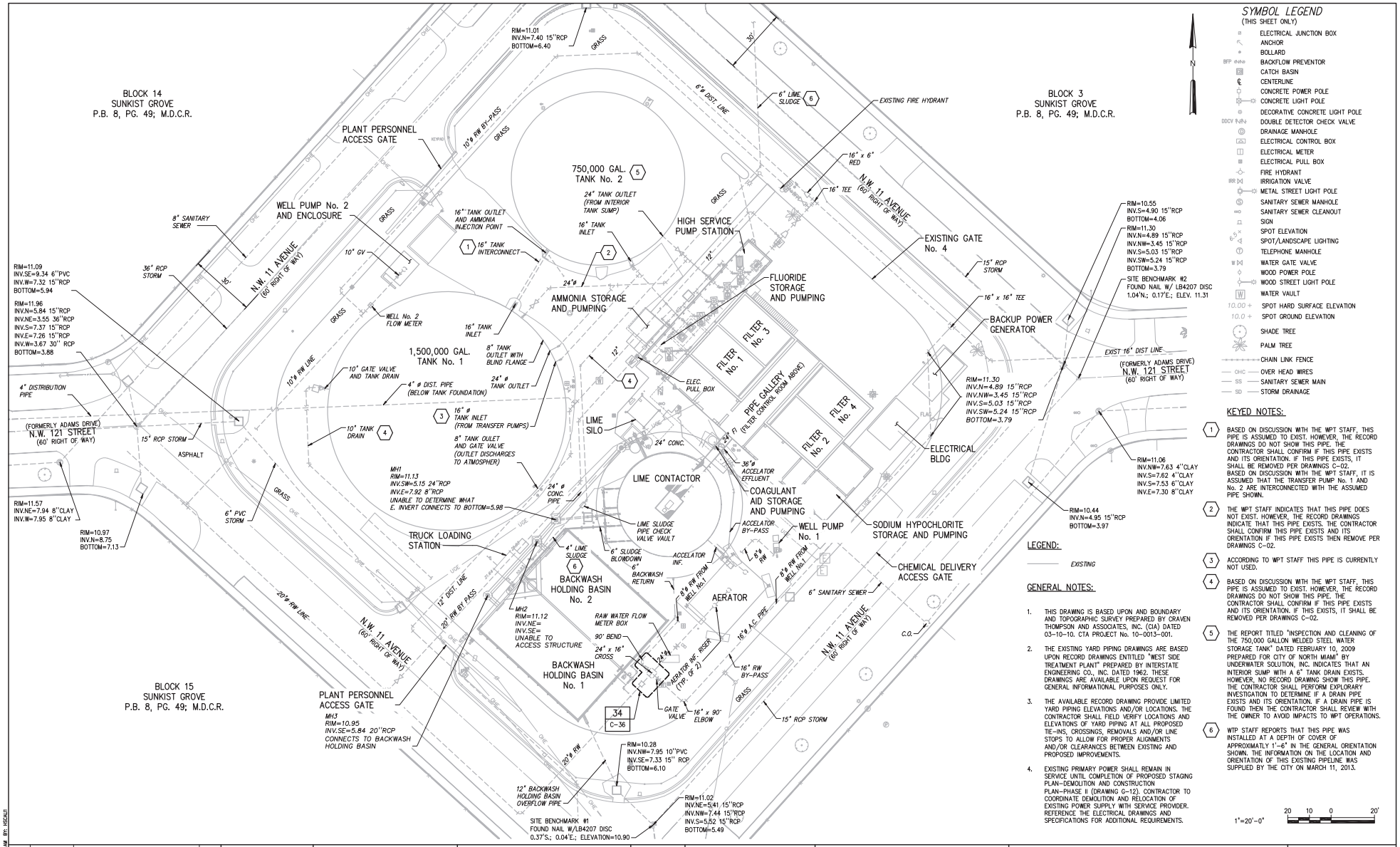

SYMBOL LEGEND
(THIS SHEET ONLY)

- ELECTRICAL JUNCTION BOX
- ANCHOR
- BOLLARD
- BFP — BACKFLOW PREVENTOR
- CATCH BASIN
- CENTERLINE
- CONCRETE POWER POLE
- CONCRETE LIGHT POLE
- DECORATIVE CONCRETE LIGHT POLE
- DDCV — DOUBLE DETECTOR CHECK VALVE
- DRAINAGE MANHOLE
- ELECTRICAL CONTROL BOX
- ELECTRICAL METER
- ELECTRICAL PULL BOX
- FIRE HYDRANT
- IRR — IRRIGATION VALVE
- METAL STREET LIGHT POLE
- SANITARY SEWER MANHOLE
- SANITARY SEWER CLEANOUT
- SIGN
- SPOT ELEVATION
- SPOT/LANDSCAPE LIGHTING
- TELEPHONE MANHOLE
- WATER GATE VALVE
- WOOD POWER POLE
- WOOD STREET LIGHT POLE
- W — WATER VAULT
- 10.00 + — SPOT HARD SURFACE ELEVATION
- 10.0 + — SPOT GROUND ELEVATION
- SHADE TREE
- PALM TREE
- CHAIN LINK FENCE
- OHC — OVER HEAD WIRES
- SS — SANITARY SEWER MAIN
- SD — STORM DRAINAGE

KEYED NOTES:

1. BASED ON DISCUSSION WITH THE WPT STAFF, THIS PIPE IS ASSUMED TO EXIST. HOWEVER, THE RECORD DRAWINGS DO NOT SHOW THIS PIPE. THE CONTRACTOR SHALL CONFIRM IF THIS PIPE EXISTS AND ITS ORIENTATION. IF THIS PIPE EXISTS, IT SHALL BE REMOVED PER DRAWINGS C-02. BASED ON DISCUSSION WITH THE WPT STAFF, IT IS ASSUMED THAT THE TRANSFER PUMP No. 1 AND No. 2 ARE INTERCONNECTED WITH THE ASSUMED PIPE SHOWN.
2. THE WPT STAFF INDICATES THAT THIS PIPE DOES NOT EXIST. HOWEVER, THE RECORD DRAWINGS INDICATE THAT THIS PIPE EXISTS. THE CONTRACTOR SHALL CONFIRM THIS PIPE EXISTS AND ITS ORIENTATION IF THIS PIPE EXISTS THEN REMOVE PER DRAWINGS C-02.
3. ACCORDING TO WPT STAFF THIS PIPE IS CURRENTLY NOT USED.
4. BASED ON DISCUSSION WITH THE WPT STAFF, THIS PIPE IS ASSUMED TO EXIST. HOWEVER, THE RECORD DRAWINGS DO NOT SHOW THIS PIPE. THE CONTRACTOR SHALL CONFIRM IF THIS PIPE EXISTS AND ITS ORIENTATION. IF THIS EXISTS, IT SHALL BE REMOVED PER DRAWINGS C-02.
5. THE REPORT TITLED "INSPECTION AND CLEANING OF THE 750,000 GALLON WELDED STEEL WATER STORAGE TANK" DATED FEBRUARY 10, 2009 PREPARED FOR CITY OF NORTH MIAMI" BY UNDERWATER SOLUTION, INC. INDICATES THAT AN INTERIOR SUMP WITH A 6" TANK DRAIN EXISTS. HOWEVER, NO RECORD DRAWING SHOW THIS PIPE. THE CONTRACTOR SHALL PERFORM EXPLORARY INVESTIGATION TO DETERMINE IF A DRAIN PIPE EXISTS AND ITS ORIENTATION. IF A DRAIN PIPE IS FOUND THEN THE CONTRACTOR SHALL REVIEW WITH THE OWNER TO AVOID IMPACTS TO WPT OPERATIONS.
6. WTP STAFF REPORTS THAT THIS PIPE WAS INSTALLED AT A DEPTH OF COVER OF APPROXIMATLY 1'-6" IN THE GENERAL ORIENTATION SHOWN. THE INFORMATION ON THE LOCATION AND ORIENTATION OF THIS EXISTING PIPELINE WAS SUPPLIED BY THE CITY ON MARCH 11, 2013.

LEGEND:

EXISTING

GENERAL NOTES:

1. THIS DRAWING IS BASED UPON AND BOUNDARY AND TOPOGRAPHIC SURVEY PREPARED BY CRAVEN THOMPSON AND ASSOCIATES, INC. (CIA) DATED 03-10-10. CTA PROJECT No. 10-0013-001.
2. THE EXISTING YARD PIPING DRAWINGS ARE BASED UPON RECORD DRAWINGS ENTITLED "WEST SIDE TREATMENT PLANT" PREPARED BY INTERSTATE ENGINEERING CO., INC. DATED 1962. THESE DRAWINGS ARE AVAILABLE UPON REQUEST FOR GENERAL INFORMATIONAL PURPOSES ONLY.
3. THE AVAILABLE RECORD DRAWING PROVIDE LIMITED YARD PIPING ELEVATIONS AND/OR LOCATIONS. THE CONTRACTOR SHALL FIELD VERIFY LOCATIONS AND ELEVATIONS OF YARD PIPING AT ALL PROPOSED TIE-INS, CROSSINGS, REMOVALS AND/OR LINE STOPS TO ALLOW FOR PROPER ALIGNMENTS AND/OR CLEARANCES BETWEEN EXISTING AND PROPOSED IMPROVEMENTS.
4. EXISTING PRIMARY POWER SHALL REMAIN IN SERVICE UNTIL COMPLETION OF PROPOSED STAGING PLAN-DEMOLITION AND CONSTRUCTION PLAN-PHASE II (DRAWING C-12). CONTRACTOR TO COORDINATE DEMOLITION AND RELOCATION OF EXISTING POWER SUPPLY WITH SERVICE PROVIDER. REFERENCE THE ELECTRICAL DRAWINGS AND SPECIFICATIONS FOR ADDITIONAL REQUIREMENTS.

1"=20'-0"

20 10 0 20'

NO.	DATE	ISSUED FOR	BY

DESIGNED G.A.B.
DRAWN G.P.B.
CHECKED G.N.C.
PROJ. ENGR. G.A.B.

H. J. VIDAL P.E.
No. 37882

HAZEN AND SAWYER
Environmental Engineers & Scientists
4000 Hollywood Boulevard, Suite 750N
Hollywood, Florida 33021
Certificate of Authorization Number: 2771

SCALE 1"=20'-0"

CLIENTS PROJECT: –
ENGINEERS PROJECT: 44238-004
CAD REFERENCE: 44238-004BP3-C01

NORTH MIAMI FLORIDA
CITY OF NORTH MIAMI
PUBLIC WORKS UTILITIES

WINSON WATER TREATMENT PLANT
BID PACKAGE 3: WTP REHABILITATION

YARD PIPING – EXISTING PLAN

DATE: JUNE 2014
SHEET: 18 OF 335
DRAWING: C-01

PERMITTING

PLOT DATE: 6/10/2014 10:49 AM BY: HSCALI

XREFs= ..\Base-BP3\C-Site-Survey-X,..\Base-BP3\C-BP3-SiteUtility,..\Tblock\44238-004-BP3-TB,..\Base-BP3\C-Site-Pipe-X,..\Base-CTA\C-BP3-Landscape-X

File = H:\44238-004\Drawings\Bid Package 3 - WTP Rehab\CWI\44238-004BP3-C01 Saved by HsCali2 Save date = 6/9/2014 8:16 PM

EXISTING IRRIGATION SYSTEM NOTES:

1. WTP STAFF INDICATED THAT PORTIONS OF A NON-FUNCTIONAL IRRIGATION SYSTEM MAY EXIST IN GREEN AREAS THROUGHOUT THE SITE.
2. AVAILABLE RECORD DRAWINGS OF THE EXISTING IRRIGATION SYSTEM ARE LIMITED TO SHEET No. 28 ENTITLED "SPRINKLERS SYSTEM". SEE GENERAL NOTE 1 ON DRAWING G-05.
3. IT IS INTENDED THAT ANY EXISTING IRRIGATION SYSTEM COMPONENTS BE DEMOLISHED AND REMOVED FROM THE PROJECT SITE
4. THE CONTRACTOR SHALL COORDINATE WITH WTP STAFF TO IDENTIFY POINTS OF CONNECTION BETWEEN ANY EXISTING IRRIGATION SYSTEM AND THE POTABLE WATER SYSTEM SO THAT IT CAN BE PROPERLY ISOLATED PRIOR TO DEMOLITION.
5. THE CONTRACTOR SHALL INCLUDE IN ITS BID ALL LABOR, MATERIALS AND EQUIPMENT FOR THE ISOLATION AND REMOVAL OF ANY EXISTING IRRIGATION SYSTEM COMPONENTS IN ITS BASE BID.

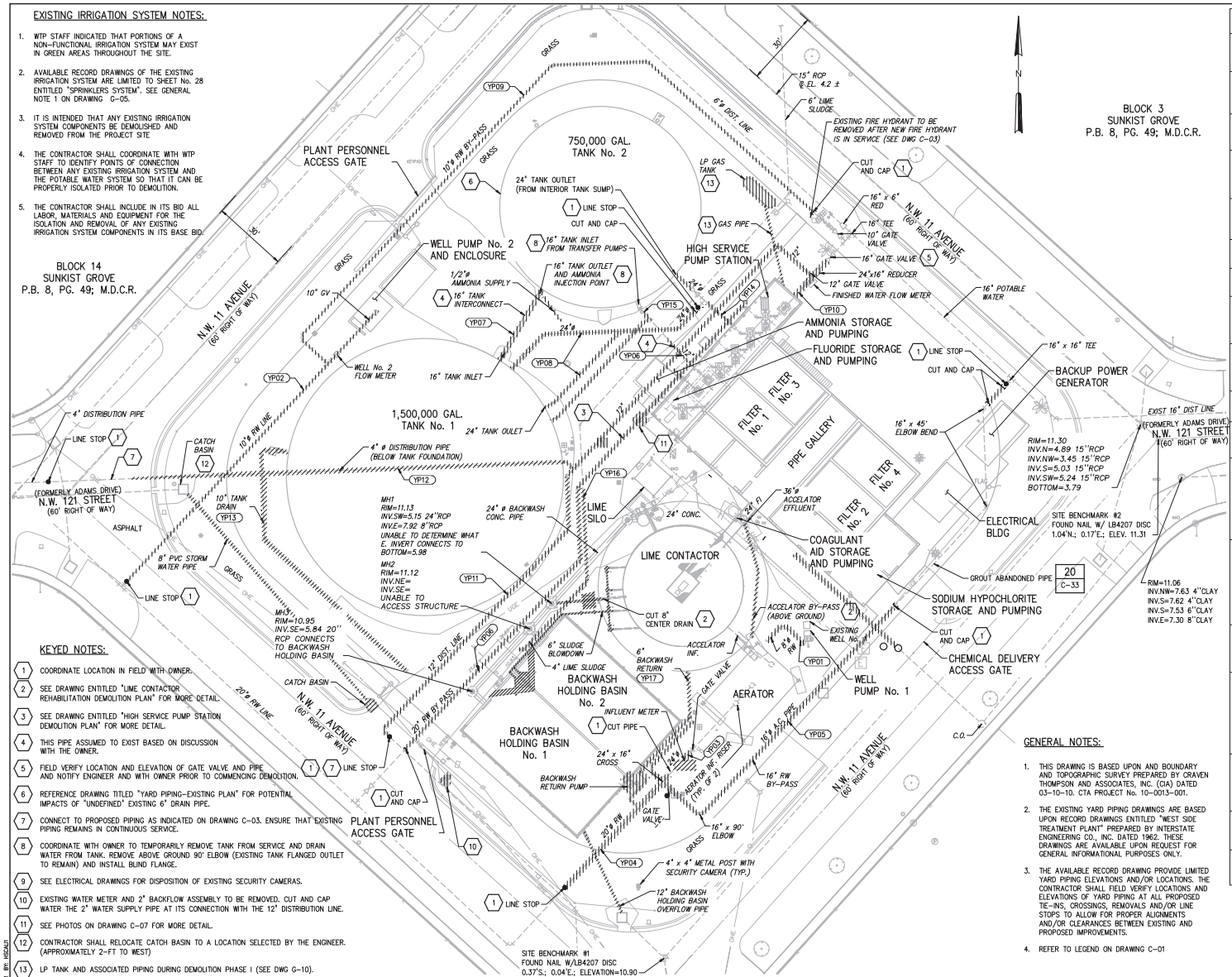

KEYED NOTES:

1. COORDINATE LOCATION IN FIELD WITH OWNER.
2. SEE DRAWING ENTITLED "LIME CONTACTOR REHABILITATION DEMOLITION PLAN" FOR MORE DETAIL.
3. SEE DRAWING ENTITLED "HIGH SERVICE PUMP STATION DEMOLITION PLAN" FOR MORE DETAIL.
4. THIS PIPE ASSUMED TO EXIST BASED ON DISCUSSION WITH THE OWNER.
5. FIELD VERIFY LOCATION AND ELEVATION OF GATE VALVE AND PIPE AND NOTIFY ENGINEER AND WITH OWNER PRIOR TO COMMENCING DEMOLITION.
6. REFERENCE DRAWING TITLED "YARD PIPING-EXISTING PLAN" FOR POTENTIAL IMPACTS OF "UNDEFINED" EXISTING 6" DRAIN PIPE.
7. CONNECT TO PROPOSED PIPING AS INDICATED ON DRAWING C-03. ENSURE THAT EXISTING PIPING REMAINS IN CONTINUOUS SERVICE.
8. COORDINATE WITH OWNER TO TEMPORARILY REMOVE TANK FROM SERVICE AND DRAIN WATER FROM TANK. REMOVE ABOVE GROUND 90° ELBOW (EXISTING TANK FLANGED OUTLET TO REMAIN) AND INSTALL BLIND FLANGE.
9. SEE ELECTRICAL DRAWINGS FOR DISPOSITION OF EXISTING SECURITY CAMERAS.
10. EXISTING WATER METER AND 2" BACKFLOW ASSEMBLY TO BE REMOVED. CUT AND CAP WATER THE 2" WATER SUPPLY PIPE AT ITS CONNECTION WITH THE 12" DISTRIBUTION LINE.
11. SEE PHOTOS ON DRAWING C-07 FOR MORE DETAIL.
12. CONTRACTOR SHALL RELOCATE CATCH BASIN TO A LOCATION SELECTED BY THE ENGINEER. (APPROXIMATELY 2-FT TO WEST)
13. LP TANK AND ASSOCIATED PIPING DURING DEMOLITION PHASE I (SEE DWG G-10).

GENERAL NOTES:

1. THIS DRAWING IS BASED UPON AND BOUNDARY AND TOPOGRAPHIC SURVEY PREPARED BY CRAVEN THOMPSON AND ASSOCIATES, INC. (CIA) DATED 03-10-10. CTA PROJECT No. 10-0013-001.
2. THE EXISTING YARD PIPING DRAWINGS ARE BASED UPON RECORD DRAWINGS ENTITLED "WEST SIDE TREATMENT PLANT" PREPARED BY INTERSTATE ENGINEERING CO., INC. DATED 1962. THESE DRAWINGS ARE AVAILABLE UPON REQUEST FOR GENERAL INFORMATIONAL PURPOSES ONLY.
3. THE AVAILABLE RECORD DRAWING PROVIDE LIMITED YARD PIPING ELEVATIONS AND/OR LOCATIONS. THE CONTRACTOR SHALL FIELD VERIFY LOCATIONS AND ELEVATIONS OF YARD PIPING AT ALL PROPOSED TIE-INS, CROSSINGS, REMOVALS AND/OR LINE STOPS TO ALLOW FOR PROPER ALIGNMENTS AND/OR CLEARANCES BETWEEN EXISTING AND PROPOSED IMPROVEMENTS.
4. REFER TO LEGEND ON DRAWING C-01

YARD PIPING SCHEDULE

YARD PIPING NO. (YPXX)	DESCRIPTION	PROPOSED PIPE SIZE (INCHES)	SEQUENCE REQUIREMENTS
YP01	ON-SITE PRODUCTION WELL NO. 1 TO INFLUENT METER	10	DEMOLISH EXISTING 6-INCH AND REPLACE WITH PROPOSED 10-INCH MAIN DURING FILTER CLEARWELL SHUTDOWN (9 DAYS) DURING PROPOSED STAGING PLAN- DEMOLITION AND CONSTRUCTION PLAN – PHASE II (SHEET G-12).
YP02	ON-SITE PRODUCTION WELL NO. 2 DISCHARGE PIPE	10	DEMOLISH EXISTING 10-INCH AND REPLACE WITH PROPOSED 10-INCH MAIN. REQUIRES ISOLATION VIA INSTALLATION OF A LINE STOP AT WTP BOUNDARY.
YP03	AERATOR FEED LINE – UP TO GATE VALVE AFTER FLOW METER	24	DEMOLISH EXISTING 24-INCH AND METER UP TO EXISTING GATE VALVE AND REPLACE WITH NEW DURING FILTER CLEARWELL SHUTDOWN (9 DAYS) DURING PROPOSED STAGING PLAN – DEMOLITION AND CONSTRUCTION PLAN – PHASE II (SHEET G-12).
YP04	COMBINED OFF-SITE RAW WATER FEED LINE TO AERATOR	20	DEMOLISH EXISTING 20-INCH AND REPLACE WITH PROPOSED 20-INCH MAIN DURING FILTER CLEARWELL SHUTDOWN (9 DAYS) DURING PROPOSED STAGING PLAN – DEMOLITION AND CONSTRUCTION PLAN – PHASE II (SHEET G-12).
YP05	RAW WATER BYPASS ON SE END OF WTP	16	DEMOLISH EXISTING 16-INCH AS SHOWN WITH CUT, GROUT FILL AND CAP REMAINING MAIN. REQUIRES ISOLATION VIA INSTALLATION OF A LINE STOP AT WTP BOUNDARY.
YP06	RAW WATER BYPASS IN MIDDLE OF WTP TO HSPS	20	DEMOLISH EXISTING 20-INCH DURING PROPOSED STAGING PLAN – DEMOLITION PLAN – PHASE I (SHEET G-09).
YP07	INTERCONNECT BETWEEN 0.75 MG AND 1.5 MG TANKS	16	LOCATION OF THIS LINE IS INFERRED AS IT DOES NOT APPEAR ON ANY AVAILABLE RECORD DRAWINGS BUT HAS BEEN VERBALLY VERIFIED BY CITY. THIS WORK SHALL BE IMPLEMENTED DURING PROPOSED STAGING PLAN – DEMOLITION PLAN – PHASE I (SHEET G-09).
YP08	STORAGE TANK 1.5 MG CONNECTION TO HSPS	24	PORTIONS OF THE LOCATION OF THIS LINE ARE INFERRED AS IT DOES NOT APPEAR ON ANY AVAILABLE RECORD DRAWINGS BUT HAS BEEN VERBALLY VERIFIED BY CITY. THIS WORK SHALL BE IMPLEMENTED DURING PROPOSED STAGING PLAN – DEMOLITION PLAN – PHASE I (SHEET G-09).
YP09	RAW WATER BYPASS ON SE END OF WTP	10	ISOLATE LINE AT BOTH ENDS THROUGH EXISTING GATE VALVES DURING PROPOSED STAGING PLAN – DEMOLITION PLAN – PHASE I (SHEET G-09).
YP10	EXSITING HSPS DISCHARGE TO DISTRIBUTION WATER METER	24	DEMOLISH EXISTING 24-INCH DURING PROPOSED STAGING PLAN – DEMOLITION PLAN – PHASE III (SHEET G-13).
YP11	EXSITING DISTRIBUTION LINE FROM NW 11TH AVENUE TO CONNECTION WITH TANK NO. 1	16	DEMOLISH EXISTING 12-INCH DISTRIBUTION LINE DURING PROPOSED STAGING PLAN – DEMOLITION PLAN – PHASE I (SHEET G-09). PRIOR TO THE DEMOLITION OF THE EXISTING 12" DISTRIBUTION LINE CONSTRUCT THE PROPOSED 16" POTABLE WATER PIPE FROM THE EXISTING HIGH SERVICE PUMP STATION DISCHARGE MANIFOLD TO THE CONNECTION WITH THE EXISTING TO REMAIN PORTION OF OF THE 12" DISTRIBUTION PIPE. SEE DRAWING C-03 FOR CONNECTION OF EXISTING AND PROPOSED.
YP12	EXISITNG 4"ø DISTRIBUTION PIPE	4	DEMOLISH EXISTING 4" DISTRIBUTION DURING PROPOSED STAGING PLAN–DEMOLITION PLAN PHASE 1. (SHEET G-09) PRIOR TO THE DEMOLITION OF THE EXISTING 4" PIPE PROPOSED 16-INCH POTABLE WATER PIPE FROM THE EXISTING HIGH SERVICE PUMP STATION DISCHARGE MANIFOLD TO THE CONNECTION WITH THE EXISTING TO REMAIN PORTION OF THE 4" DISTRIBUTION PIPE. SEE DRAWING C-03 FOR CONNECTION OF EXISTING 4" DISTRIBUTION PIPE TO 16" POTABLE WATER PIPE.
YP13	10" TANK DRAIN	N/A	LOCATION OF THIS PIPE IS INFERRED AS IT DOES NOT APPEAR ON ANY RECORD DRAWINGS BUT HAS BEEN VERBALLY VERIFIED BY THE CITY. THIS PIPE SHALL BE REMOVED DURING PROPOSED STAGING PLAN–DEMOLITION PLAN–PHASE I (SEE SHEET G-09)
YP14	EXISTING 24-INCH HIGH SERVICE PUMP STATION SUCTION HEADER CONNECTION WITH 750,000 GALLON TANK (PORTION OF PIPE FROM PUMP STATION HEADER TO EXISTING GATE VALVE)	24	COMPLETE THE TIE-IN (VIA HOT TAP) OF THE PROPOSED HSPS SUCTION PIPING WITH THE EXISTING 24" TANK OUTLET OF THE 750,000 GALLON TANK PRIOR TO INITIATING DEMOLITION OF YP14. DEMOLISH THE PORTION OF THE EXISTING 24-INCH PIPE FROM THE EXISTING HIGH SERVICE PUMP STATION HEADER TO THE EXISTING GATE VALVE DURING PROPOSED STAGING PLAN–DEMOLITION PLAN–PHASE III (SHEET G-13)
YP15	EXISTING 16-INCH TRANSFER PUMP DISCHARGE HEADER CONNECTION WITH 750,000 GALLON TANK	16	COMPLETE THE TIE-IN OF THE PROPOSED TRANSFER PUMPS DISCHARGE CONNECTION WITH THE 750,000 GALLON TANK PRIOR TO INITIATING DEMOLITION OF YP14. DEMOLISH THE 16-INCH PIPE FROM THE EXISTING TRANSFER PUMPS TO THE ABOVE GROUND 16" TANK INLET DURING PROPOSED STAGING PLAN–DEMOLITION PLAN– PHASE III (SHEET G-13).
YP16	4" AND 6" LIME SLUDGE	6	DEMOLISH THE PORTION OF THE EXISTING 4-INCH AND 6-INCH LIME SLUDGE PIPING AS INDICATED DURING PROPOSED STAGING PLAN–CONSTRUCTION PLAN – PHASE I (SHEET G-10).
YP17	6" BACKWASH RETURN	6	DEMOLISH THE EXISTING 6-INCH BACKWASH RETURN PIPE DURING PROPOSED STAGING PLAN–CONSTRUCTION PLAN – PHASE I (SHEET G-10).

LEGEND:

EXISTING — PROPOSED — TO BE REMOVED — YARD PIPING No. XX (SEE SCHEDULE)

1"=20'-0"

NO.	DATE	ISSUED FOR	BY
1	4/1/14	100% QA COMMENTS	H.J.V.

DESIGNED G.A.B.
DRAWN G.P.B.
CHECKED G.N.C.
PROJ. ENGR. G.A.B.

H. J. VIDAL P.E.
No. 37882

HAZEN AND SAWYER
Environmental Engineers & Scientists
4000 Hollywood Boulevard, Suite 750N
Hollywood, Florida 33021
Certificate of Authorization Number: 2771

SCALE 1"=20'-0"

CLIENTS PROJECT: –
ENGINEERS PROJECT: 44238-004
CAD REFERENCE: 44238-004BP3-C02

NORTH MIAMI FLORIDA
CITY OF NORTH MIAMI
PUBLIC WORKS UTILITIES

WINSON WATER TREATMENT PLANT
BID PACKAGE 3: WTP REHABILITATION
YARD PIPING – DEMOLITION PLAN SEQUENCING

DATE: JUNE 2014
SHEET: 19 OF 335
DRAWING: C-02

PERMITTING

PLOT DATE: 6/10/2014 10:53 AM BY: HSCALIT

XREFs= ..\Base-BP3\C-Site-Survey-X,..\Base-BP3\C-BP3-SiteUtility,..\Tblock\44238-004-BP3-TB,..\Base-BP3\C-Site-Pipe-X,..\Base-CTA\C-BP3-Landscape-X,..\Base-BP3\C-Site-YardPiping-Prop,..\Base-BP3\M-BP3-BackwashBasin-Plan,..\base-bp3\M-BP3-Hypochlorite-Plan

File = H:\44238-004\Drawings\Bid Package 3 – WTP Rehab\Civil\44238-004BP3-C02 Saved by HsCad2 Save date = 6/9/2014 8:00 PM

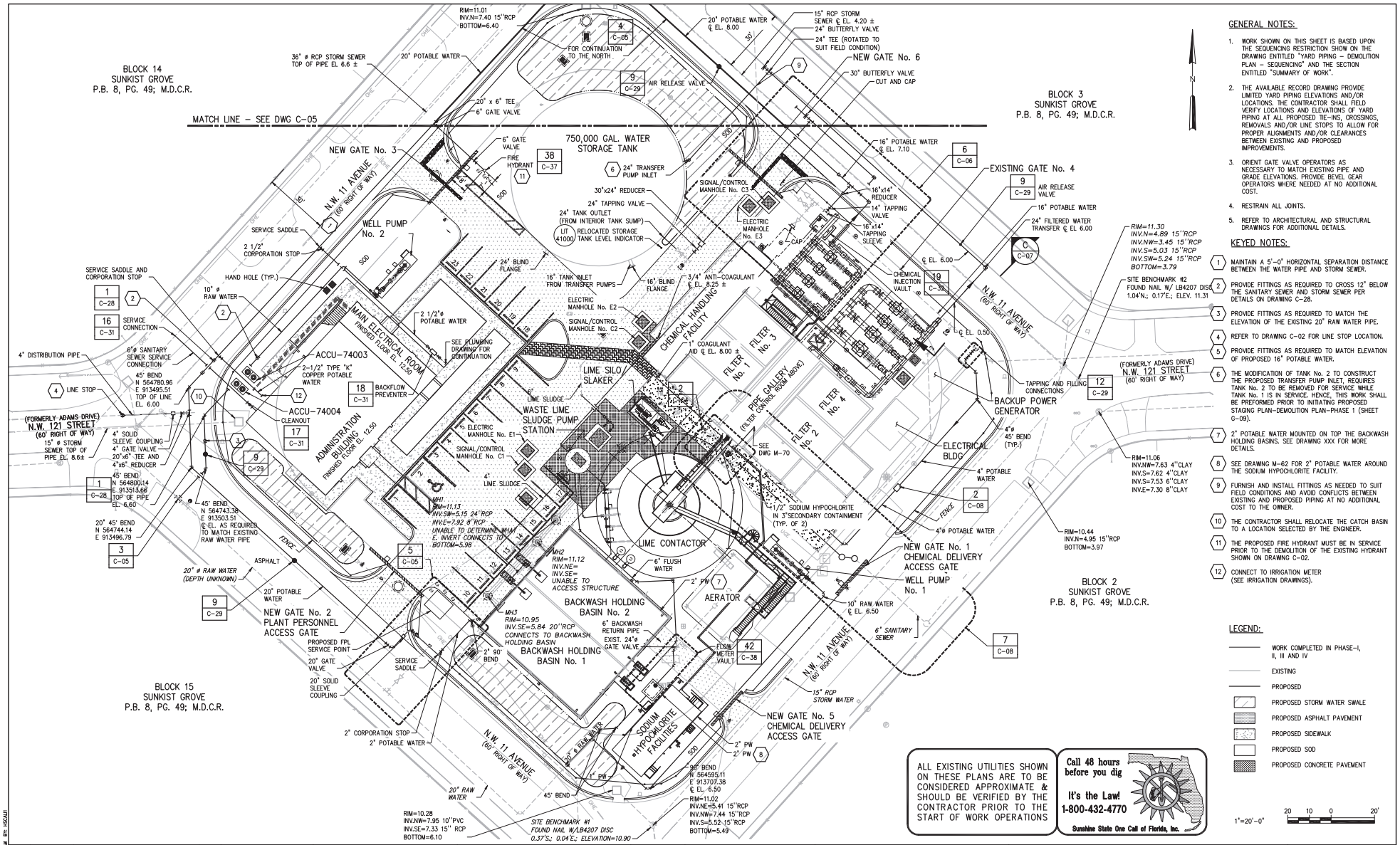

GENERAL NOTES:

1. WORK SHOWN ON THIS SHEET IS BASED UPON THE SEQUENCING RESTRICTION SHOW ON THE DRAWING ENTITLED "YARD PIPING – DEMOLITION PLAN – SEQUENCING" AND THE SECTION ENTITLED "SUMMARY OF WORK".
2. THE AVAILABLE RECORD DRAWING PROVIDE LIMITED YARD PIPING ELEVATIONS AND/OR LOCATIONS. THE CONTRACTOR SHALL FIELD VERIFY LOCATIONS AND ELEVATIONS OF YARD PIPING AT ALL PROPOSED TIE-INS, CROSSINGS, REMOVALS AND/OR LINE STOPS TO ALLOW FOR PROPER ALIGNMENTS AND/OR CLEARANCES BETWEEN EXISTING AND PROPOSED IMPROVEMENTS.
3. ORIENT GATE VALVE OPERATORS AS NECESSARY TO MATCH EXISTING PIPE AND GRADE ELEVATIONS. PROVIDE BEVEL GEAR OPERATORS WHERE NEEDED AT NO ADDITIONAL COST.
4. RESTRAIN ALL JOINTS.
5. REFER TO ARCHITECTURAL AND STRUCTURAL DRAWINGS FOR ADDITIONAL DETAILS.

KEYED NOTES:

1. MAINTAIN A 5'-0" HORIZONTAL SEPARATION DISTANCE BETWEEN THE WATER PIPE AND STORM SEWER.
2. PROVIDE FITTINGS AS REQUIRED TO CROSS 12" BELOW THE SANITARY SEWER AND STORM SEWER PER DETAILS ON DRAWING C-28.
3. PROVIDE FITTINGS AS REQUIRED TO MATCH THE ELEVATION OF THE EXISTING 20" RAW WATER PIPE.
4. REFER TO DRAWING C-02 FOR LINE STOP LOCATION.
5. PROVIDE FITTINGS AS REQUIRED TO MATCH ELEVATION OF PROPOSED 16" POTABLE WATER.
6. THE MODIFICATION OF TANK No. 2 TO CONSTRUCT THE PROPOSED TRANSFER PUMP INLET, REQUIRES TANK No. 2 TO BE REMOVED FOR SERVICE WHILE TANK No. 1 IS IN SERVICE. HENCE, THIS WORK SHALL BE PREFORMED PRIOR TO INITIATING PROPOSED STAGING PLAN-DEMOLITION PLAN-PHASE 1 (SHEET G-09).
7. 2" POTABLE WATER MOUNTED ON TOP THE BACKWASH HOLDING BASINS. SEE DRAWING XXX FOR MORE DETAILS.
8. SEE DRAWING M-62 FOR 2" POTABLE WATER AROUND THE SODIUM HYPOCHLORITE FACILITY.
9. FURNISH AND INSTALL FITTINGS AS NEEDED TO SUIT FIELD CONDITIONS AND AVOID CONFLICTS BETWEEN EXISTING AND PROPOSED PIPING AT NO ADDITIONAL COST TO THE OWNER.
10. THE CONTRACTOR SHALL RELOCATE THE CATCH BASIN TO A LOCATION SELECTED BY THE ENGINEER.
11. THE PROPOSED FIRE HYDRANT MUST BE IN SERVICE PRIOR TO THE DEMOLITION OF THE EXISTING HYDRANT SHOWN ON DRAWING C-02.
12. CONNECT TO IRRIGATION METER (SEE IRRIGATION DRAWINGS).

LEGEND:

- WORK COMPLETED IN PHASE-I, II, III AND IV
- EXISTING
- PROPOSED
- PROPOSED STORM WATER SWALE
- PROPOSED ASPHALT PAVEMENT
- PROPOSED SIDEWALK
- PROPOSED SOD
- PROPOSED CONCRETE PAVEMENT

1"=20'-0"

ALL EXISTING UTILITIES SHOWN ON THESE PLANS ARE TO BE CONSIDERED APPROXIMATE & SHOULD BE VERIFIED BY THE CONTRACTOR PRIOR TO THE START OF WORK OPERATIONS

Call 48 hours before you dig
It's the Law!
1-800-432-4770
Sunshine State One Call of Florida, Inc.

NO.	DATE	ISSUED FOR	BY
1	4/1/14	100% QA COMMENTS	H.J.V.

DESIGNED G.A.B.
DRAWN L.M.S.
CHECKED J.N.M.
PROJ. ENGR. G.A.B.

H. J. VIDAL P.E.
No. 37882

HAZEN AND SAWYER
Environmental Engineers & Scientists
4000 Hollywood Boulevard, Suite 750N
Hollywood, Florida 33021
Certificate of Authorization Number: 2771

SCALE 1"=20'-0"

CLIENTS PROJECT: –
ENGINEERS PROJECT: 44238-004
CAD REFERENCE: 44238-004BP3-C03

NORTH MIAMI FLORIDA
CITY OF NORTH MIAMI
PUBLIC WORKS UTILITIES

WINSON WATER TREATMENT PLANT
BID PACKAGE 3: WTP REHABILITATION
YARD PIPING – PROPOSED PLAN

DATE: JUNE 2014
SHEET: 20 OF 335
DRAWING: C-03

PERMITTING

PLOT DATE: 6/10/2014 11:00 AM BY: HSCAIT

File = H:\44238-004\Drawings\Bid Package 3 – WTP Rehab\Civil\44238-004BP3-C03 Saved by HScaIt Save date = 6/9/2014 7:02 PM

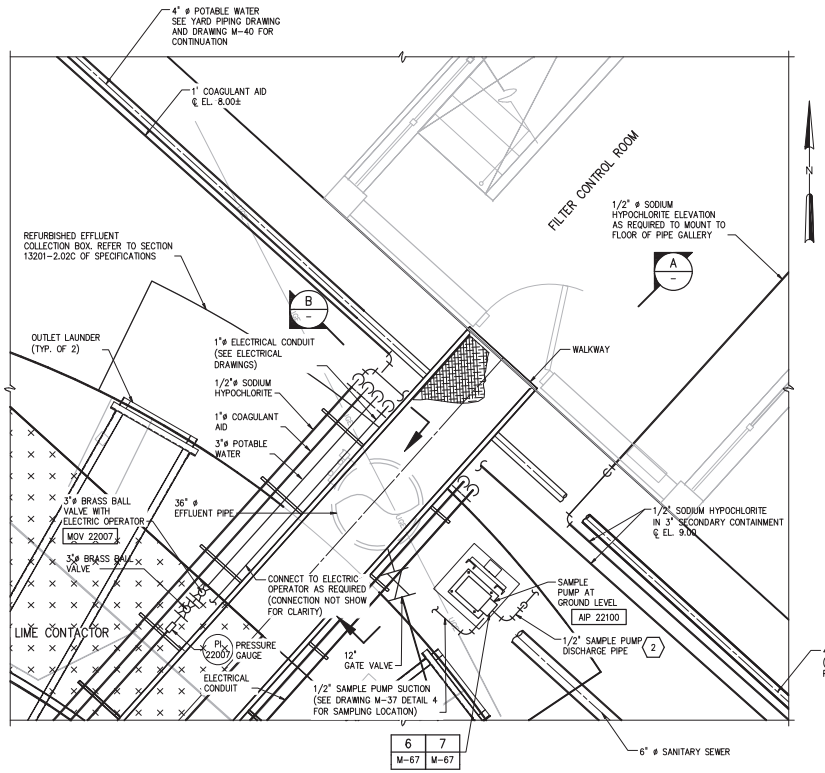

PLAN AT ELEVATION 35 ±

1/2"=1'-0"

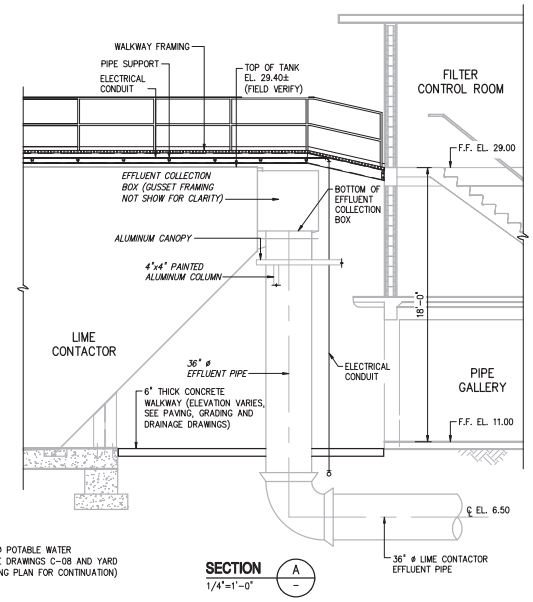

SECTION A
1/4"=1'-0"

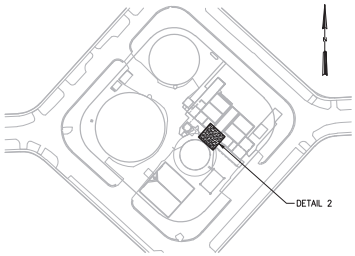

LOCATION MAP

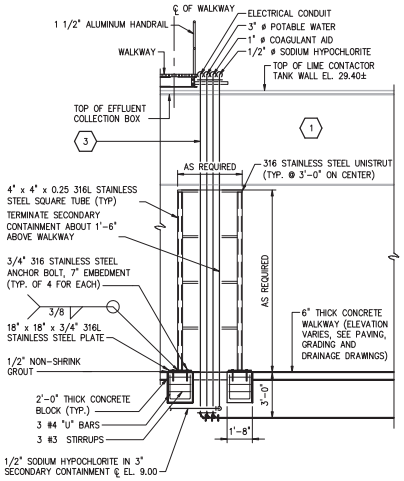

SECTION B
1/4"=1'-0"

KEYED NOTES:

1. EXISTING ALUMINUM CANOPY NOT SHOWN IN SECTION VIEW FOR CLARITY.
2. FIELD ROUTE THE PROPOSED SAMPLE PUMP DISCHARGE PIPE (WITH OWNER'S ASSISTANCE) TO THE EXISTING FILTER CONTROL ROOM LABORATORY FOR CONNECTION WITH THE PROPOSED WATER QUALITY ANALYZERS. (REFER TO DRAWING M-68 FOR PROPOSED ANALYZERS). FURNISH AND INSTALL PIPE SUPPORTS NEEDED. FOR PURPOSES OF BIDDING, ASSUME 200 FEET OF PROPOSED SAMPLE PUMP DISCHARGE PIPING.
3. THE LOCATION SHOWN FOR THE VERTICLE PIPING (AND CONDUIT) IS FOR CONCEPTUAL PURPOSES ONLY. COORDINATE ACTUAL LOCATION OF VERTICLE PIPES/CONDUITS TO SUIT FIELD CONDITIONS SO THAT PIPING/CONDUITS DO NOT CONFLICT WITH THE EXISTING ALUMINUM CANOPY.

LEGEND:

EXISTING
PROPOSED

1/4"=1'-0" 1 0 1 2 3 7'
1/2"=1'-0" 12" 0 1 3'

DETAIL 2
VARIES C-03

NO.	DATE	ISSUED FOR	BY
1	4/1/14	100% QA COMMENTS	H.J.V.

DESIGNED G.A.B.
DRAWN G.P.B.
CHECKED J.N.M.
PROJ. ENGR. G.A.B.

H. J. VIDAL P.E.
No. 37882

HAZEN AND SAWYER
Environmental Engineers & Scientists
4000 Hollywood Boulevard, Suite 750N
Hollywood, Florida 33021
Certificate of Authorization Number: 2771

SCALE: AS NOTED

CLIENTS PROJECT: –
ENGINEERS PROJECT: 44238-004
CAD REFERENCE: 44238-004BP3-C04

NORTH MIAMI FLORIDA
CITY OF NORTH MIAMI
PUBLIC WORKS UTILITIES

WINSON WATER TREATMENT PLANT
BID PACKAGE 3: WTP REHABILITATION
YARD PIPING – DETAILS
SHEET 1

DATE: JUNE 2014
SHEET: 21 OF 335
DRAWING: C-04

PERMITTING

File = H:\44238-004\Drawings\Bid Package 3 - WTP Rehab\Civil\44238-004BP3-C04 Saved by HsCad2 Save date = 6/9/2014 5:31 PM

PLOT DATE: 6/10/2014 11:12 AM BY: HSCAD1

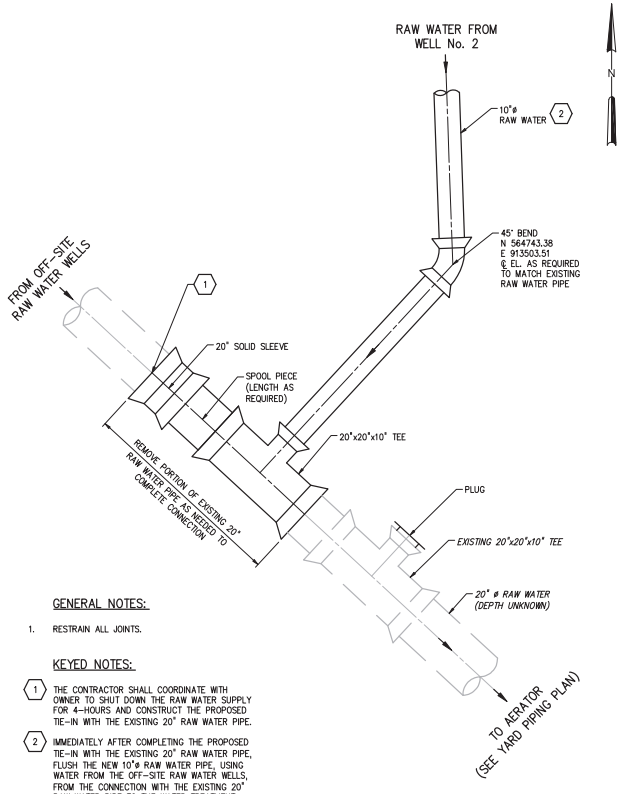

GENERAL NOTES:

1. RESTRAIN ALL JOINTS.

KEYED NOTES:

1. THE CONTRACTOR SHALL COORDINATE WITH OWNER TO SHUT DOWN THE RAW WATER SUPPLY FOR 4-HOURS AND CONSTRUCT THE PROPOSED TIE-IN WITH THE EXISTING 20" RAW WATER PIPE.

2. IMMEDIATELY AFTER COMPLETING THE PROPOSED TIE-IN WITH THE EXISTING 20" RAW WATER PIPE, FLUSH THE NEW 10"ø RAW WATER PIPE, USING WATER FROM THE OFF-SITE RAW WATER WELLS, FROM THE CONNECTION WITH THE EXISTING 20" RAW WATER PIPE TO THE WATER TREATMENT PLANT. PROVIDE ALL NEEDED TEMPORARY PIPING, ACCESSORIES AND VALVES AT THE WATER TREATMENT PLANT TO DISPOSE OF FLUSHING WATER.

DETAIL 3 / C-03
6" = 1'-0"

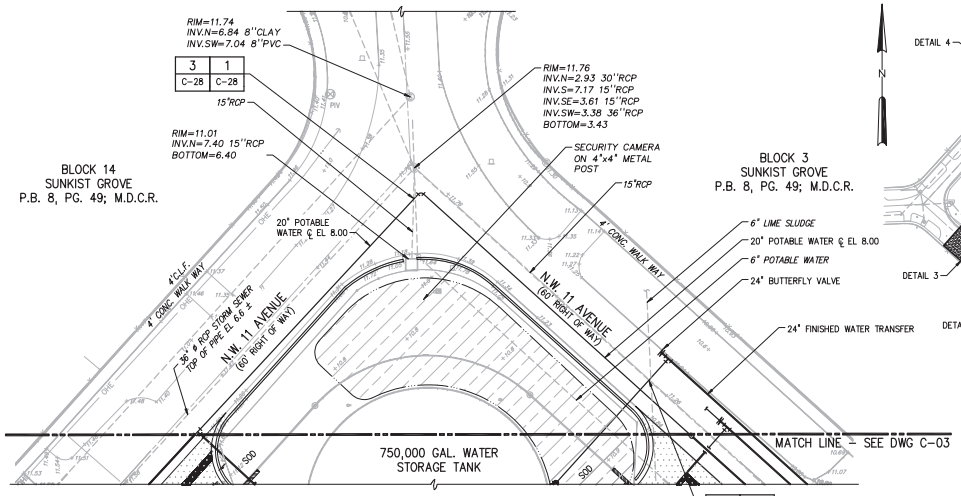

DETAIL 4 / C-03
1" = 20'-0"

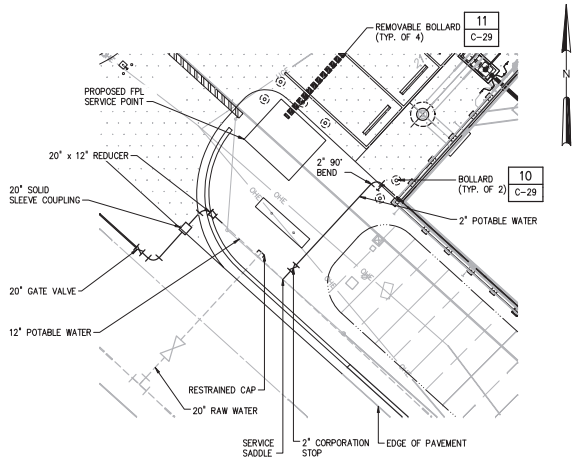

DETAIL 5 / C-03
1"=10'-0"

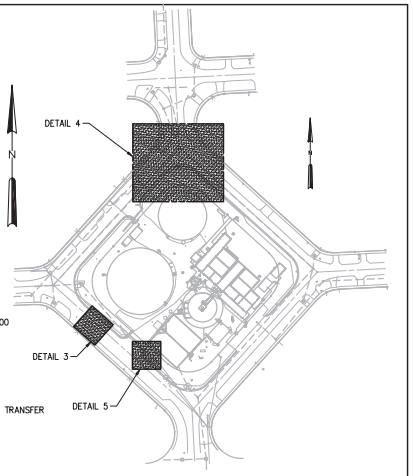

LOCATION MAP

LEGEND:

- WORK COMPLETED IN PHASE-I, II, III AND IV
- EXISTING
- PROPOSED
- PROPOSED STORM WATER SWALE
- PROPOSED PAVEMENT
- PROPOSED SIDEWALK
- PROPOSED SOD

6"=1'-0" 1' 0 1 2 3
1"=10'-0" 10 5 0 10'
1"=20'-0" 20 10 0 20'

NO.	DATE	ISSUED FOR	BY

DESIGNED G.A.B.
DRAWN G.P.B.
CHECKED J.N.M.
PROJ. ENGR. G.A.B.

H. J. VIDAL P.E.
No. 37882

HAZEN AND SAWYER
Environmental Engineers & Scientists
4000 Hollywood Boulevard, Suite 750N
Hollywood, Florida 33021
Certificate of Authorization Number: 2771

SCALE: AS NOTED

CLIENTS PROJECT: –
ENGINEERS PROJECT: 44238-004
CAD REFERENCE: 44238-004BP3-C05

NORTH MIAMI FLORIDA
CITY OF NORTH MIAMI
PUBLIC WORKS UTILITIES

WINSON WATER TREATMENT PLANT
BID PACKAGE 3: WTP REHABILITATION
YARD PIPING – DETAILS
SHEET 2

DATE: JUNE 2014
SHEET: 22 OF 335
DRAWING: C-05

PERMITTING

PLOT DATE: 6/10/2014 11:19 AM BY: HSCAU1

File = H:\44238-004\Drawings\Bid Package 3 - WTP Rehab\Civil\44238-004BP3-C05 Saved by HsCad2 Save date = 6/9/2014 6:44 PM

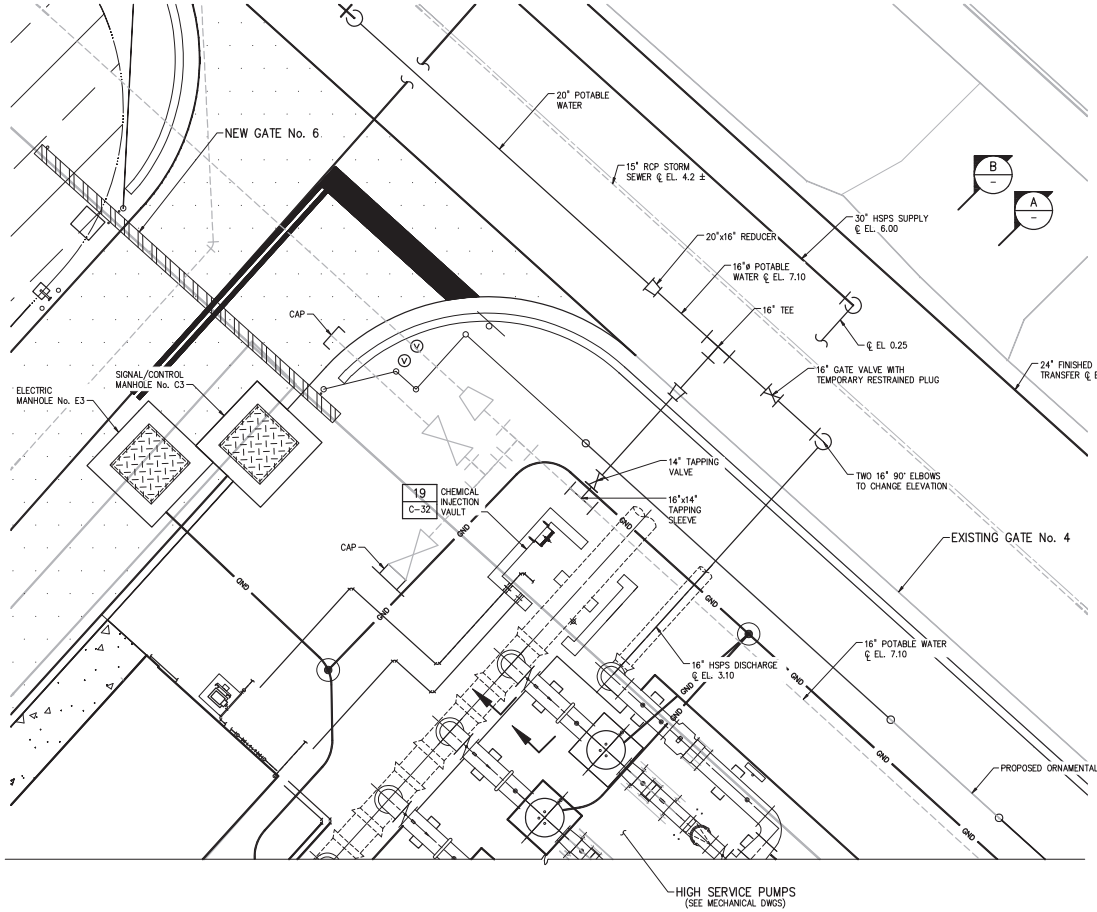

ENLARGED PLAN

DETAIL 6 / C-03
1"=5'-0"

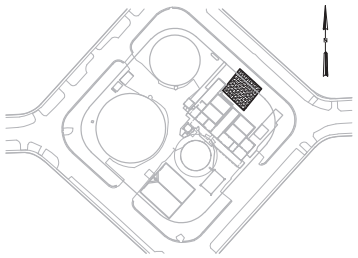

LOCATION MAP

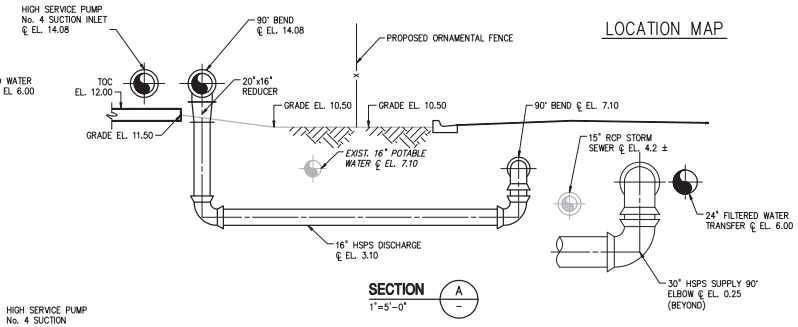

SECTION A / –
1"=5'-0"

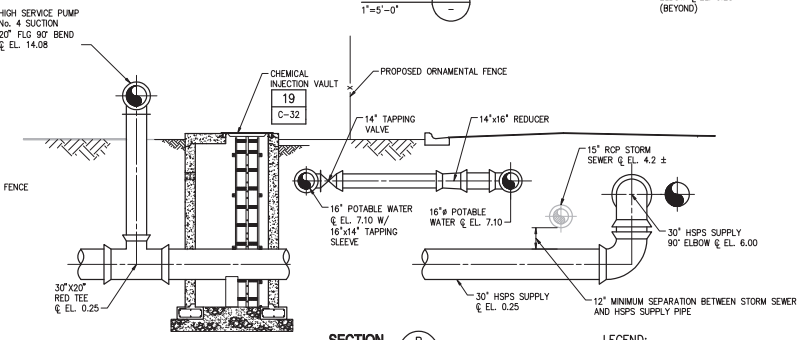

SECTION B / –
1"=5'-0"

LEGEND:

- WORK COMPLETED IN PHASE-I, II, III AND IV
- EXISTING
- PROPOSED
- PROPOSED STORM WATER SWALE
- PROPOSED PAVEMENT
- PROPOSED SIDEWALK
- PROPOSED SOD

1"=5'-0" 5 2.5 0 5'

NO.	DATE	ISSUED FOR	BY

DESIGNED G.A.B.
DRAWN G.P.B.
CHECKED J.N.M.
PROJ. ENGR. G.A.B.

H. J. VIDAL P.E.
No. 37882

HAZEN AND SAWYER
Environmental Engineers & Scientists
4000 Hollywood Boulevard, Suite 750N
Hollywood, Florida 33021
Certificate of Authorization Number: 2771

SCALE 1"=5'-0"

CLIENTS PROJECT: –
ENGINEERS PROJECT: 44238-004
CAD REFERENCE: 44238-004BP3-C06

NORTH MIAMI FLORIDA
CITY OF NORTH MIAMI
PUBLIC WORKS UTILITIES

WINSON WATER TREATMENT PLANT
BID PACKAGE 3: WTP REHABILITATION
YARD PIPING – DETAILS
SHEET 3

DATE: JUNE 2014
SHEET: 23 OF 335
DRAWING: C-06

PERMITTING

PLOT DATE: 6/10/2014 11:24 AM BY: HSCALI

File = H:\44238-004\Drawings\Bid Package 3 - WTP Rehab\Civil\44238-004BP3-C06 Saved by HScalli Save date = 6/9/2014 8:34 PM

PLANT POTABLE WATER FLOW METER VAULT TO BE REMOVED

PLANT POTABLE
WATER FLOW METER VAULT PHOTO 1
NTS

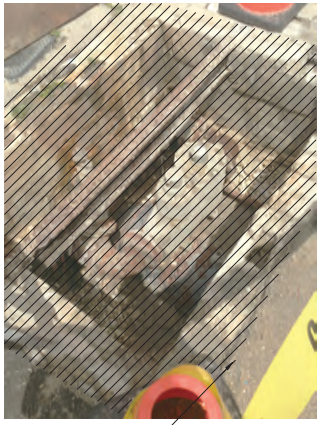

PLANT POTABLE WATER FLOW METER VAULT TO BE REMOVED

PLANT POTABLE
WATER FLOW METER VAULT PHOTO 2
NTS

2" PIPE, SERVICE UNKNOWN (TO REMAIN)

PLANT POTABLE WATER FLOW METER VAULT TO BE REMOVED

PLANT POTABLE
WATER FLOW METER VAULT PHOTO 3
NTS

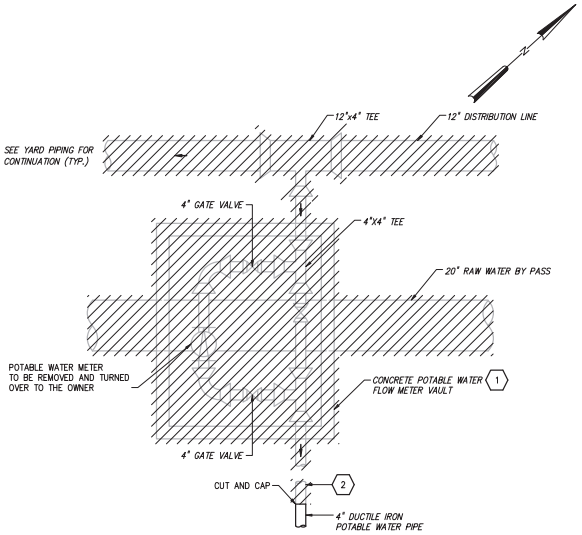

PLANT POTABLE WATER FLOW METER VAULT
DEMOLITION PLAN
NTS

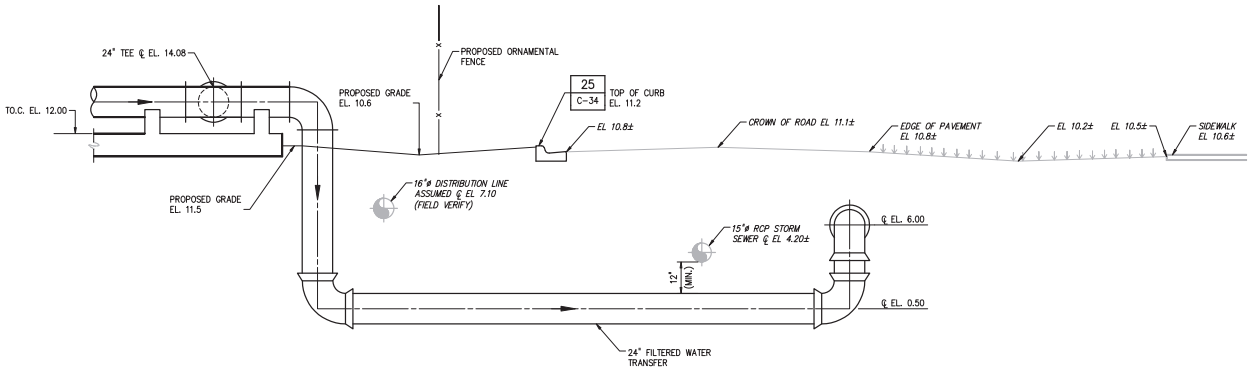

SECTION C / C-03
3" = 1'-0"

KEYED NOTES:

1. RECORD DRAWINGS OF THE PIPING WITHIN THE POTABLE WATER FLOW METER VAULT DO NOT EXIST.
2. DUE TO THE LACK OF RECORD DRAWINGS, THE QUANTITY OF EXISTING 4"ø POTABLE WATER PIPING TO BE REMOVED CAN NOT BE DETERMINED. FOR THE PURPOSE OF BIDDING ASSUME 200FT OF 4"ø PIPE SHALL BE REMOVED. THE ACTUAL AMOUNT SHALL BE DETERMINED BY THE OWNER DURING CONSTRUCTION TO SUIT FIELD CONDITIONS.

GENERAL NOTES:

1. BASED ON DISCUSSION WITH THE OWNER, THE OWNER HAS DETERMINED THAT POTABLE SERVICE TO THE WTP IS SUPPLIED THROUGH THE FLOW METER IN THIS VAULT.
2. THE EXISTING POTABLE WATER SERVICE TO THE PLANT SHALL REMAIN OPERATIONAL UNTIL A NEW SERVICE IS CONSTRUCTED AND ACCEPTED BY THE OWNER.

LEGEND:

EXISTING
PROPOSED
TO BE REMOVED

3"=1'-0"

NO.	DATE	ISSUED FOR	BY

DESIGNED G.A.B.
DRAWN L.M.S.
CHECKED J.N.M.
PROJ. ENGR. G.A.B.

H. J. VIDAL P.E.
No. 37882

HAZEN AND SAWYER
Environmental Engineers & Scientists
4000 Hollywood Boulevard, Suite 750N
Hollywood, Florida 33021
Certificate of Authorization Number: 2771

SCALE: AS NOTED

CLIENTS PROJECT: –
ENGINEERS PROJECT: 44238-004
CAD REFERENCE: 44238-004BP3-C07

NORTH MIAMI FLORIDA
CITY OF NORTH MIAMI
PUBLIC WORKS UTILITIES

WINSON WATER TREATMENT PLANT
BID PACKAGE 3: WTP REHABILITATION
YARD PIPING – DETAILS
SHEET 4

DATE: JUNE 2014
SHEET: 24 OF 335
DRAWING: C-07

PERMITTING

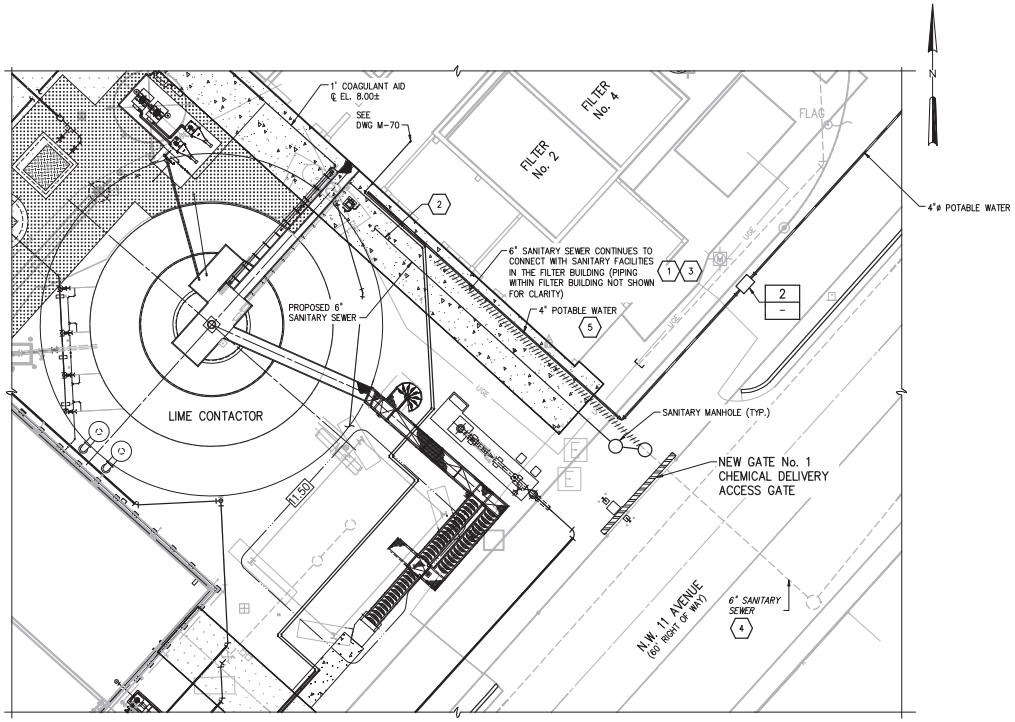

POTABLE WATER SERVICE PLAN

DETAIL 7
NTS –

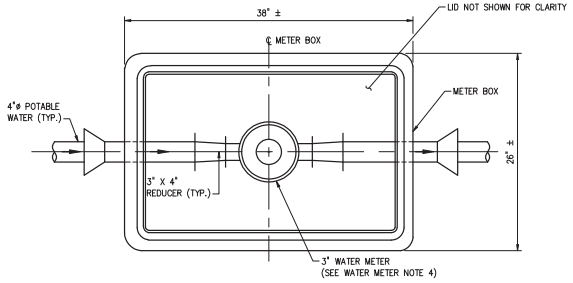

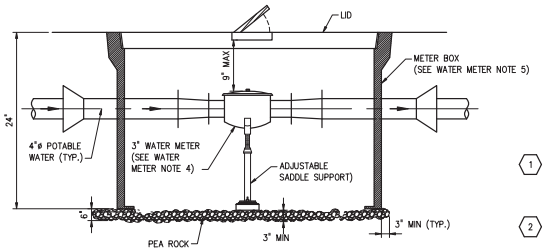

WATER METER INSTALLATION

DETAIL 2
NTS –

WATER METER NOTES:

1. ALL STRUCTURES SHALL BE TRAFFIC BEARING TYPE.
2. ALL METERS WILL BE SUPPLIED AND INSTALLED BY THE OWNER; ALL OTHER EQUIPMENT FOR A COMPLETE AND OPERABLE SYSTEM IS THE CONTRACTOR'S RESPONSIBILITY.
3. METER SHALL BE CENTERED IN BOX DIRECTLY UNDER THE ACCESS LID.
4. WATER METER SHALL BE WJ SERIES TURBINE METER BY SEA METRICS OR EQUAL AS APPROVED BY THE OWNER.
5. METER BOX SHALL BE POLYMER CONCRETE MODEL H2436-24 BY OLD CASTLE PRECAST OR EQUAL.

KEYED NOTES:

1. FURNISH AND INSTALL NEW SANITARY SEWER ALONG WITH ALL NEEDED MANHOLES AND SERVICE CONNECTIONS SUCH THAT THE SEPARATION DISTANCE WITH THE PROPOSED POTABLE WATER MEETS THE REQUIREMENTS OF DETAIL 1 ON DRAWING C-28.
2. QUANTITY OF PROPOSED SANITARY SEWER, SERVICE CONNECTIONS AND CLEANOUTS CANNOT BE DETERMINED BASED ON EXISTING RECORD DRAWINGS. SUPPLY ALL NECCESSARY MATERIAL, EQUIPMENT AND LABOR FOR A COMPLETE, OPERABLE AND PERMITTABLE SYSTEM.
3. REMOVE EXISTING 6" SANITARY SEWER AS REQUIRED BY OWNER IN THE FILED. ASSUME A MINIMUM OF 200 FEET OF PIPE.
4. DEPTH AND LOCATION OF EXISTING SEWER IS UNKNOWN; FIELD VERIFY. FOR THE PURPOSE OF BIDDING ASSUME THE TOP OF PIPE IS A MAXIMUM OF 6.0 FEET BELOW GROUND SURFACE.
5. LOCATION OF EXISTING WATER SERVICE CONNECTION FOR THE FILTER BUILDING IS UNKNOWN. FURNISH AND INSTALL ALL WATER PIPING NEEDED TO CONNECT PROPOSED WATER SUPPLY TO EXISTING FILTER BUILDING.

LEGEND:

EXISTING
PROPOSED
TO BE REMOVED

1"=1'-0" 12" 6 0 1'

NO.	DATE	ISSUED FOR	BY

DESIGNED G.A.B.
DRAWN L.M.S.
CHECKED J.N.M.
PROJ. ENGR. G.A.B.

H. J. VIDAL P.E.
No. 37882

HAZEN AND SAWYER
Environmental Engineers & Scientists
4000 Hollywood Boulevard, Suite 750N
Hollywood, Florida 33021
Certificate of Authorization Number: 2771

SCALE: AS NOTED

CLIENTS PROJECT: –
ENGINEERS PROJECT: 44238-004
CAD REFERENCE: 44238-004BP3-C08

NORTH MIAMI FLORIDA
CITY OF NORTH MIAMI
PUBLIC WORKS UTILITIES

WINSON WATER TREATMENT PLANT
BID PACKAGE 3: WTP REHABILITATION
YARD PIPING – DETAILS
SHEET 5

DATE: JUNE 2014
SHEET: 25 OF 335
DRAWING: C-08

PERMITTING

File = H:\44238-004\Drawings\Bid Package 3 - WTP Rehab\Civil\44238-004BP3-C08 Saved by HScalf1 Save date = 6/9/2014 7:07 PM

PLOT DATE: 6/10/2014 11:32 AM BY: HSCALF1

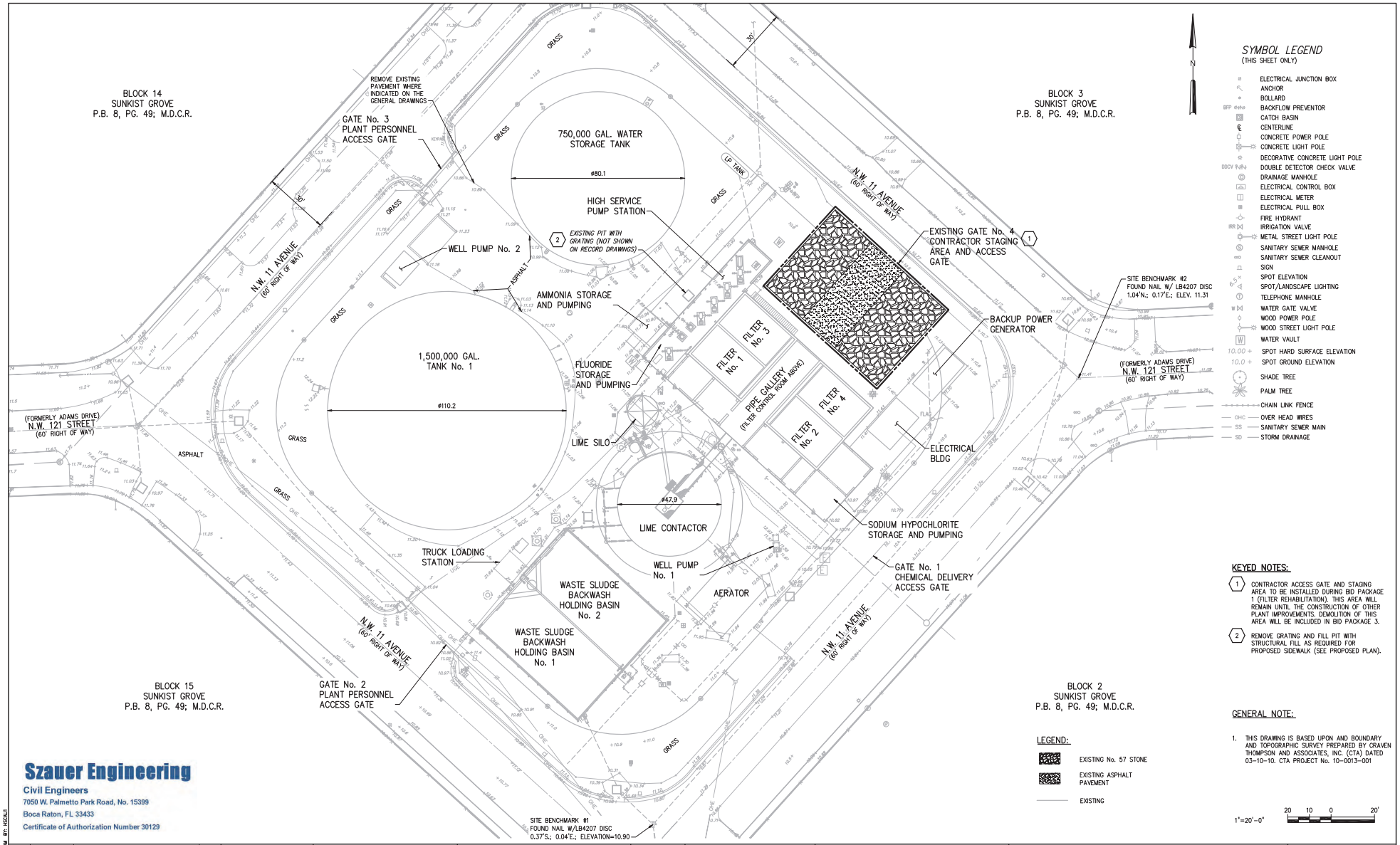

SYMBOL LEGEND
(THIS SHEET ONLY)

- ELECTRICAL JUNCTION BOX
- ANCHOR
- BOLLARD
- BFP — BACKFLOW PREVENTOR
- CATCH BASIN
- CENTERLINE
- CONCRETE POWER POLE
- CONCRETE LIGHT POLE
- DECORATIVE CONCRETE LIGHT POLE
- DDCV — DOUBLE DETECTOR CHECK VALVE
- DRAINAGE MANHOLE
- ELECTRICAL CONTROL BOX
- ELECTRICAL METER
- ELECTRICAL PULL BOX
- FIRE HYDRANT
- IRR — IRRIGATION VALVE
- METAL STREET LIGHT POLE
- SANITARY SEWER MANHOLE
- SANITARY SEWER CLEANOUT
- SIGN
- SPOT ELEVATION
- SPOT/LANDSCAPE LIGHTING
- TELEPHONE MANHOLE
- WATER GATE VALVE
- WOOD POWER POLE
- WOOD STREET LIGHT POLE
- W — WATER VAULT
- 10.00 + — SPOT HARD SURFACE ELEVATION
- 10.0 + — SPOT GROUND ELEVATION
- SHADE TREE
- PALM TREE
- CHAIN LINK FENCE
- OHC — OVER HEAD WIRES
- SS — SANITARY SEWER MAIN
- SD — STORM DRAINAGE

KEYED NOTES:

1. CONTRACTOR ACCESS GATE AND STAGING AREA TO BE INSTALLED DURING BID PACKAGE 1 (FILTER REHABILITATION). THIS AREA WILL REMAIN UNTIL THE CONSTRUCTION OF OTHER PLANT IMPROVEMENTS, DEMOLITION OF THIS AREA WILL BE INCLUDED IN BID PACKAGE 3.
2. REMOVE GRATING AND FILL PIT WITH STRUCTURAL FILL AS REQUIRED FOR PROPOSED SIDEWALK (SEE PROPOSED PLAN).

GENERAL NOTE:

1. THIS DRAWING IS BASED UPON AND BOUNDARY AND TOPOGRAPHIC SURVEY PREPARED BY CRAVEN THOMPSON AND ASSOCIATES, INC. (CTA) DATED 03-10-10. CTA PROJECT No. 10-0013-001

LEGEND:

- EXISTING No. 57 STONE
- EXISTING ASPHALT PAVEMENT
- EXISTING

1"=20'-0" 20 10 0 20'

Szauer Engineering
Civil Engineers
7050 W. Palmetto Park Road, No. 15399
Boca Raton, FL 33433
Certificate of Authorization Number 30129

NO.	DATE	ISSUED FOR	BY

DESIGNED G.A.B.
DRAWN L.M.S.
CHECKED J.N.M.
PROJ. ENGR. G.A.B.

JORGE M. SZAUER P.E.
No. 62579

HAZEN AND SAWYER
Environmental Engineers & Scientists
4000 Hollywood Boulevard, Suite 750N
Hollywood, Florida 33021
Certificate of Authorization Number: 2771

SCALE 1"=20'-0"

CLIENTS PROJECT: –
ENGINEERS PROJECT: 44238-004
CAD REFERENCE: 44238-004BP3-C09

NORTH MIAMI FLORIDA — CITY OF NORTH MIAMI
PUBLIC WORKS UTILITIES

WINSON WATER TREATMENT PLANT
BID PACKAGE 3: WTP REHABILITATION

PAVING, GRADING & DRAINAGE EXISTING PLAN

DATE: JUNE 2014
SHEET: 26 OF 335
DRAWING: C-09

PERMITTING

PLOT DATE: 6/10/2014 11:35 AM BY: HSCAUT

XREFs= ..\Base-BP3\C-Site-Survey-X,..\Tblock\44238-004-BP3-TB,..\Base-BP3\C-Site-Pipe-X,..\Base-BP3\C-BP3-SiteUtility

File = H:\44238-004\Drawings\Bid Package 3 - WTP Rehab\Civil\44238-004BP3-C09 Saved by HScaut Save date = 6/9/2014 7:33 PM

PHOTO 1
NTS

PHOTO 2
NTS

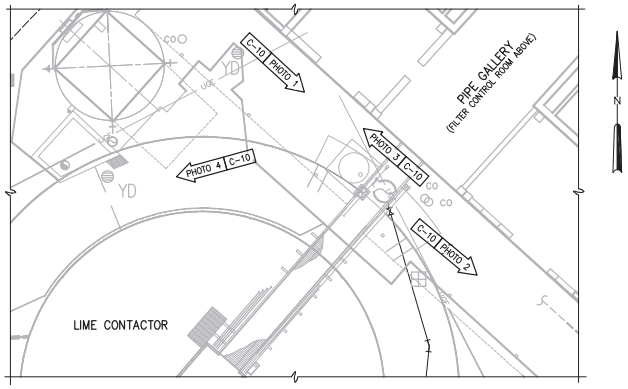

PHOTO LOCATION PLAN

PHOTO 3
NTS

PHOTO 4
NTS

GENERAL NOTES:

1. NO RECORD DRAWINGS EXIST FOR THIS STRUCTURE AND/OR AREA. PHOTOS PROVIDED FOR GENERAL INFORMATION PURPOSES.
2. THE CONTRACTOR SHALL FIELD VERIFY ALL EXISTING CONDITIONS PRIOR TO BID.
3. CONTRACTOR RETAINS FULL RESPONSIBILITY FOR FIELD VERIFICATION OF ALL ABOVE GROUND IMPROVEMENTS TO BE REMOVED FOR THIS WORK. SUCH VERIFICATION SHALL INCLUDE: STRUCTURAL, ARCHITECTURAL, HVAC, PLUMBING, ELECTRICAL, IRRIGATION, CONTROLS, FREE STANDING EQUIPMENT, LANDSCAPING, AND ANY AND ALL OTHER EXISTING IMPROVEMENTS WITHIN THE BOUNDARY OF THE WORK WHETHER SHOWN HEREIN OR NOT.
4. FOR BELOW GRADE IMPROVEMENTS TO BE REMOVED REFERENCE APPLICABLE CIVIL AND ELECTRICAL DRAWINGS ACCORDINGLY.
5. REFER TO SPECIFICATION SECTION ENTITLED "DEMOLITION OF EXISTING FACILITIES".
6. PRE-BID ACCESS TO THE SITE SHALL BE COORDINATED BY THE CONTRACTOR UPON REQUEST THROUGH A CONTACT TO BE DETERMINED BY THE CITY OF NORTH MIAMI.
7. FOR CONSTRUCTION SEQUENCING RESTRICTIONS FOR THE WORK SHOWN ON THIS SHEET REFERENCE THE SPECIFICATION ENTITLED "SUMMARY OF WORK".
8. FOR REQUIREMENTS RELATED TO DEMOLITION WORK, PROTECTION OF EXISTING FACILITIES AND MAINTENANCE OF OPERATIONS REFERENCE APPLICABLE SPECIFICATIONS IN DIVISION 1.

KEYED NOTES:

1. REMOVE CONCRETE WALKWAY.
2. REMOVE COAGULANT SYSTEM (SEE MECHANICAL).
3. PROTECT EXISTING CANOPY COLUMNS. (TYPICAL AT 12 LOCATIONS)
4. REMOVE OVERFLOW/SIDE DRAIN BOX (SEE MECHANICAL).
5. PROTECT LIME SILO COLUMNS AND CONCRETE FOOTINGS.
6. PROTECT LIME CONTACTOR AND ASSOCIATED FOUNDATION.
7. REMOVE AND REPLACE THE RAIN LEADER IN-KIND. REMOVE LEADER UP TO GUTTER; GUTTER TO REMAIN. PAINT THE NEW LEADER. TYPICAL AT 7 LOCATIONS.

LEGEND:

PHOTO # – ARROW INDICATES DIRECTION AND POINT OF VIEW OF PHOTO

TO BE REMOVED

Szauer Engineering
Civil Engineers
7050 W. Palmetto Park Road, No. 15399
Boca Raton, FL 33433
Certificate of Authorization Number 30129

PLOT DATE: 6/10/2014 11:37 AM BY: HSCAUI

NO.	DATE	ISSUED FOR	BY

DESIGNED G.A.B.
DRAWN G.P.B.
CHECKED J.N.M.
PROJ. ENGR. G.A.B.

JORGE M. SZAUER P.E.
No. 62579

HAZEN AND SAWYER
Environmental Engineers & Scientists
4000 Hollywood Boulevard, Suite 750N
Hollywood, Florida 33021
Certificate of Authorization Number: 2771

SCALE NTS

CLIENTS PROJECT: –
ENGINEERS PROJECT: 44238-004
CAD REFERENCE: 44238-004BP3-C10

NORTH MIAMI FLORIDA
CITY OF NORTH MIAMI
PUBLIC WORKS UTILITIES

WINSON WATER TREATMENT PLANT
BID PACKAGE 3: WTP REHABILITATION

PAVING, GRADING & DRAINAGE
EXISTING CONDITION PHOTOS

DATE: JUNE 2014
SHEET: 27 OF 335
DRAWING: C-10

PERMITTING

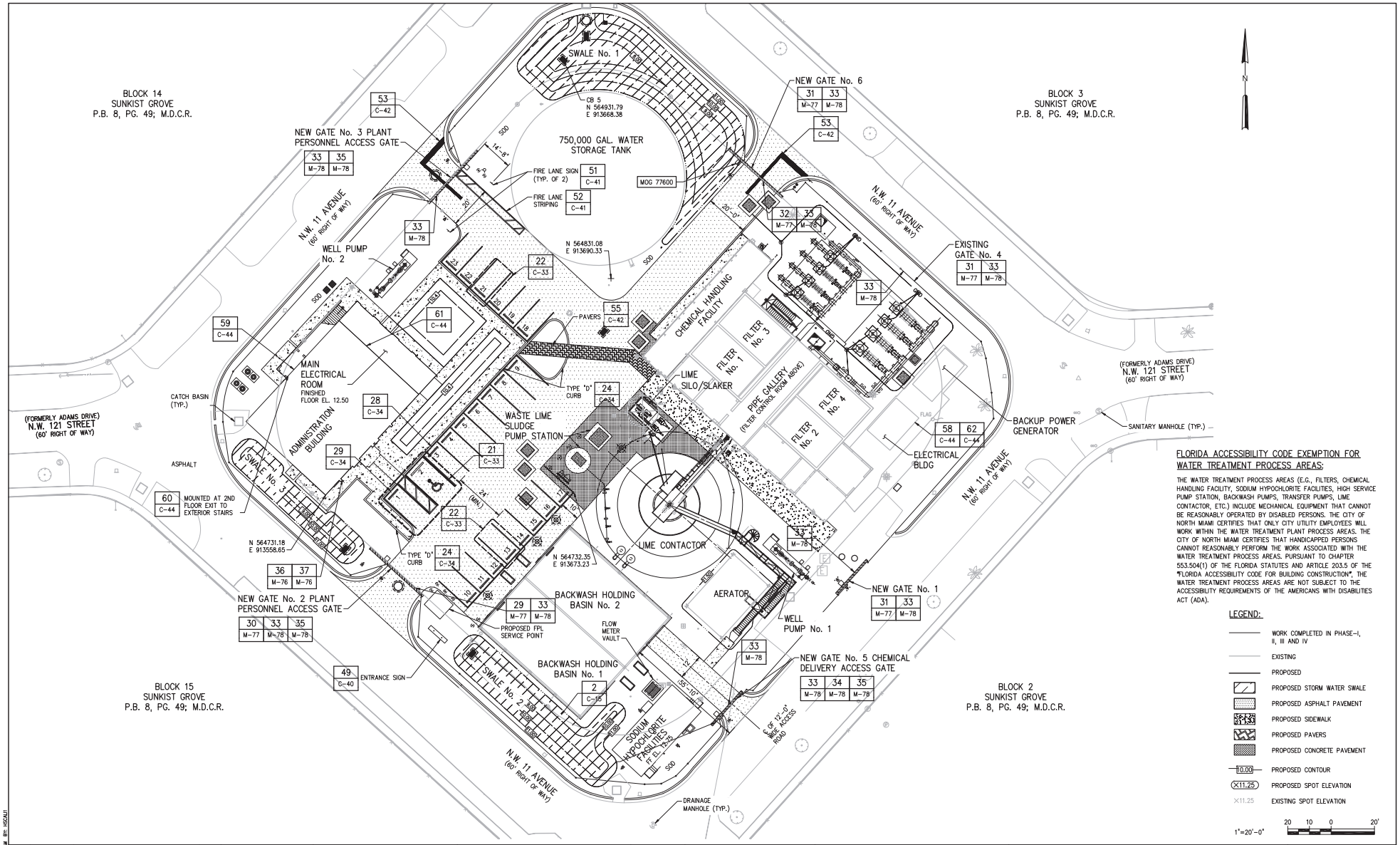

FLORIDA ACCESSIBILITY CODE EXEMPTION FOR WATER TREATMENT PROCESS AREAS:

THE WATER TREATMENT PROCESS AREAS (E.G., FILTERS, CHEMICAL HANDLING FACILITY, SODIUM HYPOCHLORITE FACILITIES, HIGH SERVICE PUMP STATION, BACKWASH PUMPS, TRANSFER PUMPS, LIME CONTACTOR, ETC.) INCLUDE MECHANICAL EQUIPMENT THAT CANNOT BE REASONABLY OPERATED BY DISABLED PERSONS. THE CITY OF NORTH MIAMI CERTIFIES THAT ONLY CITY UTILITY EMPLOYEES WILL WORK WITHIN THE WATER TREATMENT PLANT PROCESS AREAS. THE CITY OF NORTH MIAMI CERTIFIES THAT HANDICAPPED PERSONS CANNOT REASONABLY PERFORM THE WORK ASSOCIATED WITH THE WATER TREATMENT PROCESS AREAS. PURSUANT TO CHAPTER 553.504(1) OF THE FLORIDA STATUTES AND ARTICLE 203.5 OF THE "FLORIDA ACCESSIBILITY CODE FOR BUILDING CONSTRUCTION", THE WATER TREATMENT PROCESS AREAS ARE NOT SUBJECT TO THE ACCESSIBILITY REQUIREMENTS OF THE AMERICANS WITH DISABILITIES ACT (ADA).

LEGEND:

- WORK COMPLETED IN PHASE-I, II, III AND IV
- EXISTING
- PROPOSED
- PROPOSED STORM WATER SWALE
- PROPOSED ASPHALT PAVEMENT
- PROPOSED SIDEWALK
- PROPOSED PAVERS
- PROPOSED CONCRETE PAVEMENT
- 10.00 PROPOSED CONTOUR
- X11.25 PROPOSED SPOT ELEVATION
- X11.25 EXISTING SPOT ELEVATION

1"=20'-0" 20 10 0 20'

NO.	DATE	ISSUED FOR	BY

DESIGNED G.A.B.
DRAWN L.M.S.
CHECKED J.N.M.
PROJ. ENGR. G.A.B.

H. J. VIDAL P.E.
No. 37882

HAZEN AND SAWYER
Environmental Engineers & Scientists
4000 Hollywood Boulevard, Suite 750N
Hollywood, Florida 33021
Certificate of Authorization Number: 2771

SCALE 1"=20'-0"

CLIENTS PROJECT: –
ENGINEERS PROJECT: 44238-004
CAD REFERENCE: 44238-004BP3-C11

NORTH MIAMI FLORIDA
CITY OF NORTH MIAMI
PUBLIC WORKS UTILITIES

WINSON WATER TREATMENT PLANT
BID PACKAGE 3: WTP REHABILITATION

PAVEMENT MARKING AND SIGNAGE PLAN

DATE: JUNE 2014
SHEET: 28 OF 335
DRAWING: C-11

PERMITTING

PLOT DATE: 6/10/2014 11:39 AM BY: HSCAJI

File = H:\44238-004\Drawings\Bid Package 3 - WTP Rehab\Civil\44238-004BP3-C11 Saved by HSCadII Save date = 6/9/2014 7:20 PM

DEVELOPMENT DATA:

JURISDICTION: CITY OF NORTH MIAMI, FLORIDA
COUNTY: MIAMI-DADE
WATER PROVIDER: CITY OF NORTH MIAMI, FLORIDA
WASTEWATER PROVIDER: MIAMI-DADE WATER AND SEWER DEPARTAMENT

ZONING AND LAND USE:

ZONING OF ABUTTING PROPERTIES: RESIDENTIAL R2
ZONING OF PROJECT SITE: PUBLIC UTILITY
CURRENT LAND USE: DRINKING WATER STORAGE TANK AND WATER TREATMENT PLANT
PROPOSED LAND USE: DRINKING WATER STORAGE TANK AND WATER TREATMENT PLANT
PERMITTED USE: WATER TREATMENT FACILITIES ARE A PERMITTED USE

SITE DATA:

ZONING CLASSIFICATION	PUBLIC UTILITY (PU)
ADJACENT ZONING CLASSIFICATION	RESIDENTIAL-2
MAXIMUM HEIGHT ALLOWABLE	55 FT
GROSS SITE AREA	1.82 ACRES
EXISTING SITE CONDITIONS (SQ FT/% OF TOTAL AREA)	
PERVIOUS AREA	0.83 AC/46%
IMPERVIOUS AREA	0.35 AC/19%
BUILDING AREA	0.64 AC/35%
PROPOSED SITE CONDITIONS (SQ FT/% OF TOTAL AREA)	
PERVIOUS AREA	0.72 AC/40%
IMPERVIOUS AREA	0.59 AC/32%
BUILDING AREA	0.51 AC/28%

ADMINISTRATION BUILDING DATA

BUILDING LENGTH	62.875 FT
BUILDING WIDTH	50.5 FT
GROSS AREA	6,350 SQ FT
NUMBER OF FLOORS	2
FIRST FLOOR AREA	3,175 SQ FT
SECOND FLOOR AREA	3,175 SQ FT
LEED CLASSIFICATION (PER CODE SECTION 5-805)	SILVER
MAX STRUCTURE HEIGHT	35.33 FT
SETBACK FROM PROPERTY LINE (SW CORNER)	10 FT

ON-SITE VEHICLE PARKING DATA (PER CODE SECTION 5-1402)

No. OF SPACES PER 300 SQFT GROSS AREA	1
TOTAL No. OF NON-HANDICAP SPACES PROPOSED	6,350/300=22 SPACES
No. OF HANDICAP ACCESSIBLE SPACES PER FAC 11-4.4.2(5)	1 SPACE
TOTAL No. OF SPACES PROPOSED	23 SPACES
PARKING SPACE DIMENSIONS	
A) SPACES 1,3 THRU 9	9 FT BY 20 FT
B) SPACES 10 THRU 23	9 FT BY 18 FT
C) SPACE 2 (HANDICAP)	12 FT BY 20 FT
MINIMUM AISLE WIDTH-TWO WAY	24 FT
NUMBER OF BICYCLE PARKING SPACES	4 SPACES
PER CHAPTER 29, ARTICLE 5, SECTION 5-803.E.2.a	

MISCELLANEOUS NOTES:

PROJECT WILL BE CONSTRUCTED IN ONE STAGE BY A SINGLE CONTRACTOR.
FIRE PREVENTION: SMOKE DETECTORS, UNSPRINKLERED.

ACCESSIBILITY REQUIREMENTS:

THE WATER TREATMENT PROCESS AREAS (E.G., FILTERS, CHEMICAL HANDLING FACILITY, SODIUM HYPOCHLORITE FACILITIES, HIGH SERVICE PUMP STATION, BACKWASH PUMPS, TRANSFER PUMPS, LIME CONTACTOR, ETC.) INCLUDE MECHANICAL EQUIPMENT THAT CANNOT BE REASONABLY OPERATED BY DISABLED PERSONS. THE CITY OF NORTH MIAMI CERTIFIES THAT ONLY CITY UTILITY EMPLOYEES WILL WORK WITHIN THE WATER TREATMENT PLANT PROCESS AREAS. THE CITY OF NORTH MIAMI CERTIFIES THAT HANDICAPPED PERSONS CANNOT REASONABLY PERFORM THE WORK ASSOCIATED WITH THE WATER TREATMENT PROCESS AREAS. PURSUANT TO CHAPTER 553.504(1) OF THE FLORIDA STATUTES AND ARTICLE 203.5 OF THE "FLORIDA ACCESSIBILITY CODE FOR BUILDING CONSTRUCTION", THE WATER TREATMENT PROCESS AREAS ARE NOT SUBJECT TO THE ACCESSIBILITY REQUIREMENTS OF THE AMERICANS WITH DISABILITIES ACT (ADA).

FIRE HYDRANTS:

THE PROPOSED FACILITY WILL BE SERVED BY THE PROPOSED HYDRANT LOCATED NEAR THE NEW GATE No.3.

NEEDED FIRE FLOW (NFF) CALCULATIONS:

STANDARD: CALCULATED USING THE "GUIDE FOR THE CALCULATION OF NEEDED FIRE FLOW", EDITION 05-2008, AS PUBLISHED BY THE INSURANCE SERVICES OFFICE (ISO).
ISO CONSTRUCTION CLASS: NON-COMBUSTIBLE CLASS IV
F = COEFFICIENT RELATED TO CLASS OF CONSTRUCTION = 0.8
A = EFFECTIVE AREA (SQUARE FEET) = 3.969 SQUARE FEET
CI = 907 = BASE FLOW (GALLONS PER MINUTE, GPM)
CI = 907 (CALCULATED), CI = 1,000 GPM (ROUNDED TO THE NEAREST 250 GPM)
OCCUPANCY COMBUSTIBILITY CLASS = C-2 (LIMITED COMBUSTIBLE)
OI = OCCUPANCY FACTOR = 0.85
DISTANCE TO OTHER BUILDINGS: 31 TO 60 FEET
X = FACTOR FOR EXPOSURE = 0.13 (ALL FOUR SIDES)
NEEDED FIRE FLOW (NFF): 850 GPM
NFF ROUNDED TO NEAREST 250 GPM: 1,000 GPM
DISTANCE TO CLOSEST FIRE HYDRANT: LESS THAN 300 FEET
MAXIMUM FLOW CREDIT FOR FIRE HYDRANT (<300 FT AWAY): 1,000 GPM

FIRE PROTECTION NOTES:

1. FIRE HYDRANT CLEARANCE: CLEARANCES OF 7'-6" IN FRONT OF AND TO THE SIDES OF THE FIRE HYDRANT, WITH A FOUR FOOT (4') CLEARANCE TO THE REAR. NOTE: "NO PARKING" SIGNS OR OTHER DESIGNATION INDICATING THAT PARKING IS PROHIBITED SHALL BE PROVIDED IN THE 7'-6" SPACE ON BOTH SIDES OF THE CENTER LINE OF THE HYDRANT. ALL PAVEMENT MARKINGS SHALL BE OF THERMOPLASTIC PAINT. (FLORIDA FIRE PREVENTION CODE 2010 EDITION, SECTION 18.3.4.1).
2. FIRE HYDRANT VISIBILITY AND ACCESS: NO PERSON SHALL PLACE OR KEEP ANY POST, FENCE, VEHICLE, GROWTH, VEGETATION, TRASH OR STORAGE OR OTHER MATERIALS THAT WOULD OBSTRUCT A FIRE HYDRANT OR FIRE PROTECTION APPLIANCE AND HINDER OR PREVENT ITS IMMEDIATE USE BY FIRE DEPARTMENT PERSONNEL. NOTE: ONE (1) BLUE DOUBLE-REFLECTIVE DEPARTMENT OF TRANSPORTATION TYPE ROAD MARKER IS TO BE ADHERED TO THE HARD SURFACES ROADWAY IN THE MIDDLE OF THE LANE NEAREST TO, AND DIRECTLY IN FRONT OF THE FIRE HYDRANTS.
3. ACCESS GATES: ALL ACCESS GATES SHALL BE EQUIPPED WITH A KNOX BOX MODEL 3502 ELECTRIC OVERRIDE KEY SWITCH AS REQUIRED BY MIAMI-DADE FIRE RESCUE.

PLOT DATE: 6/10/2014 11:42 AM BY: HSCAJI

NO.	DATE	ISSUED FOR	BY

XREFs= ..\Tblock\44238-004-BP3-TB

DESIGNED G.A.B.
DRAWN L.M.S.
CHECKED J.N.M.
PROJ. ENGR. G.A.B.

H. J. VIDAL P.E.
No. 37882

HAZEN AND SAWYER
Environmental Engineers & Scientists
4000 Hollywood Boulevard, Suite 750N
Hollywood, Florida 33021
Certificate of Authorization Number: 2771

SCALE –

CLIENTS PROJECT: –
ENGINEERS PROJECT: 44238-004
CAD REFERENCE: 44238-004BP3-C12

NORTH MIAMI FLORIDA
CITY OF NORTH MIAMI
PUBLIC WORKS UTILITIES

WINSON WATER TREATMENT PLANT
BID PACKAGE 3: WTP REHABILITATION
SITE PLAN DETAILS

DATE: JUNE 2014
SHEET: 29 OF 335
DRAWING: C-12

PERMITTING

File = H:\44238-004\Drawings\Bid Package 3 - WTP Rehab\Civil\44238-004BP3-C12 Saved by HsCaJI2 Save date = 6/9/2014 7:47 PM

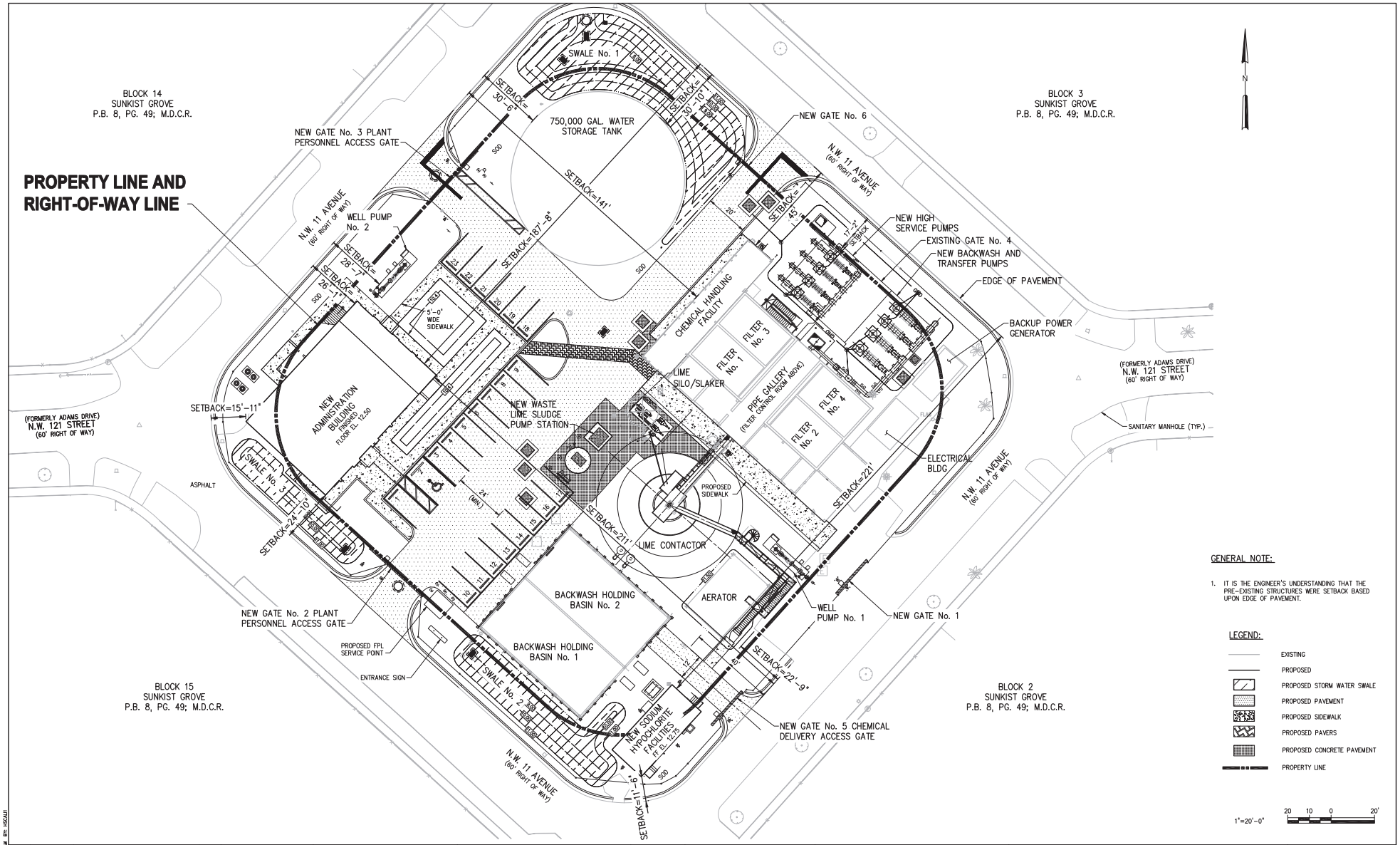

GENERAL NOTE:

1. IT IS THE ENGINEER'S UNDERSTANDING THAT THE PRE-EXISTING STRUCTURES WERE SETBACK BASED UPON EDGE OF PAVEMENT.

LEGEND:

- EXISTING
- PROPOSED
- PROPOSED STORM WATER SWALE
- PROPOSED PAVEMENT
- PROPOSED SIDEWALK
- PROPOSED PAVERS
- PROPOSED CONCRETE PAVEMENT
- PROPERTY LINE

1"=20'-0" 20 10 0 20'

NO.	DATE	ISSUED FOR	BY

DESIGNED G.A.B.
DRAWN L.M.S.
CHECKED J.N.M.
PROJ. ENGR. G.A.B.

H. J. VIDAL P.E.
No. 37882

HAZEN AND SAWYER
Environmental Engineers & Scientists
4000 Hollywood Boulevard, Suite 750N
Hollywood, Florida 33021
Certificate of Authorization Number: 2771

SCALE 1"=20'-0"

CLIENTS PROJECT: –
ENGINEERS PROJECT: 44238-004
CAD REFERENCE: 44238-004BP3-C13

NORTH MIAMI FLORIDA
CITY OF NORTH MIAMI
PUBLIC WORKS UTILITIES

WINSON WATER TREATMENT PLANT
BID PACKAGE 3: WTP REHABILITATION
SETBACK PLAN

DATE: JUNE 2014
SHEET: 30 OF 335
DRAWING: C-13

PERMITTING

PLOT DATE: 6/10/2014 11:45 AM BY: HSCAJ1

File = H:\44238-004\Drawings\Bid Package 3 - WTP Rehab\Civil\44238-004BP3-C13 Saved by HScaJ1 Save date = 6/9/2014 5:13 PM

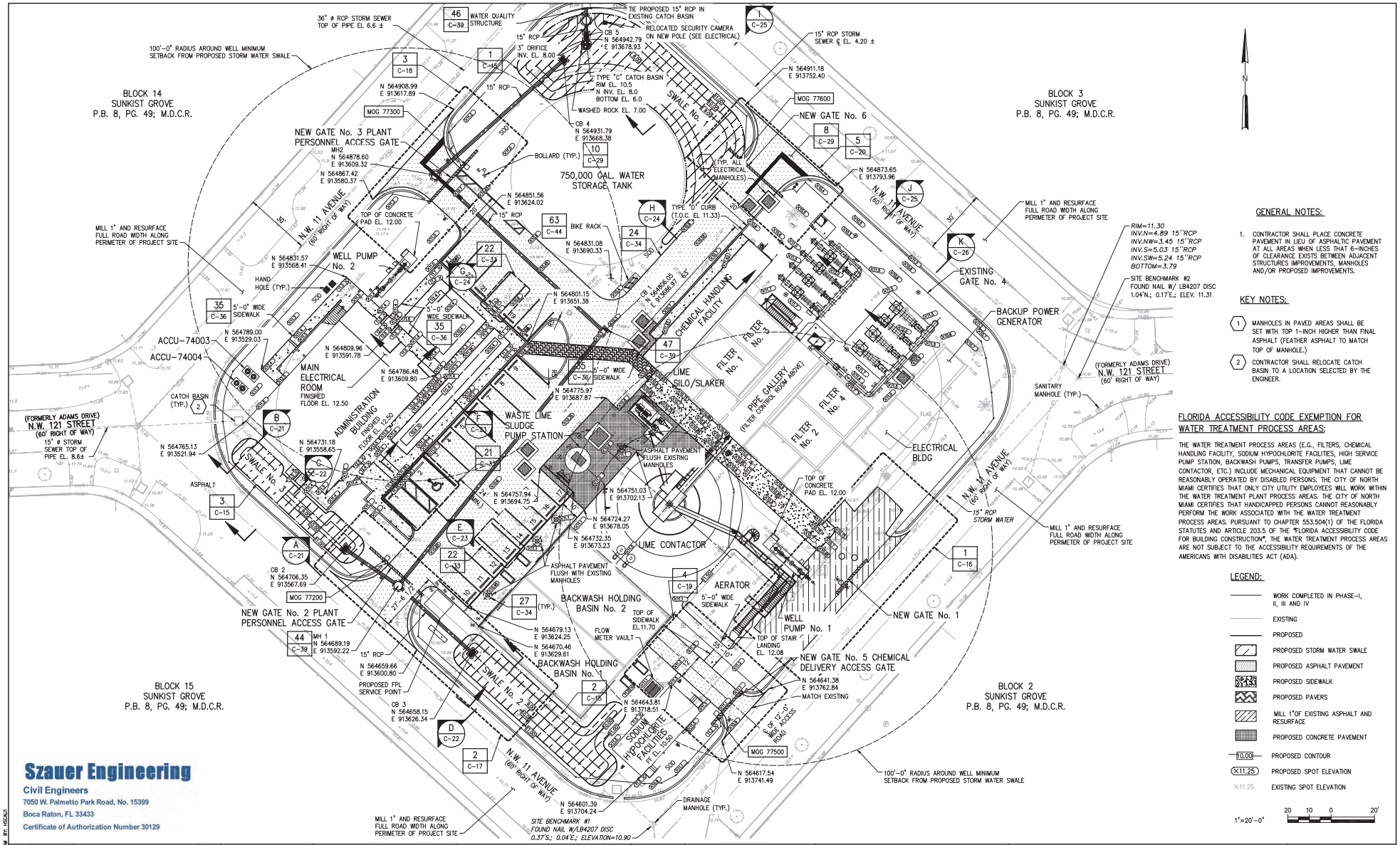

GENERAL NOTES:

1. CONTRACTOR SHALL PLACE CONCRETE PAVEMENT IN LIEU OF ASPHALTIC PAVEMENT AT ALL AREAS WHEN LESS THAT 6-INCHES OF CLEARANCE EXISTS BETWEEN ADJACENT STRUCTURES IMPROVEMENTS, MANHOLES AND/OR PROPOSED IMPROVEMENTS.

KEY NOTES:

1. MANHOLES IN PAVED AREAS SHALL BE SET WITH TOP 1-INCH HIGHER THAN FINAL ASPHALT (FEATHER ASPHALT TO MATCH TOP OF MANHOLE.)
2. CONTRACTOR SHALL RELOCATE CATCH BASIN TO A LOCATION SELECTED BY THE ENGINEER.

FLORIDA ACCESSIBILITY CODE EXEMPTION FOR WATER TREATMENT PROCESS AREAS:

THE WATER TREATMENT PROCESS AREAS (E.G., FILTERS, CHEMICAL HANDLING FACILITY, SODIUM HYPOCHLORITE FACILITIES, HIGH SERVICE PUMP STATION, BACKWASH PUMPS, TRANSFER PUMPS, LIME CONTACTOR, ETC.) INCLUDE MECHANICAL EQUIPMENT THAT CANNOT BE REASONABLY OPERATED BY DISABLED PERSONS. THE CITY OF NORTH MIAMI CERTIFIES THAT ONLY CITY UTILITY EMPLOYEES WILL WORK WITHIN THE WATER TREATMENT PLANT PROCESS AREAS. THE CITY OF NORTH MIAMI CERTIFIES THAT HANDICAPPED PERSONS CANNOT REASONABLY PERFORM THE WORK ASSOCIATED WITH THE WATER TREATMENT PROCESS AREAS. PURSUANT TO CHAPTER 553.504(1) OF THE FLORIDA STATUTES AND ARTICLE 203.5 OF THE "FLORIDA ACCESSIBILITY CODE FOR BUILDING CONSTRUCTION", THE WATER TREATMENT PROCESS AREAS ARE NOT SUBJECT TO THE ACCESSIBILITY REQUIREMENTS OF THE AMERICANS WITH DISABILITIES ACT (ADA).

LEGEND:

- WORK COMPLETED IN PHASE-I, II, III AND IV
- EXISTING
- PROPOSED
- PROPOSED STORM WATER SWALE
- PROPOSED ASPHALT PAVEMENT
- PROPOSED SIDEWALK
- PROPOSED PAVERS
- MILL 1"OF EXISTING ASPHALT AND RESURFACE
- PROPOSED CONCRETE PAVEMENT
- 10.00 PROPOSED CONTOUR
- X11.25 PROPOSED SPOT ELEVATION
- X11.25 EXISTING SPOT ELEVATION

1"=20'-0" 20 10 0 20'

Szauer Engineering
Civil Engineers
7050 W. Palmetto Park Road, No. 15399
Boca Raton, FL 33433
Certificate of Authorization Number 30129

NO.	DATE	ISSUED FOR	BY
1	4/1/14	100% QA COMMENTS	H.J.V.

PLOT DATE: 6/10/2014 11:47 AM BY: HSCAD1

DESIGNED G.A.B.
DRAWN L.M.S.
CHECKED J.N.M.
PROJ. ENGR. G.A.B.

JORGE M. SZAUER P.E.
No. 62579

HAZEN AND SAWYER
Environmental Engineers & Scientists
4000 Hollywood Boulevard, Suite 750N
Hollywood, Florida 33021
Certificate of Authorization Number: 2771

SCALE 1"=20'-0"

CLIENTS PROJECT: –
ENGINEERS PROJECT: 44238-004
CAD REFERENCE: 44238-004BP3-C14

NORTH MIAMI FLORIDA
CITY OF NORTH MIAMI
PUBLIC WORKS UTILITIES

WINSON WATER TREATMENT PLANT
BID PACKAGE 3: WTP REHABILITATION

PAVING, GRADING & DRAINAGE PROPOSED PLAN

DATE: JUNE 2014
SHEET: 31 OF 335
DRAWING: C-14

PERMITTING

File = H:\44238-004\Drawings\Bid Package 3 - WTP Rehab\Civil\44238-004BP3-C14 Saved by HsCad2 Save date = 6/9/2014 6:18 PM

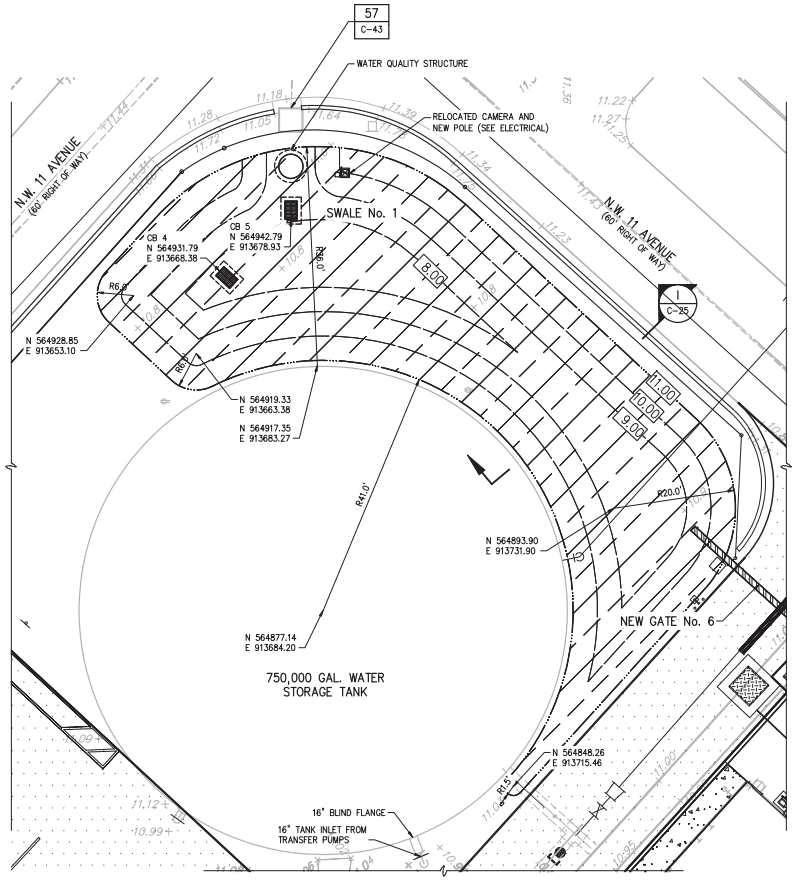

PLAN

DETAIL 1 (C-14) 1"=10'-0"

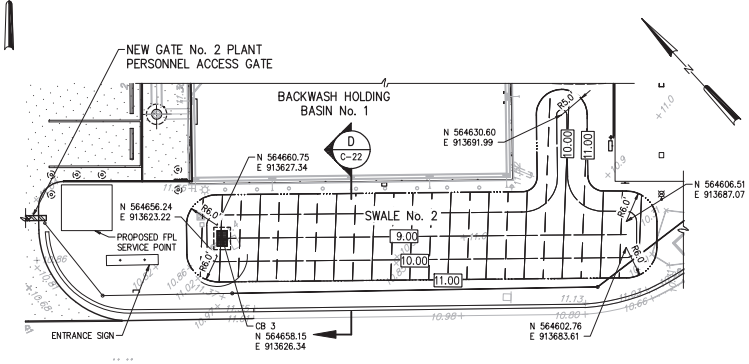

PLAN

DETAIL 2 (C-14) 1"=10'-0"

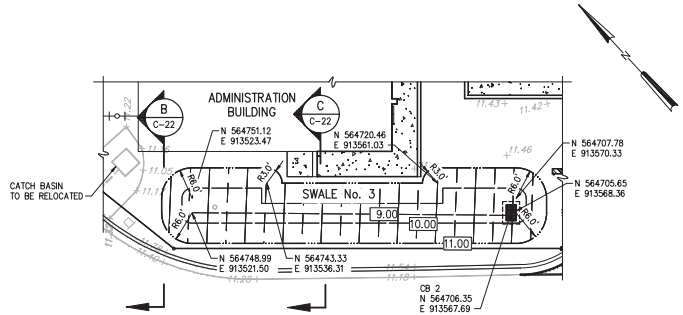

PLAN

DETAIL 3 (C-14) 1"=10'-0"

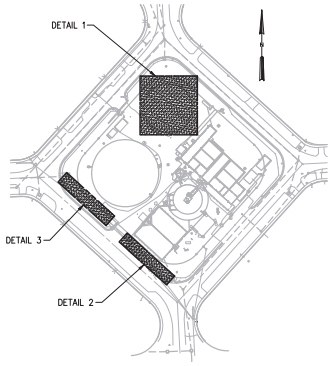

LOCATION MAP

LEGEND:

- WORK COMPLETED IN PHASE-I, II, III AND IV
- EXISTING
- PROPOSED
- PROPOSED STORM WATER SWALE
- PROPOSED ASPHALT PAVEMENT
- PROPOSED SIDEWALK
- 10.00 PROPOSED CONTOUR
- X11.25 PROPOSED SPOT ELEVATION
- X11.25 EXISTING SPOT ELEVATION

1"=10'-0" 10 5 0 10'

Szauer Engineering
Civil Engineers
7050 W. Palmetto Park Road, No. 15399
Boca Raton, FL 33433
Certificate of Authorization Number 30129

PLOT DATE: 6/10/2014 12:01 PM BY: HSCAD1

NO.	DATE	ISSUED FOR	BY

DESIGNED G.A.B.
DRAWN L.M.S.
CHECKED J.N.M.
PROJ. ENGR. G.A.B.

JORGE M. SZAUER P.E.
No. 62579

HAZEN AND SAWYER
Environmental Engineers & Scientists
4000 Hollywood Boulevard, Suite 750N
Hollywood, Florida 33021
Certificate of Authorization Number: 2771

SCALE 1"=10'-0"

CLIENTS PROJECT: –
ENGINEERS PROJECT: 44238-004
CAD REFERENCE: 44238-004BP3-C15

NORTH MIAMI FLORIDA
CITY OF NORTH MIAMI
PUBLIC WORKS UTILITIES

WINSON WATER TREATMENT PLANT
BID PACKAGE 3: WTP REHABILITATION

SWALES DRAINAGE
PROPOSED PLAN

DATE: JUNE 2014
SHEET: 32 OF 335
DRAWING: C-15

PERMITTING

File = H:\44238-004\Drawings\Bid Package 3 - WTP Rehab\Civil\44238-004BP3-C15 Saved by HScall Save date = 6/9/2014 8:41 PM

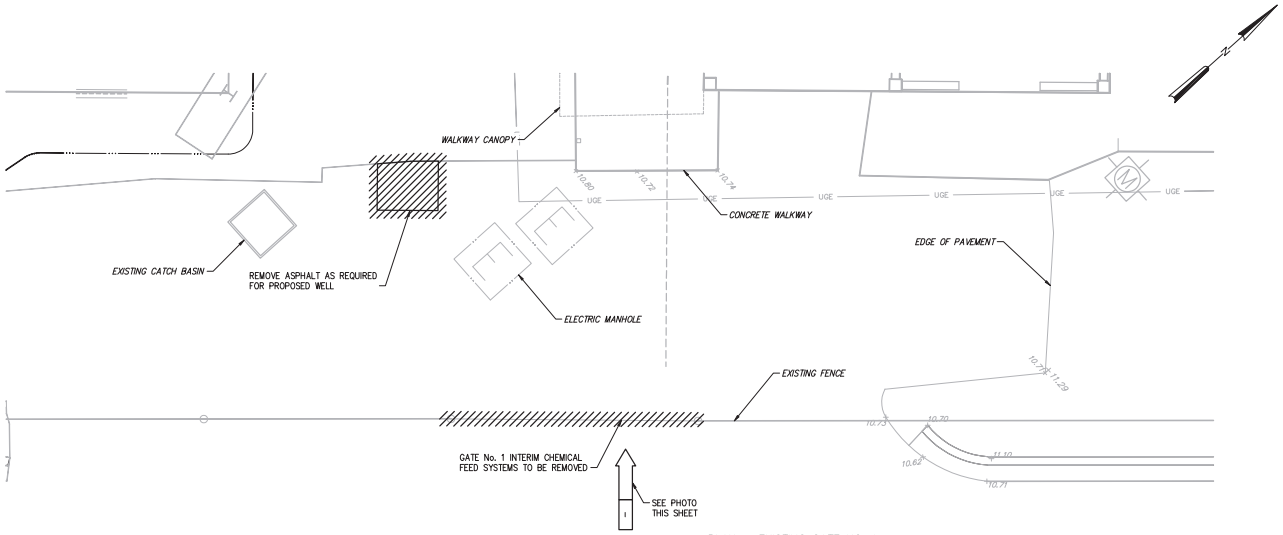

PLAN – EXISTING GATE NO. 1

DETAIL 1 / G-16
1"=5'-0"

PHOTO – EXISTING GATE NO 1
NTS

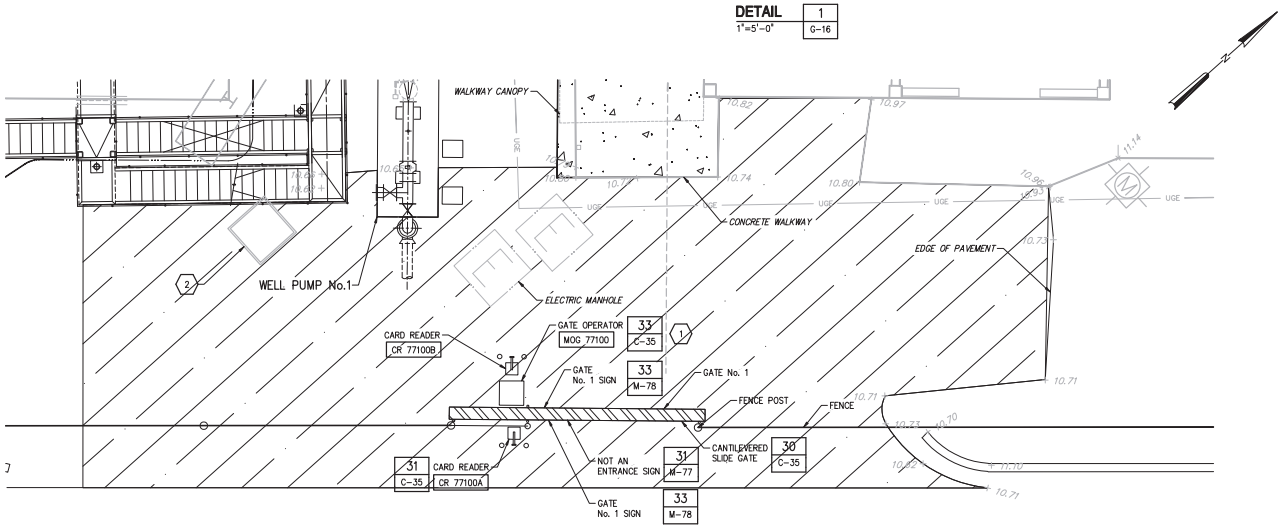

PLAN – PROPOSED GATE NO. 1

DETAIL 1 / C-14
1"=5'-0"

KEYED NOTES:

1. ALL MOTORIZED GATES SHALL BE PROVIDED WITH VEHICLE DETECTION LOOPS PER THE ELECTRICAL DRAWINGS.
2. REMOVE AND DISPOSE OF ALL DEBRIS IN EXISTING CATCH BASIN. FOR THE PURPOSE OF BIDDING ASSUME 50 CUBIC FEET OF DEBRIS.

LEGEND:

- EXISTING
- PROPOSED
- PROPOSED STORM WATER SWALE
- PROPOSED ASPHALT PAVEMENT
- MILL 1"OF EXISTING ASPHALT AND RESURFACE (MATCH EXISTING GRADE)
- TO BE REMOVED
- 10.00 PROPOSED CONTOUR
- ⊗11.25 PROPOSED SPOT ELEVATION
- ×11.25 EXISTING SPOT ELEVATION

1"=5'-0" 5 2.5 0 5'

NO.	DATE	ISSUED FOR	BY

DESIGNED G.A.B.
DRAWN L.M.S.
CHECKED J.N.M.
PROJ. ENGR. G.A.B.

H. J. VIDAL P.E.
No. 37882

HAZEN AND SAWYER
Environmental Engineers & Scientists
4000 Hollywood Boulevard, Suite 750N
Hollywood, Florida 33021
Certificate of Authorization Number: 2771

SCALE 1"=5'-0"

CLIENTS PROJECT: –
ENGINEERS PROJECT: 44238-004
CAD REFERENCE: 44238-004BP3-C16

NORTH MIAMI FLORIDA
CITY OF NORTH MIAMI
PUBLIC WORKS UTILITIES

WINSON WATER TREATMENT PLANT
BID PACKAGE 3: WTP REHABILITATION
GATE NO. 1

DATE: JUNE 2014
SHEET: 33 OF 335
DRAWING: C-16

PERMITTING

File = H:\44238-004\Drawings\Bid Package 3 – WTP Rehab\Civil\44238-004BP3-C16 Saved by HScalf1 Save date = 6/9/2014 7:55 PM

PLOT DATE: 6/10/2014 12:08 PM BY: HSCALF1

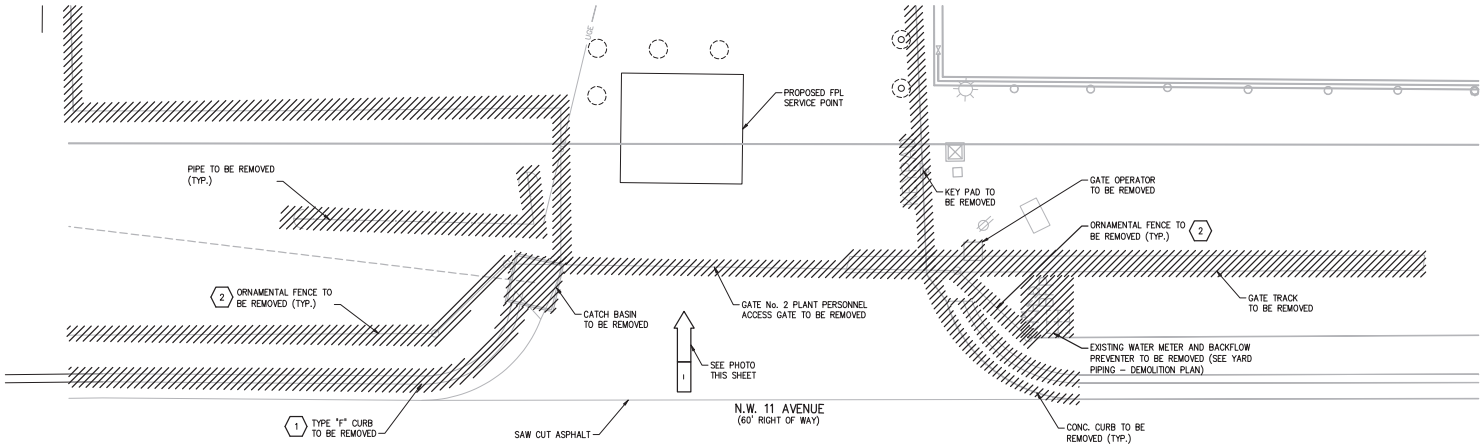

PLAN – EXISTING GATE NO .2

DETAIL 2 / G-16
1" = 5'-0"

PHOTO – EXISTING GATE NO. 2
NTS

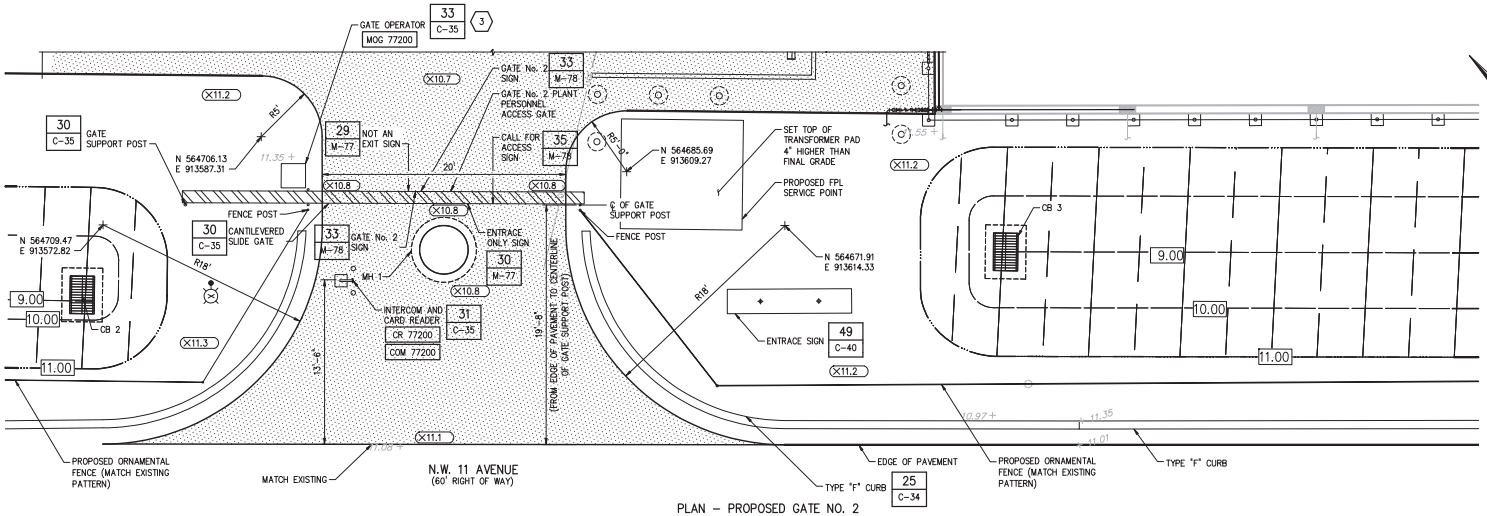

PLAN – PROPOSED GATE NO. 2

DETAIL 2 / C-14
1" = 5'-0"

KEYED NOTES:

1. REMOVE LENGTH OF EXISTING CURB AS REQUIRED TO CONSTRUCT THE PROPOSED IMPROVEMENTS.
2. REMOVE THE LENGTH OF EXISTING FENCE AS REQUIRED TO CONSTRUCT THE PROPOSED IMPROVEMENTS.
3. ALL MOTORIZED GATES SHALL BE PROVIDED WITH VEHICLE DETECTION LOOPS PER THE ELECTRICAL DRAWINGS.

LEGEND:

- EXISTING
- PROPOSED
- PROPOSED STORM WATER SWALE
- PROPOSED ASPHALT PAVEMENT
- TO BE REMOVED
- 10.00 PROPOSED CONTOUR
- ×11.25 PROPOSED SPOT ELEVATION
- ×11.25 EXISTING SPOT ELEVATION

1"=5'-0" 5 2.5 0 5'

NO.	DATE	ISSUED FOR	BY
1	4/1/14	100% QA COMMENTS	H.J.V.

DESIGNED G.A.B.
DRAWN L.M.S.
CHECKED J.N.M.
PROJ. ENGR. G.A.B.

H. J. VIDAL P.E.
No. 37882

HAZEN AND SAWYER
Environmental Engineers & Scientists
4000 Hollywood Boulevard, Suite 750N
Hollywood, Florida 33021
Certificate of Authorization Number: 2771

SCALE 1"=5'-0"

CLIENTS PROJECT: –
ENGINEERS PROJECT: 44238-004
CAD REFERENCE: 44238-004BP3-C17

NORTH MIAMI FLORIDA
CITY OF NORTH MIAMI
PUBLIC WORKS UTILITIES

WINSON WATER TREATMENT PLANT
BID PACKAGE 3: WTP REHABILITATION
GATE NO. 2

DATE: JUNE 2014
SHEET: 34 OF 335
DRAWING: C-17

PERMITTING

PLOT DATE: 6/10/2014 12:13 PM BY: HSCALI

File = H:\44238-004\Drawings\Bid Package 3 – WTP Rehab\Civil\44238-004BP3-C17 Saved by HsCali2 Save date = 6/9/2014 8:46 PM

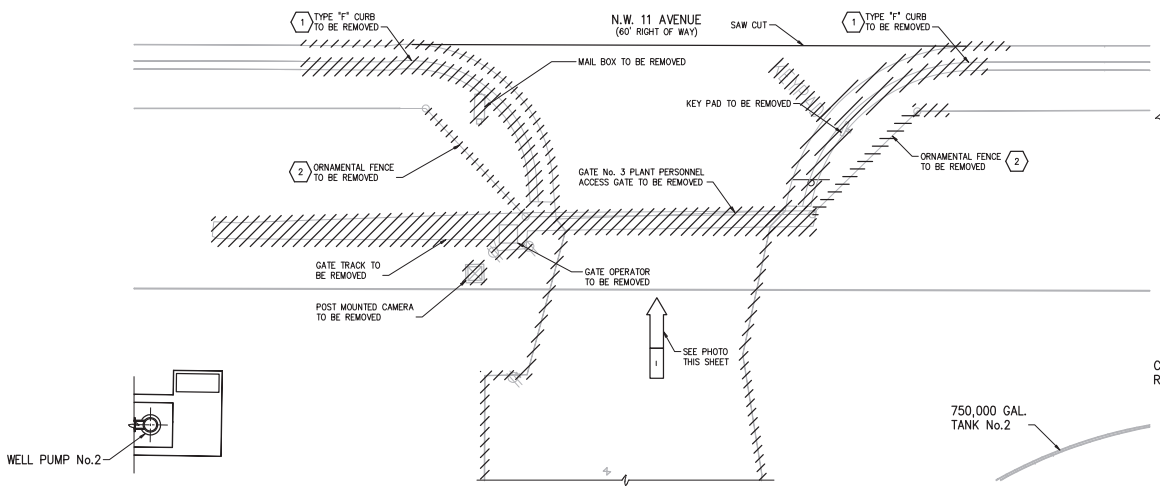

PLAN – EXISTING GATE NO. 3

DETAIL 3 / G-16
1" = 5'-0"

PHOTO – EXISTING GATE NO. 3
NTS

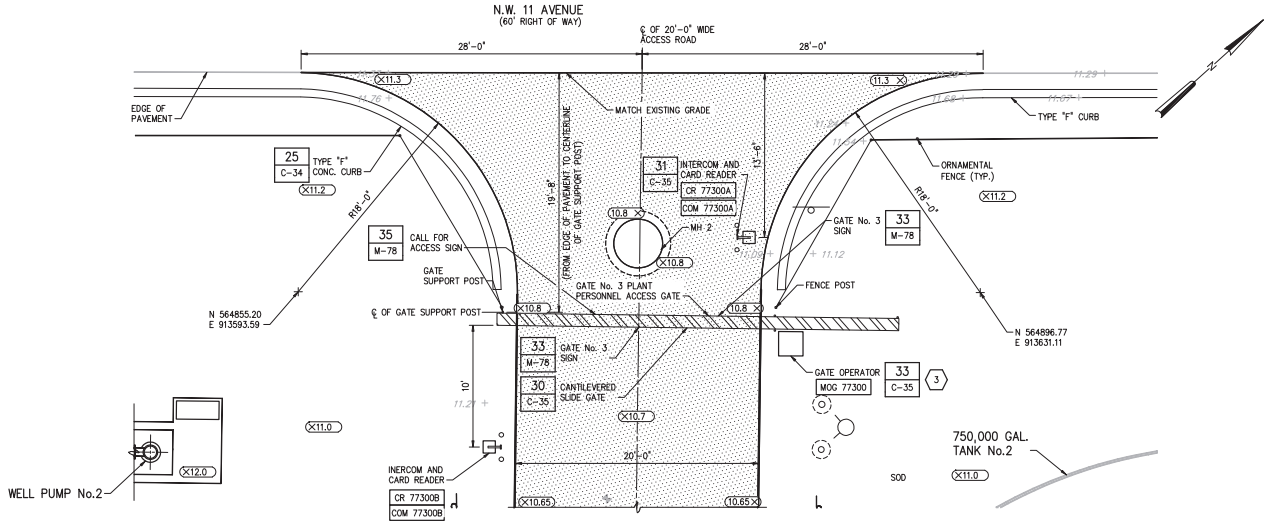

PLAN – PROPOSED GATE NO. 3

DETAIL 3 / C-14
1" = 5'-0"

KEYED NOTES:

1. REMOVE LENGTH OF EXISITNG CURB AS REQUIRED TO CONSTRUCT THE PROPOSED IMPROVEMENTS.
2. REMOVE THE LENGTH OF EXISTING FENCE AS REQUIRED TO CONSTRUCT THE PROPOSED IMPROVEMENTS.
3. ALL MOTORIZED GATES SHALL BE PROVIDED WITH VEHICLE DETECTION LOOPS PER THE ELECTRICAL DRAWINGS.

LEGEND:

- EXISTING
- PROPOSED
- PROPOSED STORM WATER SWALE
- PROPOSED PAVEMENT
- 10.00 PROPOSED CONTOUR
- 11.25 PROPOSED SPOT ELEVATION
- 11.25 EXISTING SPOT ELEVATION

1"=5'-0" 5 2.5 0 5'

NO.	DATE	ISSUED FOR	BY
1	4/1/14	100% QA COMMENTS	H.J.V.

DESIGNED G.A.B.
DRAWN G.P.B.
CHECKED J.N.M.
PROJ. ENGR. G.A.B.

H. J. VIDAL P.E.
No. 37882

HAZEN AND SAWYER
Environmental Engineers & Scientists
4000 Hollywood Boulevard, Suite 750N
Hollywood, Florida 33021
Certificate of Authorization Number: 2771

SCALE 1"=5'-0"

CLIENTS PROJECT: –
ENGINEERS PROJECT: 44238-004
CAD REFERENCE: 44238-004BP3-C18

NORTH MIAMI FLORIDA
CITY OF NORTH MIAMI
PUBLIC WORKS UTILITIES

WINSON WATER TREATMENT PLANT
BID PACKAGE 3: WTP REHABILITATION
GATE NO. 3

DATE: JUNE 2014
SHEET: 35 OF 335
DRAWING: C-18

PERMITTING

File = H:\44238-004\Drawings\Bid Package 3 – WTP Rehab\Civil\44238-004BP3-C18 Saved by HsCad2 Save date = 6/9/2014 8:25 PM

PLOT DATE: 6/10/2014 12:19 PM BY: HSCAD1

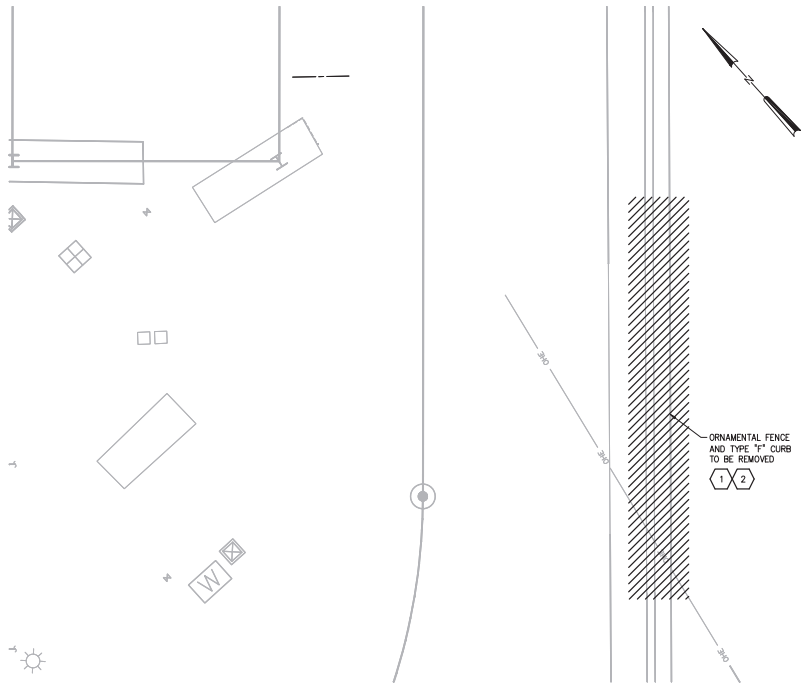

PLAN – EXISTING

DETAIL 4 / G-16
1" = 5'-0"

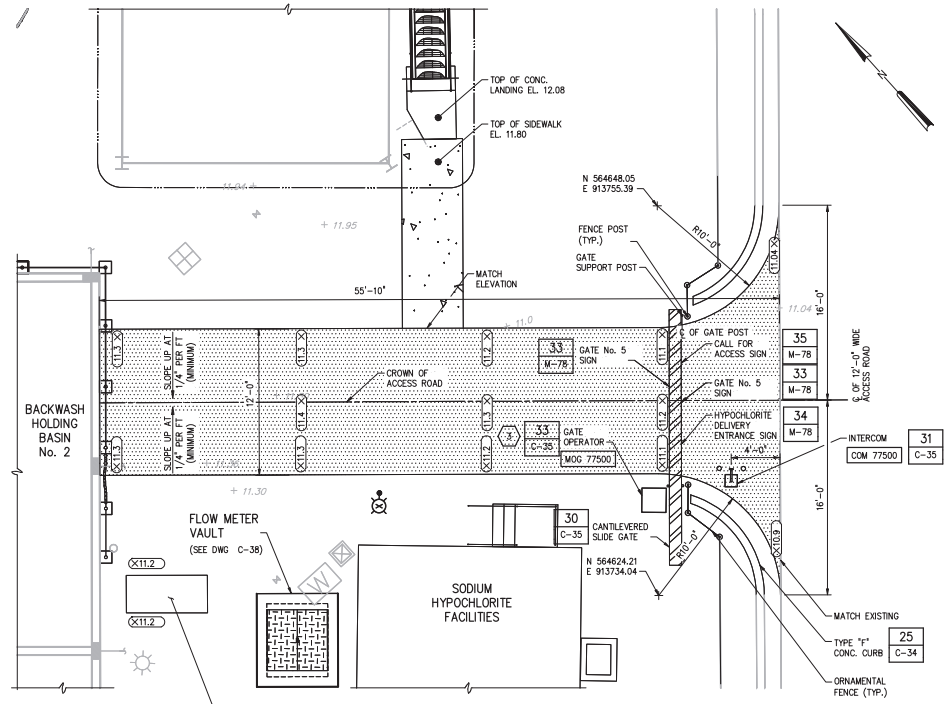

PLAN – PROPOSED GATE NO. 5

DETAIL 4 / C-14
1" = 5'-0"

KEYED NOTES:

1. REMOVE LENGTH OF EXISITNG CURB AS REQUIRED TO CONSTRUCT THE PROPOSED IMPROVEMENTS.
2. REMOVE THE LENGTH OF EXISTING FENCE AS REQUIRED TO CONSTRUCT THE PROPOSED IMPROVEMENTS.
3. ALL MOTORIZED GATES SHALL BE PROVIDED WITH VEHICLE DETECTION LOOPS PER THE ELECTRICAL DRAWINGS.

LEGEND:

- EXISTING
- PROPOSED
- PROPOSED STORM WATER SWALE
- PROPOSED ASPHALT PAVEMENT
- 10.00 PROPOSED CONTOUR
- ×11.25 PROPOSED SPOT ELEVATION
- ×11.25 EXISTING SPOT ELEVATION

1"=5'-0" 5 2.5 0 5'

NO.	DATE	ISSUED FOR	BY

DESIGNED G.A.B.
DRAWN G.P.B.
CHECKED J.N.M.
PROJ. ENGR. G.A.B.

H. J. VIDAL P.E.
No. 37882

HAZEN AND SAWYER
Environmental Engineers & Scientists
4000 Hollywood Boulevard, Suite 750N
Hollywood, Florida 33021
Certificate of Authorization Number: 2771

SCALE 1"=5'-0"

CLIENTS PROJECT: –
ENGINEERS PROJECT: 44238-004
CAD REFERENCE: 44238-004BP3-C19

NORTH MIAMI FLORIDA
CITY OF NORTH MIAMI
PUBLIC WORKS UTILITIES

WINSON WATER TREATMENT PLANT
BID PACKAGE 3: WTP REHABILITATION
GATE NO. 5

DATE: JUNE 2014
SHEET: 36 OF 335
DRAWING: C-19

PERMITTING

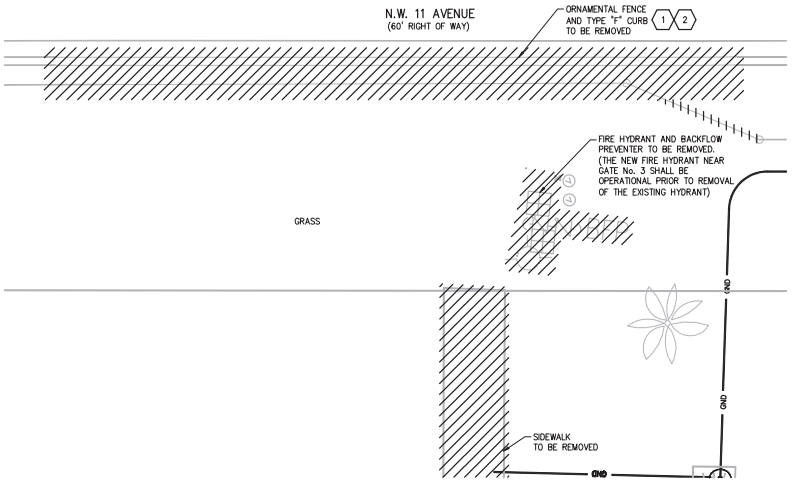

PLAN – EXISTING

DETAIL 5 / G-16
1"=5'-0"

PHOTO – NEAR PROPOSED GATE No 6

NTS

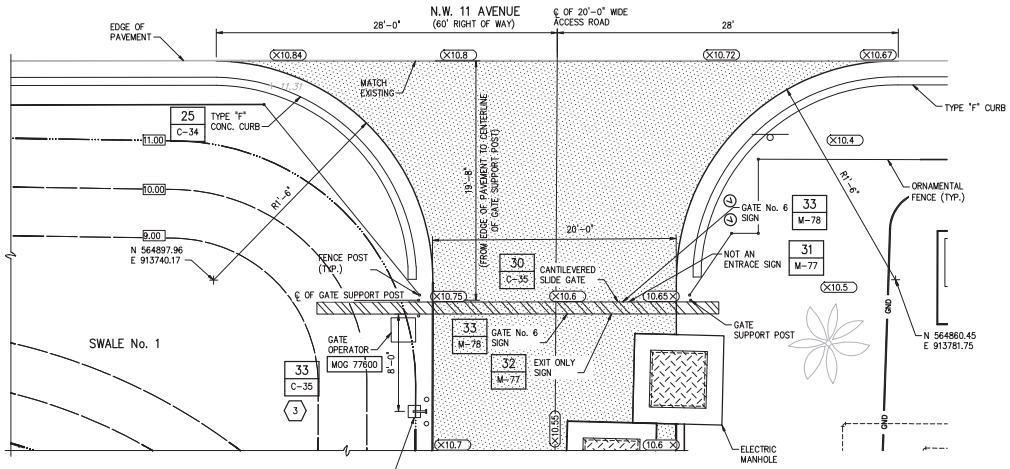

PLAN – PROPOSED GATE NO. 6

DETAIL 5 / C-14
1"=5'-0"

KEYED NOTES:

1. REMOVE LENGTH OF EXISTING CURB AS REQUIRED TO CONSTRUCT THE PROPOSED IMPROVEMENTS.
2. REMOVE THE LENGTH OF EXISTING FENCE AS REQUIRED TO CONSTRUCT THE PROPOSED IMPROVEMENTS.
3. ALL MOTORIZED GATES SHALL BE PROVIDED WITH VEHICLE DETECTION LOOPS PER THE ELECTRICAL DRAWINGS.

LEGEND:

- EXISTING
- PROPOSED
- PROPOSED STORM WATER SWALE
- PROPOSED ASPHALT PAVEMENT
- EXISITING VALVE BOX TO BE RESET AS REQUIRED TO MATCH PROPOSED GRADE
- 10.00 PROPOSED CONTOUR
- ×11.25 PROPOSED SPOT ELEVATION
- ×11.25 EXISTING SPOT ELEVATION

1"=5'-0" 5 2.5 0 5'

NO.	DATE	ISSUED FOR	BY

DESIGNED G.A.B.
DRAWN L.M.S.
CHECKED J.N.M.
PROJ. ENGR. G.A.B.

H. J. VIDAL P.E.
No. 37882

HAZEN AND SAWYER
Environmental Engineers & Scientists
4000 Hollywood Boulevard, Suite 750N
Hollywood, Florida 33021
Certificate of Authorization Number: 2771

SCALE 1"=5'-0"

CLIENTS PROJECT: –
ENGINEERS PROJECT: 44238-004
CAD REFERENCE: 44238-004BP3-C20

NORTH MIAMI FLORIDA
CITY OF NORTH MIAMI
PUBLIC WORKS UTILITIES

WINSON WATER TREATMENT PLANT
BID PACKAGE 3: WTP REHABILITATION
GATE NO. 6

DATE: JUNE 2014
SHEET: 37 OF 335
DRAWING: C-20

PERMITTING

PLOT DATE: 6/10/2014 12:30 PM BY: HSCAIT

File = H:\44238-004\Drawings\Bid Package 3 – WTP Rehab\Civil\44238-004BP3-C20 Saved by HScait Save date = 6/9/2014 8:08 PM

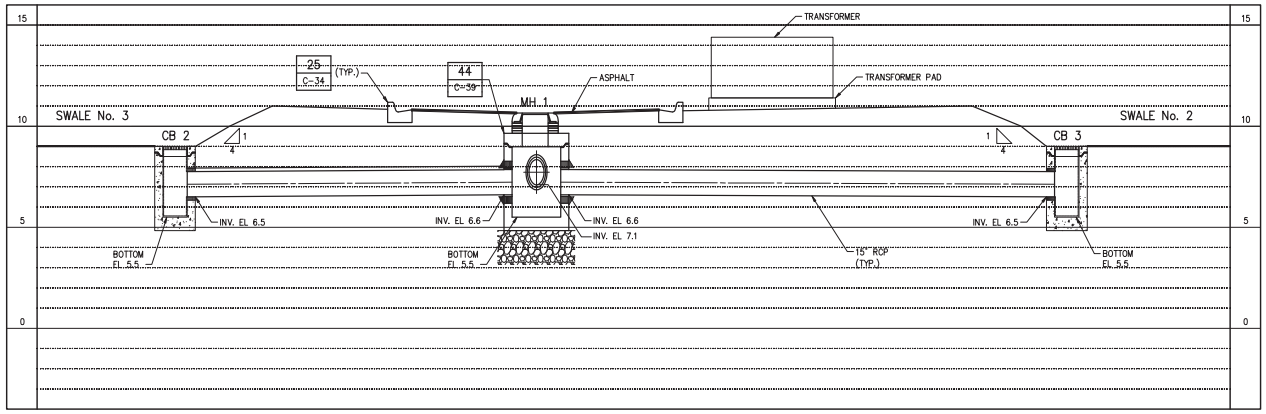

SECTION A / C-14
HORIZ 1"=5'-0"
VERT 1"=3'-0"

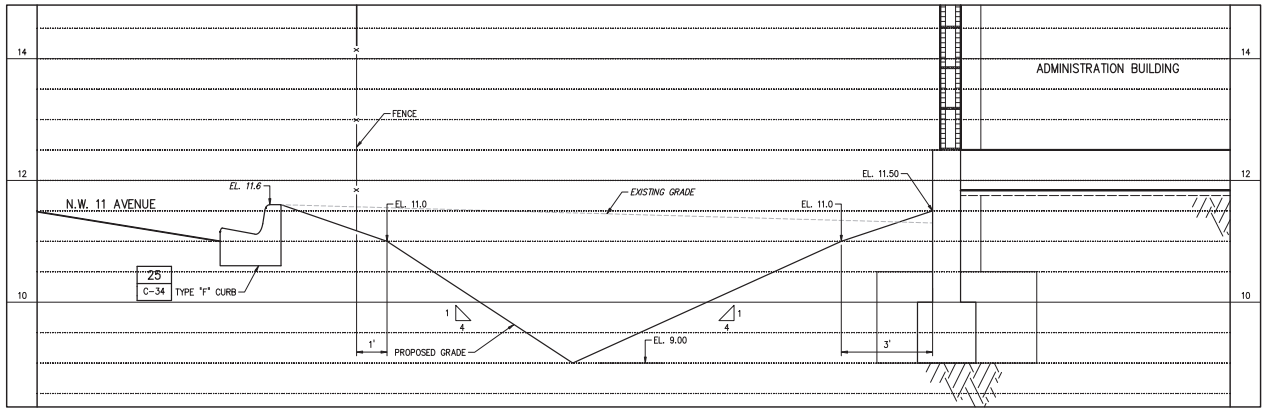

SECTION B / C-14
HORIZ 1"=2'-0"
VERT 1"=1'-0"

LEGEND:

EXISTING
PROPOSED

HORIZ 1"=5'-0" 5 2.5 0 5'
VERT 1"=3'-0" 3 2 1 0 3'
HORIZ 1"=2'-0" 2 1 0 2'
VERT 1"=1'-0" 12" 6 0 1'

Szauer Engineering
Civil Engineers
7050 W. Palmetto Park Road, No. 15399
Boca Raton, FL 33433
Certificate of Authorization Number 30129

PLOT DATE: 6/10/2014 3:26 PM BY: HS

NO.	DATE	ISSUED FOR	BY

DESIGNED G.A.B.
DRAWN G.P.B.
CHECKED J.N.M.
PROJ. ENGR. G.A.B.

JORGE M. SZAUER P.E.
No. 62579

HAZEN AND SAWYER
Environmental Engineers & Scientists
4000 Hollywood Boulevard, Suite 750N
Hollywood, Florida 33021
Certificate of Authorization Number: 2771

SCALE: AS NOTED

CLIENTS PROJECT: –
ENGINEERS PROJECT: 44238-004
CAD REFERENCE: 44238-004BP3-C21

NORTH MIAMI FLORIDA
CITY OF NORTH MIAMI
PUBLIC WORKS UTILITIES

WINSON WATER TREATMENT PLANT
BID PACKAGE 3: WTP REHABILITATION

PAVING, GRADING & DRAINAGE
SECTIONS – SHEET 1

DATE: JUNE 2014
SHEET: 38 OF 335
DRAWING: C-21

PERMITTING

File = H:\44238-004\Drawings\Bid Package 3 – WTP Rehab\Civil\44238-004BP3-C21 Saved by HS Save date = 6/9/2014 6:46 PM

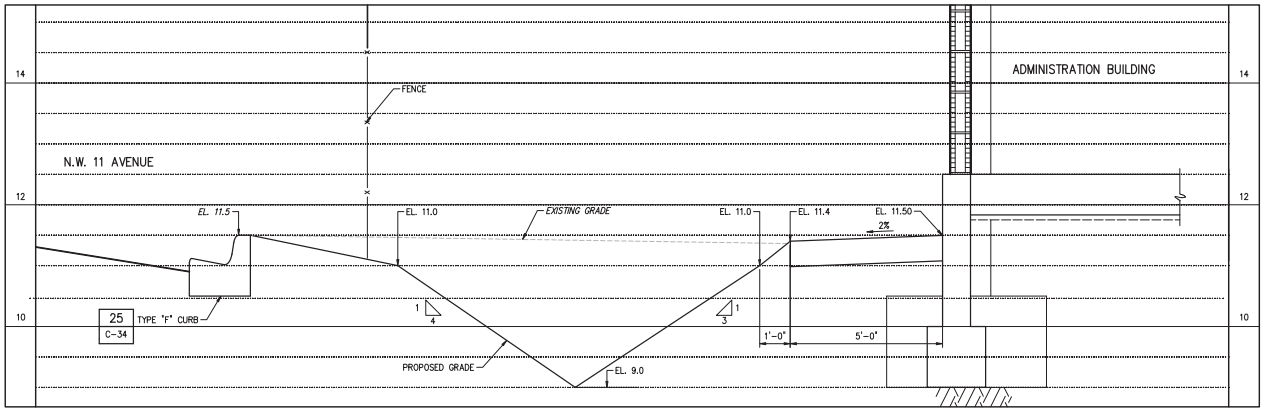

SECTION C / C-14
HORIZ 1"=2'-0"
VERT 1"=1'-0"

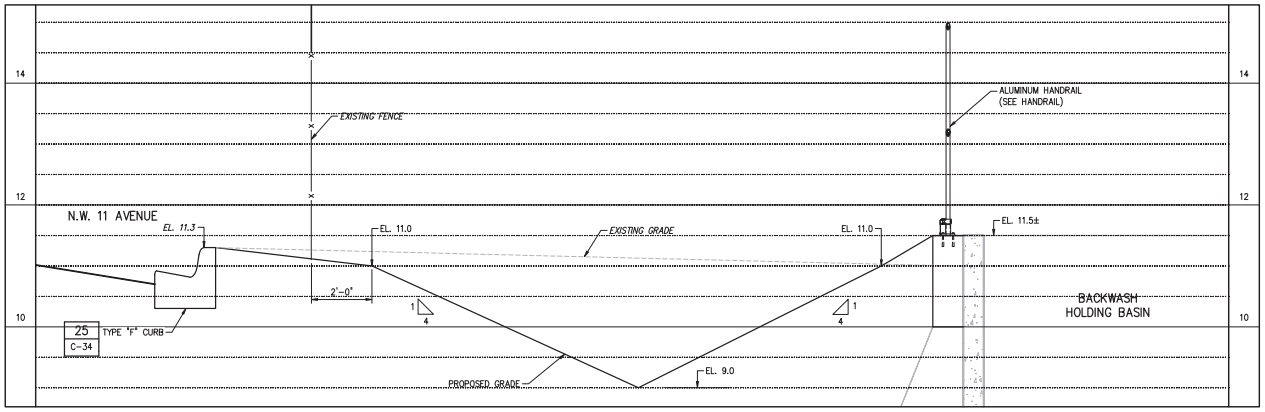

SECTION D / C-14
HORIZ 1"=2'-0"
VERT 1"=1'-0"

HORIZ 1"=2'-0" 2 1 0 2'
VERT 1"=1'-0" 12" 6 0 1'

Szauer Engineering
Civil Engineers
7050 W. Palmetto Park Road, No. 15399
Boca Raton, FL 33433
Certificate of Authorization Number 30129

NO.	DATE	ISSUED FOR	BY

DESIGNED G.A.B.
DRAWN G.P.B.
CHECKED J.N.M.
PROJ. ENGR. G.A.B.

JORGE M. SZAUER P.E.
No. 62579

HAZEN AND SAWYER
Environmental Engineers & Scientists
4000 Hollywood Boulevard, Suite 750N
Hollywood, Florida 33021
Certificate of Authorization Number: 2771

SCALE: AS NOTED

CLIENTS PROJECT: –
ENGINEERS PROJECT: 44238-004
CAD REFERENCE: 44238-004BP3-C22

NORTH MIAMI FLORIDA
CITY OF NORTH MIAMI
PUBLIC WORKS UTILITIES

WINSON WATER TREATMENT PLANT
BID PACKAGE 3: WTP REHABILITATION

PAVING, GRADING & DRAINAGE
SECTIONS – SHEET 2

DATE: JUNE 2014
SHEET: 39 OF 335
DRAWING: C-22

PERMITTING

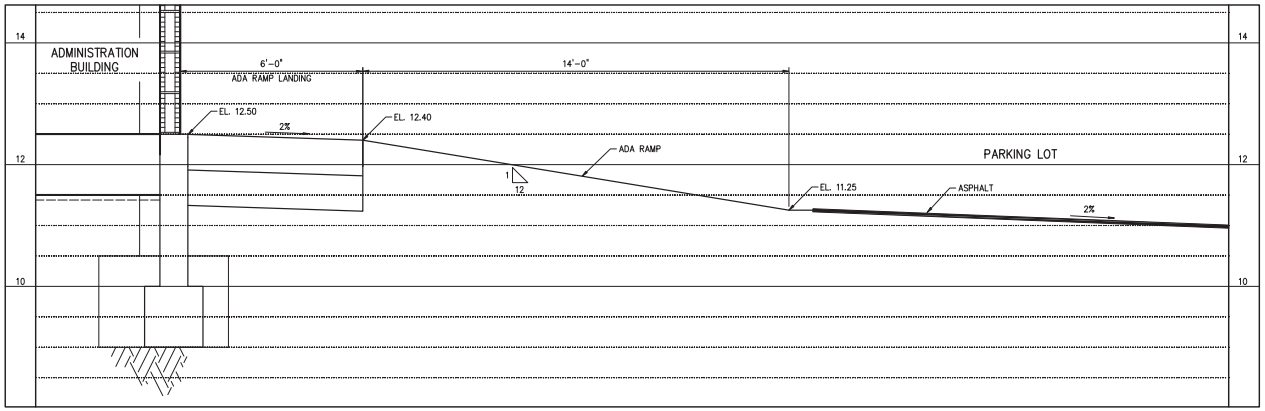

SECTION E / C-14
HORIZ 1"=2'-0"
VERT 1"=1'-0"

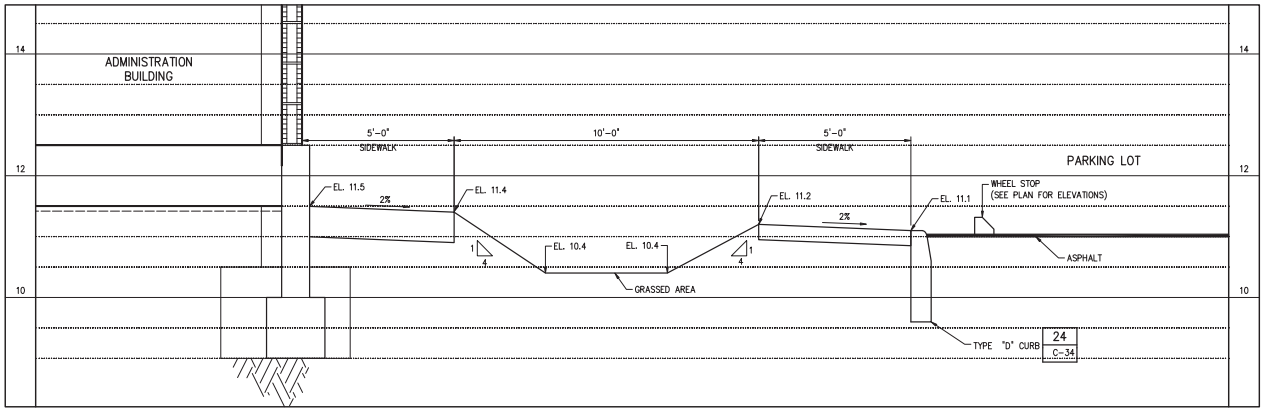

SECTION F / C-14
HORIZ 1"=2'-0"
VERT 1"=1'-0"

HORIZ 1"=2'-0" 2 1 0 2'
VERT 1"=1'-0" 12" 6 0 1'

Szauer Engineering
Civil Engineers
7050 W. Palmetto Park Road, No. 15399
Boca Raton, FL 33433
Certificate of Authorization Number 30129

NO.	DATE	ISSUED FOR	BY

DESIGNED G.A.B.
DRAWN G.P.B.
CHECKED J.N.M.
PROJ. ENGR. G.A.B.

JORGE M. SZAUER P.E.
No. 62579

HAZEN AND SAWYER
Environmental Engineers & Scientists
4000 Hollywood Boulevard, Suite 750N
Hollywood, Florida 33021
Certificate of Authorization Number: 2771

SCALE: AS NOTED

CLIENTS PROJECT: –
ENGINEERS PROJECT: 44238-004
CAD REFERENCE: 44238-004BP3-C23

NORTH MIAMI FLORIDA
CITY OF NORTH MIAMI
PUBLIC WORKS UTILITIES

WINSON WATER TREATMENT PLANT
BID PACKAGE 3: WTP REHABILITATION

PAVING, GRADING & DRAINAGE
SECTIONS – SHEET 3

DATE: JUNE 2014
SHEET: 40 OF 335
DRAWING: C-23

PERMITTING

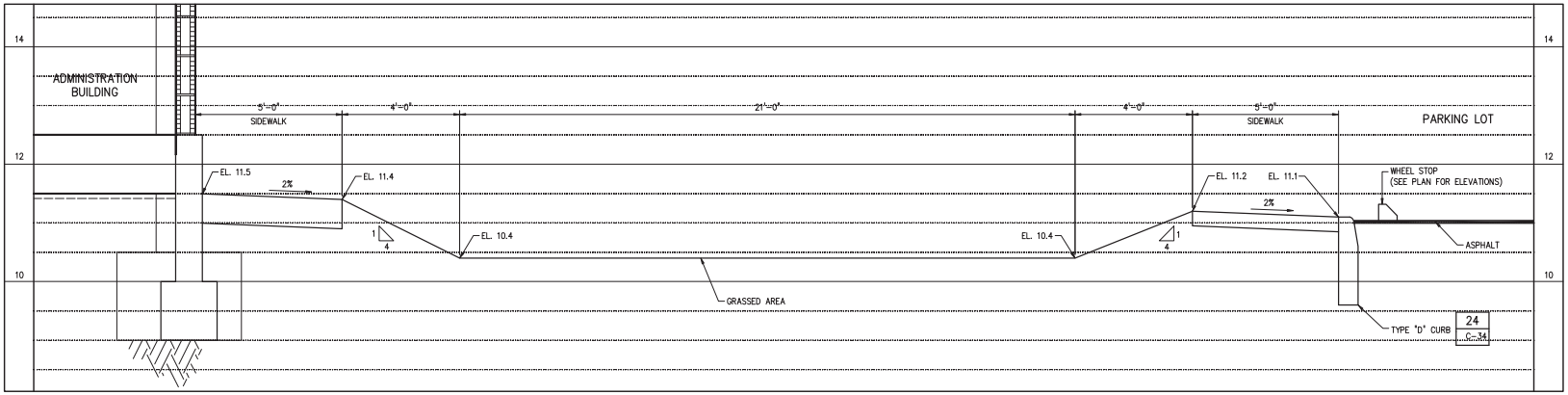

SECTION G / C-14
HORIZ 1"=2'-0"
VERT 1"=1'-0"

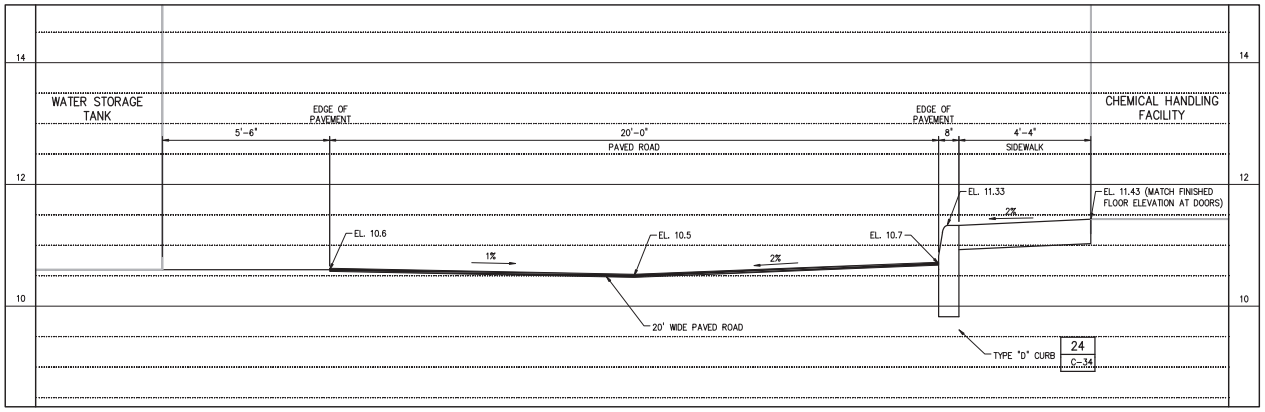

SECTION H / C-14
HORIZ 1"=2'-0"
VERT 1"=1'-0"

HORIZ 1"=2'-0" 2 1 0 2'
VERT 1"=1'-0" 12" 6 0 1'

Szauer Engineering
Civil Engineers
7050 W. Palmetto Park Road, No. 15399
Boca Raton, FL 33433
Certificate of Authorization Number 30129

NO.	DATE	ISSUED FOR	BY

DESIGNED G.A.B.
DRAWN G.P.B.
CHECKED J.N.M.
PROJ. ENGR. G.A.B.

JORGE M. SZAUER P.E.
No. 62579

HAZEN AND SAWYER
Environmental Engineers & Scientists
4000 Hollywood Boulevard, Suite 750N
Hollywood, Florida 33021
Certificate of Authorization Number: 2771

SCALE: AS NOTED

CLIENTS PROJECT: –
ENGINEERS PROJECT: 44238-004
CAD REFERENCE: 44238-004BP3-C24

NORTH MIAMI FLORIDA
CITY OF NORTH MIAMI
PUBLIC WORKS UTILITIES

WINSON WATER TREATMENT PLANT
BID PACKAGE 3: WTP REHABILITATION

PAVING, GRADING & DRAINAGE
SECTIONS – SHEET 4

DATE: JUNE 2014
SHEET: 41 OF 335
DRAWING: C-24

PERMITTING

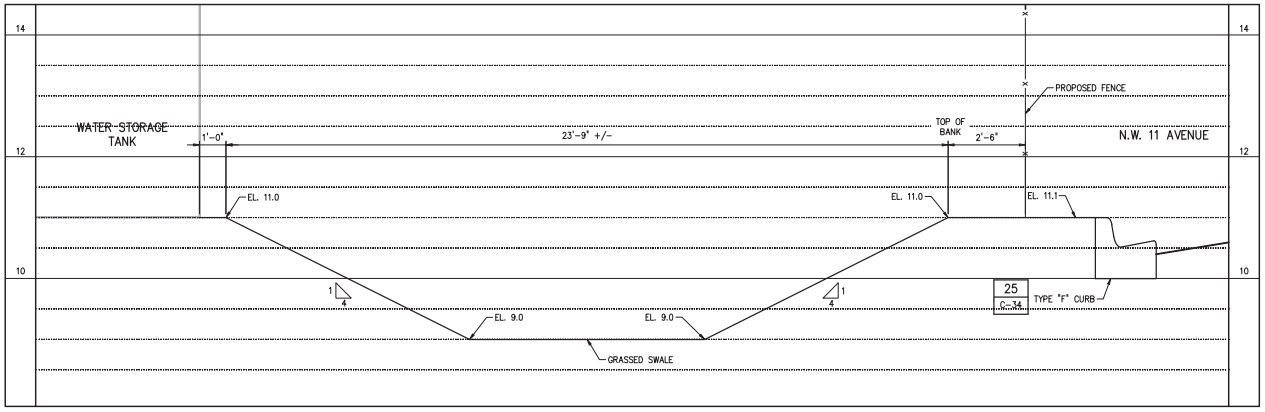

SECTION I / C-14
HORIZ 1"=2'-0"
VERT 1"=1'-0"

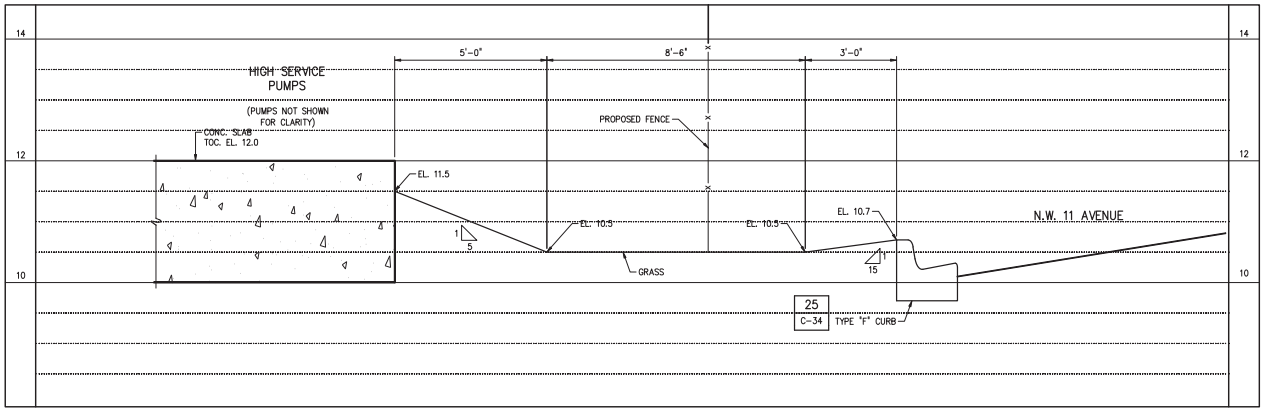

SECTION J / C-14
HORIZ 1"=2'-0"
VERT 1"=1'-0"

HORIZ 1"=2'-0" 2 1 0 2'

VERT 1"=1'-0" 12" 6 0 1'

Szauer Engineering
Civil Engineers
7050 W. Palmetto Park Road, No. 15399
Boca Raton, FL 33433
Certificate of Authorization Number 30129

NO.	DATE	ISSUED FOR	BY

DESIGNED G.A.B.
DRAWN G.P.B.
CHECKED J.N.M.
PROJ. ENGR. G.A.B.

JORGE M. SZAUER P.E.
No. 62579

HAZEN AND SAWYER
Environmental Engineers & Scientists
4000 Hollywood Boulevard, Suite 750N
Hollywood, Florida 33021
Certificate of Authorization Number: 2771

SCALE: AS NOTED

CLIENTS PROJECT: –
ENGINEERS PROJECT: 44238-004
CAD REFERENCE: 44238-004BP3-C25

CITY OF NORTH MIAMI
PUBLIC WORKS UTILITIES

WINSON WATER TREATMENT PLANT
BID PACKAGE 3: WTP REHABILITATION

PAVING, GRADING & DRAINAGE
SECTIONS – SHEET 5

DATE: JUNE 2014
SHEET: 42 OF 335
DRAWING: C-25

PERMITTING

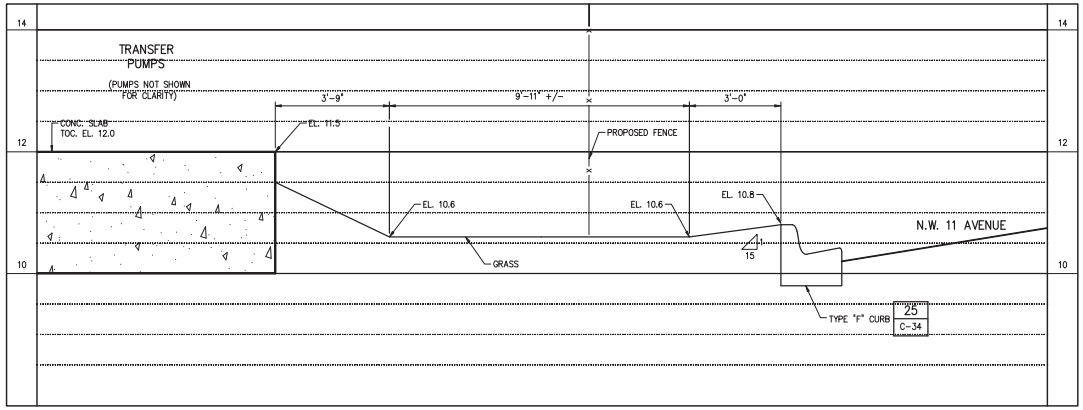

SECTION K / C-14
HORIZ 1"=2'-0"
VERT 1"=1'-0"

Szauer Engineering
Civil Engineers
7050 W. Palmetto Park Road, No. 15399
Boca Raton, FL 33433
Certificate of Authorization Number 30129

HORIZ 1"=2'-0" 2 1 0 2'
VERT 1"=1'-0" 12" 6 0 1'

PLOT DATE: 6/10/2014 3:47 PM BY: HS

NO.	DATE	ISSUED FOR	BY

DESIGNED G.A.B.
DRAWN G.P.B.
CHECKED J.N.M.
PROJ. ENGR. G.A.B.

JORGE M. SZAUER P.E.
No. 62579

HAZEN AND SAWYER
Environmental Engineers & Scientists
4000 Hollywood Boulevard, Suite 750N
Hollywood, Florida 33021
Certificate of Authorization Number: 2771

SCALE: AS NOTED

CLIENTS PROJECT: –
ENGINEERS PROJECT: 44238-004
CAD REFERENCE: 44238-004BP3-C26

NORTH MIAMI FLORIDA
CITY OF NORTH MIAMI
PUBLIC WORKS UTILITIES

WINSON WATER TREATMENT PLANT
BID PACKAGE 3: WTP REHABILITATION
PAVING, GRADING & DRAINAGE SECTIONS – SHEET 6

DATE: JUNE 2014
SHEET: 43 OF 335
DRAWING: C-26

PERMITTING

File = H:\44238-004\Drawings\Bid Package 3 – WTP Rehab\Civil\44238-004BP3-C26 Saved by HsCol2 Save date = 6/9/2014 8:11 PM

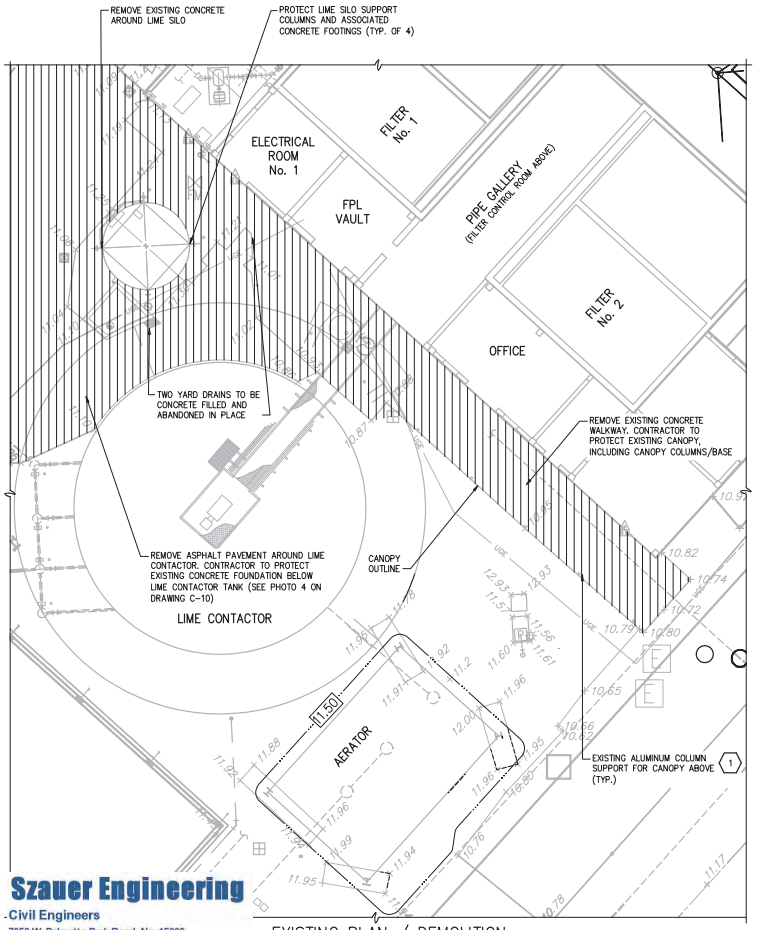

EXISTING PLAN / DEMOLITION
1"=10'-0"

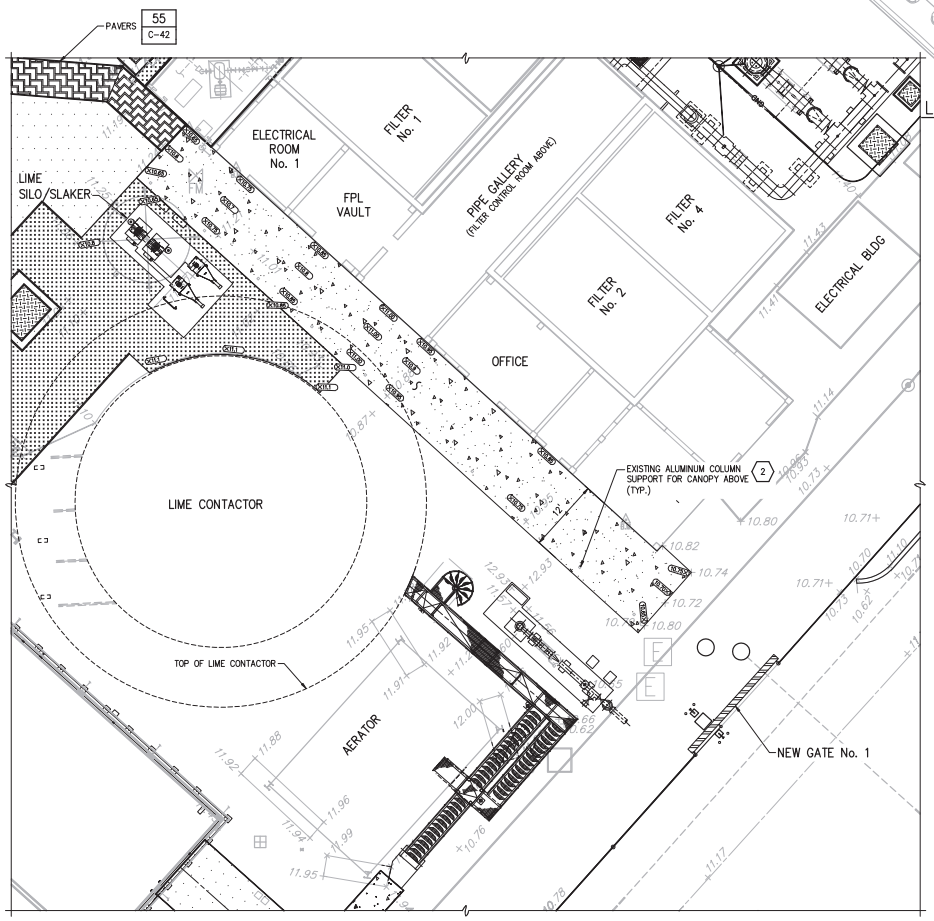

PROPOSED PLAN
1"=10'-0"

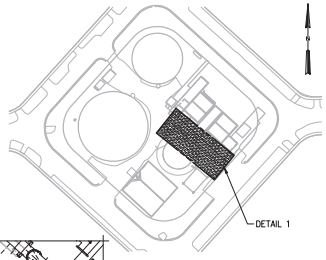

LOCATION MAP

KEYED NOTES:

1. PROJECT CANOPY SUPPORT COLUMNS.
2. REMOVE AND REPLACE RAIN LEADERS UP TO EXISTING GUTTER, REPLACE IN KIND. EXISTING GUTTER TO REMAIN. SEE PHOTO 3 ON DRAWING C-10 FOR PHOTO OF AN EXISTING LEADER.

LEGEND:

- WORK COMPLETED IN PHASE-I, II, III AND IV
- EXISTING
- PROPOSED
- TO BE REMOVED
- PROPOSED STORM WATER SWALE
- PROPOSED ASPHALT PAVEMENT
- PROPOSED SIDEWALK
- PROPOSED SOD
- PROPOSED CONCRETE PAVEMENT

DETAIL 1 / 1"=10'-0"

1"=10'-0"

10 5 0 10'

Szauer Engineering
Civil Engineers
7050 W. Palmetto Park Road, No. 15399
Boca Raton, FL 33433
Certificate of Authorization Number 30129

NO.	DATE	ISSUED FOR	BY

DESIGNED G.A.B.
DRAWN G.P.B.
CHECKED J.N.M.
PROJ. ENGR. G.A.B.

JORGE M. SZAUER P.E.
No. 62579

HAZEN AND SAWYER
Environmental Engineers & Scientists
4000 Hollywood Boulevard, Suite 750N
Hollywood, Florida 33021
Certificate of Authorization Number: 2771

SCALE 1"=10'-0"

CLIENTS PROJECT: –
ENGINEERS PROJECT: 44238-004
CAD REFERENCE: 44238-004BP3-C27

NORTH MIAMI FLORIDA
CITY OF NORTH MIAMI
PUBLIC WORKS UTILITIES

WINSON WATER TREATMENT PLANT
BID PACKAGE 3: WTP REHABILITATION

BREEZEWAY PLANS AND DETAILS

DATE: JUNE 2014
SHEET: 44 OF 335
DRAWING: C-27

PERMITTING

PLOT DATE: 6/10/2014 3:52 PM BY: HS

File = H:\44238-004\Drawings\Bid Package 3 - WTP Rehab\Civil\44238-004BP3-C27 Saved by HScalil Save date = 6/9/2014 5:16 PM

WATER MAIN SEPARATION IN ACCORDANCE WITH F.A.C. RULE 62-555.314

OTHER PIPE	HORIZONTAL SEPARATION	CROSSINGS (NOTE 1)	JOINT SPACING @ CROSSINGS (FULL JOINT CENTERED)
STORM SEWER, STORM WATER FORCE MAIN, RECLAIMED WATER (NOTE 2)	WATER MAIN; 3 FT. MINIMUM	12 INCHES IS THE MINIMUM, EXCEPT FOR STORM SEWER, THEN 6 INCHES IS THE MINIMUM AND 12 INCHES IS PREFERRED	ALTERNATE 3 FT. MINIMUM; WATER MAIN
VACUUM SANITARY SEWER	WATER MAIN; 10 FT. PREFERRED 3 FT. MINIMUM	WATER MAIN; 12 INCHES PREFERRED 6 INCHES MINIMUM	ALTERNATE 3 FT. MINIMUM; WATER MAIN
GRAVITY SANITARY SEWER, (NOTE 3) SANITARY SEWER FORCE MAIN, RECLAIMED WATER	WATER MAIN; 10 FT. PREFERRED 6 FT. MINIMUM	WATER MAIN; 12 INCHES IS THE MINIMUM, EXCEPT FOR GRAVITY SEWER, THEN 6 INCHES IS THE MINIMUM AND 12 INCHES IS PREFERRED	ALTERNATE 6 FT. MINIMUM; WATER MAIN
ON-SITE SEWAGE TREATMENT & DISPOSAL SYSTEM	10 FT. MINIMUM	—	—

NOTES:

1. WATER MAIN SHOULD CROSS ABOVE OTHER PIPE. WHEN WATER MAIN MUST BE BELOW OTHER PIPE, THE MINIMUM SEPARATION IS 12 INCHES.
2. RECLAIMED WATER REGULATED UNDER PART III OF CHAPTER 62-610, F.A.C.
3. 3 FT. FOR GRAVITY SANITARY SEWER WHERE THE BOTTOM OF THE WATER MAIN IS LAID AT LEAST 6 INCHES ABOVE THE TOP OF THE GRAVITY SANITARY SEWER.

WATER MAIN SEPERATION

DETAIL 1 — NTS C-03

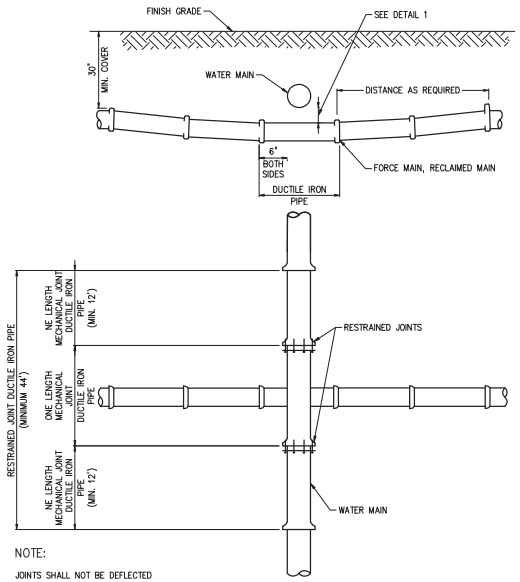

NOTE:

JOINTS SHALL NOT BE DEFLECTED MORE THAN 50% OF MANUFACTURER'S RECOMMENDED DEFLECTION

STANDARD UTILITY CROSSING

DETAIL 2 — NTS –

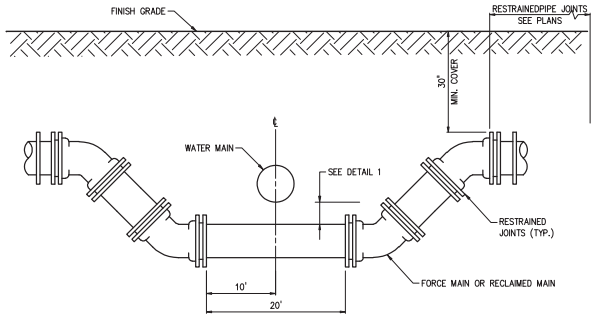

NOTE:

WHEREVER POSSIBLE DEFLECTION OF THE PIPE PER DETAIL 2 SHALL BE USED TO AVOID EXISTING OBSTRUCTIONS. THIS DETAIL SHALL BE USED ONLY WHEN APPROVED BY ENGINEER.

FITTING TYPE UTILITY CROSSING

DETAIL 3 — NTS –

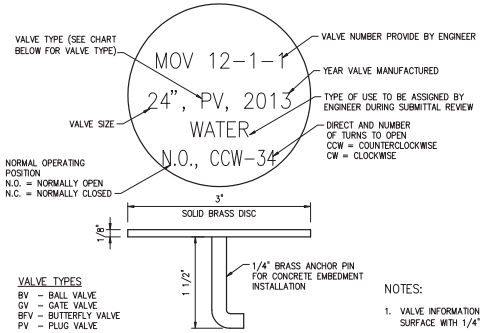

VALVE TYPES

BV – BALL VALVE
GV – GATE VALVE
BFV – BUTTERFLY VALVE
PV – PLUG VALVE

NOTES:

1. VALVE INFORMATION TO BE ENGRAVED INTO TOP SURFACE WITH 1/4" CAPITAL LETTERS.
2. ENTIRE MARKER TO BE COATED WITH CLEAR EPOXY TO PREVENT TARNISHING.
3. MARKERS SHALL BE MANUFACTURED BY WAGCO MARKERS, OR APPROVED EQUAL.

VALVE IDENTIFICATION MARKER

DETAIL 4 — NTS –

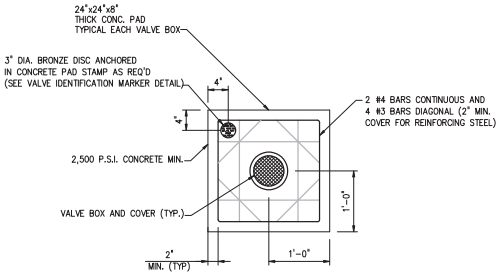

VALVE BOX

DETAIL 5 — NTS –

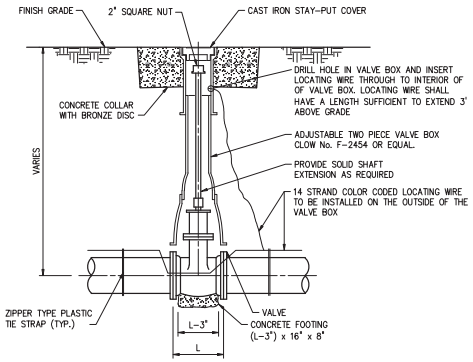

VALVE BOX

DETAIL 6 — NTS –

NO.	DATE	ISSUED FOR	BY

DESIGNED G.A.B.
DRAWN G.P.B.
CHECKED G.N.C.
PROJ. ENGR. G.A.B.

H. J. VIDAL P.E. No. 37882

HAZEN AND SAWYER
Environmental Engineers & Scientists
4000 Hollywood Boulevard, Suite 750N
Hollywood, Florida 33021
Certificate of Authorization Number: 2771

SCALE NTS

CLIENTS PROJECT: –
ENGINEERS PROJECT: 44238-004
CAD REFERENCE: 44238-004BP3-C28

NORTH MIAMI FLORIDA — CITY OF NORTH MIAMI PUBLIC WORKS UTILITIES

WINSON WATER TREATMENT PLANT
BID PACKAGE 3: WTP REHABILITATION
CIVIL DETAILS SHEET 1

DATE: JUNE 2014
SHEET: 45 OF 335
DRAWING: C-28

PERMITTING

PLOT DATE: 6/10/2014 3:56 PM BY: HS
XREFs= ..\Tblock\44238-004-BP3-TB
File = H:\44238-004\Drawings\Bid Package 3 - WTP Rehab\Civil\44238-004BP3-C28 Saved by HsCad2 Save date = 6/9/2014 8:02 PM

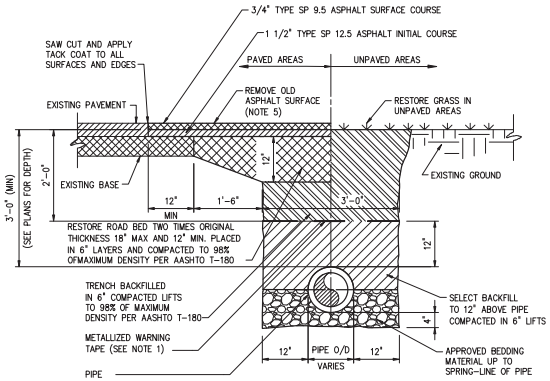

NOTES:

1. METALLIZED WARNING TAPES SHALL BE INSTALLED 24" BELOW FINISH GRADE CENTERED ABOVE THE PIPE.
2. SELECTED BACKFILL MATERIAL SHALL BE FREE OF STONES LARGER THAN 3/4" DIA.
3. REPLACE ALL LANE MARKINGS AND REFLECTIVE MARKERS.
4. DEPTH OF PIPE VARIES. SEE PIPING PLANS FOR PROPOSED DEPTHS. MINIMUM DEPTH OF COVER SHALL BE 36 INCHES.
5. EXISTING ASPHALT THICKNESS IS ESTIMATED TO AVERAGE 2-INCHES (RACING FROM 1-INCH TO 3-INCHES). THE CONTRACTOR SHALL REMOVE EXISTING ASPHALT TO EXPOSE LIMEROCK BASE PRIOR TO INSTALLATION OF PROPOSED ASPHALT. SOME REMOVAL OF EXISTING LIMEROCK BASE AND/OR SUBGRADE MAY BE REQUIRED TO CONSTRUCT THE PROPOSED PAVEMENT.

TYPICAL TRENCH AND PAVEMENT RESTORATION

DETAIL 7
NTS –

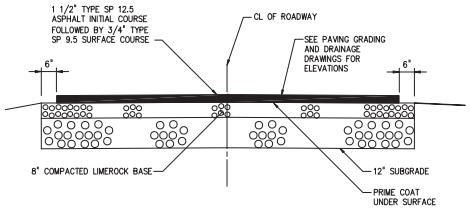

NOTES:

1. REFERENCE SEQUENCING RESTRICTIONS BETWEEN PLACEMENT OF INITIAL AND SURFACE COURSES AS NOTED ON THE STAGING PLANS.

TYPICAL PAVEMENT DETAIL

DETAIL 8
NTS –

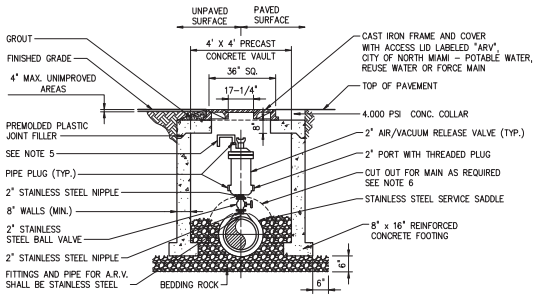

NOTES:

1. ADOBE DETAIL IS BASED ON 2" COMBINATION AIR/VACUUM RELEASE VALVE, CHANGE PIPE AND FITTINGS ACCORDINGLY FOR OTHER VALVE SIZES AND TYPES. VALVE SIZES TO BE DETERMINED BY THE ENGINEER AND APPROVED BY THE CITY PRIOR TO INSTALLATION.
2. THE BOTTOM OF THE PRECAST VAULT SHALL BE PLACED AT THE SAME ELEVATION AS THE BOTTOM OF THE PIPE.
3. ARV VAULT WALLS TO BE COATED INSIDE AND OUTSIDE WITH 16 MIL. THK. APPROVED ASPHALTIC COATING.
4. LIFT HOLES ARE TO BE SEALED WITH MORTAR INSIDE AND OUTSIDE AFTER INSTALLATION. ALL OPENINGS SHALL BE SEALED WITH WATERPROOF, EXPANDING GROUT.
5. WASTEWATER VALVES TO BE EQUIPPED WITH THREADED VENT PIPE THAT DIRECTS VENT DOWNWARD.
6. VAULT SHALL NOT REST ON PIPE. ALLOW 9"MIN. SEPARATION.
7. WHEN USED ON A FORCE MAIN ALL FITTING SHALL BE STAINLESS STEEL.

AIR RELEASE VALVE

DETAIL 9
NTS –

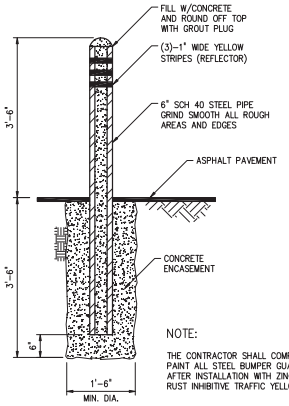

NOTE:

THE CONTRACTOR SHALL COMPLETELY PAINT ALL STEEL BUMPER GUARD POSTS AFTER INSTALLATION WITH ZINC-RICH RUST INHIBITIVE TRAFFIC YELLOW PAINT.

BOLLARD

DETAIL 10
NTS –

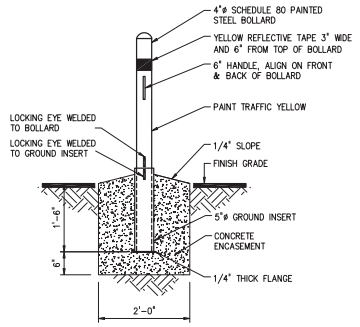

REMOVABLE BOLLARD

DETAIL 11
NTS –

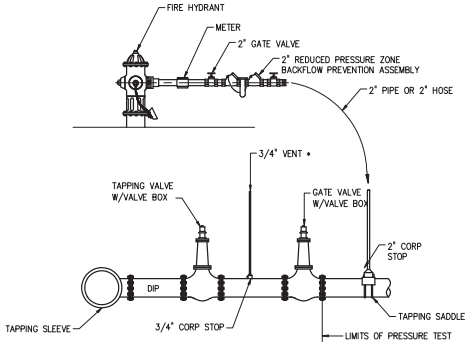

NOTES:

1. AFTER TESTS REMOVE 3/4" TUBING AND 2" GALVANIZED PIPE AND INSTALL PLUGS ON CORPORATION STOPS.

TAPPING AND FILLING CONNECTION

DETAIL 12
NTS –

NO.	DATE	ISSUED FOR	BY

PLOT DATE: 6/10/2014 3:59 PM BY: MS

XREFs= ..\block\44238-004-BP3-TB

DESIGNED G.A.B.
DRAWN L.M.S.
CHECKED G.N.C.
PROJ. ENGR. G.A.B.

H. J. VIDAL P.E.
No. 37882

HAZEN AND SAWYER
Environmental Engineers & Scientists
4000 Hollywood Boulevard, Suite 750N
Hollywood, Florida 33021
Certificate of Authorization Number: 2771

SCALE NTS

CLIENTS PROJECT: –
ENGINEERS PROJECT: 44238-004
CAD REFERENCE: 44238-004BP3-C29

NORTH MIAMI FLORIDA
CITY OF NORTH MIAMI
PUBLIC WORKS UTILITIES

WINSON WATER TREATMENT PLANT
BID PACKAGE 3: WTP REHABILITATION

CIVIL DETAILS
SHEET 2

DATE: JUNE 2014
SHEET: 46 OF 335
DRAWING: C-29

PERMITTING

File = H:\44238-004\Drawings\Bid Package 3 - WTP Rehab\Civil\44238-004BP3-C29 Saved by HsCad2 Save date = 6/9/2014 6:33 PM

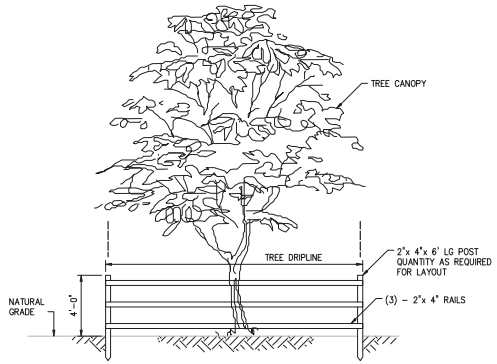

NOTE:

EXISTING TREES TO REMAIN PER TREE REMOVAL PLAN (SHEET G-09) AND THE MECHANICAL YARD PIPING PLANS DIRECTLY ADJACENT (I.E. WITHIN 10 FEET) OF WORK AREA SHALL RECEIVE TEMPORARY TREE PROJECTION BARRIERS PER THIS DETAIL AND AS NOTED IN DIVISION OF THE SPECIFICATIONS.

TEMPORARY TREE PROTECTION BARRIER

DETAIL 13
NTS –

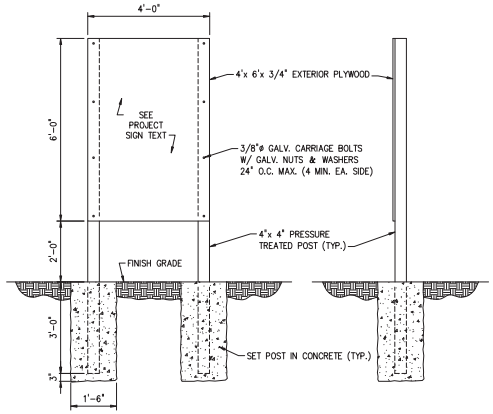

FRONT VIEW SIDE VIEW

PROJECT SIGN

DETAIL 14
NTS –

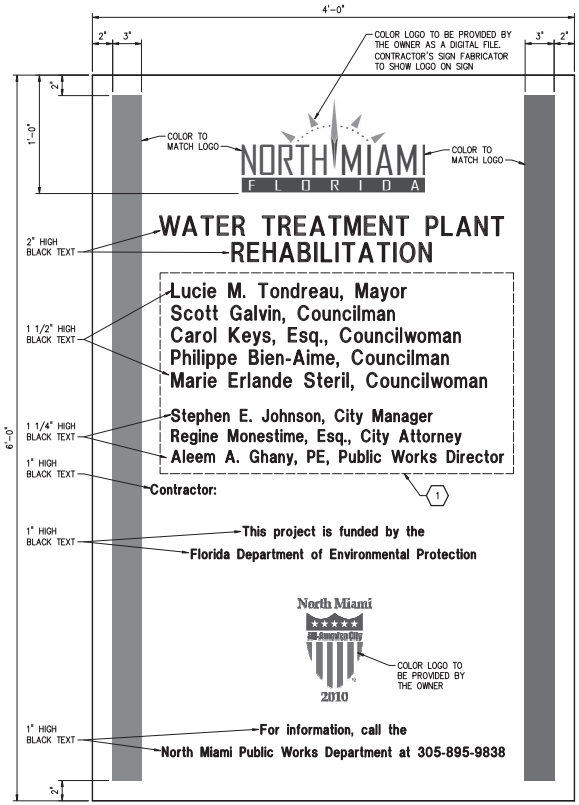

NOTE:
THE TEXT FONT SHALL BE AS SELECTED BY THE OWNER.

PROJECT SIGN TEXT

KEYED NOTES:

1. UPDATE NAMES AND TITLES AS REQUIRED TO MATCH ELECTED OFFICIALS AND CITY STAFF AT DATE OF PROJECT AWARD.

NO.	DATE	ISSUED FOR	BY
1	4/1/14	100% QA COMMENTS	H.J.V.

DESIGNED G.A.B.
DRAWN G.P.B.
CHECKED G.N.C.
PROJ. ENGR. G.A.B.

H. J. VIDAL P.E.
No. 37882

HAZEN AND SAWYER
Environmental Engineers & Scientists
4000 Hollywood Boulevard, Suite 750N
Hollywood, Florida 33021
Certificate of Authorization Number: 2771

SCALE NTS

CLIENTS PROJECT: –
ENGINEERS PROJECT: 44238-004
CAD REFERENCE: 44238-004BP3-C30

CITY OF NORTH MIAMI
PUBLIC WORKS UTILITIES

WINSON WATER TREATMENT PLANT
BID PACKAGE 3: WTP REHABILITATION
CIVIL DETAILS
SHEET 3

DATE: JUNE 2014
SHEET: 47 OF 335
DRAWING: C-30

PERMITTING

PLOT DATE: 6/10/2014 4:01 PM BY: HS

XREFs= .\Tblock\44238-004-BP3-TB

File = H:\44238-004\Drawings\Bid Package 3 - WTP Rehab\Civil\44238-004BP3-C30 Saved by HsCad2 Save date = 6/9/2014 9:00 PM

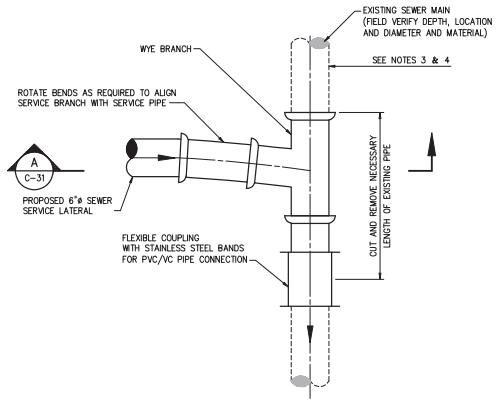

TOP PLAN

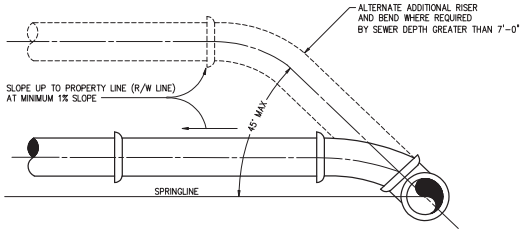

SECTION A

NOTES:

1. SINGLE SERVICE CONNECTIONS SHALL USE 6" SDR 26 PVC PIPE AND FITTINGS.
2. USE RISER CONNECTIONS WHERE INVERT OF SEWER IS MORE THAN 7'-0" DEEP.
3. WHERE BELL OF WYE AND SPIGOT OF EXISTING MAIN ARE NOT COMPATIBLE, USE A SECOND FLEXIBLE COUPLING.
4. RIGID COUPLINGS MAY BE USED IN LIEU OF FLEXIBLE COUPLINGS.
5. MAINTAIN 36" MINIMUM COVER FROM TOP OF SERVICE TO FINISH GRADE.
6. PVC SERVICES SHALL BE INSTALLED IN ACCORDANCE WITH MINIMUM STANDARDS OF THE UNI-BELL HANDBOOK OF PVC PIPE DESIGN AND CONSTRUCTION, LATEST EDITION.

WYE SEWER SERVICE CONNECTION

DETAIL 16
NTS C-03

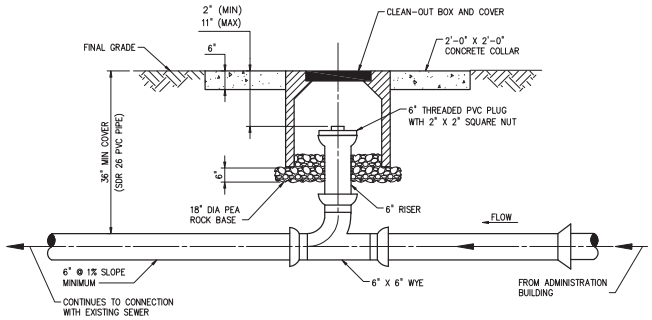

SEWER CLEANOUT

DETAIL 17
NTS C-03

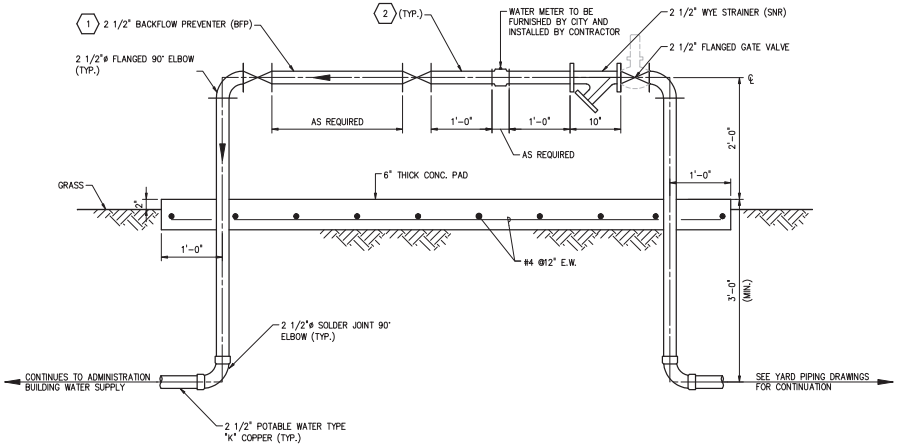

PLUMBING EQUIPMENT SCHEDULE		
ITEM No.	ITEM	DESCRIPTION
BFP	BACKFLOW PREVENTER	2 1/2" DIAMETER REDUCED PRESSURE ZONE TYPE BACKFLOW PREVENTER WITH STAINLESS STEEL BODY AND TWO FLANGED NON-RISING STEM RESILIENT SEATED GATE VALVES. THE WETTED SURFACES SHALL CONTAIN LESS THAN 0.25% BY WEIGHT OF LEAD. BACKFLOW PREVENTER SHALL BE SERIES 4000SS BY AMES FIRE AND WATERWORKS, OR EQUAL.
SNR	STRAINER	2 1/2" FLANGED END 304 STAINLESS STEEL BODY WYE PATTERN STRAINER. STRAINER SHALL BE SERIES B000F BY AMES FIRE AND WATERWORKS, OR EQUAL

BLACKFLOW PREVENTER

DETAIL 18
NTS C-03

KEYED NOTES:

1. DIMENSION MAY VARY BASED ON SUPPLIER.
2. THE CONTRACTOR SHALL SUPPLY AS NECESSARY ADAPTERS AND ACCESSORIES FOR A COMPLETE AND OPERABLE SYSTEM.

PLOT DATE: 6/10/2014 4:03 PM BY: HS

NO.	DATE	ISSUED FOR	BY

XREFs= ..\Tblock\44238-004-BP3-TB

DESIGNED G.A.B.
DRAWN H.F.M.
CHECKED J.N.M.
PROJ. ENGR. G.A.B.

H. J. VIDAL P.E.
No. 37882

HAZEN AND SAWYER
Environmental Engineers & Scientists
4000 Hollywood Boulevard, Suite 750N
Hollywood, Florida 33021
Certificate of Authorization Number: 2771

SCALE NTS

CLIENTS PROJECT: –
ENGINEERS PROJECT: 44238-004
CAD REFERENCE: 44238-004BP3-C31

NORTH MIAMI FLORIDA
CITY OF NORTH MIAMI
PUBLIC WORKS UTILITIES

WINSON WATER TREATMENT PLANT
BID PACKAGE 3: WTP REHABILITATION
CIVIL DETAILS
SHEET 4

DATE: JUNE 2014
SHEET: 48 OF 335
DRAWING: C-31

PERMITTING

File = H:\44238-004\Drawings\Bid Package 3 - WTP Rehab\Civil\44238-004BP3-C31 Saved by HsCal2 Save date = 6/9/2014 5:38 PM

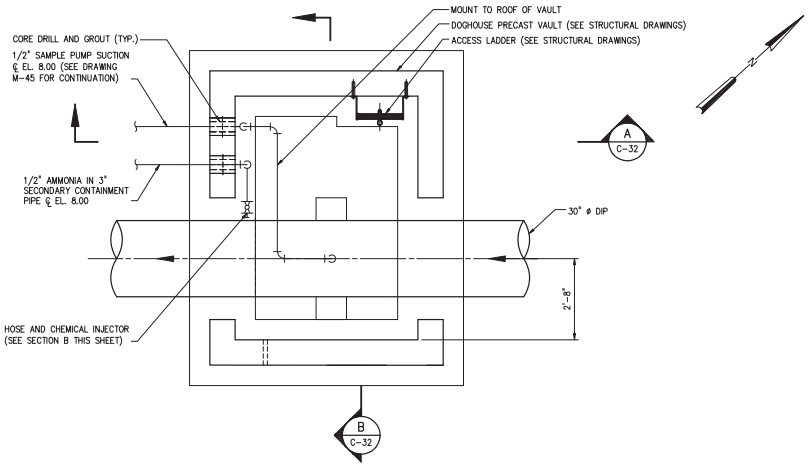

BOTTOM PLAN
1/2"=1'-0"

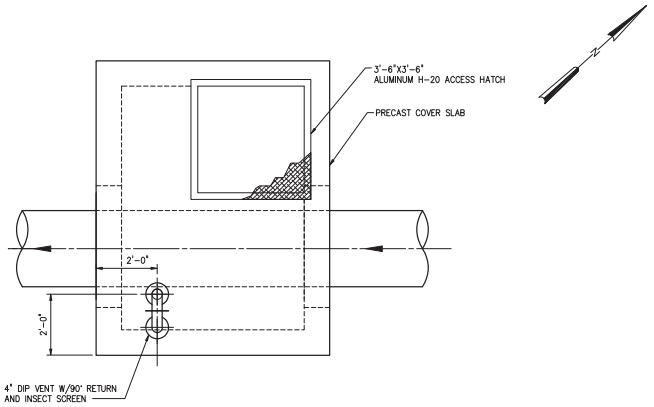

TOP PLAN
1/2"=1'-0"

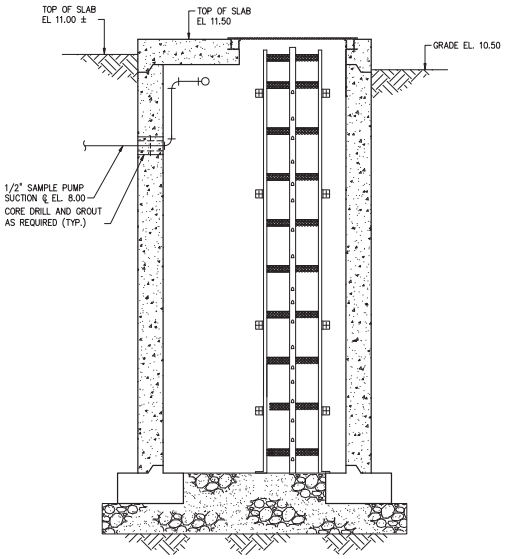

SECTION A C-32
1/2" = 1'-0"

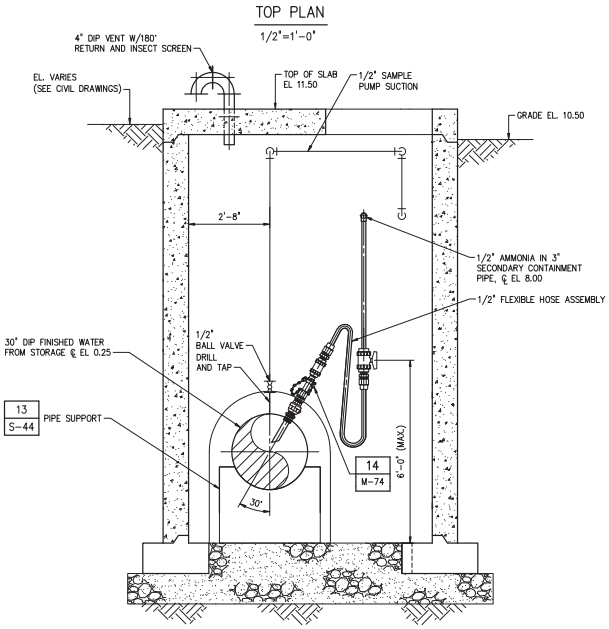

SECTION B C-32
1/2" = 1'-0"

CHEMICAL INJECTION VAULT
DETAIL 19 C-03
1/2" = 1'-0"

1/2"=1'-0" 12" 0 1 3'

NO.	DATE	ISSUED FOR	BY

DESIGNED G.A.B.
DRAWN H.F.M
CHECKED J.N.M.
PROJ. ENGR. G.A.B.

H. J. VIDAL P.E.
No. 37882

HAZEN AND SAWYER
Environmental Engineers & Scientists
4000 Hollywood Boulevard, Suite 750N
Hollywood, Florida 33021
Certificate of Authorization Number: 2771

SCALE 1/2"=1'-0"

CLIENTS PROJECT: –
ENGINEERS PROJECT: 44238-004
CAD REFERENCE: 44238-004BP3-C32

CITY OF NORTH MIAMI
PUBLIC WORKS UTILITIES

WINSON WATER TREATMENT PLANT
BID PACKAGE 3: WTP REHABILITATION
CIVIL DETAILS
SHEET 5

DATE: DECEMBER 2012
SHEET: 49 OF 160
DRAWING: C-32

PERMITTING

PLOT DATE: 6/10/2014 4:05 PM BY: HS
XREFs= ..\Base-BP3\S-BP3-ChemInjPoint-Plan,..\Base-BP3\S-BP3-ChemInjPoint-Section
File = H:\44238-004\Drawings\Bid Package 3 - WTP Rehab\Civil\44238-004BP3-C32 Saved by HsCol2 Save date = 6/9/2014 7:31 PM

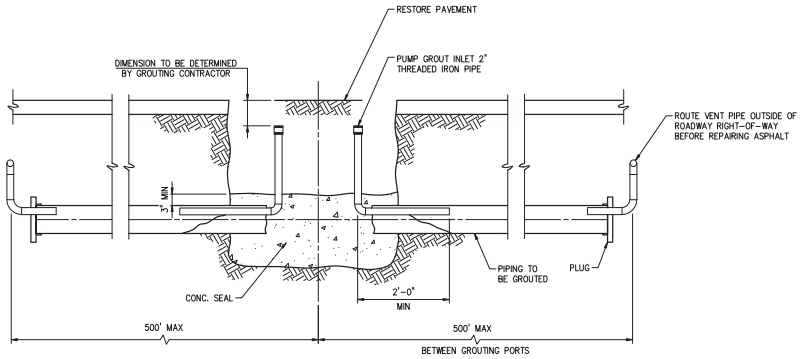

NOTE:

PROVIDE PLUGS, CORPORATION STOPS AND PIPING AS REQUIRED TO REMOVE AIR FROM THE ABANDONED PIPELINES WHILE GROUTING

NOTE:

PROVIDE PLUGS, CORPORATION STOPS AND PIPING AS REQUIRED TO REMOVE AIR FROM THE ABANDONED PIPELINES WHILE GROUTING

PIPE GROUTING

DETAIL 20 / C-02
NTS

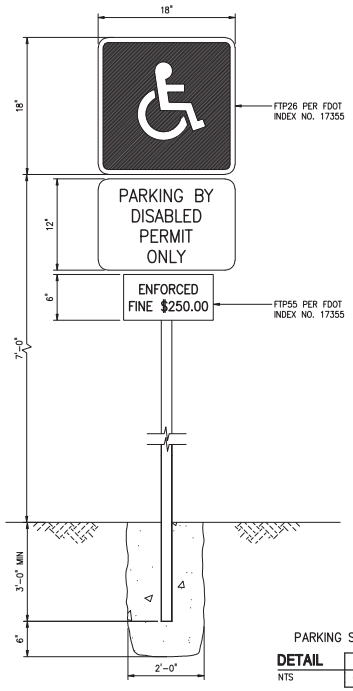

PARKING SIGN

DETAIL 22 / C-11
NTS

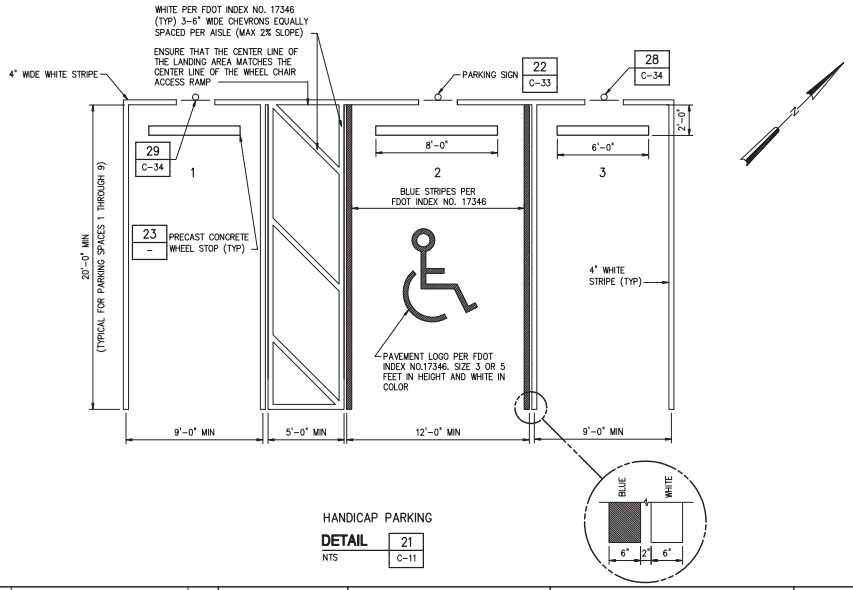

HANDICAP PARKING

DETAIL 21 / C-11
NTS

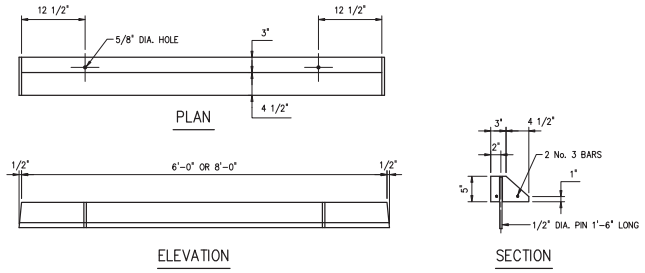

NOTE:

ALL CONCRETE SHALL BE CLASS "B"

WHEEL STOP DETAIL

DETAIL 23 / -
NTS

NO.	DATE	ISSUED FOR	BY

DESIGNED G.A.B.
DRAWN H.F.M.
CHECKED J.N.M.
PROJ. ENGR. G.A.B.

H. J. VIDAL P.E.
No. 37882

HAZEN AND SAWYER
Environmental Engineers & Scientists
4000 Hollywood Boulevard, Suite 750N
Hollywood, Florida 33021
Certificate of Authorization Number: 2771

SCALE NTS

CLIENTS PROJECT: –
ENGINEERS PROJECT: 44238-004
CAD REFERENCE: 44238-004BP3-C33

NORTH MIAMI FLORIDA
CITY OF NORTH MIAMI
PUBLIC WORKS UTILITIES

WINSON WATER TREATMENT PLANT
BID PACKAGE 3: WTP REHABILITATION
CIVIL DETAILS
SHEET 6

DATE: JUNE 2014
SHEET: 50 OF 335
DRAWING: C-33

PERMITTING

PLOT DATE: 6/10/2014 4:06 PM BY: HS
XREFs= ..\Block\44238-004-BP3-TB
File = H:\44238-004\Drawings\Bid Package 3 - WTP Rehab\Civil\44238-004BP3-C33 Saved by HsCol2 Save date = 6/9/2014 7:10 PM

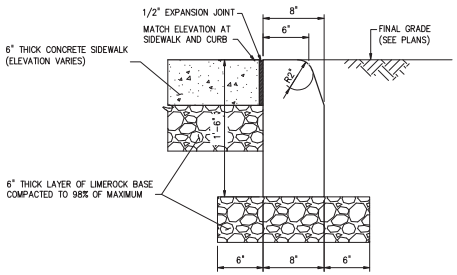

FDOT INDEX 300 – TYPE D CONCRETE CURB

DETAIL 24
NTS –

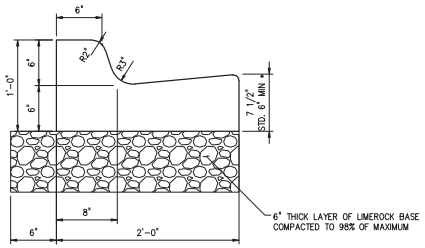

FDOT INDEX 300 – TYPE F CONCRETE CURB & GUTTER

DETAIL 25
NTS C-17

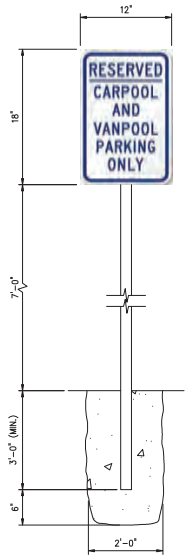

SIGN 1

DETAIL 28
NTS –

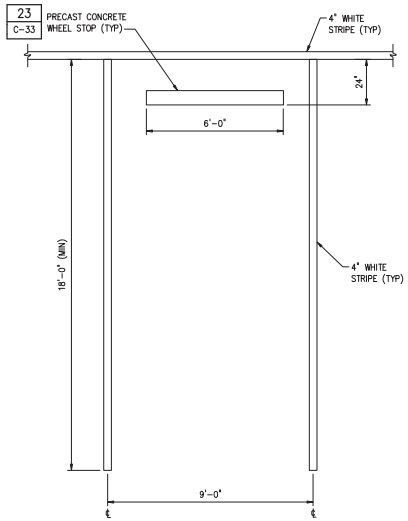

NOTE:

DETAIL IS TYPICAL FOR PARKING SPACES 10 THROUGH 23.

PARKING PLAN

DETAIL 26
NTS –

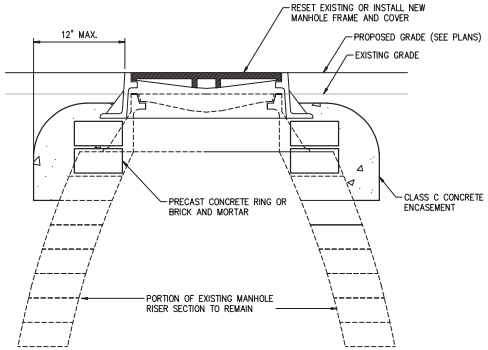

NOTES:

1. PREVENT SURFACE WATER, MUD AND FOREIGN MATERIAL FROM ENTERING SYSTEM DURING CONSTRUCTION.
2. REMOVE PORTION OF EXISTING SEWER MANHOLE RISER AS NECESSARY TO RETROFIT FRAME AND COVER TO REQUIRED FINISHED ELEVATION. FOR ADJUSTMENT USE NEW CONCRETE ADJUSTMENT RING SET ON 1/2 INCH MORTAR BED, OR BRICK AND MORTAR.
3. ALL COURSES ARE TO BE COATED INTERIOR AND EXTERIOR WITH 2 COATS OF COAL TAR EPOXY 10 MILS PER COAT.
4. ALL NEW BRICK IS TO BE 8000 PSI RED SEWER BRICK.

SEWER MANHOLE FRAME AND COVER

DETAIL 27
NTS C-11

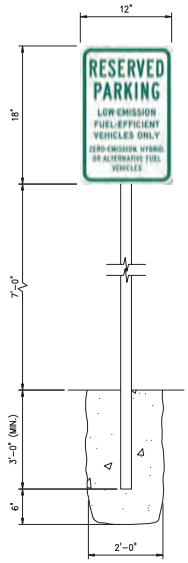

SIGN 2

DETAIL 29
NTS –

NO.	DATE	ISSUED FOR	BY

DESIGNED G.A.B.
DRAWN H.F.M.
CHECKED J.N.M.
PROJ. ENGR. G.A.B.

H. J. VIDAL P.E.
No. 37882

HAZEN AND SAWYER
Environmental Engineers & Scientists
4000 Hollywood Boulevard, Suite 750N
Hollywood, Florida 33021
Certificate of Authorization Number: 2771

SCALE NTS

CLIENTS PROJECT: –
ENGINEERS PROJECT: 44238-004
CAD REFERENCE: 44238-004BP3-C34

NORTH MIAMI FLORIDA
CITY OF NORTH MIAMI
PUBLIC WORKS UTILITIES

WINSON WATER TREATMENT PLANT
BID PACKAGE 3: WTP REHABILITATION
CIVIL DETAILS
SHEET 7

DATE: JUNE 2014
SHEET: 51 OF 335
DRAWING: C-34

PERMITTING

XREFs= ..\Tblock\44238-004-BP3-TB

File = H:\44238-004\Drawings\Bid Package 3 - WTP Rehab\Civil\44238-004BP3-C34 Saved by HScalf1 Save date = 6/9/2014 8:05 PM

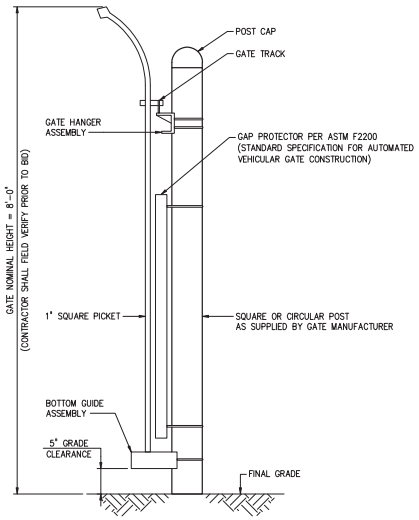

SIDE VIEW

GATE SCHEDULE				
GATE NO.	OVERALL LENGTH (L)	CLEAR OPENING "A"	COUNTERBALANCE POST SPACING CENTERLINE TO CENTERLINE "B"	"C"
1	21'-0"	14'-0"	6'-1"	14'-4"
2	33'-0"	22'-0"	10'-1"	22'-4"
3	33'-0"	22'-0"	10'-1"	22'-4"
5	21'-0"	14'-0"	6'-1"	14'-4"
6	33'-0"	22'-0"	10'-1"	22'-4"

NOTES:

1. ALL DIMENSIONS ARE APPROXIMATE AND MAY VARY WITH MANUFACTURER SUPPLIED.
2. NOMINAL GATE HEIGHT SHALL BE 8'-0" (FIELD VERIFY AND MATCH EXISTING).
3. DIRECTION OF GATE OPENING VARIES, SEE PLAN FOR GATE ORIENTATION AND GATE OPENING DIRECTION.
4. THE CENTERLINE TO CENTERLINE DIMENSION BETWEEN THE PICKETS SHALL MATCH THE EXISTING FENCE.
5. PRIOR TO BIDDING THE CONTRACTOR SHALL REVIEW THE EXISTING FIELD CONDITION TO SELECT FENCE AND GATE PICKET STYLE, HEIGHT AND COLOR TO MATCH THE EXISTING.
6. LOCATION SHOWN FOR SLIDE GATE OPERATOR IS APPROXIMATE. INSTALL PER MANUFACTURE'S DIRECTIONS.

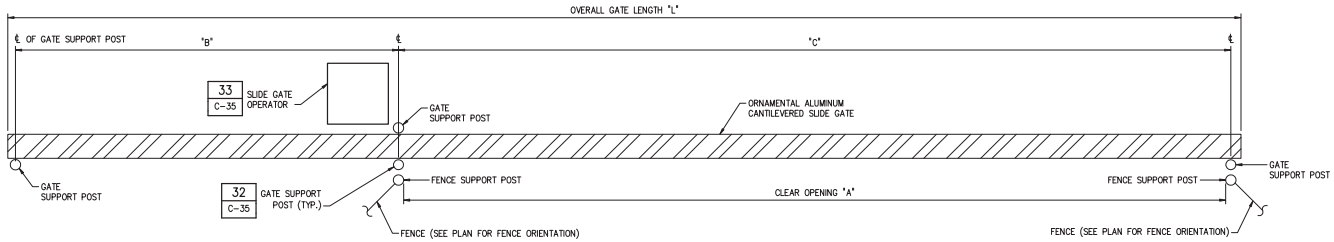

PLAN

CANTILEVERED SLIDE GATE

DETAIL 30 / C-16
NTS

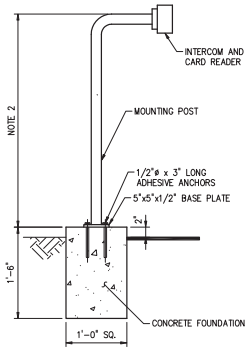

NOTES:

1. ALL ACCESS PEDESTALS MOUNTED ON THE EXTERIOR OF A PROPOSED ACCESS GATE SHALL BE EQUIPPED WITH A KNOX BOX MODEL 3502 ELECTRIC OVERRIDE KEY SWITCH AS REQUIRED BY MIAMI-DADE FIRE RESCUE.
2. COORDINATE HEIGHT OF MOUNTING POST WITH THE TYPICAL VEHICLES USED BY THE CITY OF NORTH MIAMI PUBLIC WORKS DEPARTMENT.

ACCESS PEDESTAL

DETAIL 31 / C-16
NTS

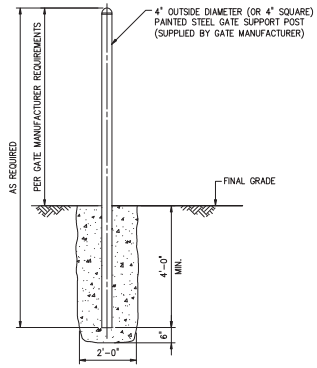

GATE SUPPORT POST

DETAIL 32 / –
NTS

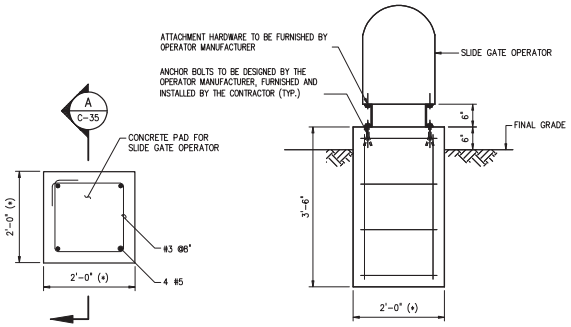

NOTE:

1. DIMENSIONS MARKED WITH (*) MAY VARY WITH THE EQUIPMENT SUPPLIED. THE CONTRACTOR SHALL COORDINATE THE EQUIPMENT PAD SIZE AND LOCATION WITH THE GATE MANUFACTURER.

SECTION A / C-35
NTS

SLIDE GATE OPERATOR EQUIPMENT PAD

DETAIL 33 / C-16
NTS

NO.	DATE	ISSUED FOR	BY

DESIGNED G.A.B.
DRAWN H.F.M.
CHECKED J.N.M.
PROJ. ENGR. G.A.B.

H. J. VIDAL P.E.
No. 37882

HAZEN AND SAWYER
Environmental Engineers & Scientists
4000 Hollywood Boulevard, Suite 750N
Hollywood, Florida 33021
Certificate of Authorization Number: 2771

SCALE NTS

CLIENTS PROJECT: –
ENGINEERS PROJECT: 44238-004
CAD REFERENCE: 44238-004BP3-C35

NORTH MIAMI FLORIDA
CITY OF NORTH MIAMI
PUBLIC WORKS UTILITIES

WINSON WATER TREATMENT PLANT
BID PACKAGE 3: WTP REHABILITATION
CIVIL DETAILS SHEET 8

DATE: JUNE 2014
SHEET: 52 OF 335
DRAWING: C-35

PERMITTING

PLOT DATE: 6/10/2014 4:15 PM BY: HS
XREFs= ..\Tblock\44238-004-BP3-TB
File = H:\44238-004\Drawings\Bid Package 3 - WTP Rehab\Civil\44238-004BP3-C35 Saved by HsCad2 Save date = 6/9/2014 7:04 PM

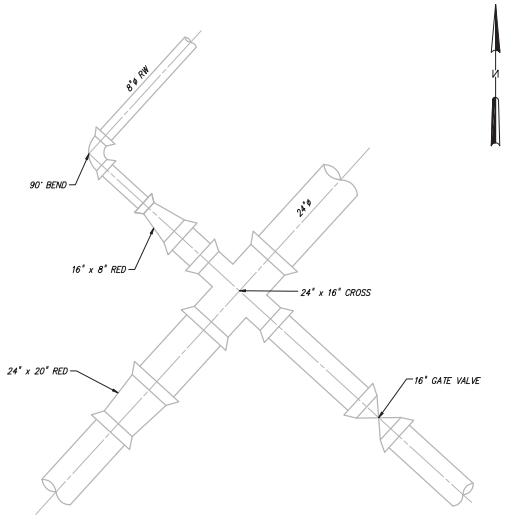

DETAIL 34
3/8" = 1'-0" C-01

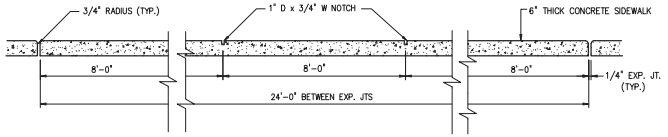

LONGITUDINAL SECTION

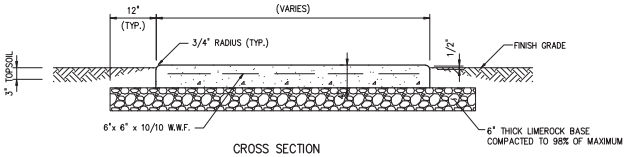

CROSS SECTION

NOTES:

1. THE CONTRACTOR SHALL CONSTRUCT AN EXPANSION JOINT AT SPACINGS SHOWN ABOVE, AT THE END OF DAYS WORK, POINTS OF CURVATURE, AND AT ADJOINING STRUCTURES.
2. WHERE SIDEWALKS ARE SHOWN PARALLEL AND ADJACENT WITH FACE OF A BUILDING, THE CROSS SLOPE OF THE SIDEWALK SHALL SLOPE AWAY FROM THE BUILDING FACE AT A MAXIMUN OF 1/4" PER FOOT.

TYPICAL SIDEWALK – WALKWAY

DETAIL 35
NTS C-11

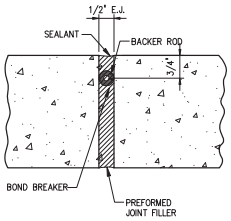

CONCRETE WALKWAY EXPANSION

DETAIL 36
NTS –

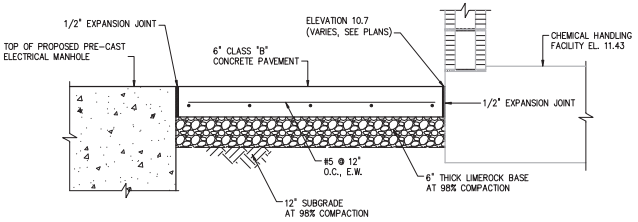

SECTION AT CHEMICAL HANDLING FACILITY

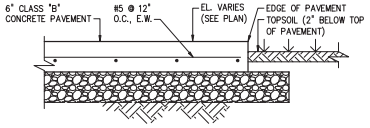

SECTION AT EDGE OF PAVEMENT

NOTES:

1. WHERE AGREED TO BY THE ENGINEER, CONCRETE PAVEMENT SHALL BE USED AT AREAS SHOWN TO BE PAVED WITH ASPHALT THAT ARE NOT ACCESSIBLE DUE TO SITE CONSTRAINTS AT NO ADDITIONAL COST TO THE OWNER.

DETAIL 37
NTS –

3/8"=1'-0"

12" 0 1 2 4'

PLOT DATE: 6/10/2014 4:19 PM BY: HS

NO.	DATE	ISSUED FOR	BY

XREFs= ..\Tblock\44238-004-BP3-TB

DESIGNED G.A.B.
DRAWN L.M.S.
CHECKED J.N.M.
PROJ. ENGR. G.A.B.

H. J. VIDAL P.E.
No. 37882

HAZEN AND SAWYER
Environmental Engineers & Scientists
4000 Hollywood Boulevard, Suite 750N
Hollywood, Florida 33021
Certificate of Authorization Number: 2771

SCALE: AS NOTED

CLIENTS PROJECT: –
ENGINEERS PROJECT: 44238-004
CAD REFERENCE: 44238-004BP3-C36

NORTH MIAMI FLORIDA
CITY OF NORTH MIAMI
PUBLIC WORKS UTILITIES

WINSON WATER TREATMENT PLANT
BID PACKAGE 3: WTP REHABILITATION

CIVIL DETAILS
SHEET 9

DATE: JUNE 2014
SHEET: 53 OF 335
DRAWING: C-36

PERMITTING

File = H:\44238-004\Drawings\Bid Package 3 – WTP Rehab\Civil\44238-004BP3-C36 Saved by HScalf Save date = 6/9/2014 7:33 PM

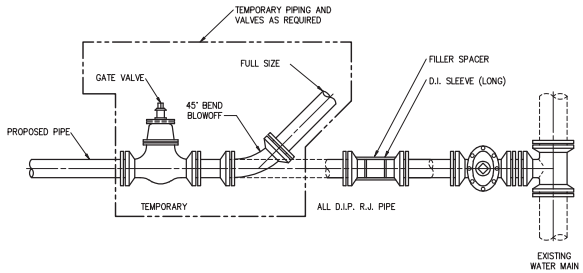

NOTES:

1. UPON COMPLETION OF THE PIPE INSTALLATION FOR ANY SECTION, THE MAINS SHALL BE SWABBED AND FLUSHED TO REMOVE DIRT AND ANY OTHER FOREIGN MATTER BY ACHIEVING A MINIMUM VELOCITY OF 2.5 FEET PER SECOND IN THE PIPE. TEMPORARY FITTINGS, PIPE, ETC. MAY BE NEEDED TO FACILITATE FLUSHING.
2. INSTALL A 45° BEND AND ASSOCIATED PIPING AS SHOWN TO DIRECT THE FLUSHING WATER AWAY FROM THE IMMEDIATE WORK AREA AND EXERCISE DUE CARE SO AS TO ENSURE THAT THE WATER USED IN FLUSHING DOES NOT CAUSE A NUISANCE OR PROPERTY DAMAGE.
3. TEMPORARY BENDS AND PIPING SHALL BE THE SAME SIZE AS THE LINE TO BE FLUSHED.
4. PRIOR TO THE ACTUAL FLUSHING OPERATION, THE CONTRACTOR SHALL NOTIFY THE CITY INSPECTOR OF SUCH INTENDED WATER USE.
5. NO EXISTING VALVES SHALL BE TURNED ON OR OFF, EXCEPT BY AUTHORIZED CITY PERSONNEL.
6. FLUSHING SHALL NOT BE INITIATED WITHOUT THE ACTUAL PRESENCE OF THE CITY INSPECTOR.
7. AFTER THE LINE UNDER CONSTRUCTION HAS BEEN SUCCESSFULLY FLUSHED, THE CONTRACTOR SHALL REMOVE THE TEMPORARY PIPING ARRANGEMENT AND PROCEED WITH THE REMAINING CONSTRUCTION AS SPECIFIED.

FLUSHING CONNECTION

DETAIL 37
NTS –

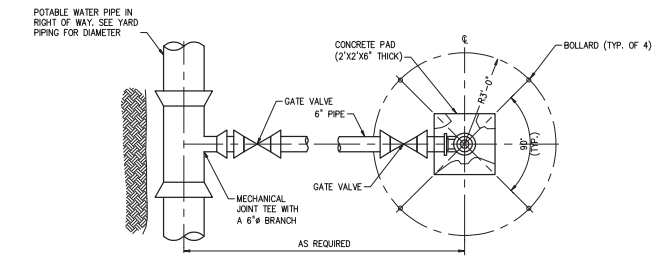

PLAN

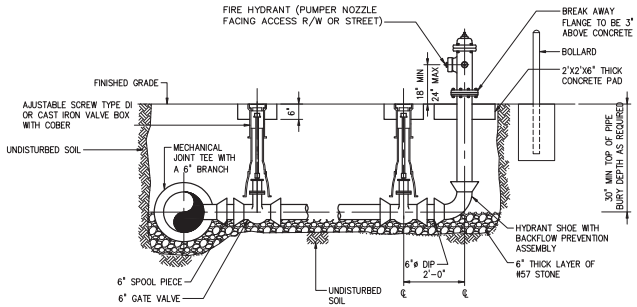

SECTION

DETAIL 38
NTS C-03

NOTES:

1. RESTRAIN ALL JOINTS.
2. A BLUE REFLECTIVE PAVEMENT MARKER SHALL BE PROVIDED IN THE CENTER OF THE NEAREST LANE OF ROAD PAVEMENT ADJACENT TO ALL FIRE HYDRANT LOCATIONS.
3. CONTRACTOR SHALL COLOR CODE THE TOP OF EACH HYDRANT INDICATED BY THE GALLONS PER MINUTE OF FLOW. THE BODY OF ALL FIRE HYDRANT SHALL BE PAINTED YELLOW (RUST– OLEUM #944 SAFETY YELLOW, O.A.E. WITH A 40 MIL DFT.) AND THE TOP COLOR CODED AS FOLLOWS:

FLOW	COLOR OF BONNETS & CAPS
1500 GPM OR GREATER	BLUE
1000 GPM OR GREATER	GREEN
500 TO 1000 GPM	ORANGE
LESS THAN 500 GPM	RED

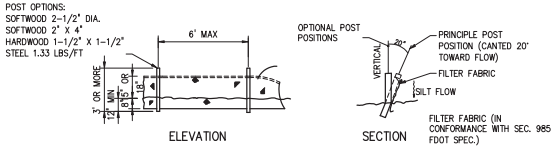

SILT FENCE DETAIL

DETAIL 39
NTS –

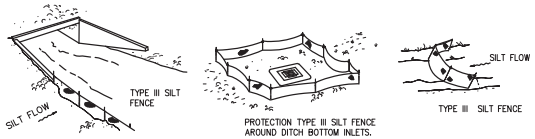

DO NOT DEPLOY IN A MANNER THAT SILT FENCES WILL ACT AS A DAM ACROSS PERMANENT FLOWING WATERCOURSES. SILT FENCES ARE TO BE USED AT UPLAND LOCATIONS AND TURBIDITY BARRIERS USED AT PERMANENT BODIES OF WATER.

SILT FENCE APPLICATIONS

DETAIL 40
NTS –

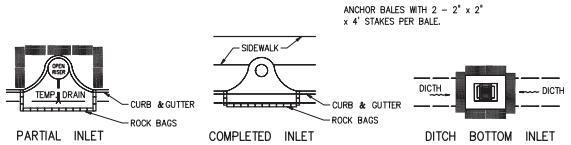

PROTECTION AROUND INLET OR SIMILAR STRUCTURES

DETAIL 41
NTS –

NO.	DATE	ISSUED FOR	BY

DESIGNED G.A.B.
DRAWN H.F.M.
CHECKED J.N.M.
PROJ. ENGR. G.A.B.

H. J. VIDAL P.E.
No. 37882

HAZEN AND SAWYER
Environmental Engineers & Scientists
4000 Hollywood Boulevard, Suite 750N
Hollywood, Florida 33021
Certificate of Authorization Number: 2771

SCALE NTS

CLIENTS PROJECT: –
ENGINEERS PROJECT: 44238-004
CAD REFERENCE: 44238-004BP3-C37

NORTH MIAMI FLORIDA
CITY OF NORTH MIAMI
PUBLIC WORKS UTILITIES

WINSON WATER TREATMENT PLANT
BID PACKAGE 3: WTP REHABILITATION
CIVIL DETAILS
SHEET 10

DATE: JUNE 2014
SHEET: 54 OF 335
DRAWING: C-37

PERMITTING

PLOT DATE: 6/10/2014 4:22 PM BY: HS
XREFs= ..\Block\44238-004-BP3-TB
File = H:\44238-004\Drawings\Bid Package 3 – WTP Rehab\Civil\44238-004BP3-C37 Saved by HS Save date = 6/9/2014 8:50 PM

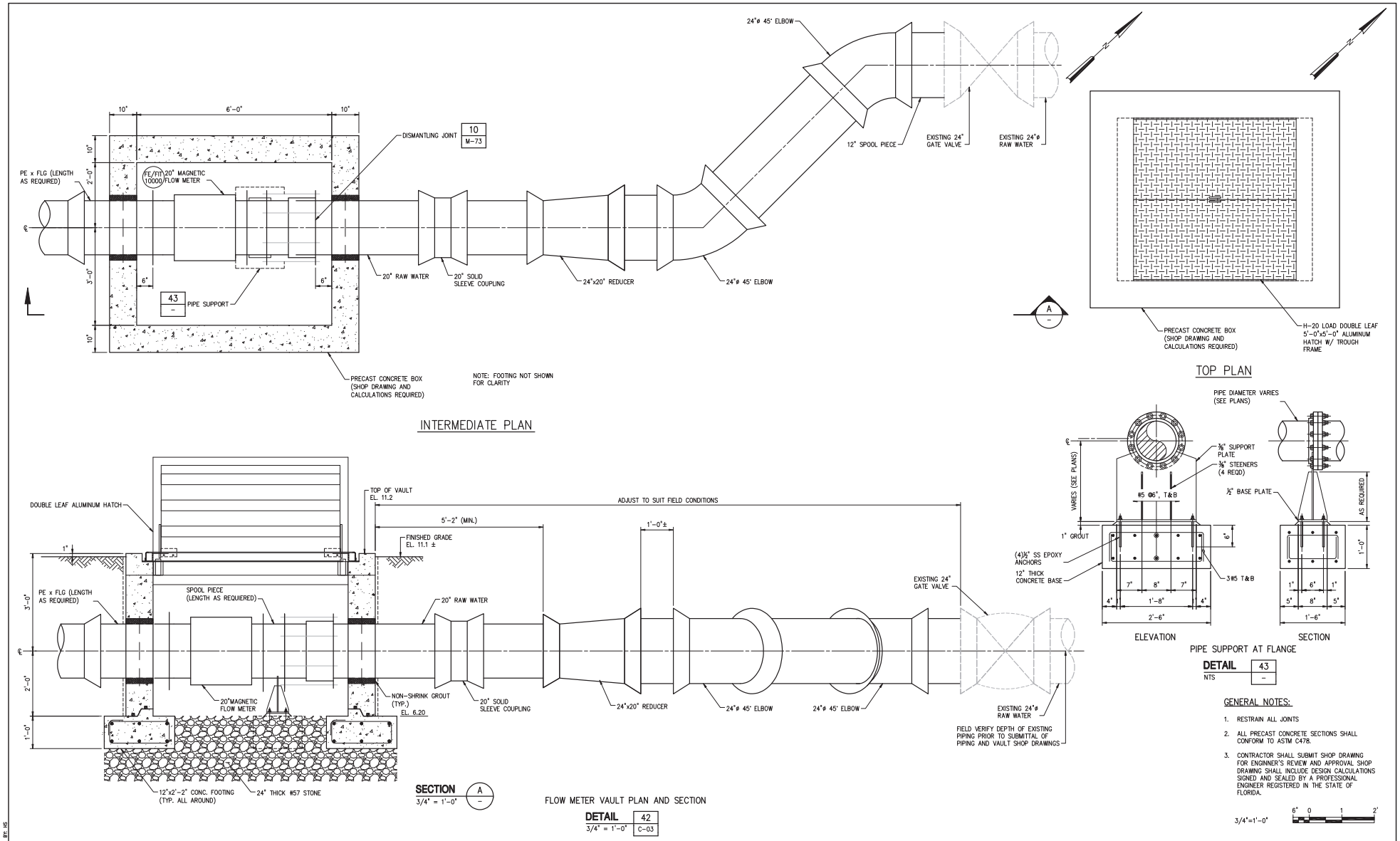

NO.	DATE	ISSUED FOR	BY

DESIGNED G.A.B.
DRAWN G.P.B.
CHECKED J.N.M.
PROJ. ENGR. G.A.B.

H. J. VIDAL P.E.
No. 37882

HAZEN AND SAWYER
Environmental Engineers & Scientists
4000 Hollywood Boulevard, Suite 750N
Hollywood, Florida 33021
Certificate of Authorization Number: 2771

SCALE: AS NOTED

CLIENTS PROJECT: –
ENGINEERS PROJECT: 44238-004
CAD REFERENCE: 44238-004BP3-C38

NORTH MIAMI FLORIDA
CITY OF NORTH MIAMI
PUBLIC WORKS UTILITIES

WINSON WATER TREATMENT PLANT
BID PACKAGE 3: WTP REHABILITATION
CIVIL DETAILS
SHEET 11

DATE: JUNE 2014
SHEET: 55 OF 335
DRAWING: C-38

PERMITTING

PLOT DATE: 6/10/2014 4:25 PM BY: HS

XREFs= ..\Tblock\44238-004-BP3-TB,..\Base-BP3\S-BP3-FlowMeter-IntermediatePlan,..\Base-BP3\S-BP3-FlowMeter-Sections,..\Base-BP3\M-BP3-FlowMeter-IntermediatePlan,..\Base-BP3\M-BP3-FlowMeter-Sections,..\Base-BP3\S-BP3-FlowMeter-TopPlan

File = H:\44238-004\Drawings\Bid Package 3 - WTP Rehab\Civil\44238-004BP3-C38 Saved by HScalf Save date = 6/9/2014 8:18 PM

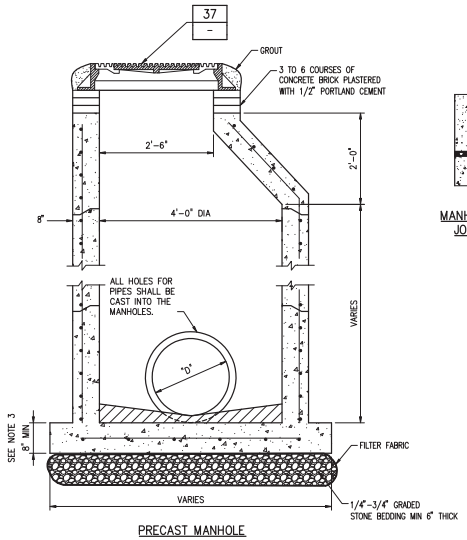

PRECAST MANHOLE

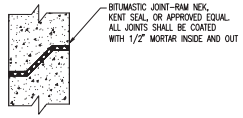

MANHOLE BARREL JOINT DETAIL

NOTES:

1. MANHOLE SHALL CONFORM TO ASTM C478 WITH 4000 PSI CONCRETE.
2. CONE SECTION MAY BE EITHER CONCENTRIC OR ECCENTRIC.
3. BASE SHALL BE A MINIMUM OF 8" AND PRECAST WITH BOTTOM SECTION.
4. ONE GAGE #5 @ 12" CTRS., BOTH WAYS, IN CENTER 1/3 OF CONCRETE WALL.
5. COMPLETELY FILL ANNULUS BETWEEN PIPE AND M/H WALL WITH CLAY BRICK AND PORTLAND TYPE II CEMENT.
6. FOR ADDITIONAL INFORMATION AND CLARIFICATION CONCERNING MANHOLE AND INLET CONSTRUCTION DETAILS AND SPECIFICATIONS, REFER TO FDOT ROADWAY AND TRAFFIC DESIGN STANDARDS (STANDARD INDEX MANUAL) LATEST EDITION

STORM SEWER PRECAST MANHOLE

DETAIL 44
NTS C-11

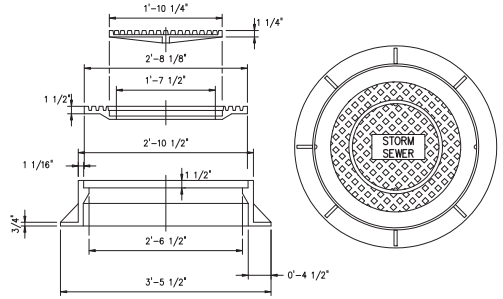

NOTES:

1. U.S.F. #230-AB-M MANHOLE RING AND DOUBLE COVER. APPROXIMATE TOTAL WEIGHT 605 POUNDS.
2. MANHOLE COVER SHALL BE IMPRINTED WITH "STORM SEWER" AND WITH NOTE "CONFINED SPACE".
3. PAVED AREAS – SET FRAMES AT FINISH GRADE, UNPAVED AREAS – SET FRAMES AT FINISH GRADE + 0.15'

STORM SEWER MANHOLE FRAME AND RING

DETAIL 45
NTS –

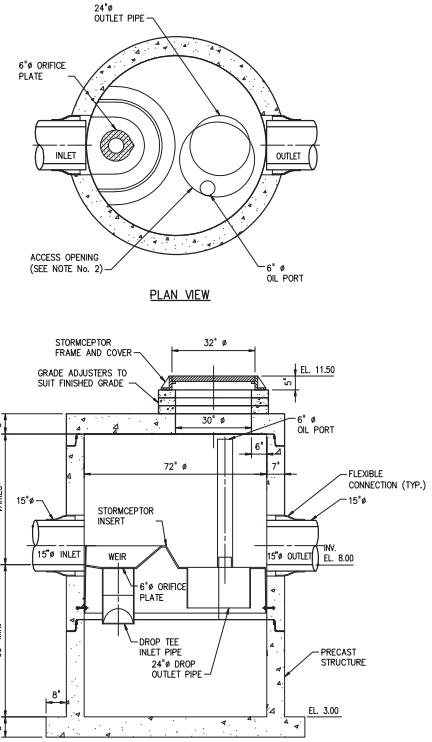

NOTES:

1. FLEXIBLE CONNECTION SHALL BE FURNISHED AND INSTALLED AT THE INLET AND OUTLET.
2. THE COVER SHALL BE POSITIONED OVER THE OUTLET DROP PIPE AND THE OIL PORT.

WATER QUALITY STRUCTURE

DETAIL 46
NTS C-14

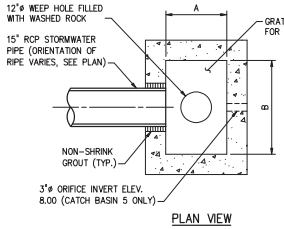

NOTES:

1. ALL PRECAST CONCRETE CATCH BASINS SHALL COMPLY WITH TO ASTM C478.
2. STRUCTURAL STEEL SHALL BE ASTM A-38 ANGLES, BEAMS, AND PLATES.
3. COAT EXTERIOR OF STRUCTURE AS SPECIFIED UNDER SECTION 09900 OF THE SPECIFICATIONS.
4. JOINTS SHALL BE SEALED WITH RAMNECK GASKETS OR EQUAL.
5. CONTRACTOR TO VERIFY ALL DIMENSIONS IN THE FIELD PRIOR TO CONSTRUCTION AND SHALL NOTIFY THE ENGINEER OF ANY DISCREPANCIES.
6. COAT INTERIOR OF MANHOLE WITH 30 MILS OF COAL TAR EPOXY.
7. SEE DETAIL 64 ON DRAWING C-43 FOR ADDITIONAL INFORMATION FOR CATCH BASIN 5.

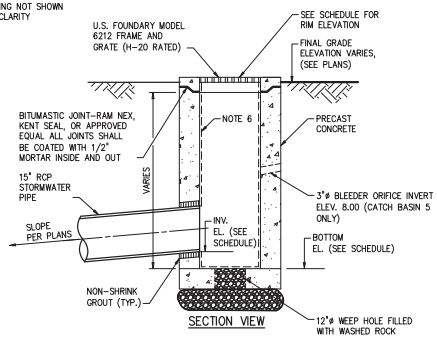

CATCH BASIN

DETAIL 47
NTS C-11

STORM SEWER CATCH BASIN AND MANHOLE SCHEDULE

ID NO.	DESCRIPTION	RIM EL.	INVERT ELEVATION					BOTTOM ELEV.	A	B
			NE	NW	SE	SW	N			
CB 1	TYPE D CATCH BASIN	10.3	7.8	7.8	N/A	7.8	N/A	6.5	3'-1"	4'-1"
CB 2	TYPE C CATCH BASIN	9.0	N/A	N/A	6.5	N/A	N/A	5.5	2'-0"	3'-1"
CB 3	TYPE C CATCH BASIN	9.0	N/A	6.5	N/A	N/A	N/A	5.5	2'-0"	3'-1"
CB 4	TYPE C CATCH BASIN	8.0	N/A	N/A	N/A	6.5	N/A	5.5	2'-0"	3'-1"
CB 5	TYPE C CATCH BASIN	10.5	N/A	N/A	N/A	N/A	8.0	6.0	2'-0"	3'-1"
MH 1	48" DIAM MANHOLE	10.8	7.1	6.6	6.6	N/A	N/A	5.5	N/A	N/A
MH 2	48" DIAM MANHOLE	10.8	6.6	N/A	7.3	N/A	N/A	5.5	N/A	N/A

NOTE:

1. TYPE C AND D CATCH BASINS PER FLORIDA DEPARTMENT OF TRANSPORTATION INDEX 232

DETAIL 48
NTS –

Szauer Engineering
Civil Engineers
7050 W. Palmetto Park Road, No. 15399
Boca Raton, FL 33433
Certificate of Authorization Number 30129

NO.	DATE	ISSUED FOR	BY

PLOT DATE: 6/10/2014 4:30 PM BY: HS

XREFs= ..\Tblock\44238-004-BP3-TB

DESIGNED G.A.B.
DRAWN G.P.B.
CHECKED J.N.M.
PROJ. ENGR. G.A.B.

JORGE M. SZAUER P.E.
No. 62579

HAZEN AND SAWYER
Environmental Engineers & Scientists
4000 Hollywood Boulevard, Suite 750N
Hollywood, Florida 33021
Certificate of Authorization Number: 2771

SCALE NTS

CLIENTS PROJECT: –
ENGINEERS PROJECT: 44238-004
CAD REFERENCE: 44238-004BP3-C39

NORTH MIAMI FLORIDA
CITY OF NORTH MIAMI
PUBLIC WORKS UTILITIES

WINSON WATER TREATMENT PLANT
BID PACKAGE 3: WTP REHABILITATION

CIVIL DETAILS
SHEET 12

DATE: JUNE 2014
SHEET: 56 OF 335
DRAWING: C-39

PERMITTING

File = H:\44238-004\Drawings\Bid Package 3 - WTP Rehab\Civil\44238-004BP3-C39 Saved by HScalil Save date = 6/9/2014 9:17 PM

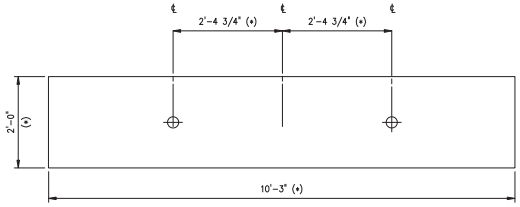

TOP VIEW OF FOOTING

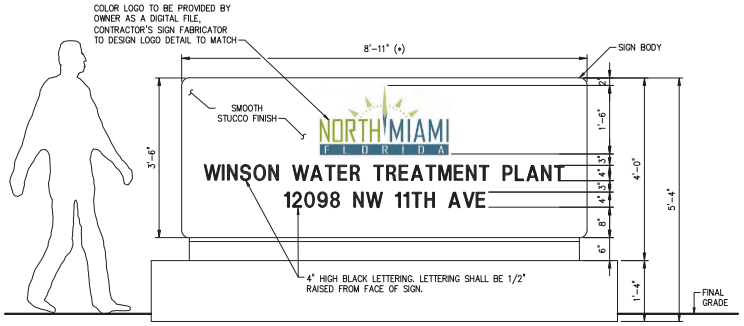

LOGO ELEVATION

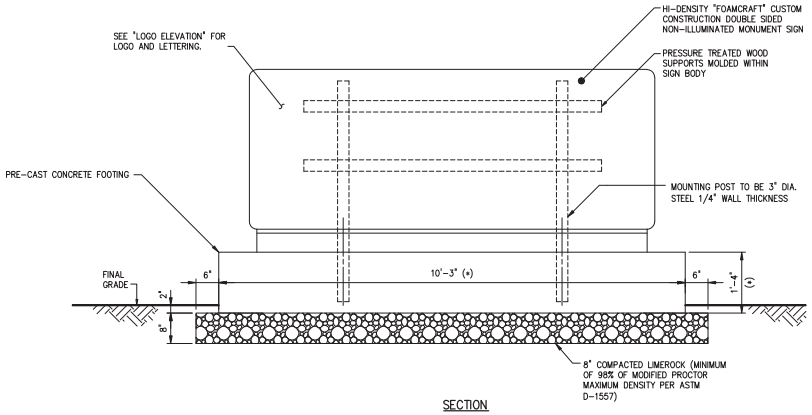

SECTION

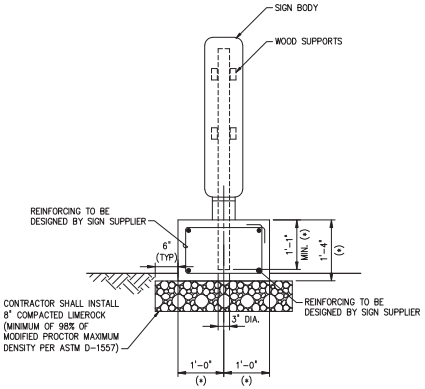

SIDE VIEW

ENTRANCE SIGN

DETAIL 3/4" = 1'-0" | 49 | –

NOTES:

1. THE CONTRACTOR SHALL RETAIN GRAPHPLEX SIGNAGE, OR EQUAL (PHONE: 954-920-0905) TO DESIGN, FABRICATE AND INSTALL THE PROPOSED ENTRANCE SIGN.
2. THE DRAWINGS INCLUDED HEREWITH ARE CONCEPTUAL ILLUSTRATIONS OF THE PROPOSED SIGN. THE CONTRACTOR, THROUGH THE SIGN SUPPLIER, SHALL TAKE FULL RESPONSIBILITY FOR THE DESIGN OF THE SIGN.
3. THE SIGN SUPPLIER, THROUGH THE CONTRACTOR, SHALL SUBMIT SHOP DRAWINGS IN ACCORDANCE WITH SECTION 01300 OF THE SPECIFICATIONS. THE SHOP DRAWINGS SHALL INCLUDE DETAILED DIMENSIONS AND REINFORCING DESIGN FOR FOOTING. SHOP DRAWINGS SHALL INCLUDE CALCULATIONS DEMONSTRATING COMPLIANCE WITH THE FLORIDA BUILDING CODE. THE CALCULATIONS SHALL BE SIGNED AND SEALED BY PROFESSIONAL ENGINEER LICENSED IN THE STATE OF FLORIDA.
4. THE CONTRACTOR IS RESPONSIBLE FOR OBTAINING ALL PERMITS NEEDED FOR THE SIGN.
5. (*) ALL DIMENSIONS SHOWN ARE APPROXIMATE.

3/4"=1'-0" 6" 0 1 2'

NO.	DATE	ISSUED FOR	BY

DESIGNED G.A.B.
DRAWN G.P.B.
CHECKED G.N.C.
PROJ. ENGR. G.A.B.

H. J. VIDAL P.E. No. 37882

HAZEN AND SAWYER
Environmental Engineers & Scientists
4000 Hollywood Boulevard, Suite 750N
Hollywood, Florida 33021
Certificate of Authorization Number: 2771

SCALE 3/4"=1'-0"

CLIENTS PROJECT: –
ENGINEERS PROJECT: 44238-004
CAD REFERENCE: 44238-004BP3-C40

CITY OF NORTH MIAMI
PUBLIC WORKS UTILITIES

WINSON WATER TREATMENT PLANT
BID PACKAGE 3: WTP REHABILITATION
CIVIL DETAILS SHEET 13

DATE: JUNE 2014
SHEET: 57 OF 335
DRAWING: C-40

PLOT DATE: 6/10/2014 4:34 PM BY: HS
XREFs= ..\Tblock\44238-004-BP3-TB
File = H:\44238-004\Drawings\Bid Package 3 - WTP Rehab\Civil\44238-004BP3-C40 Saved by HsCad2 Save date = 6/9/2014 8:53 PM

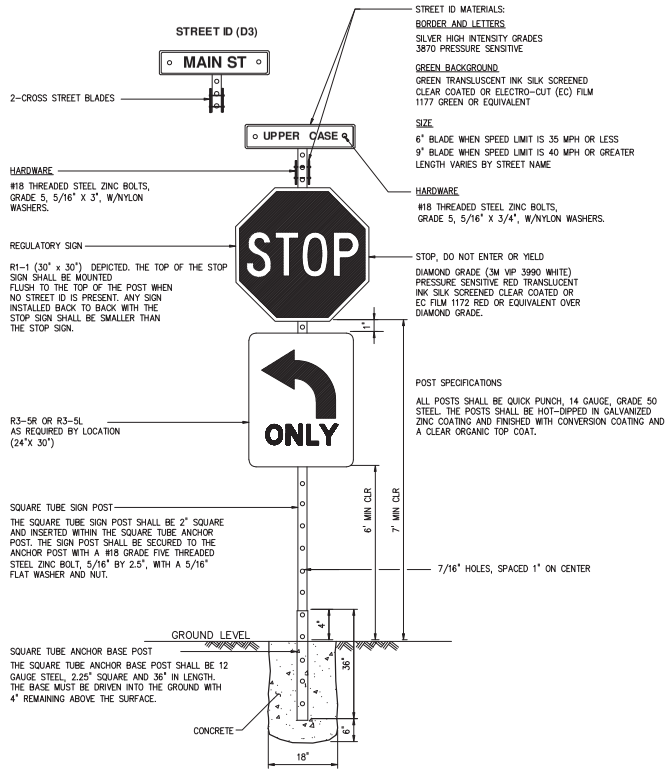

STOP SIGN

DETAIL 50
NTS –

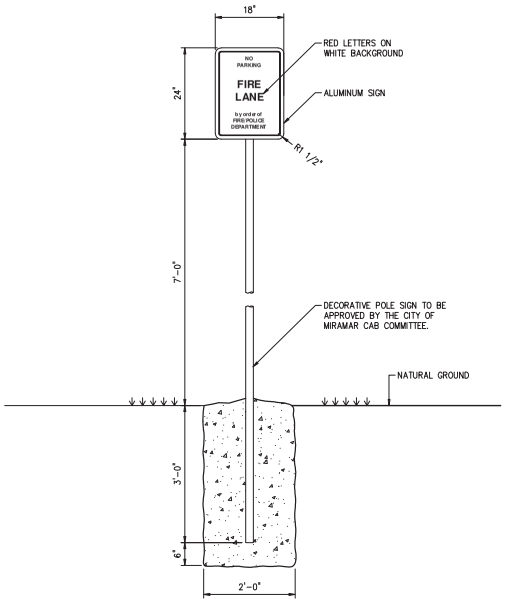

FIRE LANE SIGN

DETAIL 51
NTS –

FIRE LANE STRIPING

DETAIL 52
NTS –

FIRE LANE GUIDELANES

1. LETTER SIZE: MINIMUM OF 18" HIGH AND 2" WIDE
2. PAINT COLOR: YELLOW
3. PAINT TYPE: THERMOPLASTIC
4. DIAGONAL STRIPES & PARALLEL LINES: MINIMUM OF 4" WIDE
5. ANGLES BETWEEN THE PARALLEL LINES AT 4'-0" INTERVALS

NO.	DATE	ISSUED FOR	BY

DESIGNED G.A.B.
DRAWN G.P.B.
CHECKED J.N.M.
PROJ. ENGR. G.A.B.

H. J. VIDAL P.E.
No. 37882

HAZEN AND SAWYER
Environmental Engineers & Scientists
4000 Hollywood Boulevard, Suite 750N
Hollywood, Florida 33021
Certificate of Authorization Number: 2771

SCALE NTS

CLIENTS PROJECT: –
ENGINEERS PROJECT: 44238-004
CAD REFERENCE: 44238-004BP3-C41

NORTH MIAMI FLORIDA
CITY OF NORTH MIAMI
PUBLIC WORKS UTILITIES

WINSON WATER TREATMENT PLANT
BID PACKAGE 3: WTP REHABILITATION
CIVIL DETAILS
SHEET 14

DATE: JUNE 2014
SHEET: 58 OF 335
DRAWING: C-41

PERMITTING

PLOT DATE: 6/10/2014 4:35 PM BY: HS
XREFs= ..\Tblock\44238-004-BP3-TB
File = H:\44238-004\Drawings\Bid Package 3 - WTP Rehab\Civil\44238-004BP3-C41 Saved by HsCad2 Save date = 6/9/2014 8:20 PM

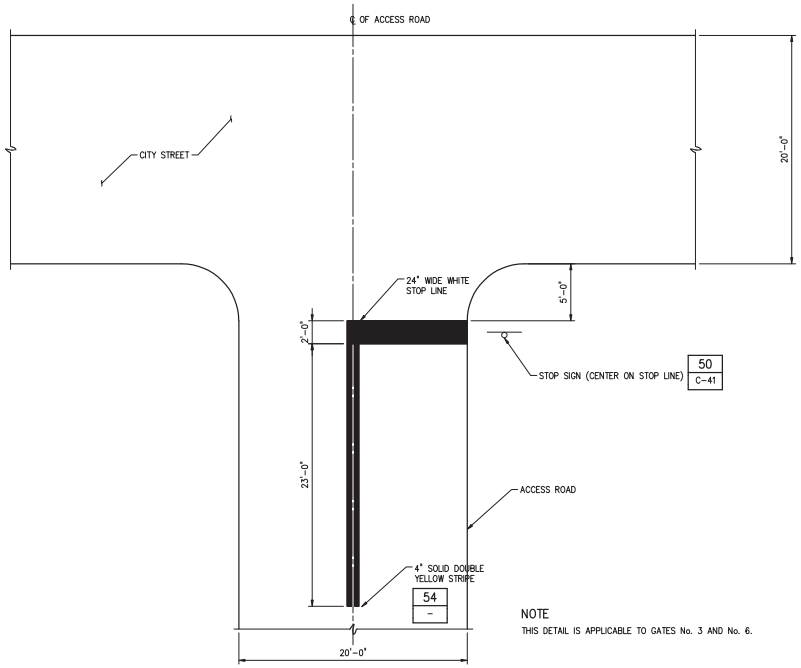

NOTE

THIS DETAIL IS APPLICABLE TO GATES No. 3 AND No. 6.

STOP LINE AND STOP SIGN LOCATION PLAN

DETAIL 53 / – NTS

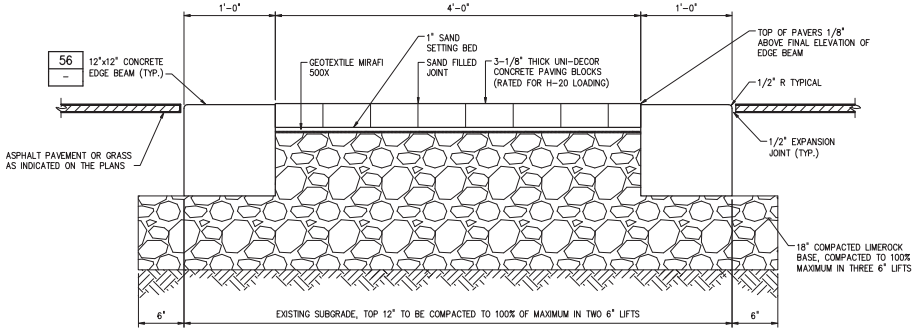

NOTES:

1. CONTRACTOR SHALL GIVE SPECIAL ATTENTION TO ACHIEVE COMPACTION REQUIREMENTS AT AREAS ADJACENT TO EDGE RESTRAINTS, CATCH BASINS, AND UTILITY STRUCTURES.
2. CONTRACTOR SHALL FORM THE INTENDED SURFACE PROFILE OF THE BASE SO THAT THE PAVERS CAN BE PLACED ON A UNIFORM THICKNESS OF BEDDING SAND.
3. SURFACE OF COMPACTED BASE SHALL BE SMOOTH WITH A SURFACE SMOOTHNESS MAXIMUM TOLERANCE OF ± 3/8" OVER A 10' STRAIGHTEDGE. UNEVEN AREAS OF THE LIMEROCK BASE SURFACE MUST BE MADE LEVEL. PRIOR TO PLACING THE BEDDING SAND. BEDDING SAND SHALL NOT BE USED TO COMPENSATE FOR AN UNEVEN BASE.
4. CONTRACTOR SHALL ENSURE THAT ALL SURROUNDINGS CONTAINING EDGES, AND COMPACTED BASE ARE COMPLETED PRIOR TO INITIATING PAVER INSTALLATION.
5. BEDDING SAND SHALL CONFORM TO ASTMC33 (CONCRETE SAND) WITH 0% PASSING No. 200 SIEVE. SPREAD BEDDING SAND AT OPTIMUM MOISTURE CONTENT EVENLY OVER BASE AND SCREED SAND TO AN EVEN THICKNESS OF 1" (± 3/16"). THE SCREEDED SAND SHALL NOT BE DISTURBED.
6. LAY PAVERS IN THE PATTERN INDICATED. MAINTAIN STRAIGHT JOINT LINES. JOINTS BETWEEN PAVERS SHALL BE CONSISTENT AND BETWEEN 1/16 TO 1/8 INCH WIDE.
7. AFTER AN AREA OF PAVERS ARE PLACED, IT SHALL BE COMPACTED WITH A VIBRATING PLATE COMPACTOR, EXERTING 5000 LBS. OF CENTRIFUGAL COMPACTION FORCE, WITH SURFACE CLEAN AND JOINTS UNSANDED. A MINIMUM OF THREE PASSES SHALL BE MADE. PLATE VIBRATOR SHALL HAVE A RUBBER MAT OR ROLLER FEET TO AVOID CHIPPING THE PAVERS.
8. JOINT SAND SHALL BE FINER THAN THE BEDDING SAND TO FACILITATE FILLING OF THE JOINTS. THIS CAN BE OBTAINED BY PASSING THE BEDDING SAND THROUGH A No. 8 SIEVE. AFTER THE FIRST PASS OF THE PLATE COMPACTOR, DRY JOINT SAND SHALL BE SWEPT INTO THE JOINTS AND THE PAVERS COMPACTED, REPEAT THE PROCESS UNTIL THE JOINT ARE FILLED WITH SAND. WET SAND SHALL NOT BE INSTALLED.
9. CONTRACTOR SHALL LEAVE TOP OF PAVERS 1/8" ABOVE FINAL ELEVATION TO COMPENSATE FOR POSSIBLE MINOR SETTLING.
10. ALL CUTS TO BE VERTICAL AND TRUE, NO EDGE PIECE TO BE SMALLER THAN 1/3 FULL PAVER SIZE.
11. GEOTEXTILE WOVEN MIRAFI 500X. FABRIC SHALL BE INSTALLED WITHOUT WRINKLES AND LAPPED 3" AT THEIR EDGES.

SECTION

DETAIL 55 / – NTS

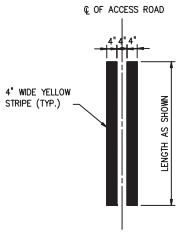

PLAN

DETAIL 54 / – NTS

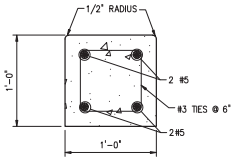

SECTION

DETAIL 56 / – NTS

NO.	DATE	ISSUED FOR	BY

DESIGNED G.A.B.
DRAWN G.P.B.
CHECKED J.N.M.
PROJ. ENGR. G.A.B.

H. J. VIDAL P.E. No. 37882

HAZEN AND SAWYER
Environmental Engineers & Scientists
4000 Hollywood Boulevard, Suite 750N
Hollywood, Florida 33021
Certificate of Authorization Number: 2771

SCALE NTS

CLIENTS PROJECT: –
ENGINEERS PROJECT: 44238-004
CAD REFERENCE: 44238-004BP3-C42

CITY OF NORTH MIAMI
PUBLIC WORKS UTILITIES

WINSON WATER TREATMENT PLANT
BID PACKAGE 3: WTP REHABILITATION
CIVIL DETAILS
SHEET 15

DATE: JUNE 2014
SHEET: 59 OF 335
DRAWING: C-42

PERMITTING

PLOT DATE: 6/10/2014 4:37 PM BY: HS
XREFs= ..\Block\44238-004-BP3-TB
File = H:\44238-004\Drawings\Bid Package 3 - WTP Rehab\Civil\44238-004BP3-C42 Saved by tbocos Save date = 6/9/2014 7:34 PM

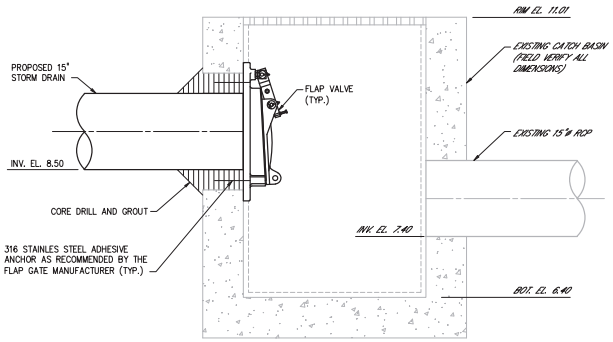

SECTION

CATCH BASIN MODIFICATION

DETAIL 57 / C-15
NTS

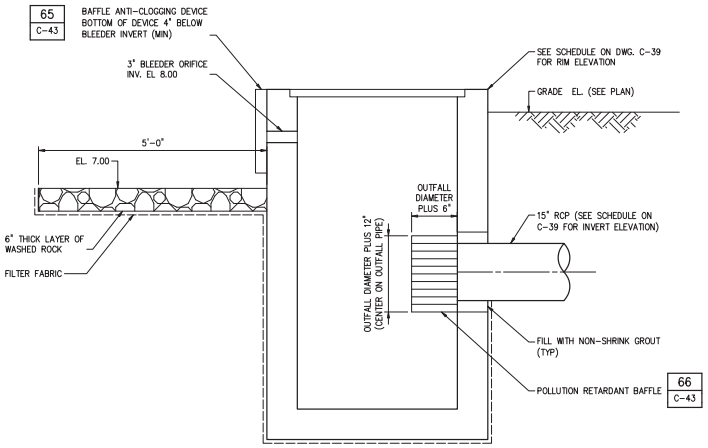

CATCH BASIN 5

DETAIL 64 / C-43
NTS

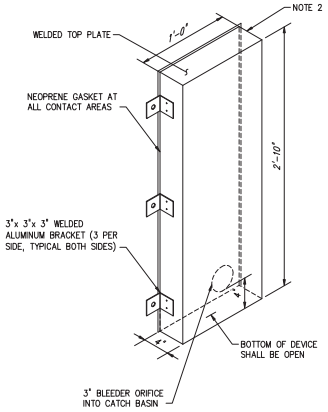

NOTES:

1. DEVICE TO BE BOLTED TO CATCH BASIN USING 1/2"ø 316 STAINLESS STEEL EXPANSION ANCHORS.
2. DEVICE SHALL BE FABRICATED FROM 1/8" THICK WELDED ALUMINUM.

BAFFLE ANTI-CLOGGING DEVICE

DETAIL 65 / C-43
NTS

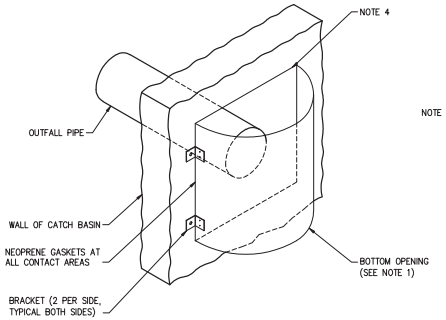

BAFFLE DETAIL

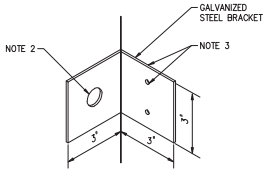

BRACKET DETAIL

NOTES:

1. BAFFLE SHALL BE CORRUGATED METAL PIPE SECTION (OUTFALL DIAMETER PLUS 6").
2. 1/2" GALV. WEDGE ANCHORS.
3. WELD OR 2-3/8" THRU BOLTS.
4. BOLTED TO WALL WITH TOP CAPPED. (WATER TIGHT)

POLLUTION RETARDANDT BAFFLE

DETAIL 66 / C-43
NTS

Szauer Engineering
Civil Engineers
7050 W. Palmetto Park Road, No. 15399
Boca Raton, FL 33433
Certificate of Authorization Number 30129

NO.	DATE	ISSUED FOR	BY

DESIGNED J.M.S.
DRAWN G.P.B.
CHECKED J.N.M.
PROJ. ENGR. J.M.S.

JORGE M. SZAUER P.E.
No. 62579

HAZEN AND SAWYER
Environmental Engineers & Scientists
4000 Hollywood Boulevard, Suite 750N
Hollywood, Florida 33021
Certificate of Authorization Number: 2771

SCALE NTS

CLIENTS PROJECT: –
ENGINEERS PROJECT: 44238-004
CAD REFERENCE: 44238-004BP3-C43

NORTH MIAMI FLORIDA
CITY OF NORTH MIAMI
PUBLIC WORKS UTILITIES

WINSON WATER TREATMENT PLANT
BID PACKAGE 3: WTP REHABILITATION
CIVIL DETAILS
SHEET 16

DATE: JUNE 2014
SHEET: 60 OF 335
DRAWING: C-43

PERMITTING

PLOT DATE: 6/10/2014 4:39 PM BY: HS
XREFs= ..\Tblock\44238-004-BP3-TB
File = H:\44238-004\Drawings\Bid Package 3 - WTP Rehab\Civil\44238-004BP3-C43 Saved by HsCad2 Save date = 6/9/2014 5:33 PM

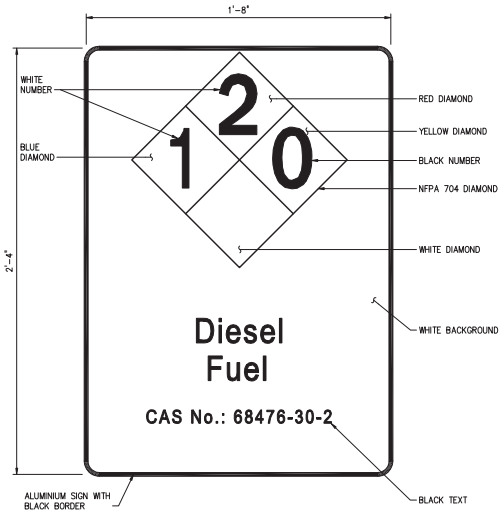

DETAIL 58 / C-11
NTS

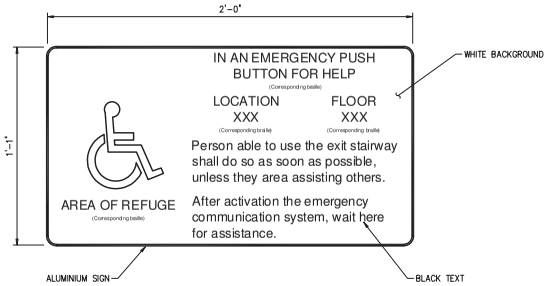

AREA OF REFUGE SIGN AT TWO – WAY COMMUNICATION DEVICE

DETAIL 59 / C-11
NTS

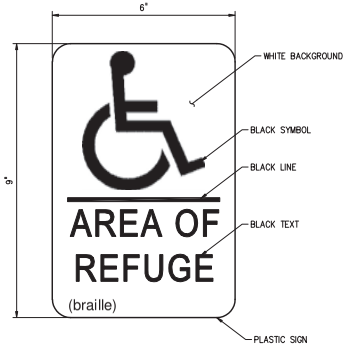

DETAIL 60 / C-11
NTS

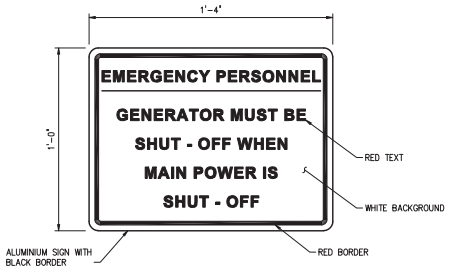

DETAIL 61 / C-11
NTS

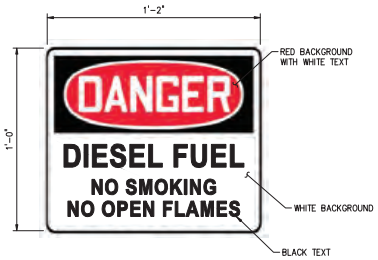

DETAIL 62 / C-11
NTS

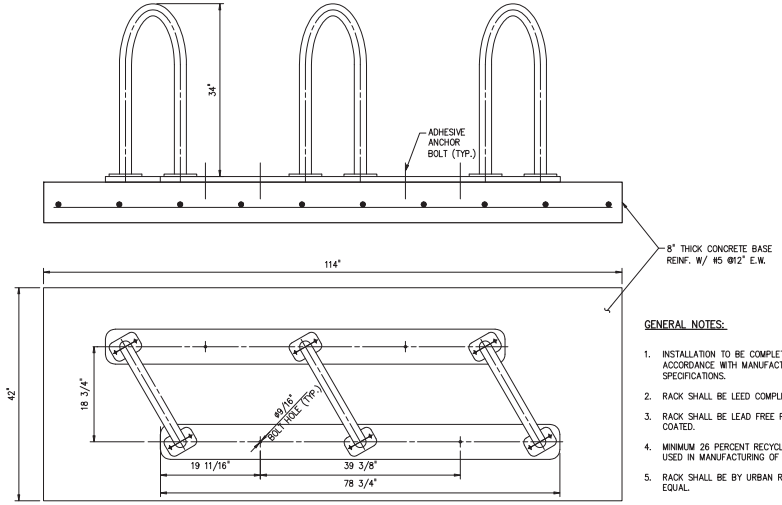

BIKE RACK (4 BIKE MINIMUM CAPACITY)

DETAIL 63 / G-08 | 63 / C-14
NTS

GENERAL NOTES:

1. INSTALLATION TO BE COMPLETED IN ACCORDANCE WITH MANUFACTURES'S SPECIFICATIONS.
2. RACK SHALL BE LEED COMPLIANT.
3. RACK SHALL BE LEAD FREE POWER COATED.
4. MINIMUM 26 PERCENT RECYCLED MATERIAL USED IN MANUFACTURING OF RACK.
5. RACK SHALL BE BY URBAN RACKS, OR EQUAL.

NO.	DATE	ISSUED FOR	BY
1	4/1/14	100% QA COMMENTS	H.J.V.

DESIGNED G.A.B.
DRAWN G.P.B.
CHECKED J.N.M.
PROJ. ENGR. G.A.B.

H. J. VIDAL P.E.
No. 37882

HAZEN AND SAWYER
Environmental Engineers & Scientists
4000 Hollywood Boulevard, Suite 750N
Hollywood, Florida 33021
Certificate of Authorization Number: 2771

SCALE NTS

CLIENTS PROJECT: –
ENGINEERS PROJECT: 44238-004
CAD REFERENCE: 44238-004BP3-C44

NORTH MIAMI FLORIDA
CITY OF NORTH MIAMI
PUBLIC WORKS UTILITIES

WINSON WATER TREATMENT PLANT
BID PACKAGE 3: WTP REHABILITATION
CIVIL DETAILS
SHEET 17

DATE: JUNE 2014
SHEET: 61 OF 335
DRAWING: C-44

PERMITTING

PLOT DATE: 6/10/2014 4:41 PM BY: HS
XREFs= ..\Thlock\44238-004-BP3-TB
File = H:\44238-004\Drawings\Bid Package 3 – WTP Rehab\Civil\44238-004BP3-C44 Saved by HsCad2 Save date = 6/9/2014 8:57 PM

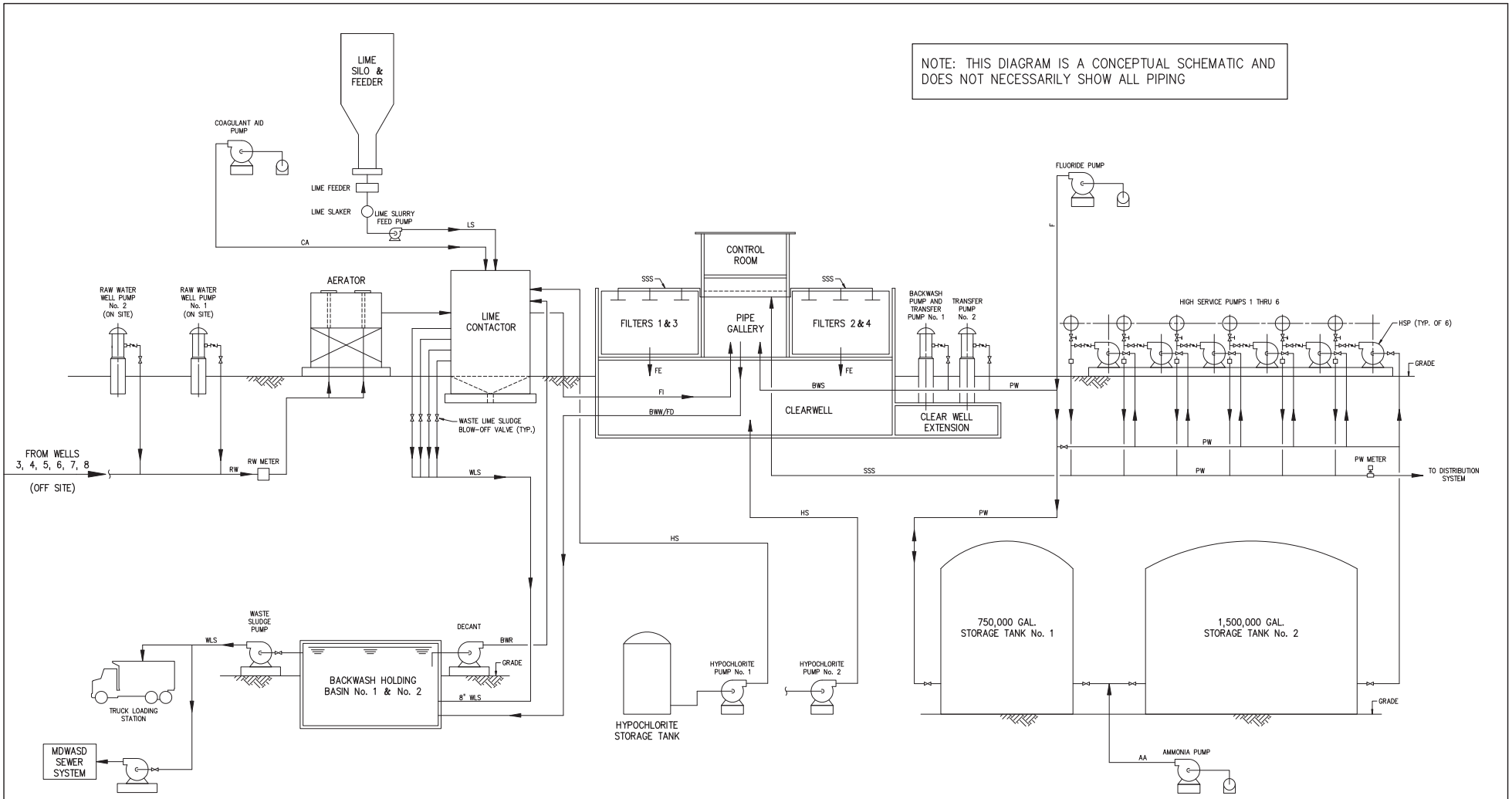

AA	– AQUEOUS AMMONIA	FI	– FILTER INFLUENT
BWR	– BACKWASH RETURN	HS	– HYPOCHLORITE SOLUTION
BWS	– BACKWASH SUPPLY	HSP	– HIGH SERVICE PUMP
BWW	– BACKWASH WASTE	LS	– LIME SLURRY
CA	– COAGULANT AID	PW	– POTABLE WATER
F	– FLUORIDE SOLUTION	RW	– RAW WATER
FD	– FILTER DRAIN	SSS	– SURFACE SCOUR SUPPLY
FE	– FILTER EFFLUENT	WLS	– WASTE LIME SLUDGE

NO.	DATE	ISSUED FOR	BY

DESIGNED G.A.B.
DRAWN G.P.B.
CHECKED G.N.C.
PROJ. ENGR. G.A.B.

H. J. VIDAL P.E.
No. 37882

HAZEN AND SAWYER
Environmental Engineers & Scientists
4000 Hollywood Boulevard, Suite 750N
Hollywood, Florida 33021
Certificate of Authorization Number: 2771

SCALE NTS

CLIENTS PROJECT: –
ENGINEERS PROJECT: 44238-004
CAD REFERENCE: 44238-004BP3-M01

NORTH MIAMI FLORIDA
CITY OF NORTH MIAMI
PUBLIC WORKS UTILITIES

WINSON WATER TREATMENT PLANT
BID PACKAGE 3: WTP REHABILITATION

EXISTING PROCESS FLOW DIAGRAM

DATE: JUNE 2014
SHEET: 62 OF 335
DRAWING: M-01

PERMITTING

PLOT DATE: 6/10/2014 12:46 PM BY: HS
XREFs= ..\Block\44238-004-BP3-TB
File = H:\44238-004\Drawings\Bid Package 3 - WTP Rehab\Mech\44238-004BP3-M01 Saved by HScaff Save date = 6/9/2014 7:27 PM

NOTE: THIS DIAGRAM IS A CONCEPTUAL SCHEMATIC AND DOES NOT NECESSARILY SHOW ALL PIPING

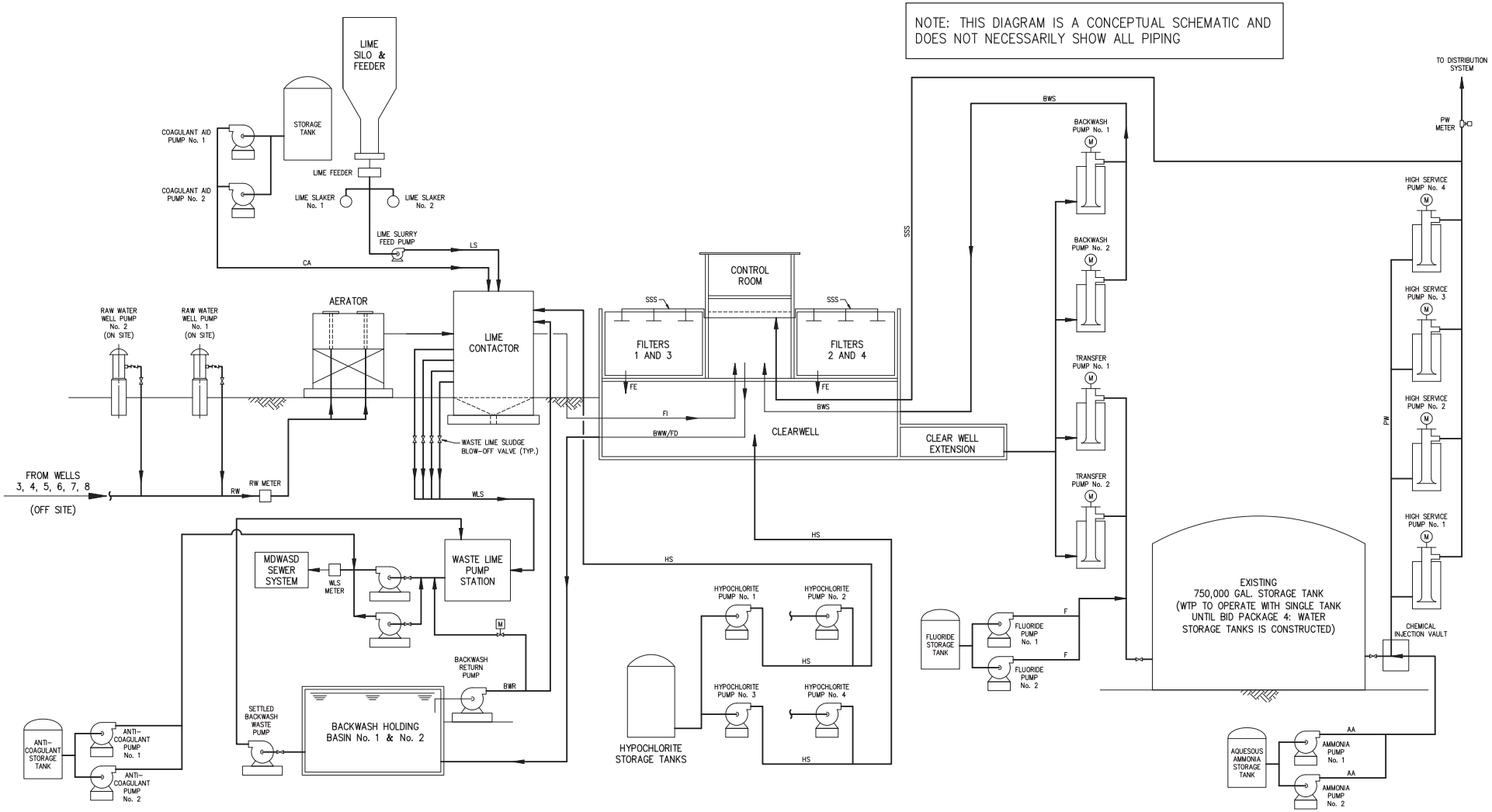

AA – AQUEOUS AMMONIA
BWR – BACKWASH RETURN
BWS – BACKWASH SUPPLY
BWW – BACKWASH WASTE
CA – COAGULANT AID
F – FLUORIDE SOLUTION
FD – FILTER DRAIN
FI – FILTER INFLUENT
FE – FILTER EFFLUENT
HS – HYPOCHLORITE SOLUTION
HSP – HIGH SERVICE PUMP
LS – LIME SLURRY
PW – POTABLE WATER
RW – RAW WATER
SSS – SURFACE SCOUR SUPPLY
WLS – WASTE LIME SLUDGE

LEGEND:
EXISTING
PROPOSED

NO.	DATE	ISSUED FOR	BY

DESIGNED G.A.B.
DRAWN G.P.B.
CHECKED G.N.C.
PROJ. ENGR. G.A.B.

H. J. VIDAL P.E.
No. 37882

HAZEN AND SAWYER
Environmental Engineers & Scientists
4000 Hollywood Boulevard, Suite 750N
Hollywood, Florida 33021
Certificate of Authorization Number: 2771

SCALE NTS

CLIENTS PROJECT: –
ENGINEERS PROJECT: 44238-004
CAD REFERENCE: 44238-004BP3-M02

CITY OF NORTH MIAMI
PUBLIC WORKS UTILITIES

WINSON WATER TREATMENT PLANT
BID PACKAGE 3: WTP REHABILITATION

PROPOSED PROCESS FLOW DIAGRAM

DATE: JUNE 2014
SHEET: 63 OF 335
DRAWING: M-02

PERMITTING

PLOT DATE: 6/10/2014 12:48 PM BY: HS
XREFs= ..\Tblock\44238-004-BP3-TB
File = H:\44238-004\Drawings\Bid Package 3 - WTP Rehab\Mech\44238-004BP3-M02 Saved by HsCad2 Save date = 6/9/2014 8:03 PM

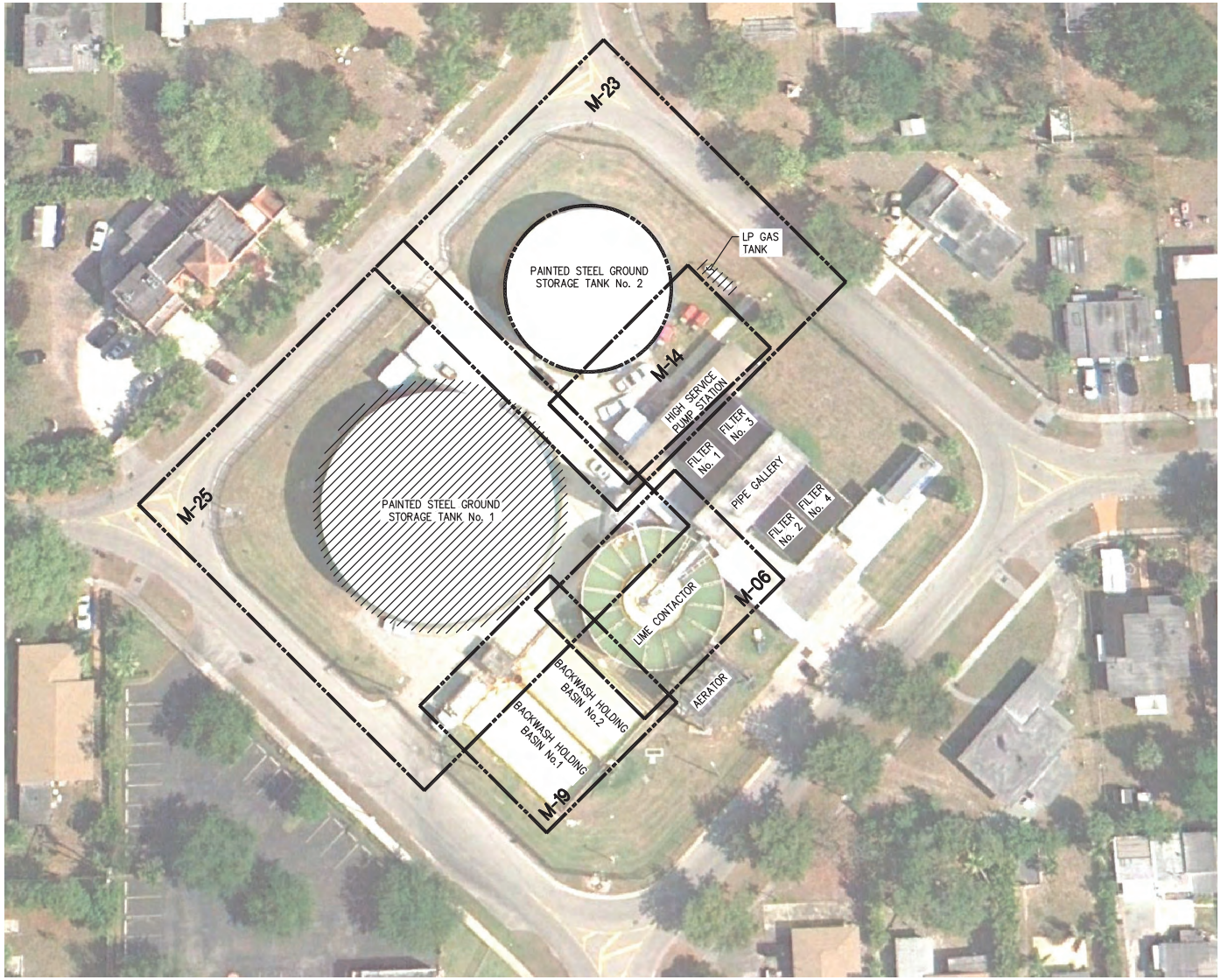

N

GENERAL NOTES:

1. FOR SEQUENCING REQUIREMENTS SEE GENERAL DRAWINGS – PROPOSED STAGING PLANS. ADDITIONALLY, SEE REQUIREMENTS IN SPECIFICATION ENTITLED "SUMMARY OF WORK".

LEGEND:

TO BE REMOVED

PLOT DATE: 6/10/2014 12:50 PM BY: HS

NO.	DATE	ISSUED FOR	BY

XREFs= .\Block\44238-004-BP3-TB

DESIGNED G.A.B.
DRAWN G.P.B.
CHECKED G.N.C.
PROJ. ENGR. G.A.B.

H. J. VIDAL P.E.
No. 37882

HAZEN AND SAWYER
Environmental Engineers & Scientists
4000 Hollywood Boulevard, Suite 750N
Hollywood, Florida 33021
Certificate of Authorization Number: 2771

SCALE NTS

CLIENTS PROJECT: –
ENGINEERS PROJECT: 44238-004
CAD REFERENCE: 44238-004BP3-M03

NORTH MIAMI FLORIDA
CITY OF NORTH MIAMI
PUBLIC WORKS UTILITIES

WINSON WATER TREATMENT PLANT
BID PACKAGE 3: WTP REHABILITATION
DEMOLITION AERIAL PLAN
KEY PLAN

DATE: JUNE 2014
SHEET: 64 OF 335
DRAWING: M-03

PERMITTING

File = H:\44238-004\Drawings\Bid Package 3 - WTP Rehab\Mech\44238-004BP3-M03 Saved by HS Save date = 6/9/2014 9:01 PM

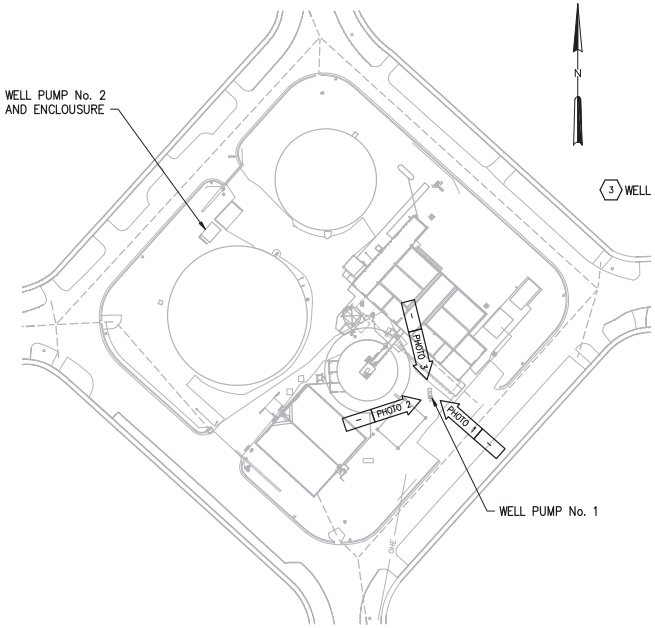

PHOTO ORIENTATION PLAN
NTS

PHOTO 1

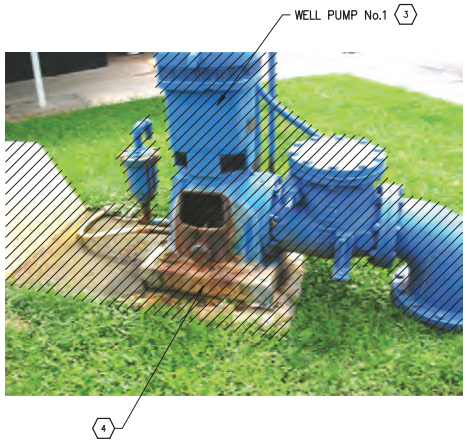

PHOTO 2

PHOTO 3

GENERAL NOTES:

1. NO RECORD DRAWINGS EXIST FOR THIS STRUCTURE AND/OR AREA. PHOTOS PROVIDED FOR GENERAL INFORMATION PURPOSES.
2. THE CONTRACTOR SHALL FIELD VERIFY ALL EXISTING CONDITIONS PRIOR TO BID.
3. CONTRACTOR RETAINS FULL RESPONSIBILITY FOR FIELD VERIFICATION OF ALL ABOVE GROUND IMPROVEMENTS TO BE REMOVED FOR THIS WORK. SUCH VERIFICATION SHALL INCLUDE: STRUCTURAL, ARCHITECTURAL, HVAC, PLUMBING, ELECTRICAL, IRRIGATION, CONTROLS, FREE STANDING EQUIPMENT, LANDSCAPING, AND ANY AND ALL OTHER EXISTING IMPROVEMENTS WITHIN THE BOUNDARY OF THE WORK WHETHER SHOWN HEREIN OR NOT.
4. FOR BELOW GRADE IMPROVEMENTS TO BE REMOVED REFERENCE APPLICABLE CIVIL AND ELECTRICAL DRAWINGS ACCORDINGLY.
5. REFER TO SPECIFICATION SECTION ENTITLED "DEMOLITION OF EXISTING FACILITIES".
6. PRE-BID ACCESS TO THE SITE SHALL BE COORDINATED BY THE CONTRACTOR UPON REQUEST THROUGH A CONTACT TO BE DETERMINED BY THE CITY OF NORTH MIAMI.
7. FOR CONSTRUCTION SEQUENCING RESTRICTIONS FOR THE WORK SHOWN ON THIS SHEET REFERENCE THE SPECIFICATION ENTITLED "SUMMARY OF WORK".
8. FOR REQUIREMENTS RELATED TO DEMOLITION WORK, PROTECTION OF EXISTING FACILITIES AND MAINTENANCE OF OPERATIONS REFERENCE APPLICABLE SPECIFICATIONS IN DIVISION 1.

KEYED NOTES:

1. REMOVE CONDUIT AND ASSOCIATED WIRING THAT SUPPLIES POWER TO THE PUMP MOTOR BACK TO POWER PANEL IN ELECTRICAL ROOM No.1.
2. CUT AND CAP EXISTING RAW WATER PIPE BELOW GRADE. SEE YARD PIPING DRAWINGS.
3. REMOVE PUMP AND MOTOR COMPLETELY.
4. PROTECT THE EXISTING WELL CASING. THE EXISTING WELL CASING SHALL BE MODIFIED AND REUSED TO INSTALL THE PROPOSED PUMP.

LEGEND:

TO BE REMOVED

PHOTO # | DWG # — ARROW INDICATES DIRECTION AND POINT OF VIEW OF PHOTO

NO.	DATE	ISSUED FOR	BY

DESIGNED G.A.B.
DRAWN G.P.B.
CHECKED G.N.C.
PROJ. ENGR. G.A.B.

H. J. VIDAL P.E.
No. 37882

HAZEN AND SAWYER
Environmental Engineers & Scientists
4000 Hollywood Boulevard, Suite 750N
Hollywood, Florida 33021
Certificate of Authorization Number: 2771

SCALE NTS

CLIENTS PROJECT: –
ENGINEERS PROJECT: 44238-004
CAD REFERENCE: 44238-004BP3-M04

NORTH MIAMI FLORIDA
CITY OF NORTH MIAMI
PUBLIC WORKS UTILITIES

WINSON WATER TREATMENT PLANT
BID PACKAGE 3: WTP REHABILITATION
RAW WATER WELL NO. 1
DEMOLITION PLAN AND PHOTOS

DATE: JUNE 2014
SHEET: 65 OF 335
DRAWING: M-04

PERMITTING

PLOT DATE: 6/10/2014 12:55 PM BY: HS
XREFs= ..\Tblock\44238-004-BP3-TB,..\Base-BP3\C-Site-Survey-X
File = H:\44238-004\Drawings\Bid Package 3 - WTP Rehab\Mech\44238-004BP3-M04 Saved by HsCad2 Save date = 6/9/2014 8:56 PM

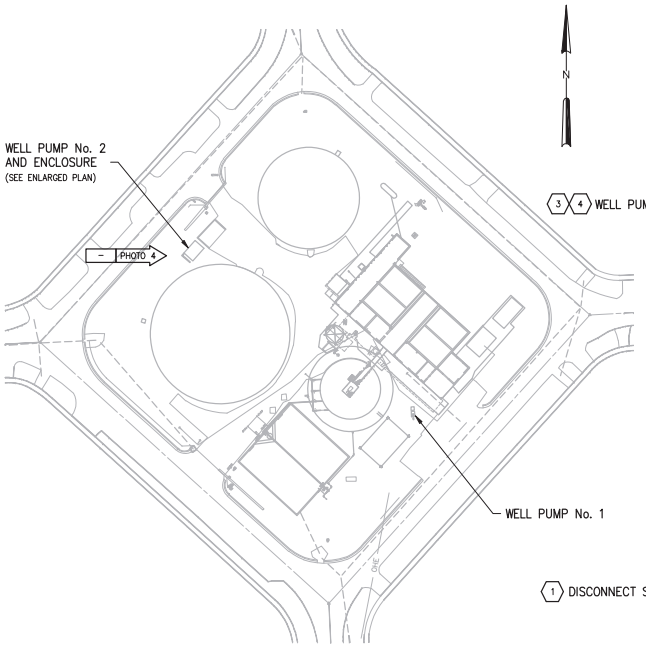

PHOTO ORIENTATION PLAN
NTS

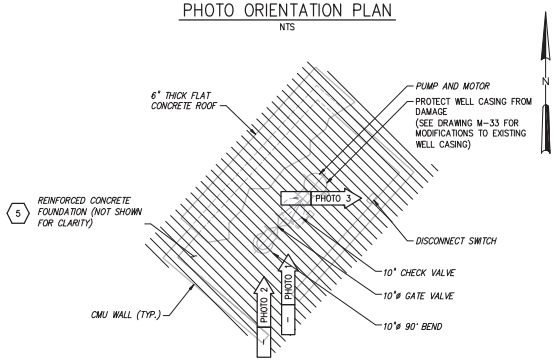

ENCLOUSURE ENLARGED PLAN
NTS

PHOTO 1

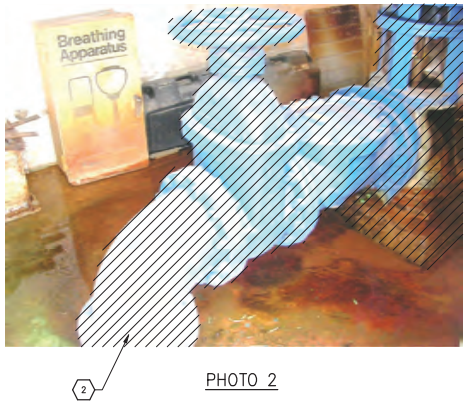

PHOTO 2

PHOTO 3

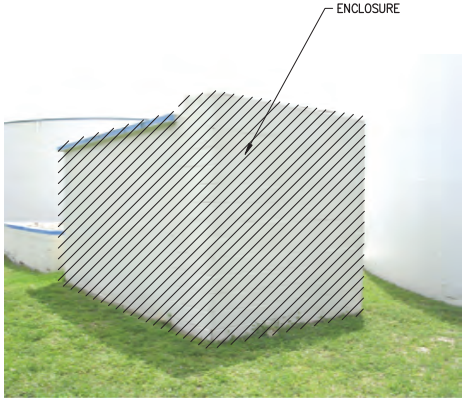

PHOTO 4

GENERAL NOTES:

1. NO RECORD DRAWINGS EXIST FOR THIS STRUCTURE AND/OR AREA, PHOTOS PROVIDED FOR GENERAL INFORMATION PURPOSES.
2. THE CONTRACTOR SHALL FIELD VERIFY ALL EXISTING CONDITIONS PRIOR TO BID.
3. CONTRACTOR RETAINS FULL RESPONSIBILITY FOR FIELD VERIFICATION OF ALL ABOVE GROUND IMPROVEMENTS TO BE REMOVED FOR THIS WORK. SUCH VERIFICATION SHALL INCLUDE: STRUCTURAL, ARCHITECTURAL, HVAC, PLUMBING, ELECTRICAL, IRRIGATION, CONTROLS, FREE STANDING EQUIPMENT, LANDSCAPING, AND ANY AND ALL OTHER EXISTING IMPROVEMENTS WITHIN THE BOUNDARY OF THE WORK WHETHER SHOWN HEREIN OR NOT.
4. FOR BELOW GRADE IMPROVEMENTS TO BE REMOVED REFERENCE APPLICABLE CIVIL AND ELECTRICAL DRAWINGS ACCORDINGLY.
5. REFER TO SPECIFICATION SECTION ENTITLED "DEMOLITION OF EXISTING FACILITIES".
6. PRE-BID ACCESS TO THE SITE SHALL BE COORDINATED BY THE CONTRACTOR UPON REQUEST THROUGH A CONTACT TO BE DETERMINED BY THE CITY OF NORTH MIAMI.
7. FOR CONSTRUCTION SEQUENCING RESTRICTIONS FOR THE WORK SHOWN ON THIS SHEET REFERENCE THE SPECIFICATION ENTITLED "SUMMARY OF WORK".
8. FOR REQUIREMENTS RELATED TO DEMOLITION WORK, PROTECTION OF EXISTING FACILITIES AND MAINTENANCE OF OPERATIONS REFERENCE APPLICABLE SPECIFICATIONS IN DIVISION 1.

KEYED NOTES:

1. REMOVE CONDUIT AND ASSOCIATED WIRING THAT SUPPLIES POWER TO THE PUMP MOTOR BACK TO POWER PANEL IN ELECTRICAL ROOM NO.1.
2. CUT AND CAP EXISTING RAW WATER PIPE BELOW GRADE. SEE YARD PIPING DRAWINGS.
3. REMOVE PUMP AND MOTOR COMPLETELY.
4. PROTECT THE EXISTING WELL CASING. THE EXISTING WELL CASING SHALL BE MODIFIED AND REUSED TO INSTALL THE PROPOSED PUMP.
5. REMOVE FOUNDATION ASSUME FOUNDATION IS 1'-6" THICK REINFORCED CONCRETE AS A MINIMUM.

LEGEND:

TO BE REMOVED

PHOTO # | DWG # — ARROW INDICATES DIRECTION AND POINT OF VIEW OF PHOTO

NO.	DATE	ISSUED FOR	BY

DESIGNED G.A.B.
DRAWN G.P.B.
CHECKED G.N.C.
PROJ. ENGR. G.A.B.

H. J. VIDAL P.E.
No. 37882

HAZEN AND SAWYER
Environmental Engineers & Scientists
4000 Hollywood Boulevard, Suite 750N
Hollywood, Florida 33021
Certificate of Authorization Number: 2771

SCALE NTS

CLIENTS PROJECT: –
ENGINEERS PROJECT: 44238-004
CAD REFERENCE: 44238-004BP3-M05

NORTH MIAMI FLORIDA
CITY OF NORTH MIAMI
PUBLIC WORKS UTILITIES

WINSON WATER TREATMENT PLANT
BID PACKAGE 3: WTP REHABILITATION
RAW WATER WELL NO. 2
DEMOLITION PLAN AND PHOTOS

DATE: JUNE 2014
SHEET: 66 OF 335
DRAWING: M-05

PERMITTING

PLOT DATE: 6/10/2014 12:57 PM BY: IKS
XREFs= ..\Block\44238-004-BP3-TB,..\Base-BP3\C-Site-Survey-X
File = H:\44238-004\Drawings\Bid Package 3 - WTP Rehab\Mech\44238-004BP3-M05 Saved by HsCad2 Save date = 6/9/2014 6:23 PM

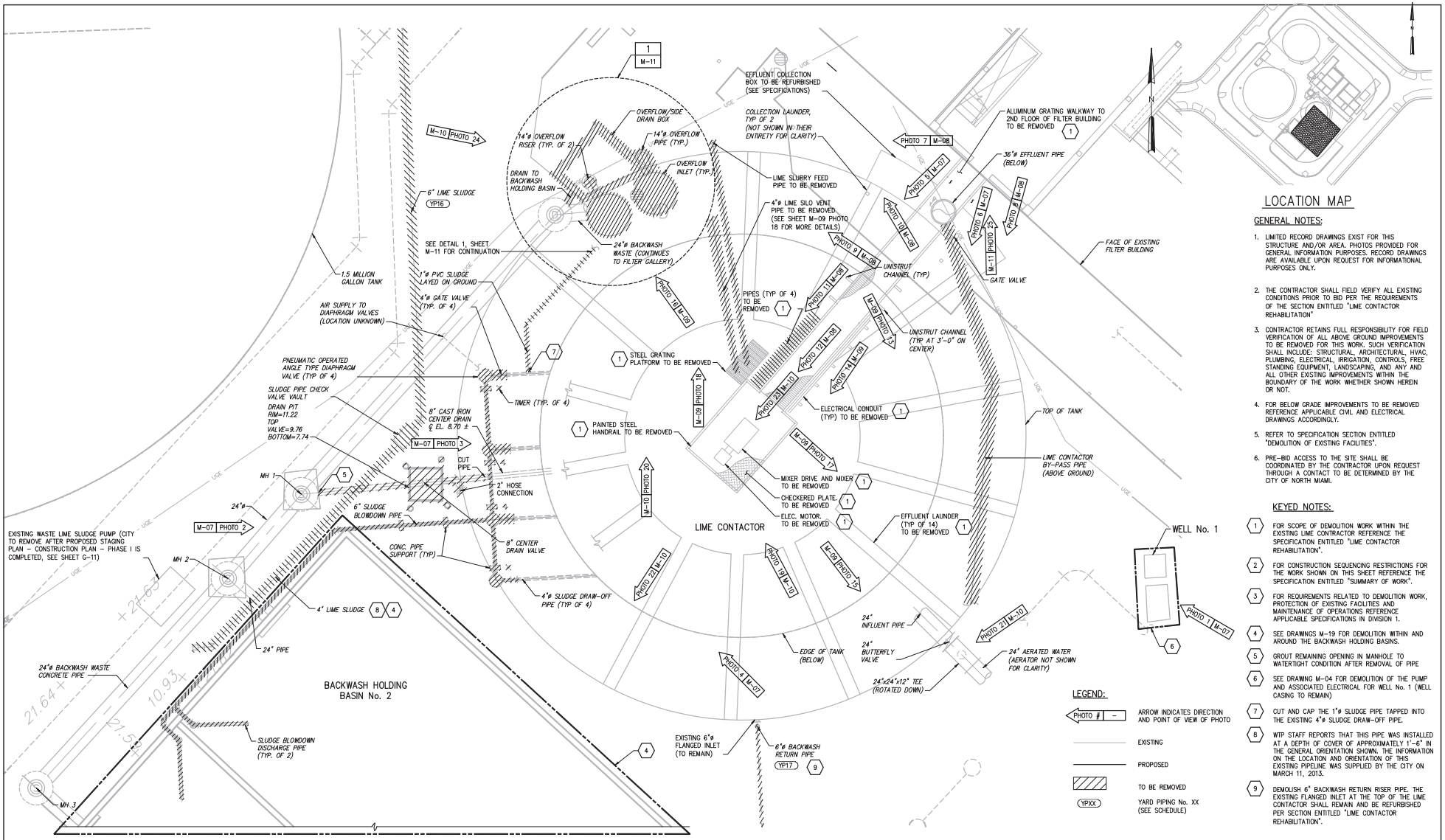

LOCATION MAP

GENERAL NOTES:

1. LIMITED RECORD DRAWINGS EXIST FOR THIS STRUCTURE AND/OR AREA. PHOTOS PROVIDED FOR GENERAL INFORMATION PURPOSES. RECORD DRAWINGS ARE AVAILABLE UPON REQUEST FOR INFORMATIONAL PURPOSES ONLY.
2. THE CONTRACTOR SHALL FIELD VERIFY ALL EXISTING CONDITIONS PRIOR TO BID PER THE REQUIREMENTS OF THE SECTION ENTITLED "LIME CONTACTOR REHABILITATION"
3. CONTRACTOR RETAINS FULL RESPONSIBILITY FOR FIELD VERIFICATION OF ALL ABOVE GROUND IMPROVEMENTS TO BE REMOVED FOR THIS WORK. SUCH VERIFICATION SHALL INCLUDE: STRUCTURAL, ARCHITECTURAL, HVAC, PLUMBING, ELECTRICAL, IRRIGATION, CONTROLS, FREE STANDING EQUIPMENT, LANDSCAPING, AND ANY AND ALL OTHER EXISTING IMPROVEMENTS WITHIN THE BOUNDARY OF THE WORK WHETHER SHOWN HEREIN OR NOT.
4. FOR BELOW GRADE IMPROVEMENTS TO BE REMOVED REFERENCE APPLICABLE CIVIL AND ELECTRICAL DRAWINGS ACCORDINGLY.
5. REFER TO SPECIFICATION SECTION ENTITLED "DEMOLITION OF EXISTING FACILITIES".
6. PRE-BID ACCESS TO THE SITE SHALL BE COORDINATED BY THE CONTRACTOR UPON REQUEST THROUGH A CONTACT TO BE DETERMINED BY THE CITY OF NORTH MIAMI.

KEYED NOTES:

1. FOR SCOPE OF DEMOLITION WORK WITHIN THE EXISTING LIME CONTRACTOR REFERENCE THE SPECIFICATION ENTITLED "LIME CONTACTOR REHABILITATION".
2. FOR CONSTRUCTION SEQUENCING RESTRICTIONS FOR THE WORK SHOWN ON THIS SHEET REFERENCE THE SPECIFICATION ENTITLED "SUMMARY OF WORK".
3. FOR REQUIREMENTS RELATED TO DEMOLITION WORK, PROTECTION OF EXISTING FACILITIES AND MAINTENANCE OF OPERATIONS REFERENCE APPLICABLE SPECIFICATIONS IN DIVISION 1.
4. SEE DRAWINGS M-19 FOR DEMOLITION WITHIN AND AROUND THE BACKWASH HOLDING BASINS.
5. GROUT REMAINING OPENING IN MANHOLE TO WATERTIGHT CONDITION AFTER REMOVAL OF PIPE
6. SEE DRAWING M-04 FOR DEMOLITION OF THE PUMP AND ASSOCIATED ELECTRICAL FOR WELL No. 1 (WELL CASING TO REMAIN)
7. CUT AND CAP THE 1"ø SLUDGE PIPE TAPPED INTO THE EXISTING 4"ø SLUDGE DRAW-OFF PIPE.
8. WTP STAFF REPORTS THAT THIS PIPE WAS INSTALLED AT A DEPTH OF COVER OF APPROXIMATELY 1'-6" IN THE GENERAL ORIENTATION SHOWN. THE INFORMATION ON THE LOCATION AND ORIENTATION OF THIS EXISTING PIPELINE WAS SUPPLIED BY THE CITY ON MARCH 11, 2013.
9. DEMOLISH 6" BACKWASH RETURN RISER PIPE. THE EXISTING FLANGED INLET AT THE TOP OF THE LIME CONTACTOR SHALL REMAIN AND BE REFURBISHED PER SECTION ENTITLED "LIME CONTACTOR REHABILITATION".

LEGEND:

- PHOTO # – ARROW INDICATES DIRECTION AND POINT OF VIEW OF PHOTO
- EXISTING
- PROPOSED
- TO BE REMOVED
- YPXX – YARD PIPING No. XX (SEE SCHEDULE)

3/16"=1'-0" 6 4 2 0 5'

NO.	DATE	ISSUED FOR	BY
1	4/1/14	100% QA COMMENTS	H.J.V.

DESIGNED G.A.B.
DRAWN O.L.C.
CHECKED G.N.C.
PROJ. ENGR. G.A.B.

H. J. VIDAL P.E.
No. 37882

HAZEN AND SAWYER
Environmental Engineers & Scientists
4000 Hollywood Boulevard, Suite 750N
Hollywood, Florida 33021
Certificate of Authorization Number: 2771

SCALE 3/16"=1'-0"

CLIENTS PROJECT: –
ENGINEERS PROJECT: 44238-004
CAD REFERENCE: 44238-004BP3-M06

NORTH MIAMI FLORIDA
CITY OF NORTH MIAMI
PUBLIC WORKS UTILITIES

WINSON WATER TREATMENT PLANT
BID PACKAGE 3: WTP REHABILITATION
LIME CONTACTOR REHABILITATION
DEMOLITION PLAN

DATE: JUNE 2014
SHEET: 67 OF 335
DRAWING: M-06

PERMITTING

PLOT DATE: 6/10/2014 1:02 PM BY: HS

XREFs= ..\Tblock\44238-004-BP3-TB,..\Base-BP3\C-Site-Survey-X,..\Base-BP3\C-Site-YardPiping-Prop,..\Base-BP3\C-Site-Pipe-X,..\Base-BP3\C-BP3-SiteUtility,..\Base-BP3\S-BP1-Filters-Plan-Upper-X,..\Base-BP3\M-BP3-BackwashBasin-Plan,..\base-bp3\M-BP3-Hypochlorite-Plan

File = H:\44238-004\Drawings\Bid Package 3 - WTP Rehab\Mech\44238-004BP3-M06 Saved by HsCad2 Save date = 6/9/2014 6:03 PM

LIME CONTACTOR PHOTO 1
NTS

LIME CONTACTOR PHOTO 2
NTS

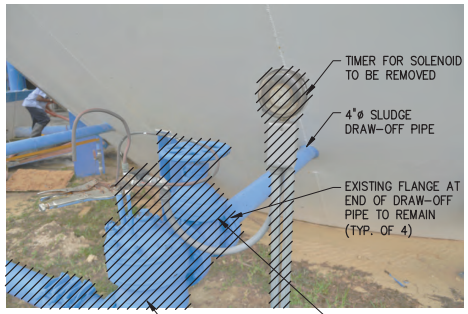

LIME CONTACTOR PHOTO 3
NTS

LIME CONTACTOR PHOTO 4
NTS

LIME CONTACTOR PHOTO 5
NTS

LIME CONTACTOR PHOTO 6
NTS

GENERAL NOTE:

1. REFER TO GENERAL NOTES AND KEYED NOTES ON DRAWING M-06.

KEYED NOTE:

1. PREPARE AND PAINT THE EXTERIOR OF THE LIME CONTACTOR PER THE REQUIREMENTS OF THE SPECIFICATION ENTITLED "PAINTING".

LEGEND:

TO BE REMOVED

NO.	DATE	ISSUED FOR	BY
1	4/1/14	100% QA COMMENTS	H.J.V.

DESIGNED G.A.B.
DRAWN O.L.C.
CHECKED G.N.C.
PROJ. ENGR. G.A.B.

H. J. VIDAL P.E.
No. 37882

HAZEN AND SAWYER
Environmental Engineers & Scientists
4000 Hollywood Boulevard, Suite 750N
Hollywood, Florida 33021
Certificate of Authorization Number: 2771

SCALE NTS

CLIENTS PROJECT: –
ENGINEERS PROJECT: 44238-004
CAD REFERENCE: 44238-004BP3-M07

NORTH MIAMI FLORIDA
CITY OF NORTH MIAMI
PUBLIC WORKS UTILITIES

WINSON WATER TREATMENT PLANT
BID PACKAGE 3: WTP REHABILITATION
LIME CONTACTOR REHABILITATION
DEMOLITION PHOTOS – SHEET 1

DATE: JUNE 2014
SHEET: 68 OF 335
DRAWING: M-07

PERMITTING

PLOT DATE: 6/10/2014 1:12 PM BY: HS
XREFs= .\Block\44238-004-BP3-TB
File = H:\44238-004\Drawings\Bid Package 3 - WTP Rehab\Mech\44238-004BP3-M07 Saved by HsCad2 Save date = 6/9/2014 6:34 PM

LIME CONTACTOR PHOTO 7
NTS

LIME CONTACTOR PHOTO 8
NTS

EFFLUENT COLLECTION BOX TO BE REFURBISHED (SEE SPECIFICATION TITLED "LIME CONTACTOR REHABILITATION")

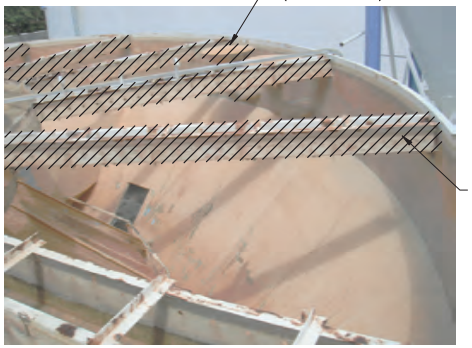

LIME CONTACTOR PHOTO 9
NTS

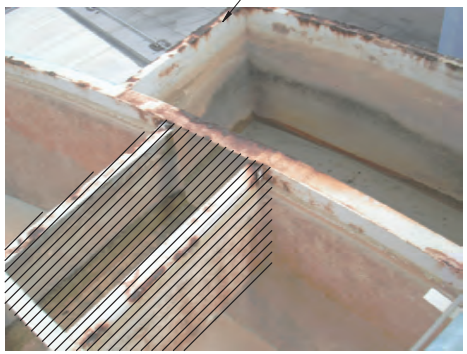

LIME CONTACTOR PHOTO 10
NTS

LIME CONTACTOR PHOTO 11
NTS

LIME CONTACTOR PHOTO 12
NTS

GENERAL NOTE:

1. REFER TO GENERAL NOTES AND KEYED NOTES ON DRAWING M-06.

KEYED NOTE:

(1) REMOVE THE LIME SILO VENT PIPE AND THE LIME SLURRY FEED PIPE AND REPLACE TO MATCH EXISTING.

LEGEND:

TO BE REMOVED

NO.	DATE	ISSUED FOR	BY

DESIGNED G.A.B.
DRAWN O.L.C.
CHECKED G.N.C.
PROJ. ENGR. G.A.B.

H. J. VIDAL P.E.
No. 37882

HAZEN AND SAWYER
Environmental Engineers & Scientists
4000 Hollywood Boulevard, Suite 750N
Hollywood, Florida 33021
Certificate of Authorization Number: 2771

SCALE NTS

CLIENTS PROJECT: –
ENGINEERS PROJECT: 44238-004
CAD REFERENCE: 44238-004BP3-M08

NORTH MIAMI FLORIDA
CITY OF NORTH MIAMI
PUBLIC WORKS UTILITIES

WINSON WATER TREATMENT PLANT
BID PACKAGE 3: WTP REHABILITATION
LIME CONTACTOR REHABILITATION
DEMOLITION PHOTOS – SHEET 2

DATE: JUNE 2014
SHEET: 69 OF 335
DRAWING: M-08

PERMITTING

PLOT DATE: 6/10/2014 1:18 PM BY: HS
XREFs= ..\Tblock\44238-004-BP3-TB
File = H:\44238-004\Drawings\Bid Package 3 - WTP Rehab\Mech\44238-004BP3-M08 Saved by HsCad2 Save date = 6/9/2014 8:20 PM

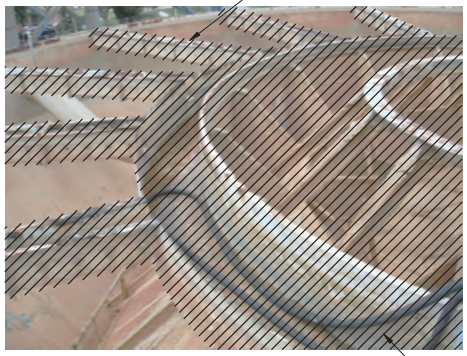

LIME CONTACTOR PHOTO 13
NTS

LIME CONTACTOR PHOTO 14
NTS

LIME CONTACTOR PHOTO 15
NTS

LIME CONTACTOR PHOTO 16
NTS

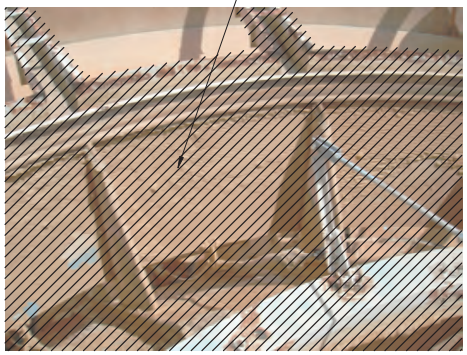

LIME CONTACTOR PHOTO 17
NTS

LIME CONTACTOR PHOTO 18
NTS

GENERAL NOTE:

1. REFER TO GENERAL NOTES AND KEYED NOTES ON DRAWING M-06.

KEYED NOTE:

1. THE INTERIOR WALL OF THE LIME CONTACTOR TANK SHALL BE PREPARED AND PAINTED PER THE SECTION ENTITLED "PAINTING".

LEGEND:

TO BE REMOVED

NO.	DATE	ISSUED FOR	BY

DESIGNED G.A.B.
DRAWN O.L.C.
CHECKED G.N.C.
PROJ. ENGR. G.A.B.

H. J. VIDAL P.E.
No. 37882

HAZEN AND SAWYER
Environmental Engineers & Scientists
4000 Hollywood Boulevard, Suite 750N
Hollywood, Florida 33021
Certificate of Authorization Number: 2771

SCALE NTS

CLIENTS PROJECT: –
ENGINEERS PROJECT: 44238-004
CAD REFERENCE: 44238-004BP3-M09

NORTH MIAMI FLORIDA
CITY OF NORTH MIAMI
PUBLIC WORKS UTILITIES

WINSON WATER TREATMENT PLANT
BID PACKAGE 3: WTP REHABILITATION
LIME CONTACTOR REHABILITATION
DEMOLITION PHOTOS – SHEET 3

DATE: JUNE 2014
SHEET: 70 OF 335
DRAWING: M-09

PERMITTING

PLOT DATE: 6/10/2014 1:21 PM BY: HS
XREFs= .\Tblock\44238-004-BP3-TB
File = H:\44238-004\Drawings\Bid Package 3 - WTP Rehab\Mech\44238-004BP3-M09 Saved by HsCad2 Save date = 6/9/2014 7:38 PM

LIME CONTACTOR PHOTO 19
NTS

LIME CONTACTOR PHOTO 20
NTS

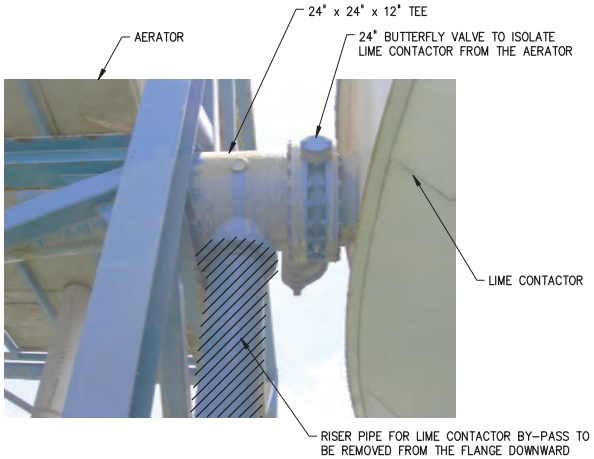

LIME CONTACTOR PHOTO 21
NTS

1 INTERIOR WALL OF LIME
CONTACTOR TANK

LIME CONTACTOR PHOTO 22
NTS

LIME CONTACTOR PHOTO 23
NTS

LIME CONTACTOR PHOTO 24
NTS

GENERAL NOTE:

1. REFER TO THE GENERAL NOTES AND KEYED NOTES ON DRAWING M–06.

KEYED NOTES:

1 THE INTERIOR WALL OF THE LIME CONTACTOR TANK SHALL BE PREPARED AND PAINTED PER THE SECTION ENTITLED "PAINTING".

LEGEND:

TO BE REMOVED

NO.	DATE	ISSUED FOR	BY

DESIGNED G.A.B
DRAWN O.L.C.
CHECKED G.N.C.
PROJ. ENGR. G.A.B.

H. J. VIDAL P.E.
No. 37882

HAZEN AND SAWYER
Environmental Engineers & Scientists
4000 Hollywood Boulevard, Suite 750N
Hollywood, Florida 33021
Certificate of Authorization Number: 2771

SCALE NTS

CLIENTS PROJECT: –
ENGINEERS PROJECT: 44238–004
CAD REFERENCE: 44238–004BP3–M10

NORTH MIAMI FLORIDA
CITY OF NORTH MIAMI
PUBLIC WORKS UTILITIES

WINSON WATER TREATMENT PLANT
BID PACKAGE 3: WTP REHABILITATION
LIME CONTACTOR REHABILITATION
DEMOLITION PHOTOS – SHEET 4

DATE: JUNE 2014
SHEET: 71 OF 335
DRAWING: M–10

PERMITTING

PLOT DATE: 6/10/2014 1:24 PM BY: HS
XREFs= ..\Block\44238–004–BP3–TB
File = H:\44238–004\Drawings\Bid Package 3 – WTP Rehab\Mech\44238–004BP3–M10 Saved by HScalf Save date = 6/9/2014 8:52 PM

LIME CONTACTOR PHOTO 25
NTS

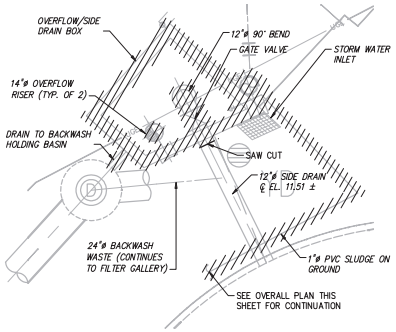

OVERFLOW / SIDE DRAIN BASIN AT EL. 12.00±

DETAIL 1 / M-06
1/4" = 1'-0"

GENERAL NOTE:

1. REFER TO THE GENERAL NOTES AND KEYED NOTES ON DRAWING M-06.

LEGEND:

TO BE REMOVED

1/4"=1'-0" 1 0 1 2 3 7'

NO.	DATE	ISSUED FOR	BY
1	4/1/14	100% QA COMMENTS	H.J.V.

DESIGNED G.A.B.
DRAWN G.P.B.
CHECKED G.N.C.
PROJ. ENGR. G.A.B.

H. J. VIDAL P.E.
No. 37882

HAZEN AND SAWYER
Environmental Engineers & Scientists
4000 Hollywood Boulevard, Suite 750N
Hollywood, Florida 33021
Certificate of Authorization Number: 2771

SCALE: AS NOTED

CLIENTS PROJECT: –
ENGINEERS PROJECT: 44238-004
CAD REFERENCE: 44238-004BP3-M11

NORTH MIAMI FLORIDA
CITY OF NORTH MIAMI
PUBLIC WORKS UTILITIES

WINSON WATER TREATMENT PLANT
BID PACKAGE 3: WTP REHABILITATION
LIME CONTACTOR REHABILITATION
DEMOLITION PHOTOS – SHEET 5

DATE: JUNE 2014
SHEET: 72 OF 335
DRAWING: M-11

PERMITTING

PLOT DATE: 6/10/2014 1:28 PM BY: HS

XREFs= ..\Block\44238-004-BP3-TB,..\Base-BP3\C-Site-Survey-X,..\Base-BP3\C-Site-YardPiping-Prop,..\Base-BP3\C-Site-Pipe-X,..\Base-BP3\M-BP3-BackwashBasin-Plan,..\base-bp3\M-BP3-Hypochlorite-Plan

File = H:\44238-004\Drawings\Bid Package 3 - WTP Rehab\Mech\44238-004BP3-M11 Saved by HsCad2 Save date = 6/9/2014 6:28 PM

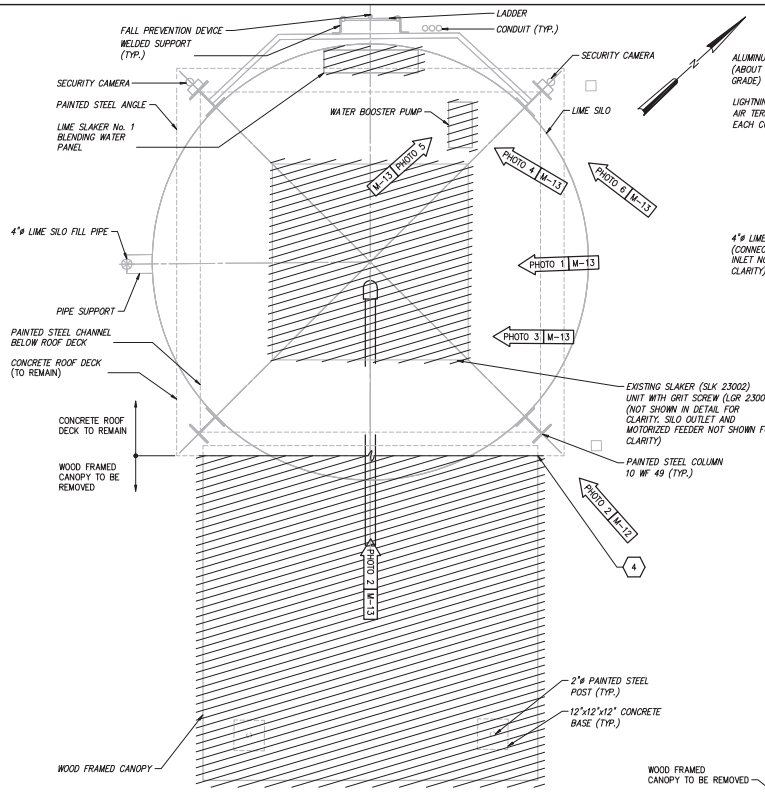

LOWER PLAN
1/2" = 1'-0"

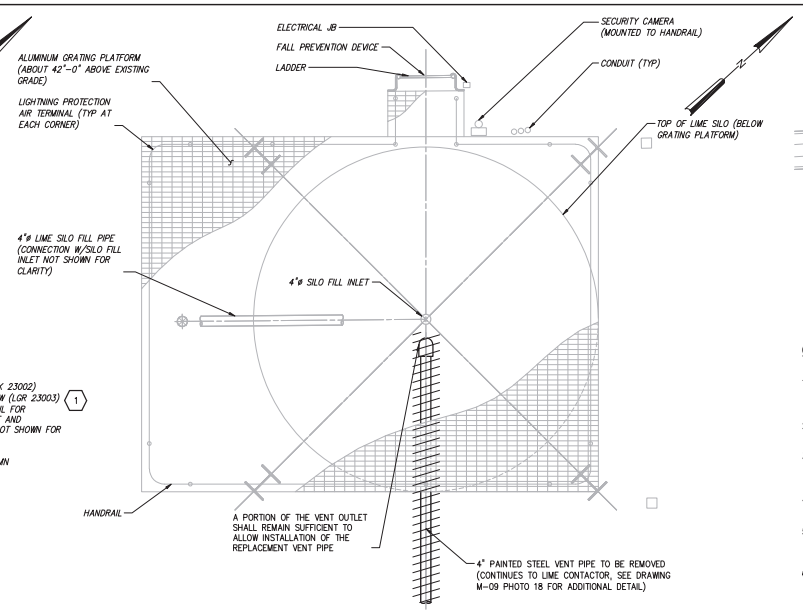

UPPER PLAN
1/2" = 1'-0"

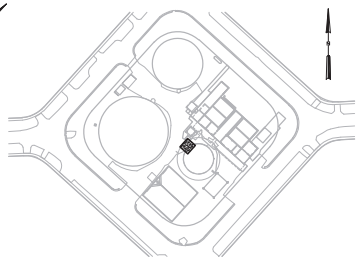

LOCATION MAP

GENERAL NOTES:

1. DUE TO LACK OF RECORD DRAWINGS, PIPING BETWEEN COMPONENTS IS NOT SHOWN. CONTRACTOR/SUPPLIER SHALL FIELD VERIFY PER REQUIREMENTS OF THE SECTION ENTITLED "LIME SLAKER SYSTEM UPGRADES".
2. FOR PURPOSES OF THIS EFFORT, SELECT EXISTING CONDITION PHOTOGRAPHS HAVE BEEN INCLUDED IN THIS CONTRACT DOCUMENT SET.
3. THE CONTRACTOR SHALL FIELD VERIFY ALL EXISTING CONDITIONS PRIOR TO BID PER THE REQUIREMENTS OF THE SECTION ENTITLED "LIME SLAKER SYSTEM UPGRADES".
4. ITEMS SHALL BE REMOVED, REFURBISHED, STORED AND REINSTALLED PER REQUIREMENTS IN THE SECTION ENTITLED "LIME SLAKER SYSTEM UPGRADES":
5. ALL OTHER EXISTING EQUIPMENT AND ASSOCIATED CONNECTORS, PIPING, VALVES, INSTRUMENTS, AND ELECTRICAL IMPROVEMENTS SHALL BE REPLACED AS DESCRIBED IN THE SECTION ENTITLED "LIME SLAKER SYSTEM UPGRADES".
6. STRUCTURAL IMPROVEMENTS SHALL BE AS SHOWN ON THE STRUCTURAL DRAWINGS AND INCLUDE THE FOLLOWING:
   a. REMOVAL OF REINFORCED CONCRETE HOUSEKEEPING PADS AND EQUIPMENT ANCHORS.
   b. REPAIR TO CONCRETE SLAB AFTER REMOVAL OF HOUSEKEEPING PADS PER THE REQUIREMENTS OF DIVISIONS 1 AND 3.
   c. LAYOUT OF NEW ANCHORING SYSTEM AND HOUSEKEEPING PADS AS DIRECTED BY THE SUPPLIER AND AS SHOWN ON THE STRUCTURAL DRAWINGS.
7. PRE-BID ACCESS TO THE SITE SHALL BE COORDINATED BY THE CONTRACTOR UPON REQUEST THROUGH A CONTACT TO BE DETERMINED BY THE CITY OF NORTH MIAMI.

WOOD CANOPY DEMO – PHOTO 1
NTS

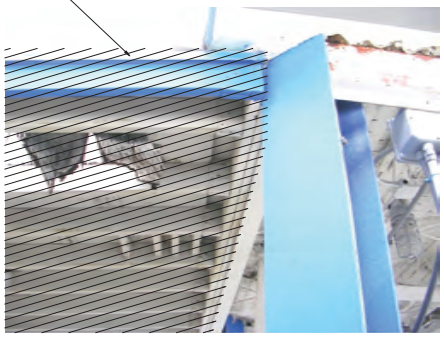

WOOD CANOPY DEMO – PHOTO 2
NTS

KEYED NOTES:

1. FOR SCOPE OF WORK WITHIN THE AREA OF THE EXISTING LIME SLAKER, REFERENCE THE SPECIFICATION ENTITLED "LIME SLAKER SYSTEM UPGRADES".
2. FOR CONSTRUCTION SEQUENCING RESTRICTIONS FOR THE WORK SHOWN ON THIS SHEET REFERENCE THE SPECIFICATIONS ENTITLED "SUMMARY OF WORK".
3. FOR REQUIREMENTS RELATED TO DEMOLITION WORK, PROTECTION OF EXISTING FACILITIES AND MAINTENANCE OF OPERATIONS REFERENCE APPLICABLE SPECIFICATIONS IN DIVISION 1.
4. LIMITS OF DEMOLITION BETWEEN WOOD FRAMED CANOPY AND LIME SILO STRUCTURE SHALL BE AGREED UPON WITH ENGINEER AND OWNER PRIOR TO COMMENCING DEMOLITION.

LEGEND:

PHOTO # – ARROW INDICATES DIRECTION AND POINT OF VIEW OF PHOTO

EXISTING

TO BE REMOVED

1/2"=1'-0" 12" 0 1 3'

NO.	DATE	ISSUED FOR	BY

DESIGNED G.A.B.
DRAWN G.P.B.
CHECKED G.N.C.
PROJ. ENGR. G.A.B.

H. J. VIDAL P.E.
No. 37882

HAZEN AND SAWYER
Environmental Engineers & Scientists
4000 Hollywood Boulevard, Suite 750N
Hollywood, Florida 33021
Certificate of Authorization Number: 2771

SCALE: AS NOTED

CLIENTS PROJECT: –
ENGINEERS PROJECT: 44238-004
CAD REFERENCE: 44238-004BP3-M12

NORTH MIAMI FLORIDA
CITY OF NORTH MIAMI
PUBLIC WORKS UTILITIES

WINSON WATER TREATMENT PLANT
BID PACKAGE 3: WTP REHABILITATION
LIME SLAKER AND SILO MODIFICATIONS
DEMOLITION PLAN

DATE: JUNE 2014
SHEET: 73 OF 335
DRAWING: M-12

PERMITTING

PLOT DATE: 6/10/2014 1:30 PM BY: HS

XREFs= ..\Titleck\44238-004-BP3-TB,..\Base-BP3\C-Site-Survey-X,..\Base-BP3\M-BP3-LimeSilo-Plans-X

File = H:\44238-004\Drawings\Bid Package 3 - WTP Rehab\Mech\44238-004BP3-M12 Saved by HScaff Save date = 6/9/2014 6:42 PM

LIME SLAKER PHOTO 1
NTS

LIME SLAKER PHOTO 2
NTS

LIME SLAKER PHOTO 3
NTS

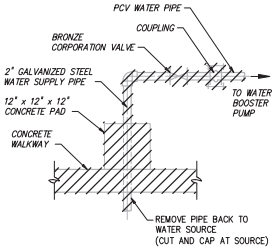

DETAIL 1
NTS –

LIME SLAKER PHOTO 4
NTS

LIME SLAKER PHOTO 5
NTS

LIME SLAKER PHOTO 6
NTS

LIME SLAKER PHOTO 7
NTS

GENERAL NOTE:

1. REFERENCE THE SECTION ENTITLED "LIME SLAKER SYSTEM UPGRADES" FOR COMPLETE.
2. REFERENCE THE GENERAL NOTES AND KEYED NOTES ON DRAWING M-12.

LEGEND:

TO BE REMOVED

NO.	DATE	ISSUED FOR	BY
1	4/1/14	100% QA COMMENTS	H.J.V.

DESIGNED G.A.B.
DRAWN G.P.B.
CHECKED G.N.C.
PROJ. ENGR. G.A.B.

H. J. VIDAL P.E.
No. 37882

HAZEN AND SAWYER
Environmental Engineers & Scientists
4000 Hollywood Boulevard, Suite 750N
Hollywood, Florida 33021
Certificate of Authorization Number: 2771

SCALE: AS NOTED

CLIENTS PROJECT: –
ENGINEERS PROJECT: 44238-004
CAD REFERENCE: 44238-004BP3-M13

NORTH MIAMI FLORIDA
CITY OF NORTH MIAMI
PUBLIC WORKS UTILITIES

WINSON WATER TREATMENT PLANT
BID PACKAGE 3: WTP REHABILITATION
LIME SLAKER AND SILO MODIFICATIONS DEMOLITION PHOTOS

DATE: JUNE 2014
SHEET: 74 OF 335
DRAWING: M-13

PERMITTING

PLOT DATE: 6/10/2014 1:38 PM BY: HS
XREFs= ..\Tblock\44238-004-BP3-TB
File = H:\44238-004\Drawings\Bid Package 3 - WTP Rehab\Mech\44238-004BP3-M13 Saved by HsCol2 Save date = 6/9/2014 8:51 PM

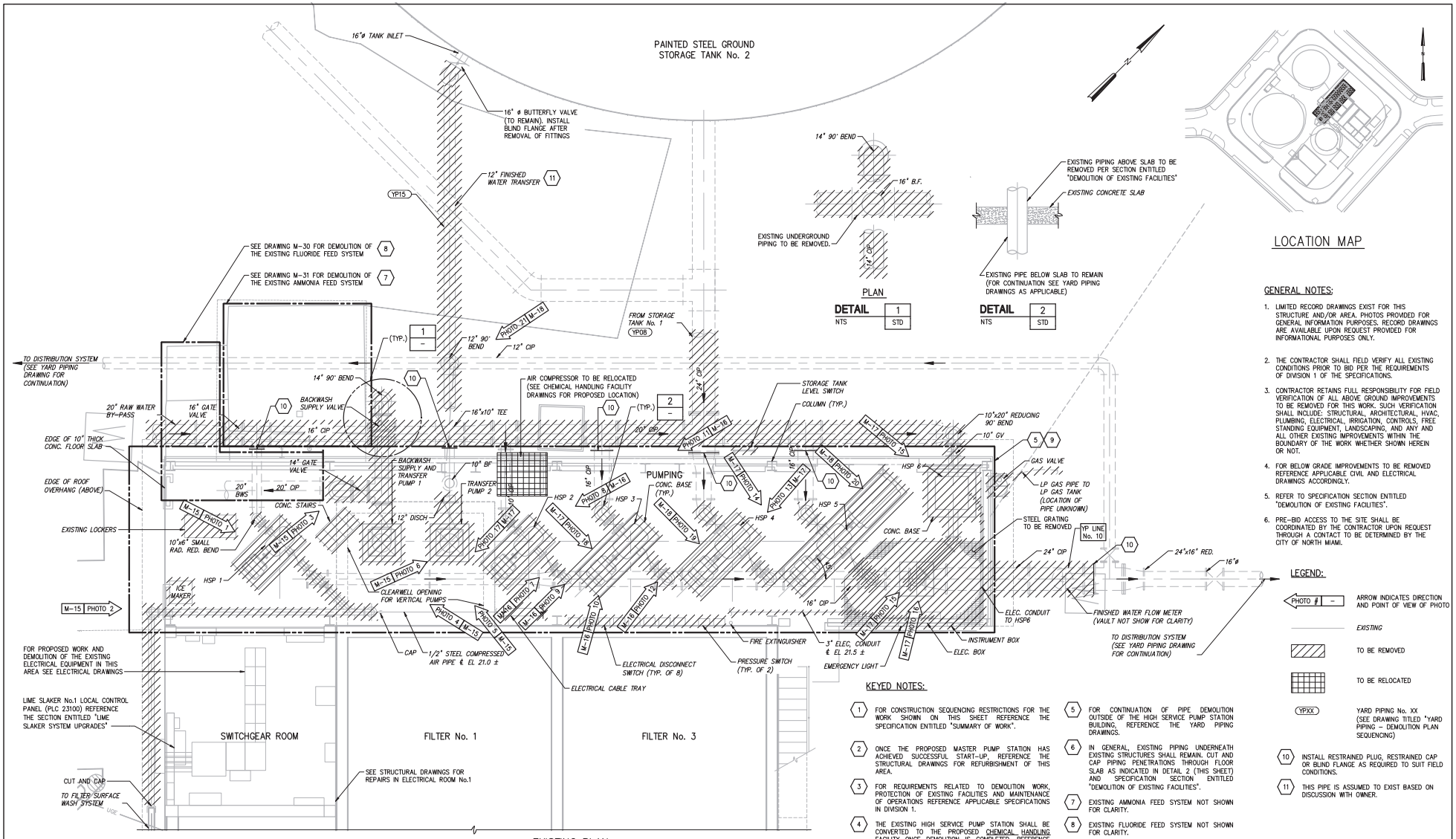

GENERAL NOTES:

1. LIMITED RECORD DRAWINGS EXIST FOR THIS STRUCTURE AND/OR AREA. PHOTOS PROVIDED FOR GENERAL INFORMATION PURPOSES. RECORD DRAWINGS ARE AVAILABLE UPON REQUEST PROVIDED FOR INFORMATIONAL PURPOSES ONLY.
2. THE CONTRACTOR SHALL FIELD VERIFY ALL EXISTING CONDITIONS PRIOR TO BID PER THE REQUIREMENTS OF DIVISION 1 OF THE SPECIFICATIONS.
3. CONTRACTOR RETAINS FULL RESPONSIBILITY FOR FIELD VERIFICATION OF ALL ABOVE GROUND IMPROVEMENTS TO BE REMOVED FOR THIS WORK. SUCH VERIFICATION SHALL INCLUDE: STRUCTURAL, ARCHITECTURAL, HVAC, PLUMBING, ELECTRICAL, IRRIGATION, CONTROLS, FREE STANDING EQUIPMENT, LANDSCAPING, AND ANY AND ALL OTHER EXISTING IMPROVEMENTS WITHIN THE BOUNDARY OF THE WORK WHETHER SHOWN HEREIN OR NOT.
4. FOR BELOW GRADE IMPROVEMENTS TO BE REMOVED REFERENCE APPLICABLE CIVIL AND ELECTRICAL DRAWINGS ACCORDINGLY.
5. REFER TO SPECIFICATION SECTION ENTITLED "DEMOLITION OF EXISTING FACILITIES".
6. PRE-BID ACCESS TO THE SITE SHALL BE COORDINATED BY THE CONTRACTOR UPON REQUEST THROUGH A CONTACT TO BE DETERMINED BY THE CITY OF NORTH MIAMI.

KEYED NOTES:

1. FOR CONSTRUCTION SEQUENCING RESTRICTIONS FOR THE WORK SHOWN ON THIS SHEET REFERENCE THE SPECIFICATION ENTITLED "SUMMARY OF WORK".
2. ONCE THE PROPOSED MASTER PUMP STATION HAS ACHIEVED SUCCESSFUL START-UP, REFERENCE THE STRUCTURAL DRAWINGS FOR REFURBISHMENT OF THIS AREA.
3. FOR REQUIREMENTS RELATED TO DEMOLITION WORK, PROTECTION OF EXISTING FACILITIES AND MAINTENANCE OF OPERATIONS REFERENCE APPLICABLE SPECIFICATIONS IN DIVISION 1.
4. THE EXISTING HIGH SERVICE PUMP STATION SHALL BE CONVERTED TO THE PROPOSED CHEMICAL HANDLING FACILITY. ONCE DEMOLITION IS COMPLETED, REFERENCE APPLICABLE MECHANICAL, STRUCTURAL, ARCHITECTURAL, ELECTRICAL, HVAC AND INSTRUMENTATION DRAWINGS FOR PROPOSED IMPROVEMENTS.
5. FOR CONTINUATION OF PIPE DEMOLITION OUTSIDE OF THE HIGH SERVICE PUMP STATION BUILDING, REFERENCE THE YARD PIPING DRAWINGS.
6. IN GENERAL, EXISTING PIPING UNDERNEATH EXISTING STRUCTURES SHALL REMAIN. CUT AND CAP PIPING PENETRATIONS THROUGH FLOOR SLAB AS INDICATED IN DETAIL 2 (THIS SHEET) AND SPECIFICATION SECTION ENTITLED "DEMOLITION OF EXISTING FACILITIES".
7. EXISTING AMMONIA FEED SYSTEM NOT SHOWN FOR CLARITY.
8. EXISTING FLUORIDE FEED SYSTEM NOT SHOWN FOR CLARITY.
9. FOR STRUCTURAL DEMOLITION REQUIREMENTS REFERENCE TO STRUCTURAL DRAWINGS.

LEGEND:

- PHOTO # – ARROW INDICATES DIRECTION AND POINT OF VIEW OF PHOTO
- EXISTING
- TO BE REMOVED
- TO BE RELOCATED
- YPXX YARD PIPING No. XX (SEE DRAWING TITLED "YARD PIPING – DEMOLITION PLAN SEQUENCING)
- 10 INSTALL RESTRAINED PLUG, RESTRAINED CAP OR BLIND FLANGE AS REQUIRED TO SUIT FIELD CONDITIONS.
- 11 THIS PIPE IS ASSUMED TO EXIST BASED ON DISCUSSION WITH OWNER.

1/4"=1'-0" 1 0 1 2 3 7'

NO.	DATE	ISSUED FOR	BY
1	4/1/14	100% QA COMMENTS	H.J.V.

DESIGNED G.A.B.
DRAWN G.P.B.
CHECKED G.N.C.
PROJ. ENGR. G.A.B.

H. J. VIDAL P.E. No. 37882

HAZEN AND SAWYER
Environmental Engineers & Scientists
4000 Hollywood Boulevard, Suite 750N
Hollywood, Florida 33021
Certificate of Authorization Number: 2771

SCALE: AS NOTED

CLIENTS PROJECT: –
ENGINEERS PROJECT: 44238-004
CAD REFERENCE: 44238-004BP3-M14

NORTH MIAMI FLORIDA — CITY OF NORTH MIAMI PUBLIC WORKS UTILITIES

WINSON WATER TREATMENT PLANT
BID PACKAGE 3: WTP REHABILITATION

HIGH SERVICE PUMP STATION DEMOLITION PLAN

DATE: JUNE 2014
SHEET: 75 OF 335
DRAWING: M-14

PERMITTING

PLOT DATE: 6/10/2014 1:41 PM BY: HS

XREFs= ..\Base-BP3\M-BP1-Filters-Plan-Bottom-X,..\Base-BP3\S-BP1-Filters-Plan-Bottom-X,..\Tblock\44238-004-BP3-TB,..\Base-BP3\C-Site-Survey-X,..\Base-BP3\C-Site-Pipe-X

File = H:\44238-004\Drawings\Bid Package 3 - WTP Rehab\Mech\44238-004BP3-M14 Saved by HsCol2 Save date = 6/9/2014 8:14 PM

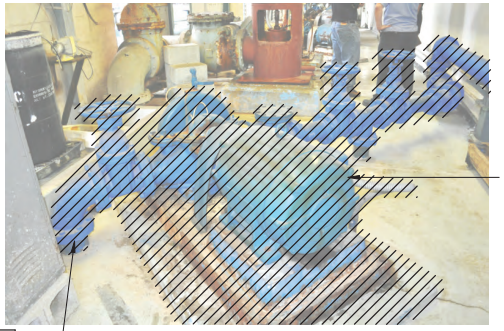

PUMP STATION PHOTO 1
NTS

PUMP STATION PHOTO 2
NTS

PUMP STATION PHOTO 3
NTS

PUMP STATION PHOTO 4
NTS

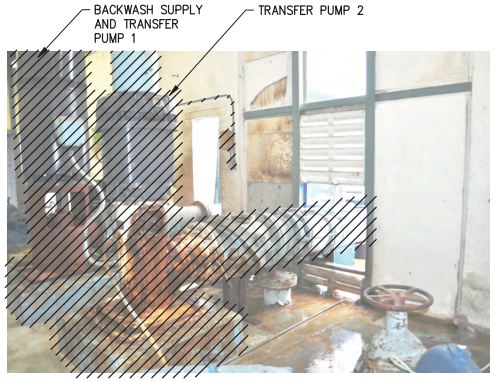

PUMP STATION PHOTO 5
NTS

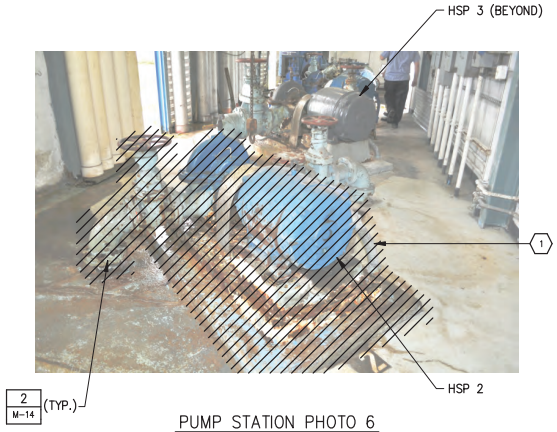

PUMP STATION PHOTO 6
NTS

GENERAL NOTE:

1. REFER TO THE GENERAL NOTES AND KEYED NOTES ON DRAWING M-14.

KEYED NOTES:

1. CUT ELECTRICAL CONDUIT 1-INCH BELOW CONCRETE SURFACE. REMOVE ALL EXISTING CABLES BACK TO SOURCE. REMOVE ALL EXPOSED CONDUIT AND PATCH CONCRETE. TYPICAL FOR ALL CONDUIT PENETRATIONS FOR EACH PUMP.
2. EXISTING LIGHTING NOT SHOWN IN ITS ENTIRETY FOR CLARITY. REMOVE ALL EXISTING LIGHTS AND ASSOCIATED CONDUITS, WIRES, JUNCTION BOXES AND SWITCHES. REMOVE WIRES BACK TO THE SOURCE.

LEGEND:

TO BE REMOVED

NO.	DATE	ISSUED FOR	BY

DESIGNED G.A.B.
DRAWN G.P.B.
CHECKED G.N.C.
PROJ. ENGR. G.A.B.

H. J. VIDAL P.E.
No. 37882

HAZEN AND SAWYER
Environmental Engineers & Scientists
4000 Hollywood Boulevard, Suite 750N
Hollywood, Florida 33021
Certificate of Authorization Number: 2771

SCALE NTS

CLIENTS PROJECT: –
ENGINEERS PROJECT: 44238-004
CAD REFERENCE: 44238-004BP3-M15

NORTH MIAMI FLORIDA
CITY OF NORTH MIAMI
PUBLIC WORKS UTILITIES

WINSON WATER TREATMENT PLANT
BID PACKAGE 3: WTP REHABILITATION
HIGH SERVICE PUMP STATION
DEMOLITION PHOTOS – SHEET 1

DATE: JUNE 2014
SHEET: 76 OF 335
DRAWING: M-15

PERMITTING

PLOT DATE: 6/10/2014 1:47 PM BY: HS
XREFs= ..\Block\44238-004-BP3-TB
File = H:\44238-004\Drawings\Bid Package 3 - WTP Rehab\Mech\44238-004BP3-M15 Saved by HScalf Save date = 6/9/2014 5:34 PM

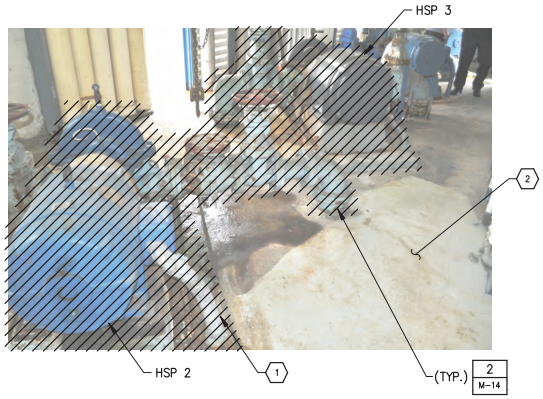

PUMP STATION PHOTO 7
NTS

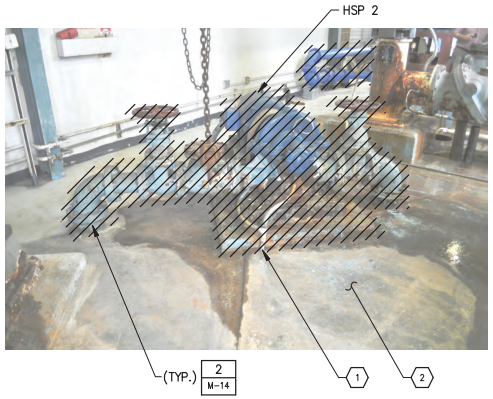

PUMP STATION PHOTO 8
NTS

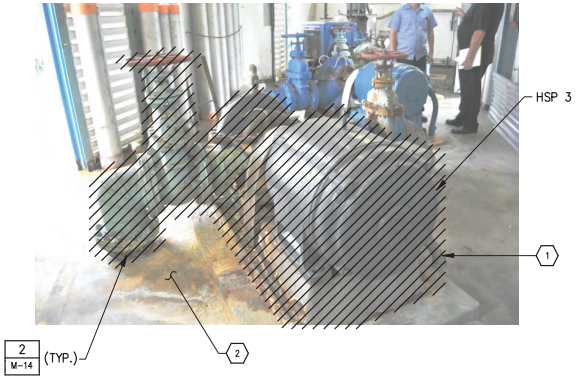

PUMP STATION PHOTO 9
NTS

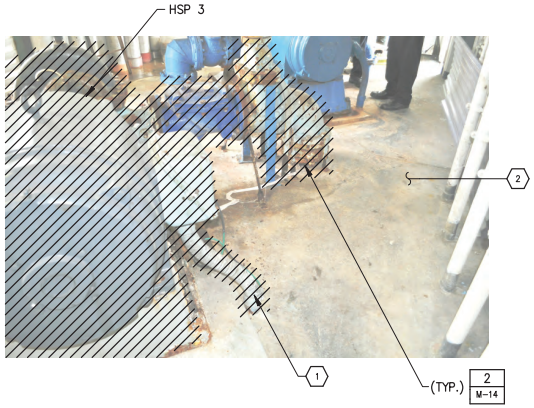

PUMP STATION PHOTO 10
NTS

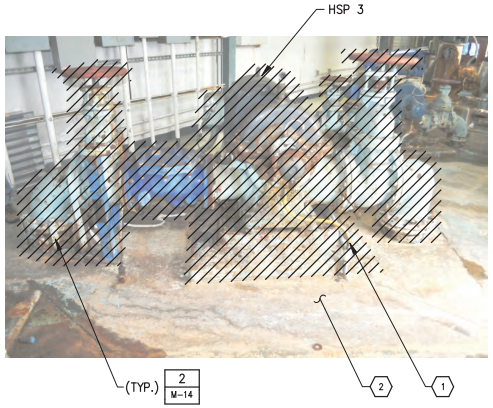

PUMP STATION PHOTO 11
NTS

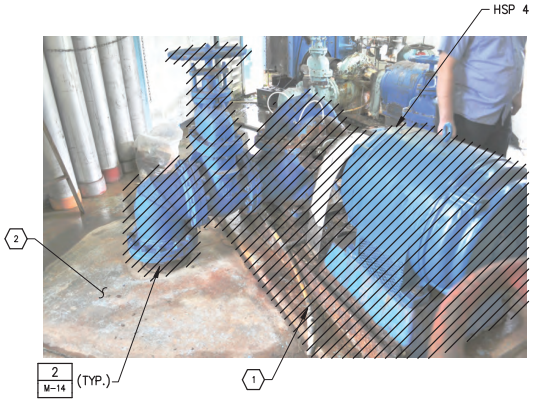

PUMP STATION PHOTO 12
NTS

GENERAL NOTE:

1. REFER TO GENERAL NOTES AND KEYED NOTES ON DRAWING M-14.

KEYED NOTES:

1. CUT ELECTRICAL CONDUIT 1-INCH BELOW CONCRETE SURFACE, REMOVE ALL EXISTING CABLES BACK TO SOURCE, REMOVE ALL EXPOSED CONDUIT AND PATCH CONCRETE. TYPICAL FOR ALL CONDUIT PENETRATIONS FOR EACH PUMP.
2. SEE STRUCTURAL DRAWINGS FOR SLAB REHABILITATION REQUIREMENTS.

LEGEND:

TO BE REMOVED

NO.	DATE	ISSUED FOR	BY

DESIGNED G.A.B.
DRAWN G.P.B.
CHECKED G.N.C.
PROJ. ENGR. G.A.B.

H. J. VIDAL P.E.
No. 37882

HAZEN AND SAWYER
Environmental Engineers & Scientists
4000 Hollywood Boulevard, Suite 750N
Hollywood, Florida 33021
Certificate of Authorization Number: 2771

SCALE NTS

CLIENTS PROJECT: –
ENGINEERS PROJECT: 44238-004
CAD REFERENCE: 44238-004BP3-M16

NORTH MIAMI FLORIDA
CITY OF NORTH MIAMI
PUBLIC WORKS UTILITIES

WINSON WATER TREATMENT PLANT
BID PACKAGE 3: WTP REHABILITATION
HIGH SERVICE PUMP STATION
DEMOLITION PHOTOS – SHEET 2

DATE: JUNE 2014
SHEET: 77 OF 335
DRAWING: M-16

PERMITTING

PLOT DATE: 6/10/2014 1:51 PM BY: HS
XREFs= ..\Tblock\44238-004-BP3-TB
File = H:\44238-004\Drawings\Bid Package 3 - WTP Rehab\Mech\44238-004BP3-M16 Saved by HScalf Save date = 6/9/2014 5:47 PM

PUMP STATION PHOTO 13
NTS

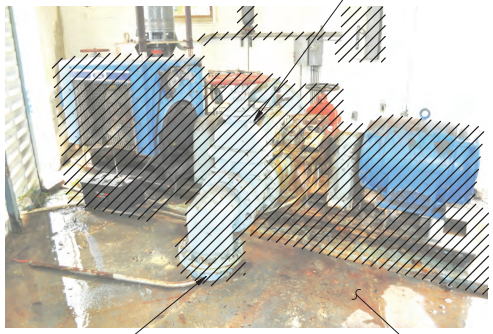

PUMP STATION PHOTO 14
NTS

PUMP STATION PHOTO 15
NTS

PUMP STATION PHOTO 16
NTS

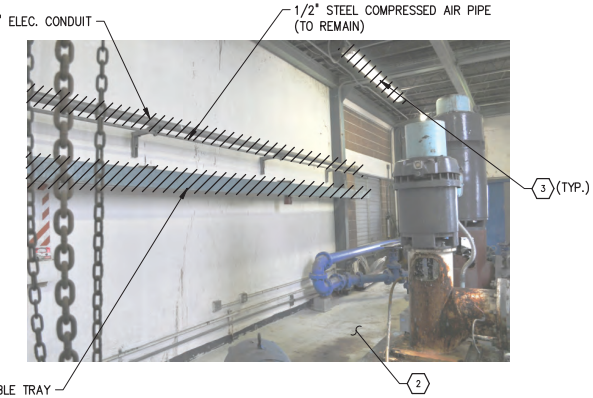

PUMP STATION PHOTO 17
NTS

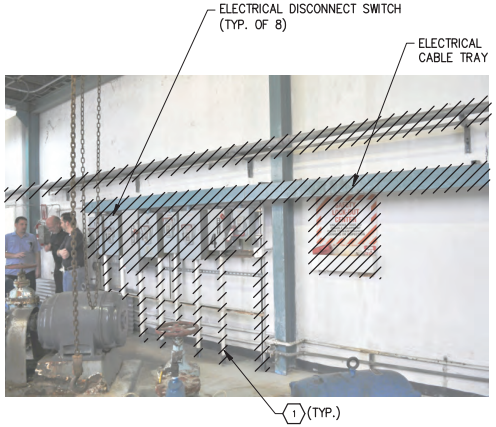

PUMP STATION PHOTO 18
NTS

GENERAL NOTE:

1. REFER TO GENERAL NOTES AND KEYED NOTES ON DRAWING M-14.

KEYED NOTES:

1. CUT ELECTRICAL CONDUIT 1-INCH BELOW CONCRETE SURFACE. REMOVE ALL EXISTING CABLES BACK TO SOURCE. REMOVE ALL EXPOSED CONDUIT AND PATCH CONCRETE. TYPICAL FOR ALL CONDUIT PENETRATIONS FOR EACH PUMP.
2. SEE STRUCTURAL DRAWINGS FOR SLAB REHABILITATION REQUIREMENTS.
3. EXISTING LIGHTING NOT SHOWN IN ITS ENTIRETY FOR CLARITY. REMOVE ALL EXISTING LIGHTS AND ASSOCIATED CONDUITS, WIRES, JUNCTION BOXES AND SWITCHES. REMOVE WIRES BACK TO THE SOURCE.

LEGEND:

TO BE REMOVED

NO.	DATE	ISSUED FOR	BY

DESIGNED G.A.B.
DRAWN G.P.B.
CHECKED G.N.C.
PROJ. ENGR. G.A.B.

H. J. VIDAL P.E.
No. 37882

HAZEN AND SAWYER
Environmental Engineers & Scientists
4000 Hollywood Boulevard, Suite 750N
Hollywood, Florida 33021
Certificate of Authorization Number: 2771

SCALE NTS

CLIENTS PROJECT: –
ENGINEERS PROJECT: 44238-004
CAD REFERENCE: 44238-004BP3-M17

NORTH MIAMI FLORIDA
CITY OF NORTH MIAMI
PUBLIC WORKS UTILITIES

WINSON WATER TREATMENT PLANT
BID PACKAGE 3: WTP REHABILITATION
HIGH SERVICE PUMP STATION
DEMOLITION PHOTOS – SHEET 3

DATE: JUNE 2014
SHEET: 78 OF 335
DRAWING: M-17

PERMITTING

PLOT DATE: 6/10/2014 1:55 PM BY: HS
XREFs= ..\Tblock\44238-004-BP3-TB
File = H:\44238-004\Drawings\Bid Package 3 - WTP Rehab\Mech\44238-004BP3-M17 Saved by HScalf Save date = 6/9/2014 8:58 PM

PUMP STATION PHOTO 19
NTS

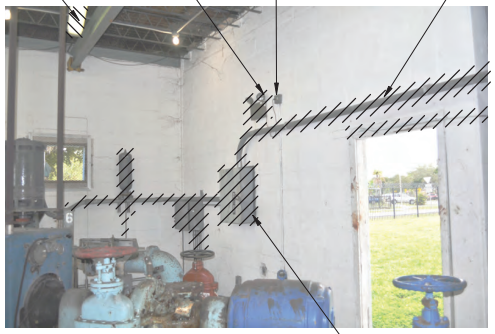

PUMP STATION PHOTO 20
NTS

PUMP STATION PHOTO 21
NTS

PUMP STATION PHOTO 22
NTS

PUMP STATION PHOTO 23
NTS

GENERAL NOTE:

1. REFER TO THE GENERAL NOTES AND KEYED NOTES ON DRAWING M-14.

KEYED NOTES:

1. CUT ELECTRICAL CONDUIT 1-INCH BELOW CONCRETE SURFACE. REMOVE ALL EXISTING CABLES BACK TO SOURCE. REMOVE ALL EXPOSED CONDUIT AND PATCH CONCRETE. TYPICAL FOR ALL CONDUIT PENETRATIONS FOR EACH PUMP.
2. EXISTING LIGHTING NOT SHOWN IN ITS ENTIRETY FOR CLARITY. REMOVE ALL EXISTING LIGHTS AND ASSOCIATED CONDUITS, WIRES, JUNCTION BOXES AND SWITCHES. REMOVE WIRES BACK TO THE SOURCE.

LEGEND:

TO BE REMOVED

NO.	DATE	ISSUED FOR	BY

DESIGNED G.A.B.
DRAWN G.P.B.
CHECKED G.N.C.
PROJ. ENGR. G.A.B.

H. J. VIDAL P.E.
No. 37882

HAZEN AND SAWYER
Environmental Engineers & Scientists
4000 Hollywood Boulevard, Suite 750N
Hollywood, Florida 33021
Certificate of Authorization Number: 2771

SCALE NTS

CLIENTS PROJECT: –
ENGINEERS PROJECT: 44238-004
CAD REFERENCE: 44238-004BP3-M18

NORTH MIAMI FLORIDA
CITY OF NORTH MIAMI
PUBLIC WORKS UTILITIES

WINSON WATER TREATMENT PLANT
BID PACKAGE 3: WTP REHABILITATION
HIGH SERVICE PUMP STATION
DEMOLITION PHOTOS – SHEET 4

DATE: JUNE 2014
SHEET: 79 OF 335
DRAWING: M-18

PERMITTING

PLOT DATE: 6/10/2014 1:58 PM BY: HS
XREFs= ..\Block\44238-004-BP3-TB
File = H:\44238-004\Drawings\Bid Package 3 - WTP Rehab\Mech\44238-004BP3-M18 Saved by HS Save date = 6/9/2014 6:38 PM

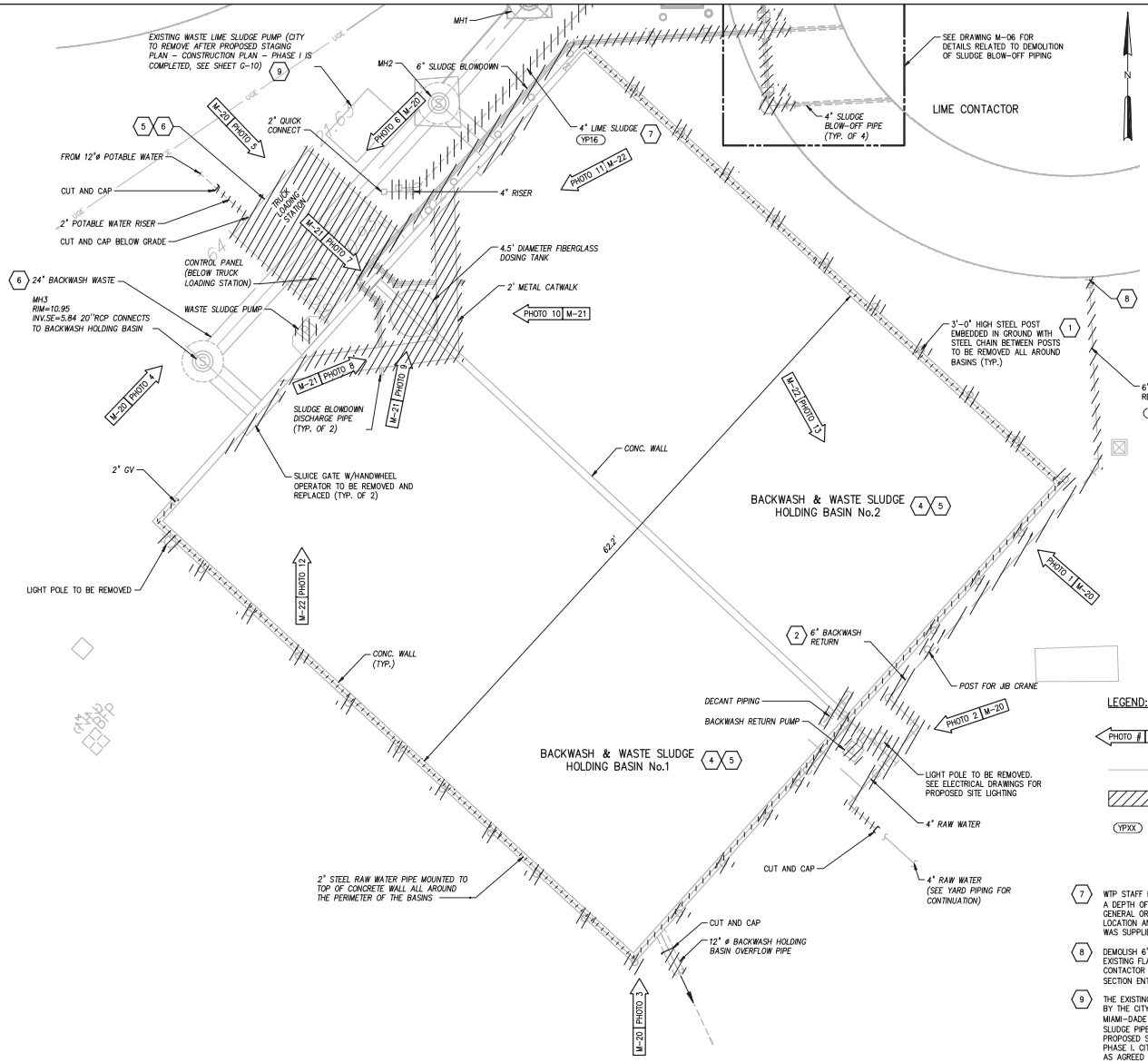

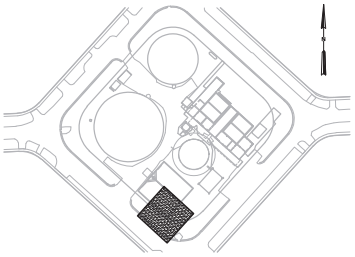

LOCATION MAP

GENERAL NOTES:

1. LIMITED RECORD DRAWINGS EXIST FOR THIS STRUCTURE AND/OR AREA. PHOTOS PROVIDED FOR GENERAL INFORMATION PURPOSES. RECORD DRAWINGS ARE AVAILABLE UPON REQUEST FOR INFORMATIONAL PURPOSES ONLY.
2. THE CONTRACTOR SHALL FIELD VERIFY ALL EXISTING CONDITIONS PRIOR TO BID PER THE REQUIREMENTS OF DIVISION 1 OF THE SPECIFICATIONS.
3. CONTRACTOR RETAINS FULL RESPONSIBILITY FOR FIELD VERIFICATION OF ALL ABOVE GROUND IMPROVEMENTS TO BE REMOVED FOR THIS WORK. SUCH VERIFICATION SHALL INCLUDE: STRUCTURAL, ARCHITECTURAL, HVAC, PLUMBING, ELECTRICAL, IRRIGATION, CONTROLS, FREE STANDING EQUIPMENT, LANDSCAPING, AND ANY AND ALL OTHER EXISTING IMPROVEMENTS WITHIN THE BOUNDARY OF THE WORK WHETHER SHOWN HEREIN OR NOT.
4. FOR BELOW GRADE IMPROVEMENTS TO BE REMOVED REFERENCE APPLICABLE CIVIL AND ELECTRICAL DRAWINGS ACCORDINGLY.
5. REFER TO SPECIFICATION SECTION ENTITLED "DEMOLITION OF EXISTING FACILITIES".
6. PRE-BID ACCESS TO THE SITE SHALL BE COORDINATED BY THE CONTRACTOR UPON REQUEST THROUGH A CONTACT TO BE DETERMINED BY THE CITY OF NORTH MIAMI.

KEYED NOTES:

1. STEEL CHAIN NOT SHOWN FOR CLARITY.
2. THE 6" BACKWASH RETURN PIPE CONTINUES UNDERGROUND TO CONNECTION WITH THE LIME CONTACTOR. THE CONTRACTOR SHALL PERFORM EXPLORATORY EXCAVATIONS AS NEEDED. THE LOCATION SHOWN FOR EXISTING UNDERGROUND IMPROVEMENTS IS CONCEPTUAL IN NATURE AND MAY VARY FROM THAT SHOWN.
3. FOR CONSTRUCTION SEQUENCING RESTRICTIONS FOR THE WORK SHOWN ON THIS SHEET, REFERENCE THE SPECIFICATION ENTITLED "SUMMARY OF WORK".
4. SEE THE STRUCTURAL DRAWINGS FOR REFURBISHMENT OF THE BASINS.
5. AVAILABLE RECORD DRAWINGS FOR THE BASINS, PIPING AND TRUCK LOADING STATION ARE INCLUDED IN THE APPENDICES FOR GENERAL INFORMATIONAL PURPOSES ONLY.
6. THE EXISTING BACKWASH WASTE PIPE MUST REMAIN IN SERVICE THROUGHOUT CONSTRUCTION. THE CONTRACTOR SHALL PROTECT ACCORDINGLY.

LEGEND:

PHOTO # –	ARROW INDICATES DIRECTION AND POINT OF VIEW OF PHOTO
	EXISTING
	TO BE REMOVED
YP#X	YARD PIPING No. XX (SEE SCHEDULE)

7. WTP STAFF REPORTS THAT THIS PIPE WAS INSTALLED AT A DEPTH OF COVER OF APPROXIMATLY 1'-6" IN THE GENERAL ORIENTATION SHOWN. THE INFORMATION ON THE LOCATION AND ORIENTATION OF THIS EXISTING PIPELINE WAS SUPPLIED BY THE CITY ON MARCH 11, 2013.
8. DEMOLISH 6" BACKWASH RETURN RISER PIPE. THE EXISTING FLANGED INLET AT THE TOP OF THE LIME CONTACTOR SHALL REMAIN AND BE REFURBISHED PER SECTION ENTITLED "LIME CONTACTOR REHABILITATION".
9. THE EXISTING WASTE LIME SLUDGE PUMP SHALL BE USED BY THE CITY TO DISPOSE OF ALL BACKWASH TO THE MIAMI-DADE SEWER SYSTEM VIA THE EXISTING 4"/6" LIME SLUDGE PIPELINE (YP16) UP UNTIL THE COMPLETION OF PROPOSED STAGING PLAN – CONSTRUCTION PLAN – PHASE I. CITY SHALL REMOVE THE PUMP WHEN COMPLETE AS AGREED BETWEEN CITY AND CONTRACTOR.

3/16"=1'-0" 6 4 2 0 5'

NO.	DATE	ISSUED FOR	BY
1	4/1/14	100% QA COMMENTS	H.J.V.

DESIGNED G.A.B.
DRAWN A.B.C.
CHECKED G.N.C.
PROJ. ENGR. G.A.B.

H. J. VIDAL P.E.
No. 37882

HAZEN AND SAWYER
Environmental Engineers & Scientists
4000 Hollywood Boulevard, Suite 750N
Hollywood, Florida 33021
Certificate of Authorization Number: 2771

SCALE 3/16"=1'-0"

CLIENTS PROJECT: –
ENGINEERS PROJECT: 44238-004
CAD REFERENCE: 44238-004BP3-M19

NORTH MIAMI FLORIDA
CITY OF NORTH MIAMI
PUBLIC WORKS UTILITIES

WINSON WATER TREATMENT PLANT
BID PACKAGE 3: WTP REHABILITATION
BACKWASH & WASTE SLUDGE HOLDING BASIN DEMOLITION PLAN

DATE: JUNE 2014
SHEET: 80 OF 335
DRAWING: M-19

PERMITTING

PLOT DATE: 6/10/2014 2:02 PM BY: HS

XREFs= ..\Thlock\44238-004-BP3-TB,..\Base-BP3\C-Site-Survey-X,..\Base-BP3\C-Site-Pipe-X,..\Base-BP3\C-BP3-SiteUtility

File = H:\44238-004\Drawings\Bid Package 3 - WTP Rehab\Mech\44238-004BP3-M19 Saved by HsCad2 Save date = 6/9/2014 7:26 PM

BACKWASH HOLDING BASIN PHOTO 1
NTS

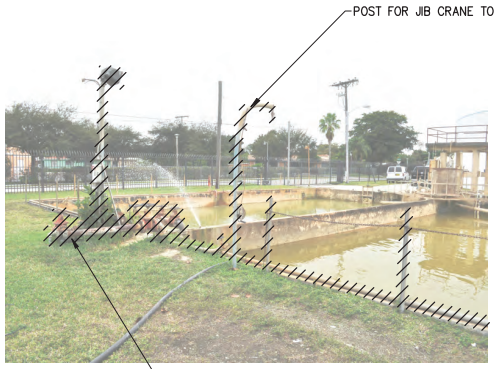

BACKWASH HOLDING BASIN PHOTO 2
NTS

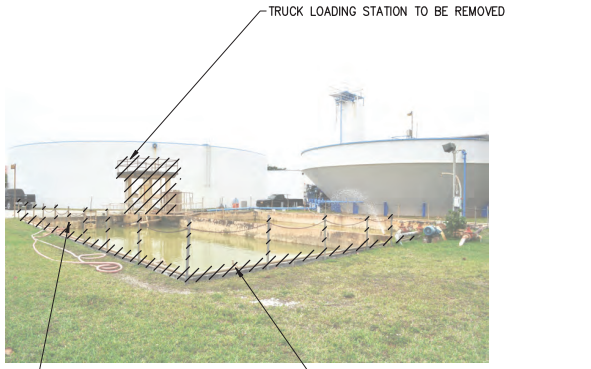

BACKWASH HOLDING BASIN PHOTO 3
NTS

BACKWASH HOLDING BASIN PHOTO 4
NTS

BACKWASH HOLDING BASIN PHOTO 5
NTS

BACKWASH HOLDING BASIN PHOTO 6
NTS

GENERAL NOTE:

1. REFER TO GENERAL NOTES AND KEYED NOTES ON DRAWING M-19.

LEGEND:

TO BE REMOVED

NO.	DATE	ISSUED FOR	BY

DESIGNED G.A.B.
DRAWN G.P.B.
CHECKED G.N.C.
PROJ. ENGR. G.A.B.

H. J. VIDAL P.E.
No. 37882

HAZEN AND SAWYER
Environmental Engineers & Scientists
4000 Hollywood Boulevard, Suite 750N
Hollywood, Florida 33021
Certificate of Authorization Number: 2771

SCALE NTS

CLIENTS PROJECT: –
ENGINEERS PROJECT: 44238-004
CAD REFERENCE: 44238-004BP3-M20

NORTH MIAMI FLORIDA
CITY OF NORTH MIAMI
PUBLIC WORKS UTILITIES

WINSON WATER TREATMENT PLANT
BID PACKAGE 3: WTP REHABILITATION
BACKWASH & WASTE SLUDGE HOLDING BASIN DEMOLITION PHOTOS – SHEET 1

DATE: JUNE 2014
SHEET: 81 OF 335
DRAWING: M-20

PERMITTING

PLOT DATE: 6/10/2014 2:10 PM BY: HS
XREFs= ..\Block\44238-004-BP3-TB
File = H:\44238-004\Drawings\Bid Package 3 - WTP Rehab\Mech\44238-004BP3-M20 Saved by lmsoriano Save date = 6/9/2014 7:03 PM

BACKWASH HOLDING BASIN PHOTO 7
NTS

BACKWASH HOLDING BASIN PHOTO 8
NTS

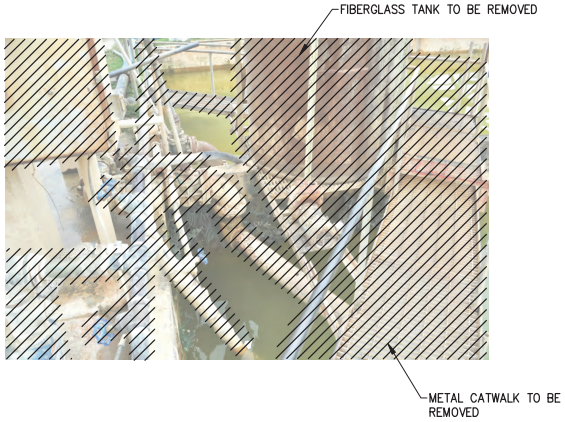

BACKWASH HOLDING BASIN PHOTO 9
NTS

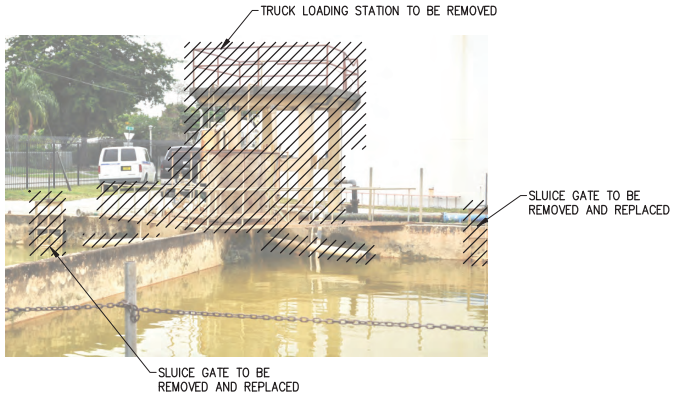

BACKWASH HOLDING BASIN PHOTO 10
NTS

GENERAL NOTE:

1. REFER TO GENERAL NOTES AND KEYED NOTES ON DRAWING M-19.

LEGEND:

TO BE REMOVED

NO.	DATE	ISSUED FOR	BY

DESIGNED G.A.B.
DRAWN G.P.B.
CHECKED G.N.C.
PROJ. ENGR. G.A.B.

H. J. VIDAL P.E.
No. 37882

HAZEN AND SAWYER
Environmental Engineers & Scientists
4000 Hollywood Boulevard, Suite 750N
Hollywood, Florida 33021
Certificate of Authorization Number: 2771

SCALE NTS

CLIENTS PROJECT: –
ENGINEERS PROJECT: 44238-004
CAD REFERENCE: 44238-004BP3-M21

NORTH MIAMI FLORIDA
CITY OF NORTH MIAMI
PUBLIC WORKS UTILITIES

WINSON WATER TREATMENT PLANT
BID PACKAGE 3: WTP REHABILITATION
BACKWASH & WASTE SLUDGE HOLDING BASIN DEMOLITION PHOTOS – SHEET 2

DATE: JUNE 2014
SHEET: 82 OF 335
DRAWING: M-21

PERMITTING

PLOT DATE: 6/10/2014 1:54 PM BY: HS
XREFs= ..\tblock\44238-004-BP3-TB
File = H:\44238-004\Drawings\Bid Package 3 – WTP Rehab\Mech\44238-004BP3-M21 Saved by Administrator Save date = 6/9/2014 6:51 PM

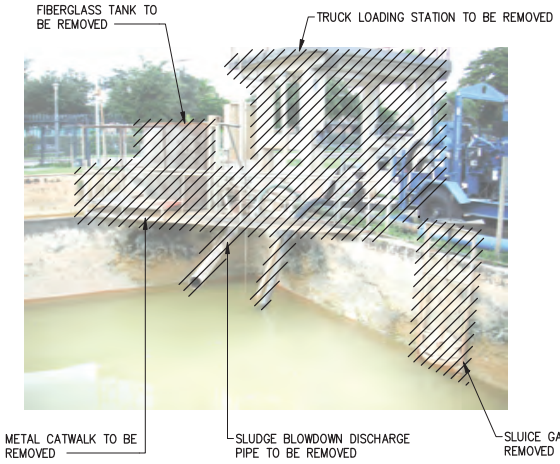

BACKWASH HOLDING BASIN PHOTO 11
NTS

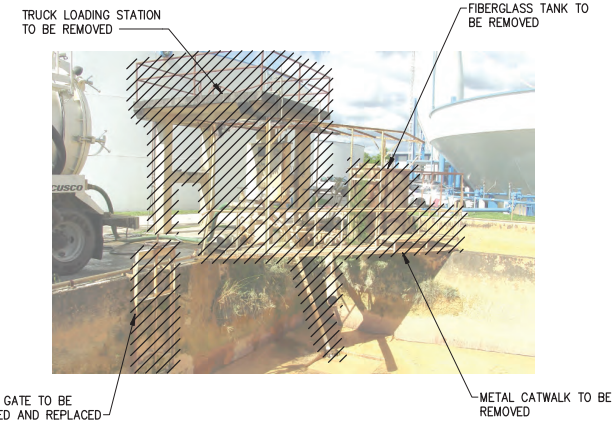

BACKWASH HOLDING BASIN PHOTO 12
NTS

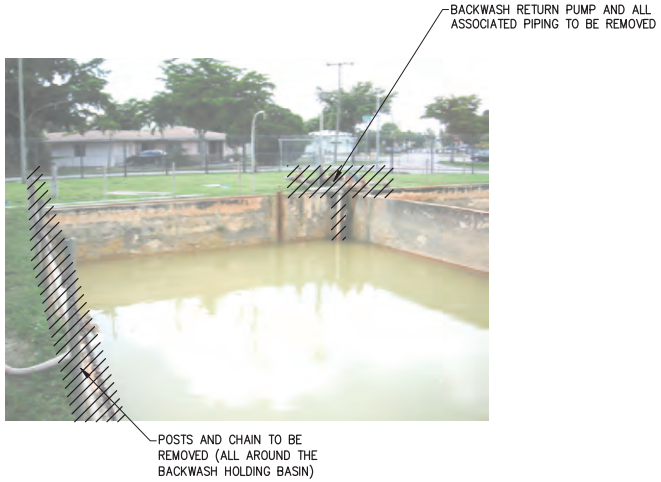

BACKWASH HOLDING BASIN PHOTO 13
NTS

GENERAL NOTE:

1. REFER TO THE GENERAL NOTES AND KEYED NOTES ON DRAWING M-19.

LEGEND:

TO BE REMOVED

NO.	DATE	ISSUED FOR	BY

DESIGNED G.A.B.
DRAWN G.P.B.
CHECKED G.N.C.
PROJ. ENGR. G.A.B.

H. J. VIDAL P.E.
No. 37882

HAZEN AND SAWYER
Environmental Engineers & Scientists
4000 Hollywood Boulevard, Suite 750N
Hollywood, Florida 33021
Certificate of Authorization Number: 2771

SCALE NTS

CLIENTS PROJECT: –
ENGINEERS PROJECT: 44238-004
CAD REFERENCE: 44238-004BP3-M22

NORTH MIAMI FLORIDA
CITY OF NORTH MIAMI
PUBLIC WORKS UTILITIES

WINSON WATER TREATMENT PLANT
BID PACKAGE 3: WTP REHABILITATION
BACKWASH & WASTE SLUDGE HOLDING BASIN DEMOLITION PHOTOS – SHEET 3

DATE: JUNE 2014
SHEET: 83 OF 335
DRAWING: M-22

PERMITTING

PLOT DATE: 6/10/2014 1:56 PM BY: HS
XREFs= ..\Titlock\44238-004-BP3-TB
File = H:\44238-004\Drawings\Bid Package 3 - WTP Rehab\Mech\44238-004BP3-M22 Saved by Administrator Save date = 6/9/2014 8:01 PM

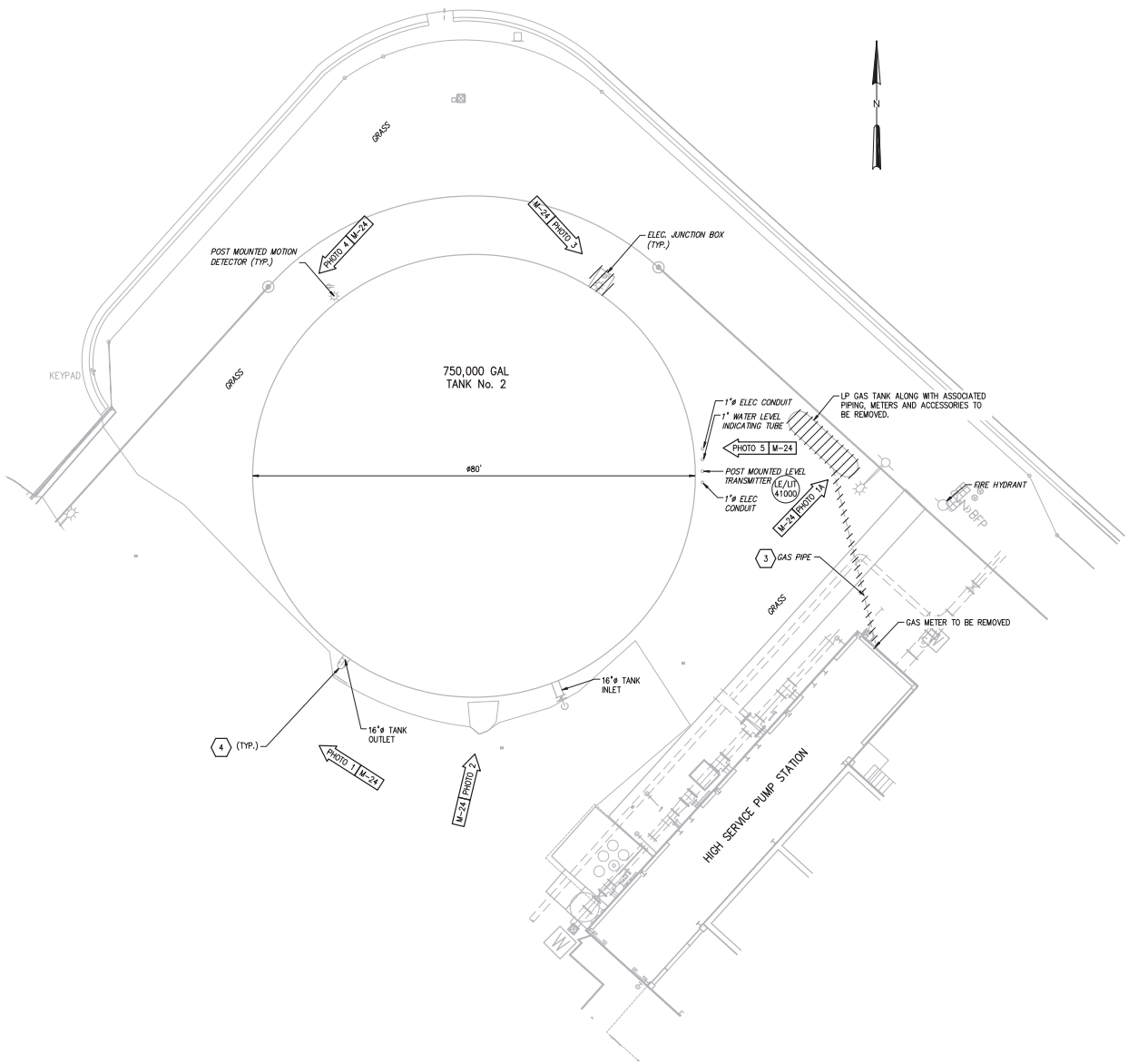

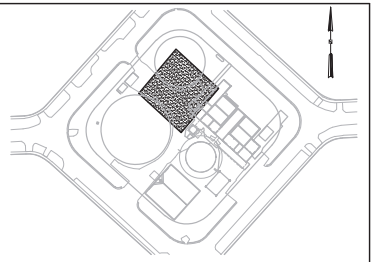

LOCATION MAP

GENERAL NOTES:

1. NO RECORD DRAWINGS EXIST FOR THIS STRUCTURE AND/OR AREA. PHOTOS PROVIDED FOR GENERAL INFORMATION PURPOSES.
2. THE CONTRACTOR SHALL FIELD VERIFY ALL EXISTING CONDITIONS PRIOR TO BID PER THE REQUIREMENTS OF DIVISION 1 OF THE SPECIFICATIONS.
3. CONTRACTOR RETAINS FULL RESPONSIBILITY FOR FIELD VERIFICATION OF ALL ABOVE GROUND IMPROVEMENTS TO BE REMOVED FOR THIS WORK. SUCH VERIFICATION SHALL INCLUDE: STRUCTURAL, ARCHITECTURAL, HVAC, PLUMBING, ELECTRICAL, IRRIGATION, CONTROLS, FREE STANDING EQUIPMENT, LANDSCAPING, AND ANY AND ALL OTHER EXISTING IMPROVEMENTS WITHIN THE BOUNDARY OF THE WORK WHETHER SHOWN HEREIN OR NOT.
4. FOR BELOW GRADE IMPROVEMENTS TO BE REMOVED REFERENCE APPLICABLE CIVIL AND ELECTRICAL DRAWINGS ACCORDINGLY.
5. REFER TO SPECIFICATION SECTION ENTITLED "DEMOLITION OF EXISTING FACILITIES".
6. PRE-BID ACCESS TO THE SITE SHALL BE COORDINATED BY THE CONTRACTOR UPON REQUEST THROUGH A CONTACT TO BE DETERMINED BY THE CITY OF NORTH MIAMI.
7. FOR A MORE DETAILED REPRESENTATION OF THE CONDITION OF THE TANK REFERENCE THE REPORT ENTITLED "INSPECTION AND CLEANING OF THE 750,000 GALLON WELDED STEEL WATER STORAGE TANK" DATED FEBRUARY 10, 2009 PREPARED FOR CITY OF NORTH MIAMI BY UNDERWATER SOLUTIONS, INC. THIS REPORT IS PROVIDED AS AN EXHIBIT TO THE PROJECT SPECIFICATIONS FOR GENERAL INFORMATION PURPOSES ONLY. NEITHER THE CITY NOR THE ENGINEER WARRANT THE CONTENTS OF THE REPORT.

KEYED NOTES:

1. FOR CONSTRUCTION SEQUENCING RESTRICTIONS FOR THE WORK SHOWN ON THIS SHEET REFERENCE THE SPECIFICATIONS ENTITLED "SUMMARY OF WORK".
2. FOR REQUIREMENTS RELATED TO DEMOLITION WORK, PROTECTION OF EXISTING FACILITIES AND MAINTENANCE OF OPERATIONS REFERENCE APPLICABLE SPECIFICATIONS IN DIVISION 1.
3. THE GAS PIPE IS SHOWN FOR CONCEPTUAL PURPOSES ONLY. THE LOCATION IS UNKNOWN AND WILL VARY FROM THAT SHOWN. THE CONTRACTOR SHALL PERFORM EXPLORATORY EXCAVATIONS AS NEEDED.
4. FOR CONTINUATION OF PIPING REMOVALS, SEE YARD PIPING DEMOLITION PLAN. TYPICAL FOR ALL PIPING.

LEGEND:

PHOTO # – ARROW INDICATES DIRECTION AND POINT OF VIEW OF PHOTO

EXISTING

TO BE REMOVED

1"=10'-0" 10 5 0 10'

NO.	DATE	ISSUED FOR	BY

DESIGNED G.A.B.
DRAWN A.B.C.
CHECKED G.N.C.
PROJ. ENGR. G.A.B.

H. J. VIDAL P.E.
No. 37882

HAZEN AND SAWYER
Environmental Engineers & Scientists
4000 Hollywood Boulevard, Suite 750N
Hollywood, Florida 33021
Certificate of Authorization Number: 2771

SCALE 1"=10'-0"

CLIENTS PROJECT: –
ENGINEERS PROJECT: 44238-004
CAD REFERENCE: 44238-004BP3-M23

NORTH MIAMI FLORIDA
CITY OF NORTH MIAMI
PUBLIC WORKS UTILITIES

WINSON WATER TREATMENT PLANT
BID PACKAGE 3: WTP REHABILITATION
WATER STORAGE TANK 0.75 MG
EXISTING PLAN

DATE: JUNE 2014
SHEET: 84 OF 335
DRAWING: M-23

PERMITTING

PLOT DATE: 6/10/2014 1:59 PM BY: HS

XREFs= ..\Tblock\44238-004-BP3-TB,..\Base-BP3\C-Site-Survey-X,..\Base-BP3\M-BP1-Filters-Plan-Bottom-X

File = H:\44238-004\Drawings\Bid Package 3 - WTP Rehab\Mech\44238-004BP3-M23 Saved by HsCad2 Save date = 6/9/2014 8:59 PM

LP TANK DEMOLITION PHOTO 1A
NTS

0.75 MG TANK PHOTO 1
NTS

0.75 MG TANK PHOTO 2
NTS

0.75 MG TANK PHOTO 3
NTS

0.75 MG TANK PHOTO 4
NTS

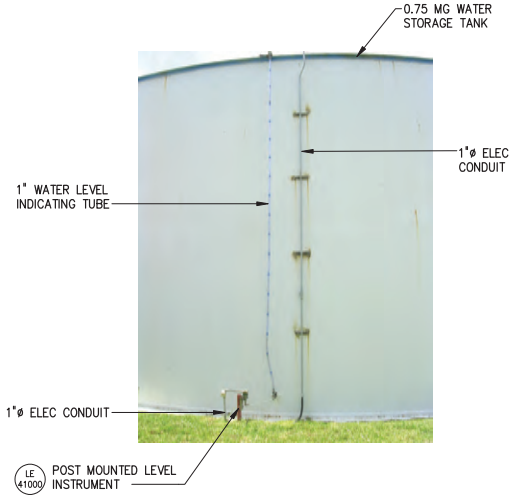

0.75 MG TANK PHOTO 5
NTS

GENERAL NOTE:

1. REFER TO THE GENERAL NOTES AND KEYED NOTES ON DRAWING M-23.

LEGEND:

TO BE REMOVED

NO.	DATE	ISSUED FOR	BY

DESIGNED G.A.B.
DRAWN G.P.B.
CHECKED G.N.C.
PROJ. ENGR. G.A.B.

H. J. VIDAL P.E.
No. 37882

HAZEN AND SAWYER
Environmental Engineers & Scientists
4000 Hollywood Boulevard, Suite 750N
Hollywood, Florida 33021
Certificate of Authorization Number: 2771

SCALE NTS

CLIENTS PROJECT: –
ENGINEERS PROJECT: 44238-004
CAD REFERENCE: 44238-004BP3-M24

NORTH MIAMI FLORIDA
CITY OF NORTH MIAMI
PUBLIC WORKS UTILITIES

WINSON WATER TREATMENT PLANT
BID PACKAGE 3: WTP REHABILITATION
WATER STORAGE TANK 0.75 MG AND LP TANK PHOTOS

DATE: JUNE 2014
SHEET: 85 OF 335
DRAWING: M-24

PERMITTING

PLOT DATE: 6/10/2014 2:02 PM BY: HS
XREFs= .\Tblock\44238-004-BP3-TB
File = H:\44238-004\Drawings\Bid Package 3 - WTP Rehab\Mech\44238-004BP3-M24 Saved by HS Save date = 6/9/2014 5:45 PM

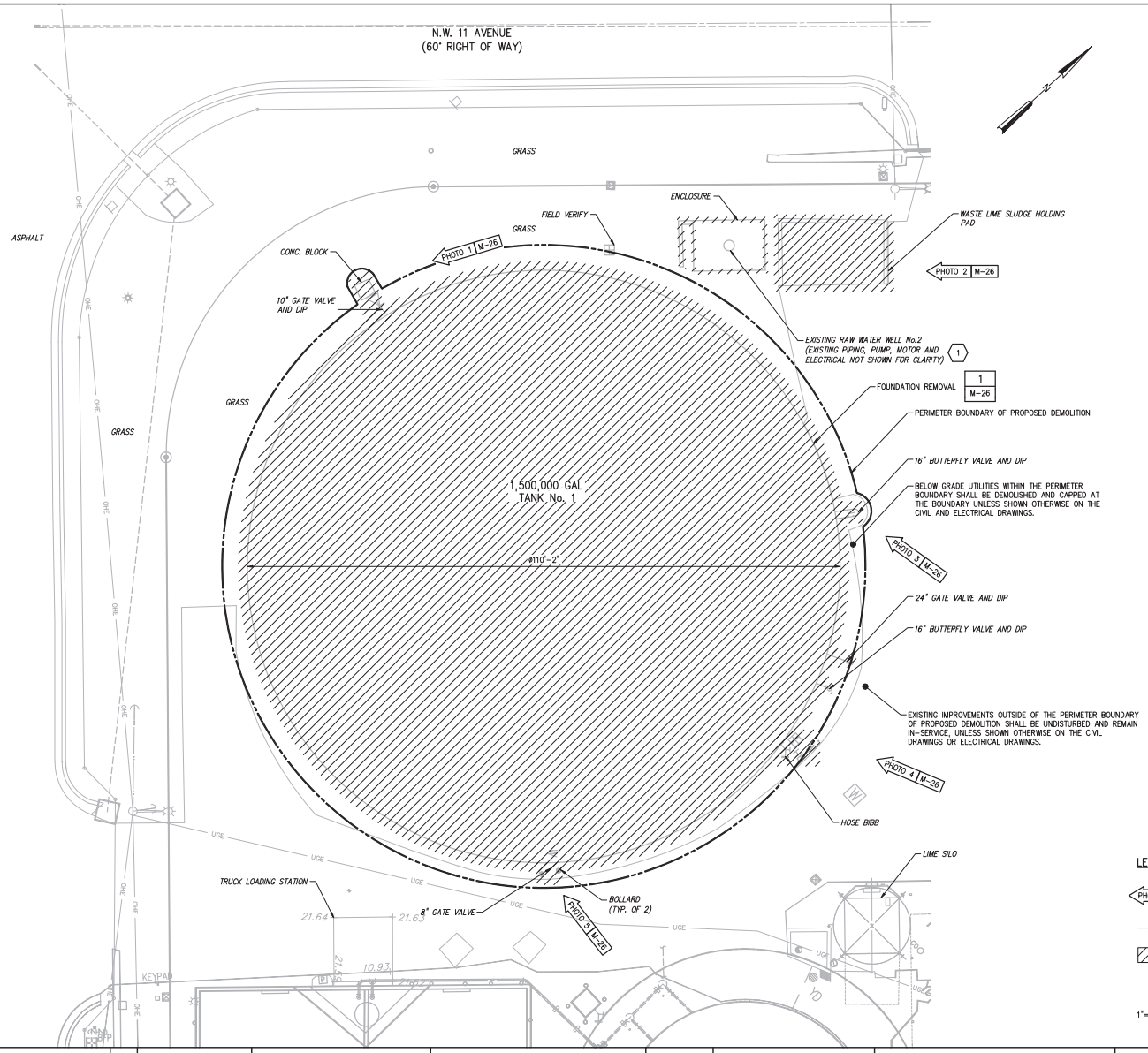

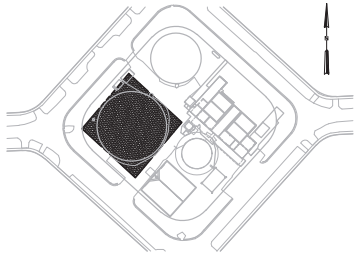

LOCATION MAP

GENERAL NOTES:

1. NO RECORD DRAWINGS EXIST FOR THIS STRUCTURE AND/OR AREAL PHOTOS PROVIDED FOR GENERAL INFORMATION PURPOSES.
2. THE CONTRACTOR SHALL FIELD VERIFY ALL EXISTING CONDITIONS PRIOR TO BID PER THE REQUIREMENTS OF DIVISION 1 OF THE SPECIFICATIONS.
3. CONTRACTOR RETAINS FULL RESPONSIBILITY FOR FIELD VERIFICATION OF ALL ABOVE GROUND IMPROVEMENTS TO BE REMOVED FOR THIS WORK. SUCH VERIFICATION SHALL INCLUDE: STRUCTURAL, ARCHITECTURAL, HVAC, PLUMBING, ELECTRICAL, IRRIGATION, CONTROLS, FREE STANDING EQUIPMENT, LANDSCAPING, AND ANY AND ALL OTHER EXISTING IMPROVEMENTS WITHIN THE BOUNDARY OF THE WORK WHETHER SHOWN HEREIN OR NOT.
4. FOR BELOW GRADE IMPROVEMENTS TO BE REMOVED REFERENCE APPLICABLE CIVIL AND ELECTRICAL DRAWINGS ACCORDINGLY.
5. REFER TO SPECIFICATION SECTION ENTITLED "DEMOLITION OF EXISTING FACILITIES".
6. PRE-BID ACCESS TO THE SITE SHALL BE COORDINATED BY THE CONTRACTOR UPON REQUEST THROUGH A CONTACT TO BE DETERMINED BY THE CITY OF NORTH MIAMI.
7. FOR A MORE DETAILED REPRESENTATION OF THE CONDITION OF THE TANK REFERENCE THE REPORT ENTITLED "INSPECTION AND CLEANING OF THE 1.5 MILLON GALLON WELDED STEEL WATER STORAGE TANK" DATED FEBRUARY 10, 2009 PREPARED FOR CITY OF NORTH MIAMI BY UNDERWATER SOLUTIONS, INC. THIS REPORT IS PROVIDED AS AN EXHIBIT TO THE PROJECT SPECIFICATIONS FOR GENERAL INFORMATION PURPOSES ONLY. NEITHER THE CITY NOR THE ENGINEER WARRANT THE CONTENTS OF THE REPORT.
8. DEMOLITION SHALL INCLUDE COMPLETE REMOVAL OF ALL FOUNDATIONS AND SLABS ON GRADE. AFTER DEMOLITION GRADE AREA WITHIN THE PERIMETER BOUNDARY OF PROPOSED DEMOLITION TO 6-INCHES BELOW THE EXISTING GRADE AND FILL AREA WITH SUITABLE MATERIAL.

LEGEND:

- PHOTO # – ARROW INDICATES DIRECTION AND POINT OF VIEW OF PHOTO
- EXISTING
- TO BE REMOVED

1"=10'-0" (10 5 0 10')

KEYED NOTES:

1. SEE DRAWING M-05 FOR ADDITIONAL DETAILS RELATIVE TO REMOVAL OF THE ENCLOSURE, WELL PUMP AND ASSOCIATED PIPING AND ELECTRICAL.
2. FOR CONSTRUCTION SEQUENCING RESTRICTIONS FOR THE WORK SHOWN ON THIS SHEET REFERENCE THE SPECIFICATION ENTITLED "SUMMARY OF WORK".
3. FOR REQUIREMENTS RELATED TO DEMOLITION WORK, PROTECTION OF EXISTING FACILITIES AND MAINTENANCE OF OPERATIONS REFERENCE APPLICABLE SPECIFICATIONS IN DIVISION 1.
4. FOR CONTINUATION OF PIPING REMOVALS SEE YARD PIPING DEMOLITION PLAN. TYPICAL FOR ALL PIPING.

NO.	DATE	ISSUED FOR	BY

DESIGNED G.A.B.
DRAWN G.P.B.
CHECKED G.N.C.
PROJ. ENGR. G.A.B.

H. J. VIDAL P.E. No. 37882

HAZEN AND SAWYER
Environmental Engineers & Scientists
4000 Hollywood Boulevard, Suite 750N
Hollywood, Florida 33021
Certificate of Authorization Number: 2771

SCALE 1"=10'-0"

CLIENTS PROJECT: –
ENGINEERS PROJECT: 44238-004
CAD REFERENCE: 44238-004BP3-M25

NORTH MIAMI FLORIDA
CITY OF NORTH MIAMI
PUBLIC WORKS UTILITIES

WINSON WATER TREATMENT PLANT
BID PACKAGE 3: WTP REHABILITATION
WATER STORAGE TANK 1.5 MG
DEMOLITION PLAN

DATE: JUNE 2014
SHEET: 86 OF 335
DRAWING: M-25

PERMITTING

PLOT DATE: 6/10/2014 2:04 PM BY: HS

XREFs= ..\Tblock\44238-004-BP3-TB,..\Base-BP3\C-Site-Survey-X,..\Base-BP3\C-Site-Pipe-X

File = H:\44238-004\Drawings\Bid Package 3 - WTP Rehab\Mech\44238-004BP3-M25 Saved by lmsoriano Save date = 6/9/2014 8:54 PM

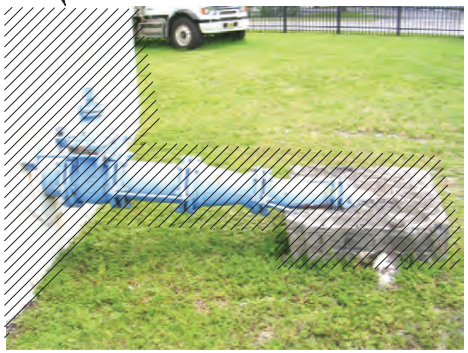

1.5 MG TANK – PHOTO 1
NTS

1.5 MG TANK – PHOTO 2
NTS

1.5 MG TANK – PHOTO 3
NTS

1.5 MG TANK – PHOTO 4
NTS

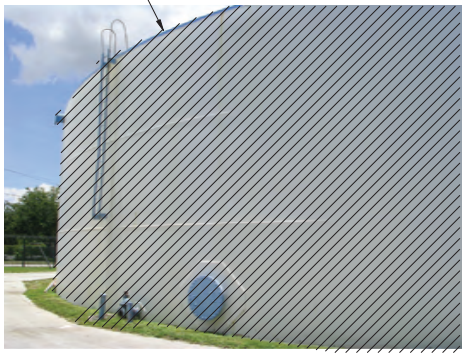

1.5 MG TANK – PHOTO 5
NTS

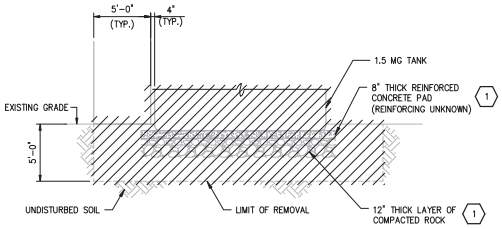

SECTION

DETAIL 1
NTS M-25

GENERAL NOTE:

1. REFER TO THE GENERAL NOTES AND KEYED NOTES ON DRAWING M-25.

KEYED NOTES:

1. CONCRETE PAD THICKNESS AND COMPACTED ROCK THICKNESS BASED UPON DATA COLLECTED BY CITY WTP STAFF. SOIL EXCAVATED DURING FOUNDATION DEMOLITION MAY BE REUSED IF IT MEETS THE DEFINITION OF "STRUCTURAL FILL" PER THE SECTION TITLED "EXCAVATION AND BACKFILL FOR STRUCTURES".

LEGEND:

TO BE REMOVED

NO.	DATE	ISSUED FOR	BY

DESIGNED G.A.B.
DRAWN G.P.B.
CHECKED G.N.C.
PROJ. ENGR. G.A.B.

H. J. VIDAL P.E.
No. 37882

HAZEN AND SAWYER
Environmental Engineers & Scientists
4000 Hollywood Boulevard, Suite 750N
Hollywood, Florida 33021
Certificate of Authorization Number: 2771

SCALE NTS

CLIENTS PROJECT: –
ENGINEERS PROJECT: 44238-004
CAD REFERENCE: 44238-004BP3-M26

NORTH MIAMI FLORIDA
CITY OF NORTH MIAMI
PUBLIC WORKS UTILITIES

WINSON WATER TREATMENT PLANT
BID PACKAGE 3: WTP REHABILITATION
WATER STORAGE TANK 1.5 MG
DEMOLITION PHOTOS

DATE: JUNE 2014
SHEET: 87 OF 335
DRAWING: M-26

PERMITTING

PLOT DATE: 6/10/2014 2:09 PM BY: HS
XREFs= ..\Tblock\44238-004-BP3-TB
File = H:\44238-004\Drawings\Bid Package 3 - WTP Rehab\Mech\44238-004BP3-M26 Saved by lmsoriano Save date = 6/9/2014 8:19 PM

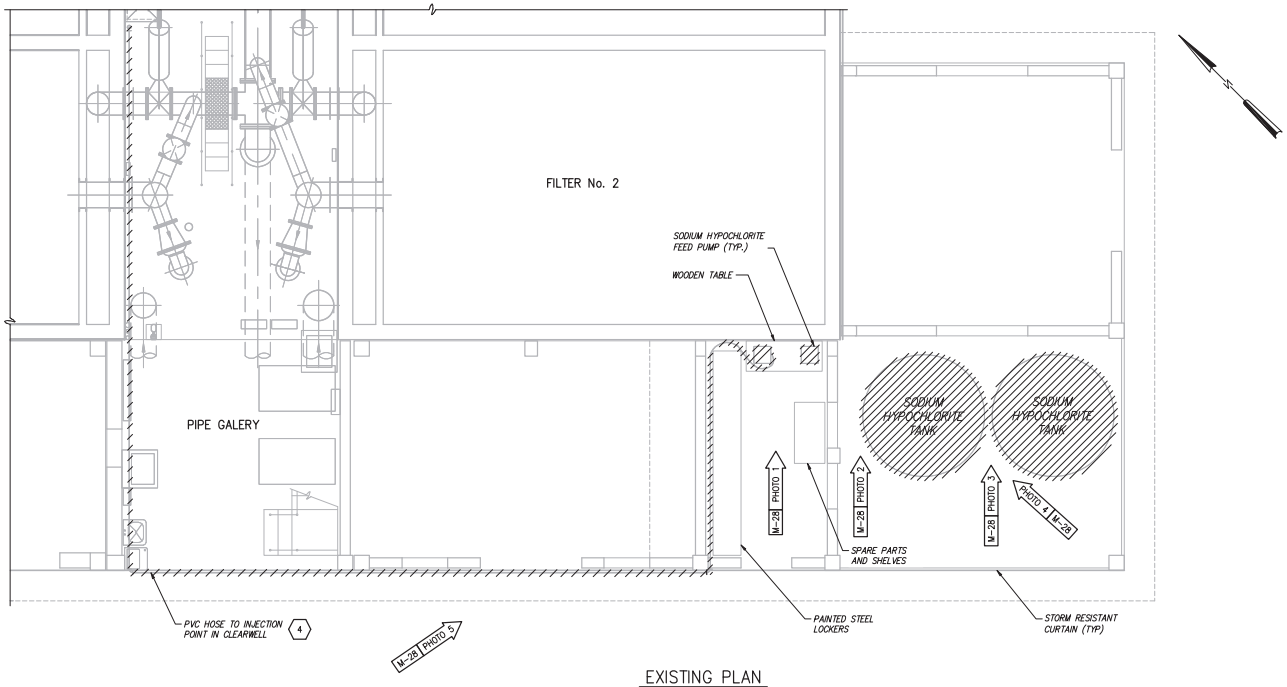

EXISTING PLAN
1/4" = 1'-0"

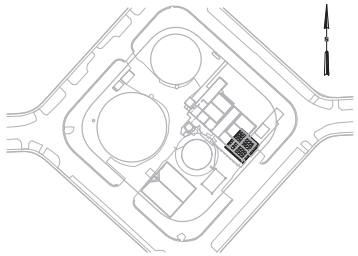

LOCATION MAP

GENERAL NOTES:

1. NO RECORD DRAWINGS EXIST FOR THE SODIUM HYPOCHLORITE TANKS, PUMPS AND PIPING. THE EXISTING TANKS, PIPING AND PUMPS SHOWN ARE CONCEPTUAL IN NATURE AND PRESENTED FOR GENERAL INFORMATION. PHOTOS PROVIDED FOR GENERAL INFORMATION PURPOSES.
2. THE CONTRACTOR SHALL FIELD VERIFY ALL EXISTING CONDITIONS PRIOR TO BID PER THE REQUIREMENTS OF DIVISION 1 OF THE SPECIFICATIONS.
3. CONTRACTOR RETAINS FULL RESPONSIBILITY FOR FIELD VERIFICATION OF ALL ABOVE GROUND IMPROVEMENTS TO BE REMOVED FOR THIS WORK. SUCH VERIFICATION SHALL INCLUDE: STRUCTURAL, ARCHITECTURAL, HVAC, PLUMBING, ELECTRICAL, IRRIGATION, CONTROLS, FREE STANDING EQUIPMENT, LANDSCAPING, AND ANY AND ALL OTHER EXISTING IMPROVEMENTS WITHIN THE BOUNDARY OF THE WORK WHETHER SHOWN HEREIN OR NOT.
4. FOR BELOW GRADE IMPROVEMENTS TO BE REMOVED REFERENCE APPLICABLE CIVIL AND ELECTRICAL DRAWINGS ACCORDINGLY.
5. REFER TO SPECIFICATION SECTION ENTITLED "DEMOLITION OF EXISTING FACILITIES".
6. PRE-BID ACCESS TO THE SITE SHALL BE COORDINATED BY THE CONTRACTOR UPON REQUEST THROUGH A CONTACT TO BE DETERMINED BY THE CITY OF NORTH MIAMI.

KEYED NOTES:

1. FOR CONSTRUCTION SEQUENCING RESTRICTIONS FOR WORK SHOWN ON THIS SHEET, REFERENCE THE SPECIFICATION ENTITLED "SUMMARY OF WORK".
2. ONCE THE PROPOSED HYPOCHLORITE STORAGE AND FEED FACILITY HAVE ACHIEVED SUCCESSFUL START-UP, REFERENCE STRUCTURAL DRAWINGS FOR REFURBISHMENT OF THIS AREA.
3. FOR REQUIREMENTS RELATED TO DEMOLITION WORK, PROTECTION OF EXISTING FACILITIES AND MAINTENANCE OF OPERATIONS REFERENCE APPLICABLE SPECIFICATIONS IN DIVISION 1.
4. RECORD DRAWINGS FOR THIS SYSTEM ARE NOT AVAILABLE. THE CONTRACTOR SHALL ASSUME REMOVAL OF UP TO 500 FEET OF SODIUM HYPOCHLORITE SOLUTION PIPING AND SUPPORTS AS MAY BE APPLICABLE SUBJECT TO REVIEW WITH ENGINEER IN FIELD.

LEGEND:

PHOTO # – ARROW INDICATES DIRECTION AND POINT OF VIEW OF PHOTO

EXISTING

PROPOSED

TO BE REMOVED

1/4"=1'-0" 1 0 1 2 3 7'

NO.	DATE	ISSUED FOR	BY

DESIGNED G.A.B.
DRAWN A.B.C.
CHECKED G.N.C.
PROJ. ENGR. G.A.B.

H. J. VIDAL P.E.
No. 37882

HAZEN AND SAWYER
Environmental Engineers & Scientists
4000 Hollywood Boulevard, Suite 750N
Hollywood, Florida 33021
Certificate of Authorization Number: 2771

SCALE 1/4"=1'-0"

CLIENTS PROJECT: –
ENGINEERS PROJECT: 44238-004
CAD REFERENCE: 44238-004BP3-M27

NORTH MIAMI FLORIDA
CITY OF NORTH MIAMI
PUBLIC WORKS UTILITIES

WINSON WATER TREATMENT PLANT
BID PACKAGE 3: WTP REHABILITATION
SODIUM HYPOCHLORITE FACILITY DEMOLITION PLAN

DATE: JUNE 2014
SHEET: 88 OF 335
DRAWING: M-27

PERMITTING

PLOT DATE: 6/10/2014 2:11 PM BY: HS

XREFs= ..\Tblock\44238-004-BP3-TB,..\Base-BP3\M-BP1-Filters-Plan-Bottom-X,..\Base-BP3\S-BP1-Filters-Plan-Bottom-X

File = H:\44238-004\Drawings\Bid Package 3 - WTP Rehab\Mech\44238-004BP3-M27 Saved by HS Save date = 6/9/2014 6:45 PM

SODIUM HYPOCHLORITE PHOTO 1
NTS

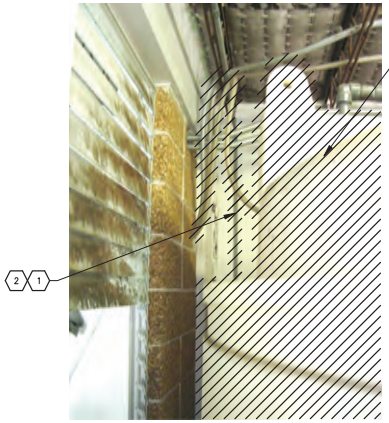

SODIUM HYPOCHLORITE PHOTO 2
NTS

SODIUM HYPOCHLORITE PHOTO 3
NTS

SODIUM HYPOCHLORITE PHOTO 4
NTS

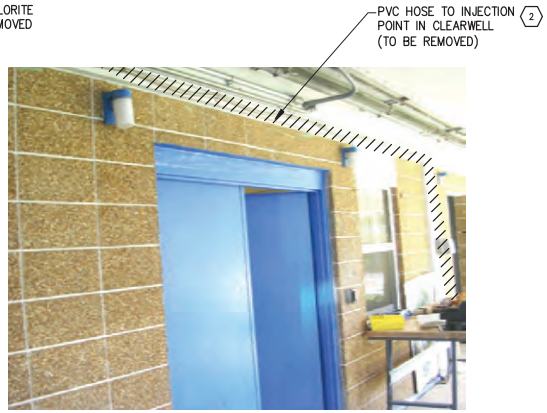

SODIUM HYPOCHLORITE PHOTO 5
NTS

GENERAL NOTE:

1. REFER TO THE GENERAL NOTES AND KEYED NOTES ON DRAWING M-27.

KEYED NOTES:

1. ALL PVC HOSE AND PIPING ASSOCIATED WITH THE HYPOCHLORITE TANKS TO BE REMOVED.
2. RECORD DRAWINGS FOR THIS SYSTEM ARE NOT AVAILABLE. THE CONTRACTOR SHALL ASSUME REMOVAL OF UP TO 500 FEET OF SODIUM HYPOCHLORITE SOLUTION PIPING AND SUPPORTS AS MAY BE APPLICABLE SUBJECT TO REVIEW WITH ENGINEER IN FIELD.

LEGEND:

TO BE REMOVED

NO.	DATE	ISSUED FOR	BY

DESIGNED G.A.B.
DRAWN G.P.B.
CHECKED G.N.C.
PROJ. ENGR. G.A.B.

H. J. VIDAL P.E.
No. 37882

HAZEN AND SAWYER
Environmental Engineers & Scientists
4000 Hollywood Boulevard, Suite 750N
Hollywood, Florida 33021
Certificate of Authorization Number: 2771

SCALE NTS

CLIENTS PROJECT: –
ENGINEERS PROJECT: 44238-004
CAD REFERENCE: 44238-004BP3-M28

NORTH MIAMI FLORIDA
CITY OF NORTH MIAMI
PUBLIC WORKS UTILITIES

WINSON WATER TREATMENT PLANT
BID PACKAGE 3: WTP REHABILITATION
SODIUM HYPOCHLORITE FACILITY DEMOLITION PHOTOS

DATE: JUNE 2014
SHEET: 89 OF 335
DRAWING: M-28

PERMITTING

PLOT DATE: 6/10/2014 2:13 PM BY: HS
XREFs= ..\Tblock\44238-004-BP3-TB
File = H:\44238-004\Drawings\Bid Package 3 - WTP Rehab\Mech\44238-004BP3-M28 Saved by Administrator Save date = 6/9/2014 6:27 PM

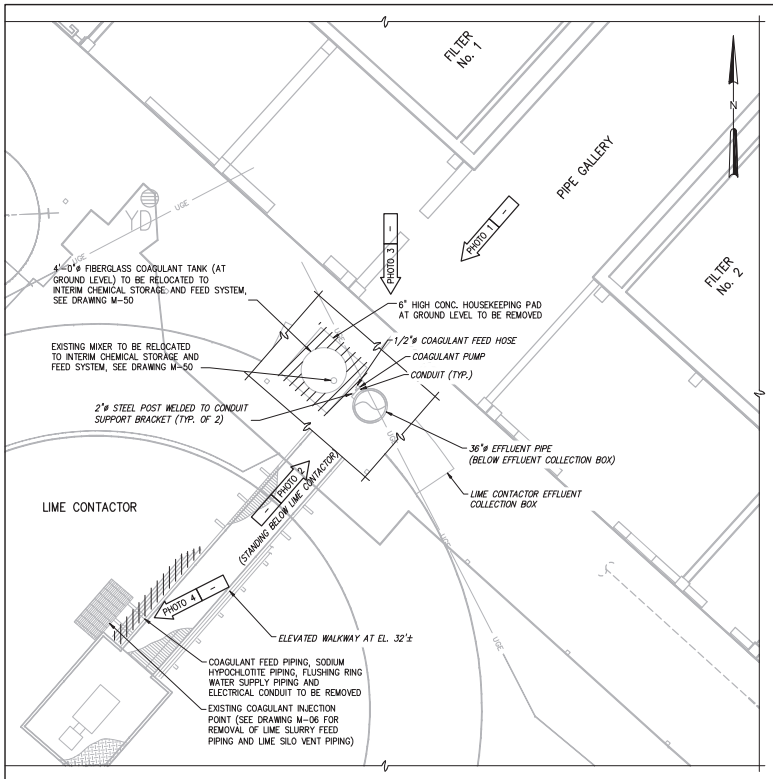

EXISTING PLAN
3/16" = 1'-0"

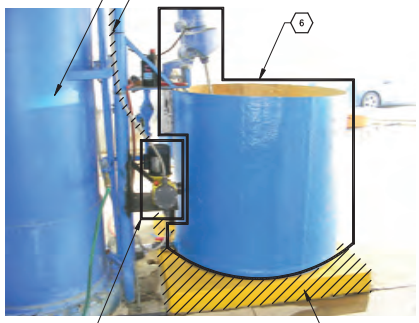

COAGULANT PHOTO 1
NTS

COAGULANT PHOTO 2
NTS

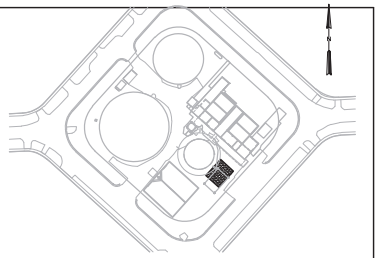

LOCATION MAP

GENERAL NOTES:

1. NO RECORD DRAWINGS EXIST FOR THE EXISTING COAGULANT FEED SYSTEM. THE EXISTING TANK, PIPING, AND PUMP SHOWN ARE CONCEPTUAL IN NATURE AND PRESENTED FOR GENERAL INFORMATION.
2. THE CONTRACTOR SHALL FIELD VERIFY ALL EXISTING CONDITIONS PRIOR TO BID PER THE REQUIREMENTS OF DIVISION 1.
3. CONTRACTOR RETAINS FULL RESPONSIBILITY FOR FIELD VERIFICATION OF ALL ABOVE GROUND IMPROVEMENTS TO BE REMOVED FOR THIS WORK. SUCH VERIFICATION SHALL INCLUDE: STRUCTURAL, ARCHITECTURAL, HVAC, PLUMBING, ELECTRICAL, IRRIGATION, CONTROLS, FREE STANDING EQUIPMENT, LANDSCAPING, AND ANY AND ALL OTHER EXISTING IMPROVEMENTS WITHIN THE BOUNDARY OF THE WORK WHETHER SHOWN HEREIN OR NOT.
4. FOR BELOW GRADE IMPROVEMENTS TO BE REMOVED REFERENCE APPLICABLE CIVIL AND ELECTRICAL DRAWINGS ACCORDINGLY.
5. REFER TO SPECIFICATION SECTION ENTITLED "DEMOLITION OF EXISTING FACILITIES".
6. PRE-BID ACCESS TO THE SITE SHALL BE COORDINATED BY THE CONTRACTOR UPON REQUEST THROUGH A CONTACT TO BE DETERMINED BY THE CITY OF NORTH MIAMI.

KEYED NOTES:

1. FOR CONSTRUCTION SEQUENCING RESTRICTIONS FOR WORK SHOWN ON THIS SHEET, REFERENCE THE SPECIFICATION ENTITLED "SUMMARY OF WORK".
2. ONCE THE PROPOSED COAGULANT HAS ACHIEVED SUCCESSFUL START-UP, REFERENCE STRUCTURAL DRAWINGS FOR REFURBISHMENT OF THIS AREA.
3. FOR REQUIREMENTS RELATED TO DEMOLITION WORK, PROTECTION OF EXISTING FACILITIES AND MAINTENANCE OF OPERATIONS REFERENCE APPLICABLE SPECIFICATIONS IN DIVISION 1.
4. RECORD DRAWINGS FOR THIS SYSTEM ARE NOT AVAILABLE. THE CONTRACTOR SHALL ASSUME REMOVAL OF UP TO 500 FEET OF COAGULANT PIPING AND SUPPORTS AS MAY BE APPLICABLE SUBJECT TO REVIEW WITH ENGINEER IN FIELD. REMOVE WHEN CONTACTOR IS BEING REFURBISHED.
5. WATER SUPPLY PIPING TO COAGULANT SYSTEM NOT SHOWN FOR CLARITY. THE CONTRACTOR SHALL ASSUME THE REMOVAL OF 100 FEET OF WATER PIPING.
6. TANK AND MIXER TO BE RELOCATED SEE DRAWING M-50
7. CONCRETE PAD TO BE REMOVED RESTORE CONCRETE SURFACE TO MATCH FLOOR PER DIVISION 3.
8. RELOCATE THE EXISTING COAGULANT PUMP TO THE INTERIM CHEMICAL STORAGE AND FEED SYSTEM, SEE DRAWING M-50.

LEGEND:

- *EXISTING*
- PROPOSED
- PHOTO # — ARROW INDICATES DIRECTION AND POINT OF VIEW OF PHOTO
- TO BE REMOVED

1/4"=1'-0" 1 0 1 2 3 7'

COAGULANT PHOTO 3
NTS

COAGULANT PHOTO 4
NTS

NO.	DATE	ISSUED FOR	BY
1	4/1/14	100% QA COMMENTS	H.J.V.

DESIGNED G.A.B.
DRAWN A.B.C.
CHECKED G.N.C.
PROJ. ENGR. G.A.B.

H. J. VIDAL P.E.
No. 37882

HAZEN AND SAWYER
Environmental Engineers & Scientists
4000 Hollywood Boulevard, Suite 750N
Hollywood, Florida 33021
Certificate of Authorization Number: 2771

SCALE: AS NOTED

CLIENTS PROJECT: –
ENGINEERS PROJECT: 44238-004
CAD REFERENCE: 44238-004BP3-M29

NORTH MIAMI FLORIDA
CITY OF NORTH MIAMI
PUBLIC WORKS UTILITIES

WINSON WATER TREATMENT PLANT
BID PACKAGE 3: WTP REHABILITATION
COAGULANT FEED SYSTEM
DEMOLITION PLAN AND PHOTOS

DATE: JUNE 2014
SHEET: 90 OF 335
DRAWING: M-29

PERMITTING

PLOT DATE: 6/10/2014 2:16 PM BY: HS
XREFs= ..\Block\44238-004-BP3-TB,..\Base-BP3\C-Site-Survey-X
File = H:\44238-004\Drawings\Bid Package 3 - WTP Rehab\Mech\44238-004BP3-M29 Saved by HsCad2 Save date = 6/9/2014 7:39 PM

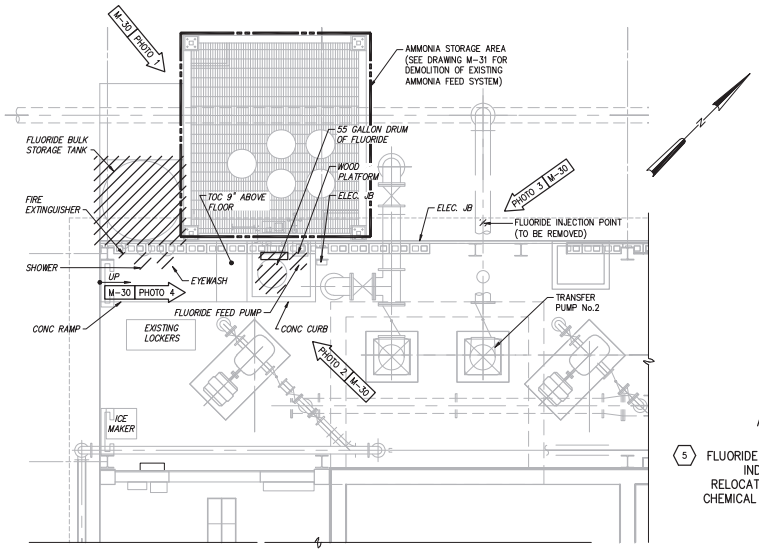

EXISTING PLAN
1/4" = 1'-0"

FLUORIDE PHOTO 1
NTS

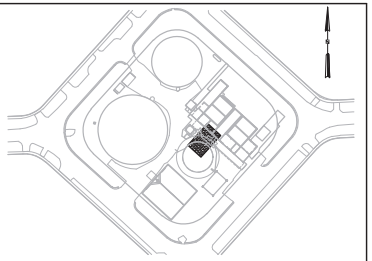

LOCATION MAP

GENERAL NOTES:

1. NO RECORD DRAWINGS EXIST FOR THE EXISTING FLUORIDE FEED SYSTEM. THE EXISTING TANKS, PIPINGS AND PUMP SHOWN ARE CONCEPTUAL IN NATURE AND PRESENTED FOR GENERAL INFORMATION. PHOTOS PROVIDED FOR GENERAL INFORMATION PURPOSES.
2. THE CONTRACTOR SHALL FIELD VERIFY ALL EXISTING CONDITIONS PRIOR TO BID PER THE REQUIREMENTS OF DIVISION 1 OF THE SPECIFICATIONS.
3. CONTRACTOR RETAINS FULL RESPONSIBILITY FOR FIELD VERIFICATION OF ALL ABOVE GROUND IMPROVEMENTS TO BE REMOVED FOR THIS WORK. SUCH VERIFICATION SHALL INCLUDE: STRUCTURAL, ARCHITECTURAL, HVAC, PLUMBING, ELECTRICAL, IRRIGATION, CONTROLS, FREE STANDING EQUIPMENT, LANDSCAPING, AND ANY AND ALL OTHER EXISTING IMPROVEMENTS WITHIN THE BOUNDARY OF THE WORK WHETHER SHOWN HEREIN OR NOT.
4. FOR BELOW GRADE IMPROVEMENTS TO BE REMOVED REFERENCE APPLICABLE CIVIL AND ELECTRICAL DRAWINGS ACCORDINGLY.
5. REFER TO SPECIFICATION SECTION ENTITLED "DEMOLITION OF EXISTING FACILITIES".
6. PRE-BID ACCESS TO THE SITE SHALL BE COORDINATED BY THE CONTRACTOR UPON REQUEST THROUGH A CONTACT TO BE DETERMINED BY THE CITY OF NORTH MIAMI.

KEYED NOTES:

1. FOR CONSTRUCTION SEQUENCING RESTRICTIONS FOR WORK SHOWN ON THIS SHEET, REFERENCE THE SPECIFICATION ENTITLED "SUMMARY OF WORK".
2. REFERENCE STRUCTURAL DRAWINGS FOR REFURBISHMENT OF THIS AREA.
3. FOR REQUIREMENTS RELATED TO DEMOLITION WORK, PROTECTION OF EXISTING FACILITIES AND MAINTENANCE OF OPERATIONS REFERENCE APPLICABLE SPECIFICATIONS IN DIVISION 1.
4. RECORD DRAWINGS FOR THIS SYSTEM ARE NOT AVAILABLE. THE CONTRACTOR SHALL ASSUME REMOVAL OF UP TO 100 FEET OF FLUORIDE PIPING AND SUPPORTS AS MAY BE APPLICABLE SUBJECT TO REVIEW WITH ENGINEER IN FIELD.
5. REFERENCE SPECIFICATION ENTITLED "INTERIM CHEMICAL FEED FACILITY" FOR DETAILED REQUIREMENTS.
6. REMOVE ELECTRICAL CONDUIT AND WIRE BACK TO SOURCE.

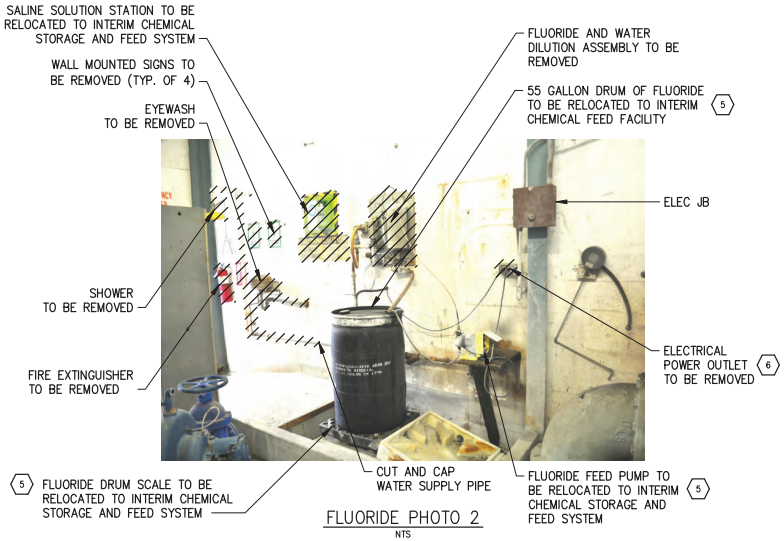

FLUORIDE PHOTO 2
NTS

FLUORIDE PHOTO 3
NTS

FLUORIDE PHOTO 4
NTS

LEGEND:

- EXISTING
- PROPOSED
- PHOTO # – ARROW INDICATES DIRECTION AND POINT OF VIEW OF PHOTO
- TO BE REMOVED

1/4"=1'-0"

NO.	DATE	ISSUED FOR	BY

DESIGNED G.A.B.
DRAWN A.B.C.
CHECKED G.N.C.
PROJ. ENGR. G.A.B.

H. J. VIDAL P.E.
No. 37882

HAZEN AND SAWYER
Environmental Engineers & Scientists
4000 Hollywood Boulevard, Suite 750N
Hollywood, Florida 33021
Certificate of Authorization Number: 2771

SCALE: AS NOTED

CLIENTS PROJECT: –
ENGINEERS PROJECT: 44238-004
CAD REFERENCE: 44238-004BP3-M30

NORTH MIAMI FLORIDA
CITY OF NORTH MIAMI
PUBLIC WORKS UTILITIES

WINSON WATER TREATMENT PLANT
BID PACKAGE 3: WTP REHABILITATION
FLUORIDE FEED SYSTEM DEMOLITION PLAN AND PHOTOS

DATE: JUNE 2014
SHEET: 91 OF 335
DRAWING: M-30

PERMITTING

PLOT DATE: 6/10/2014 2:20 PM BY: HS

XREFs= ..\Tblock\44238-004-BP3-TB,..\Base-BP3\M-BP1-Filters-Plan-Bottom-X,..\Base-BP3\S-BP1-Filters-Plan-Bottom-X

File = H:\44238-004\Drawings\Bid Package 3 - WTP Rehab\Mech\44238-004BP3-M30 Saved by Administrator Save date = 6/9/2014 5:50 PM

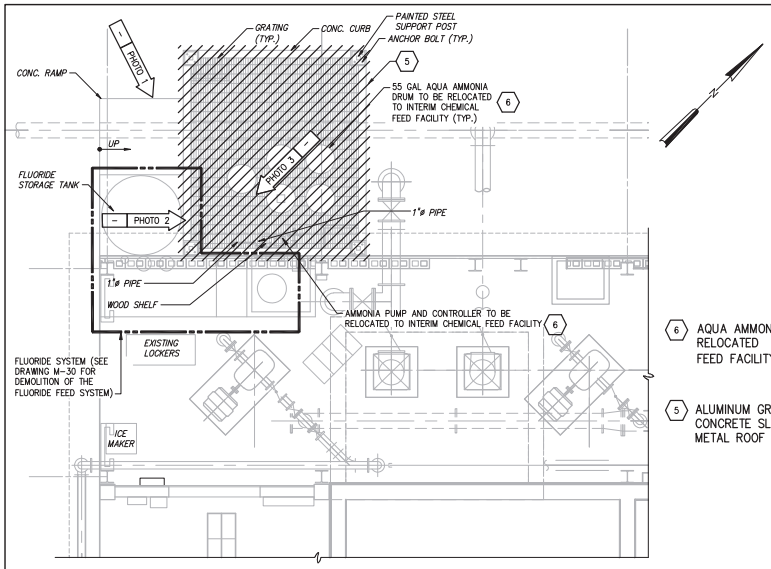

EXISTING PLAN
1/4" = 1'-0"

6 AQUA AMMONIA DRUM TO BE RELOCATED TO INTERIM CHEMICAL FEED FACILITY (TYP. OF 5)

5 ALUMINUM GRATING, CONCRETE CURB, CONCRETE SLAB, METAL POSTS AND METAL ROOF TO BE REMOVED

AMMONIA PHOTO 1
NTS

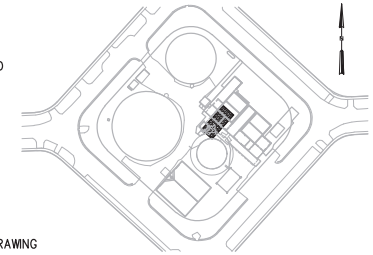

LOCATION MAP

GENERAL NOTES:

1. NO RECORD DRAWINGS EXIST FOR THE EXISTING AMMONIA FEED SYSTEM. THE EXISTING DRUMS, PIPING PUMP, AND STORAGE AREA (INCLUDING GRATING, CONCRETE CURB, CONCRETE SLAB, METAL POSTS AND METAL ROOF) ARE CONCEPTUAL IN NATURE AND PRESENTED FOR GENERAL INFORMATION. PHOTOS PROVIDED FOR GENERAL INFORMATION PURPOSES.
2. THE CONTRACTOR SHALL FIELD VERIFY ALL EXISTING CONDITIONS PRIOR TO BID PER THE REQUIREMENTS OF DIVISION 1 OF THE SPECIFICATIONS.
3. CONTRACTOR RETAINS FULL RESPONSIBILITY FOR FIELD VERIFICATION OF ALL ABOVE GROUND IMPROVEMENTS TO BE REMOVED FOR THIS WORK. SUCH VERIFICATION SHALL INCLUDE: STRUCTURAL, ARCHITECTURAL, HVAC, PLUMBING, ELECTRICAL, IRRIGATION, CONTROLS, FREE STANDING EQUIPMENT, LANDSCAPING, AND ANY AND ALL OTHER EXISTING IMPROVEMENTS WITHIN THE BOUNDARY OF THE WORK WHETHER SHOWN HEREIN OR NOT.
4. FOR BELOW GRADE IMPROVEMENTS TO BE REMOVED REFERENCE APPLICABLE CIVIL AND ELECTRICAL DRAWINGS ACCORDINGLY.
5. REFER TO SPECIFICATION SECTION ENTITLED "DEMOLITION OF EXISTING FACILITIES".
6. PRE-BID ACCESS TO THE SITE SHALL BE COORDINATED BY THE CONTRACTOR UPON REQUEST THROUGH A CONTACT TO BE DETERMINED BY THE CITY OF NORTH MIAMI.

55 GALLON AQUA AMMONIA DRUM TO BE RELOCATED TO INTERIM CHEMICAL FEED FACILITY (TYP. OF 5) 6

AMMONIA PHOTO 2
NTS

"DANGER" SIGN TO BE REMOVED

FLUORIDE DRUM WEIGHT INDICATOR TO BE RELOCATED TO INTERIM CHEMICAL FEED FACILITY 6

ELEC. CONDUIT, WIRE AND OUTLET TO BE REMOVED

1"ø FLUORIDE FEED PIPE

6 AMMONIA PUMP TO BE RELOCATED TO INTERIM CHEMICAL FEED FACILITY

1"ø PIPE

WOOD SHELF TO BE REMOVED

AMMONIA PHOTO 3
NTS

KEYED NOTES:

1. FOR CONSTRUCTION SEQUENCING RESTRICTIONS FOR WORK SHOWN ON THIS SHEET, REFERENCE THE SPECIFICATION ENTITLED "SUMMARY OF WORK".
2. REFERENCE STRUCTURAL DRAWINGS FOR REFURBISHMENT OF THIS AREA.
3. FOR REQUIREMENTS RELATED TO DEMOLITION WORK, PROTECTION OF EXISTING FACILITIES AND MAINTENANCE OF OPERATIONS REFERENCE APPLICABLE SPECIFICATIONS IN DIVISION 1.
4. RECORD DRAWINGS FOR THIS SYSTEM ARE NOT AVAILABLE. THE CONTRACTOR SHALL ASSUME REMOVAL OF THE 1,000 FEET OF AQUEOUS AMMONIA SOLUTION PIPING AND SUPPORTS AS MAY BE APPLICABLE SUBJECT TO REVIEW WITH ENGINEER IN FIELD.
5. FOR A MORE DETAILED REPRESENTATION OF THIS EXISTING AMMONIA STORAGE, AREA SEE EXHIBIT 3 INCLUDED WITH THE SPECIFICATIONS FOR GENERAL INFORMATION PURPOSES ONLY. NEITHER THE CITY NOR THE ENGINEER WARRANT THE CONTENT OF EXHIBIT 3.
6. REFERENCE SPECIFICATION TITLED "INTERIM CHEMICAL FEED FACILITY" FOR DETAILED REQUIREMENTS.

LEGEND:

- EXISTING
- PROPOSED
- PHOTO # — ARROW INDICATES DIRECTION AND POINT OF VIEW OF PHOTO
- TO BE REMOVED

1/4"=1'-0" 1 0 1 2 3 7'

NO.	DATE	ISSUED FOR	BY

DESIGNED G.A.B.
DRAWN A.B.C.
CHECKED G.N.C.
PROJ. ENGR. G.A.B.

H. J. VIDAL P.E.
No. 37882

HAZEN AND SAWYER
Environmental Engineers & Scientists
4000 Hollywood Boulevard, Suite 750N
Hollywood, Florida 33021
Certificate of Authorization Number: 2771

SCALE: AS NOTED

CLIENTS PROJECT: –
ENGINEERS PROJECT: 44238-004
CAD REFERENCE: 44238-004BP3-M31

NORTH MIAMI FLORIDA — CITY OF NORTH MIAMI
PUBLIC WORKS UTILITIES

WINSON WATER TREATMENT PLANT
BID PACKAGE 3: WTP REHABILITATION
AMMONIA FEED SYSTEM
DEMOLITION PLAN AND PHOTOS

DATE: JUNE 2014
SHEET: 92 OF 335
DRAWING: M-31

PERMITTING

PLOT DATE: 6/10/2014 2:23 PM BY: HS

XREFs= ..\Titleck\44238-004-BP3-TB,..\Base-BP3\M-BP1-Filters-Plan-Bottom-X,..\Base-BP3\S-BP1-Filters-Plan-Bottom-X

File = H:\44238-004\Drawings\Bid Package 3 - WTP Rehab\Mech\44238-004BP3-M31 Saved by HScalf Save date = 6/9/2014 7:23 PM

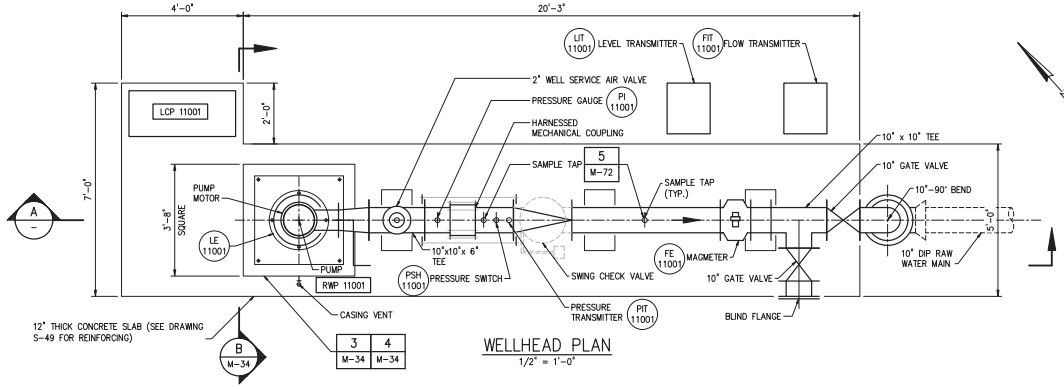

WELLHEAD PLAN
1/2" = 1'-0"

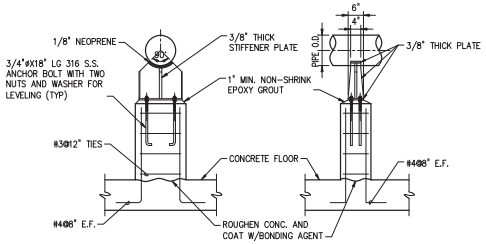

TYPICAL PIPE SUPPORT ON CONCRETE SLAB

DETAIL 1 / –
1/2" = 1'-0"

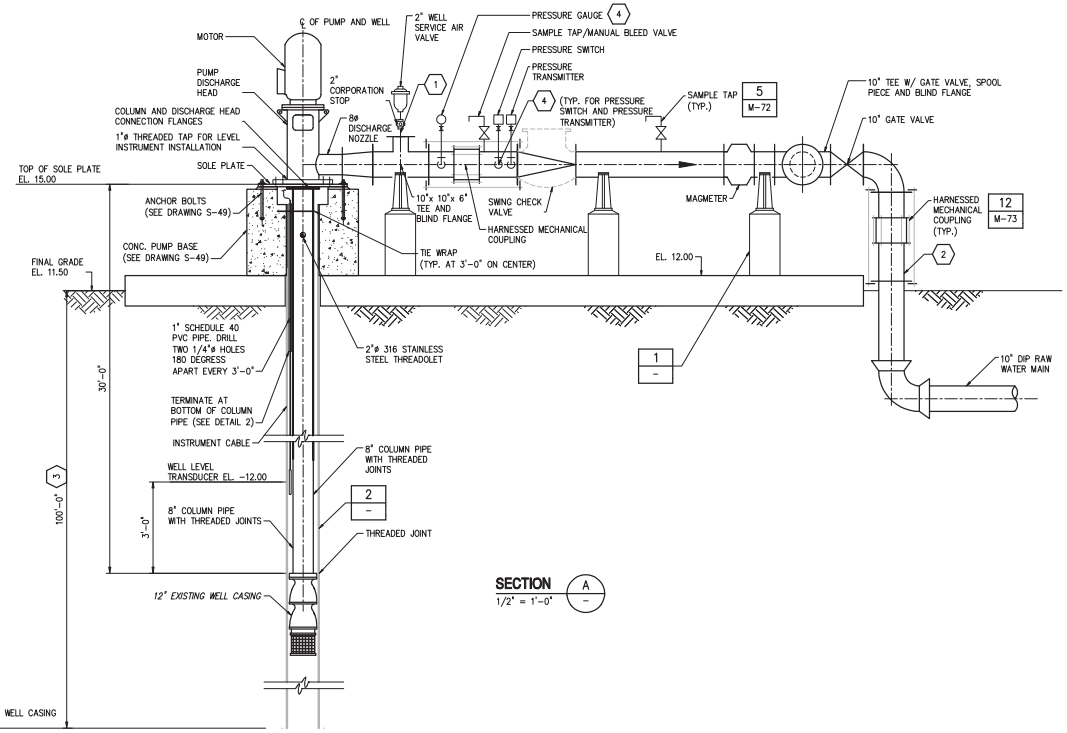

SECTION A –
1/2" = 1'-0"

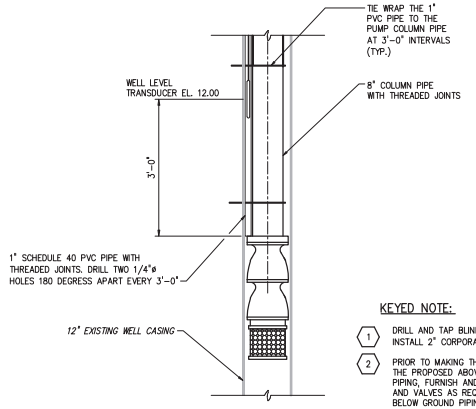

SECTION VIEW

DETAIL 2 / –
NTS

KEYED NOTE:

1. DRILL AND TAP BLIND FLANGE. FURNISH AND INSTALL 2" CORPORATION STOP.
2. PRIOR TO MAKING THE FINAL CONNECTION BETWEEN THE PROPOSED ABOVE GROUND AND BELOW GROUND PIPING, FURNISH AND INSTALL TEMPORARY PIPING AND VALVES AS REQUIRED TO FLUSH THE PROPOSED BELOW GROUND PIPING UTILIZING RAW WATER FROM THE OFF-SITE WELLS. SEE DETAIL 37 FROM DRAWING C-37 FOR ADDITIONAL REQUIREMENTS.
3. DIMENSION BASED ON DATA AVAILABLE IN WATER USE PERMIT No. 13-00059-W.
4. TAPS FOR PRESSURE SWITCHES, PRESSURE TRANSMITTERS AND PRESSURE GAUGES SHALL BE AT THE SPRINGLINE OF THE PROCESS PIPE.

GENERAL NOTES:

1. PROVIDE A TRANSITION PIECE TO ISOLATE DISSIMILAR METALS.
2. CONTROL PANEL NOT SHOWN IN SECTION VIEW FOR CLARITY.

1/2"=1'-0" 12" 0 1 3'

NO.	DATE	ISSUED FOR	BY
1	4/1/14	100% QA COMMENTS	H.J.V.

PLOT DATE: 6/10/2014 2:27 PM BY: HS

DESIGNED G.A.B.
DRAWN G.P.B.
CHECKED G.N.C.
PROJ. ENGR. G.A.B.

H. J. VIDAL P.E.
No. 37882

HAZEN AND SAWYER
Environmental Engineers & Scientists
4000 Hollywood Boulevard, Suite 750N
Hollywood, Florida 33021
Certificate of Authorization Number: 2771

SCALE 1/2"=1'-0"

CLIENTS PROJECT: –
ENGINEERS PROJECT: 44238-004
CAD REFERENCE: 44238-004BP3-M32

NORTH MIAMI FLORIDA
CITY OF NORTH MIAMI
PUBLIC WORKS UTILITIES

WINSON WATER TREATMENT PLANT
BID PACKAGE 3: WTP REHABILITATION
RAW WATER WELL NO. 1
PROPOSED PLAN, SECTIONS AND DETAILS

DATE: JUNE 2014
SHEET: 93 OF 335
DRAWING: M-32

PERMITTING

XREFs= ..\Titleck\44238-004-BP3-TB,..\Base-BP3\M-BP3-WellPumpNo1-Plan

File = H:\44238-004\Drawings\Bid Package 3 - WTP Rehab\Mech\44238-004BP3-M32 Saved by HsCad2 Save date = 6/9/2014 5:57 PM

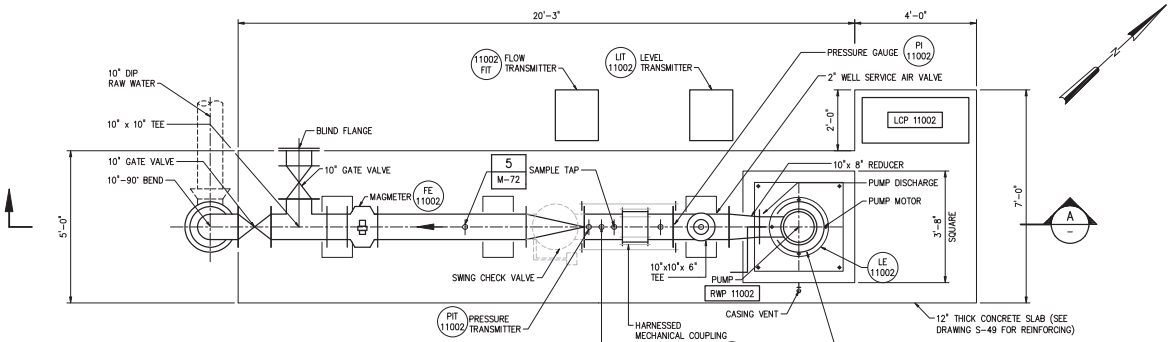

WELLHEAD PLAN

1/2"=1'-0"

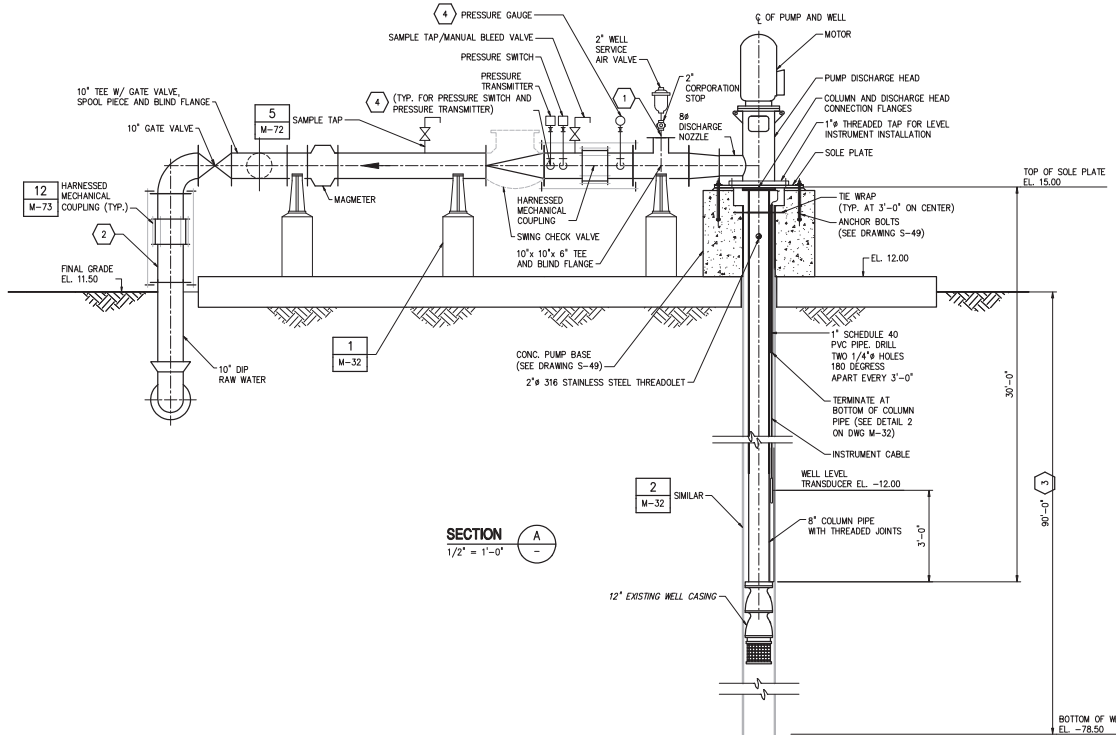

SECTION A

1/2" = 1'-0"

KEYED NOTE:

1. DRILL AND TAP BLIND FLANGE. FURNISH AND INSTALL 2" CORPORATION STOP.
2. PRIOR TO MAKING THE FINAL CONNECTION BETWEEN THE PROPOSED ABOVE GROUND AND BELOW GROUND PIPING, FURNISH AND INSTALL TEMPORARY PIPING AND VALVES AS REQUIRED TO FLUSH THE PROPOSED BELOW GROUND PIPING UTILIZING RAW WATER FROM THE OFF-SITE WELLS. SEE DETAIL 37 FROM DRAWING C-37 FOR ADDITIONAL REQUIREMENTS.
3. DIMENSION BASED ON DATA AVAILABLE IN WATER USE PERMIT No. 13-00059-W.
4. TAPS FOR PRESSURE SWITCHES, PRESSURE TRANSMITTERS AND PRESSURE GAUGES SHALL BE AT THE SPRINGLINE OF THE PROCESS PIPE.

GENERAL NOTES:

1. PROVIDE A TRANSITION PIECE TO ISOLATE DISSIMILAR METALS.
2. CONTROL PANEL NOT SHOWN IN SECTION VIEW FOR CLARITY.

1/2"=1'-0" 12" 0 1 3'

NO.	DATE	ISSUED FOR	BY
1	4/1/14	100% QA COMMENTS	H.J.V.

DESIGNED G.A.B.
DRAWN G.P.B.
CHECKED G.N.C.
PROJ. ENGR. G.A.B.

H. J. VIDAL P.E.
No. 37882

HAZEN AND SAWYER
Environmental Engineers & Scientists
4000 Hollywood Boulevard, Suite 750N
Hollywood, Florida 33021
Certificate of Authorization Number: 2771

SCALE 1/2"=1'-0"

CLIENTS PROJECT: –
ENGINEERS PROJECT: 44238-004
CAD REFERENCE: 44238-004BP3-M33

NORTH MIAMI FLORIDA
CITY OF NORTH MIAMI
PUBLIC WORKS UTILITIES

WINSON WATER TREATMENT PLANT
BID PACKAGE 3: WTP REHABILITATION
RAW WATER WELL NO. 2
PROPOSED PLAN, SECTIONS AND DETAILS

DATE: JUNE 2014
SHEET: 94 OF 335
DRAWING: M-33

PERMITTING

PLOT DATE: 6/10/2014 2:33 PM BY: HS

XREFs= ..\Tblock\44238-004-BP3-TB,..\Base-BP3\M-BP3-WellPumpNo2-Plan

File = H:\44238-004\Drawings\Bid Package 3 - WTP Rehab\Mech\44238-004BP3-M33 Saved by HsCad2 Save date = 6/9/2014 7:28 PM

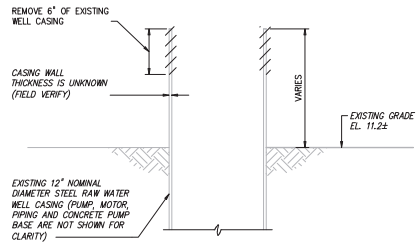

SECTION
EXISTING CONDITION

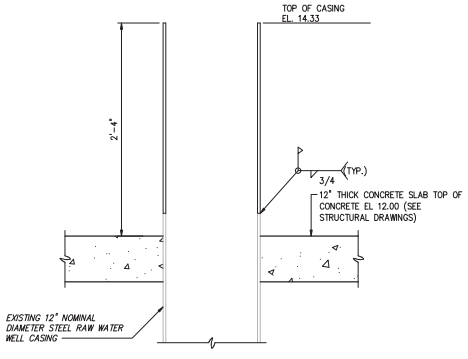

SECTION
PROPOSED CONDITION

WELL CASING MODIFICATIONS

DETAIL 3 / M-32 | 3 / M-33
1 1/2" = 1'-0"

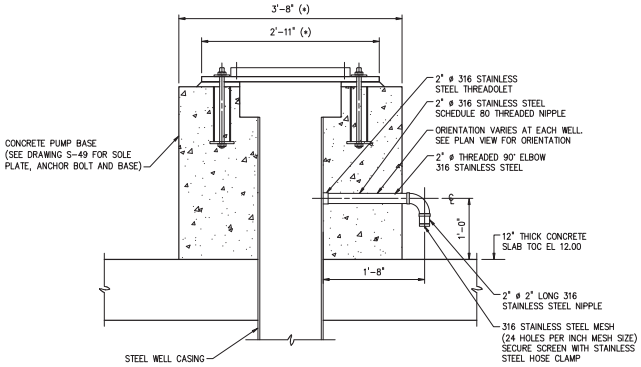

SECTION VIEW

WELL CASING VENT

SECTION B / M-32
1" = 1'-0"

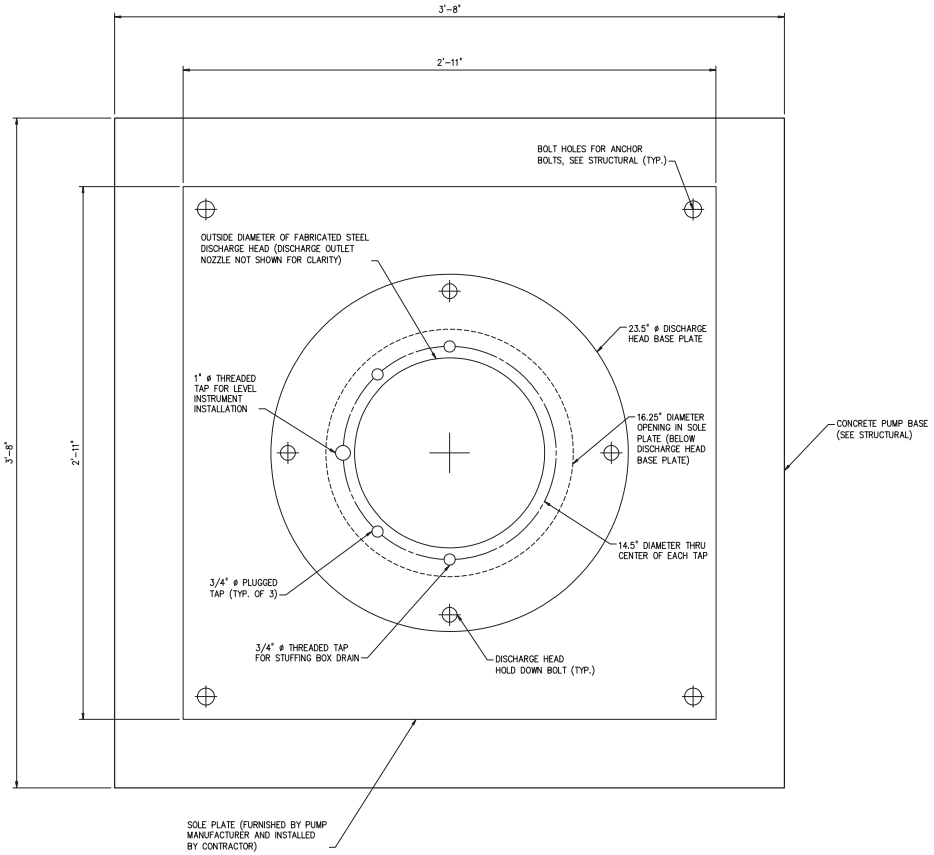

WELLHEAD ENLARGED PLAN

DETAIL 4 / M-32
3" = 1'-0"

LEGEND:

- *EXISTING*
- **PROPOSED**
- **TO BE REMOVED**

3"=1'-0" 2" 0 2 4 6"
1 1/2"=1'-0" 4" 0 1'

NO.	DATE	ISSUED FOR	BY

DESIGNED G.A.B.
DRAWN G.P.B.
CHECKED J.N.M.
PROJ. ENGR. G.A.B.

H. J. VIDAL P.E.
No. 37882

HAZEN AND SAWYER
Environmental Engineers & Scientists
4000 Hollywood Boulevard, Suite 750N
Hollywood, Florida 33021
Certificate of Authorization Number: 2771

SCALE 1 1/2"=1'-0"

CLIENTS PROJECT: –
ENGINEERS PROJECT: 44238-004
CAD REFERENCE: 44238-004BP3-M34

NORTH MIAMI FLORIDA
CITY OF NORTH MIAMI
PUBLIC WORKS UTILITIES

WINSON WATER TREATMENT PLANT
BID PACKAGE 3: WTP REHABILITATION
RAW WATER WELL DETAILS

DATE: JUNE 2014
SHEET: 95 OF 335
DRAWING: M-34

PERMITTING

PLOT DATE: 6/10/2014 2:40 PM BY: HS
XREFs= .\Tblock\44238-004-BP3-TB
File = H:\44238-004\Drawings\Bid Package 3 - WTP Rehab\Mech\44238-004BP3-M34 Saved by HScalf Save date = 6/9/2014 7:05 PM

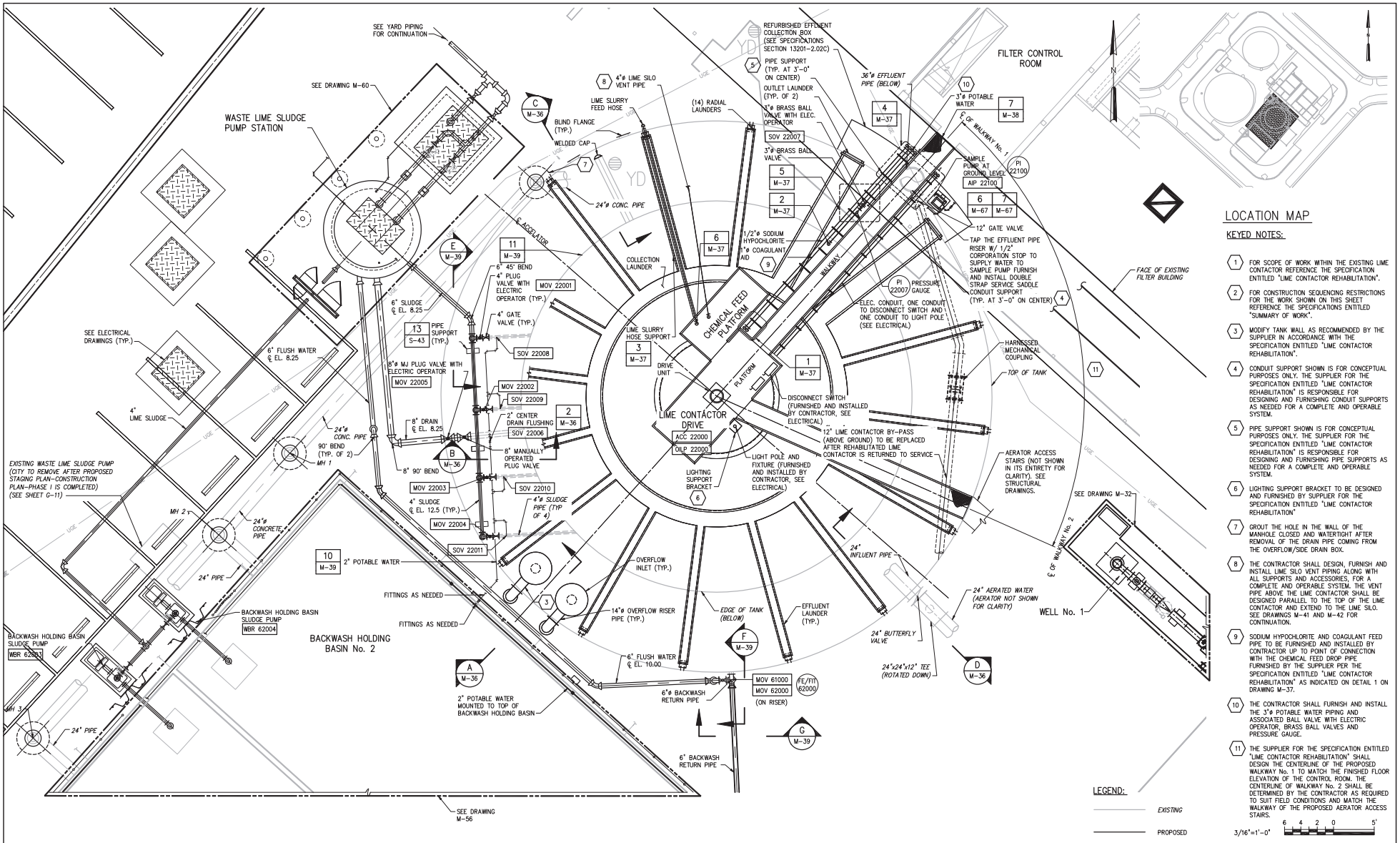

KEYED NOTES:

1. FOR SCOPE OF WORK WITHIN THE EXISTING LIME CONTACTOR REFERENCE THE SPECIFICATION ENTITLED "LIME CONTACTOR REHABILITATION".
2. FOR CONSTRUCTION SEQUENCING RESTRICTIONS FOR THE WORK SHOWN ON THIS SHEET REFERENCE THE SPECIFICATIONS ENTITLED "SUMMARY OF WORK".
3. MODIFY TANK WALL AS RECOMMENDED BY THE SUPPLIER IN ACCORDANCE WITH THE SPECIFICATION ENTITLED "LIME CONTACTOR REHABILITATION".
4. CONDUIT SUPPORT SHOWN IS FOR CONCEPTUAL PURPOSES ONLY. THE SUPPLIER FOR THE SPECIFICATION ENTITLED "LIME CONTACTOR REHABILITATION" IS RESPONSIBLE FOR DESIGNING AND FURNISHING CONDUIT SUPPORTS AS NEEDED FOR A COMPLETE AND OPERABLE SYSTEM.
5. PIPE SUPPORT SHOWN IS FOR CONCEPTUAL PURPOSES ONLY. THE SUPPLIER FOR THE SPECIFICATION ENTITLED "LIME CONTACTOR REHABILITATION" IS RESPONSIBLE FOR DESIGNING AND FURNISHING PIPE SUPPORTS AS NEEDED FOR A COMPLETE AND OPERABLE SYSTEM.
6. LIGHTING SUPPORT BRACKET TO BE DESIGNED AND FURNISHED BY SUPPLIER FOR THE SPECIFICATION ENTITLED "LIME CONTACTOR REHABILITATION"
7. GROUT THE HOLE IN THE WALL OF THE MANHOLE CLOSED AND WATERTIGHT AFTER REMOVAL OF THE DRAIN PIPE COMING FROM THE OVERFLOW/SIDE DRAIN BOX.
8. THE CONTRACTOR SHALL DESIGN, FURNISH AND INSTALL LIME SILO VENT PIPING ALONG WITH ALL SUPPORTS AND ACCESSORIES, FOR A COMPLETE AND OPERABLE SYSTEM. THE VENT PIPE ABOVE THE LIME CONTACTOR SHALL BE DESIGNED PARALLEL TO THE TOP OF THE LIME CONTACTOR AND EXTEND TO THE LIME SILO. SEE DRAWINGS M-41 AND M-42 FOR CONTINUATION.
9. SODIUM HYPOCHLORITE AND COAGULANT FEED PIPE TO BE FURNISHED AND INSTALLED BY CONTRACTOR UP TO POINT OF CONNECTION WITH THE CHEMICAL FEED DROP PIPE FURNISHED BY THE SUPPLIER PER THE SPECIFICATION ENTITLED "LIME CONTACTOR REHABILITATION" AS INDICATED ON DETAIL 1 ON DRAWING M-37.
10. THE CONTRACTOR SHALL FURNISH AND INSTALL THE 3"ø POTABLE WATER PIPING AND ASSOCIATED BALL VALVE WITH ELECTRIC OPERATOR, BRASS BALL VALVES AND PRESSURE GAUGE.
11. THE SUPPLIER FOR THE SPECIFICATION ENTITLED "LIME CONTACTOR REHABILITATION" SHALL DESIGN THE CENTERLINE OF THE PROPOSED WALKWAY No. 1 TO MATCH THE FINISHED FLOOR ELEVATION OF THE CONTROL ROOM. THE CENTERLINE OF WALKWAY No. 2 SHALL BE DETERMINED BY THE CONTRACTOR AS REQUIRED TO SUIT FIELD CONDITIONS AND MATCH THE WALKWAY OF THE PROPOSED AERATOR ACCESS STAIRS.

NO.	DATE	ISSUED FOR	BY
1	4/1/14	100% QA COMMENTS	H.J.V.

DESIGNED G.A.B.
DRAWN O.L.C.
CHECKED G.N.C.
PROJ. ENGR. G.A.B.

H. J. VIDAL P.E.
No. 37882

HAZEN AND SAWYER
Environmental Engineers & Scientists
4000 Hollywood Boulevard, Suite 750N
Hollywood, Florida 33021
Certificate of Authorization Number: 2771

SCALE 3/16"=1'-0"

CLIENTS PROJECT: –
ENGINEERS PROJECT: 44238-004
CAD REFERENCE: 44238-004BP3-M35

NORTH MIAMI FLORIDA
CITY OF NORTH MIAMI
PUBLIC WORKS UTILITIES

WINSON WATER TREATMENT PLANT
BID PACKAGE 3: WTP REHABILITATION

LIME CONTACTOR REHABILITATION
PROPOSED PLAN

DATE: JUNE 2014
SHEET: 96 OF 335
DRAWING: M-35

PERMITTING

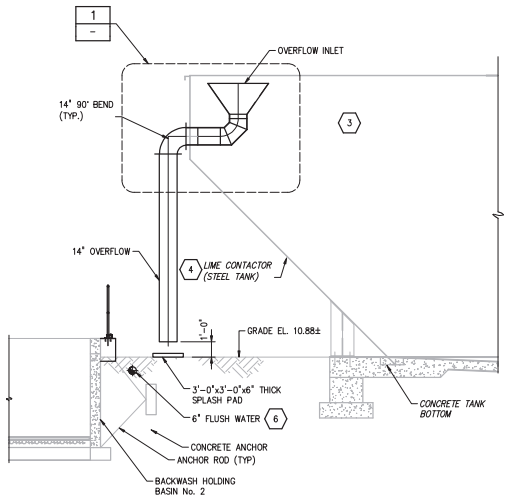

SECTION A / M-35
1/4" = 1'-0"

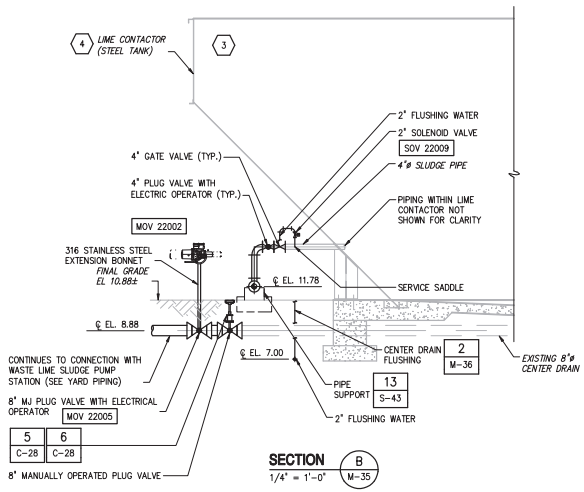

SECTION B / M-35
1/4" = 1'-0"

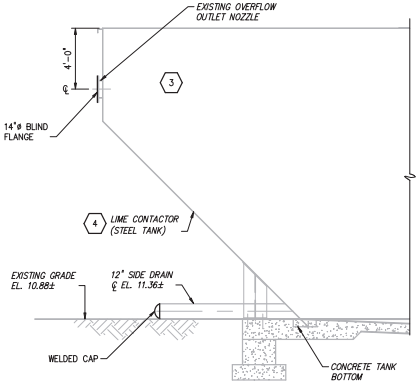

SECTION C / M-35
1/4" = 1'-0"

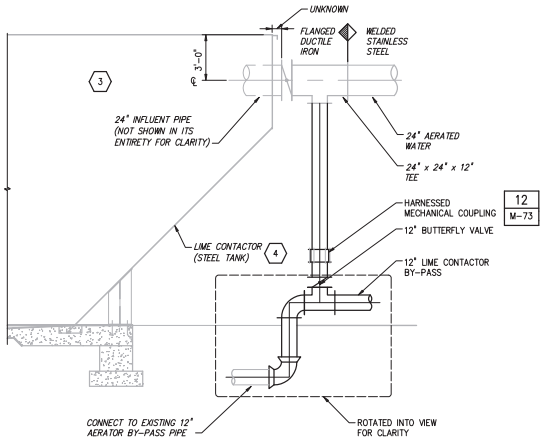

SECTION D / M-35
1/4" = 1'-0"

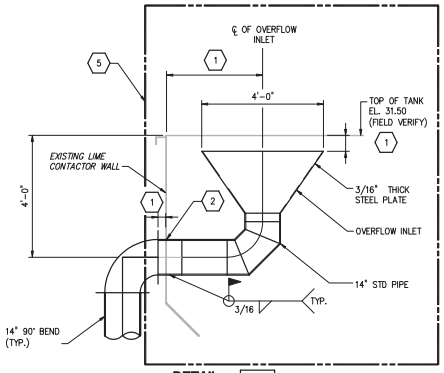

DETAIL 1 / –
NTS

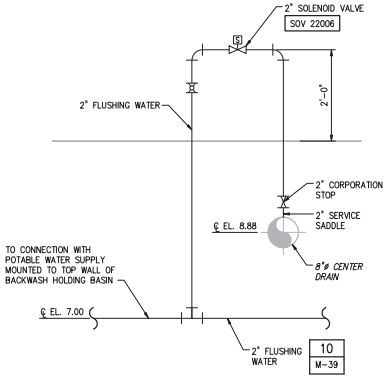

SECTION VIEW

CENTER DRAIN FLUSHING DETAIL

DETAIL 2 / M-35
NTS

GENERAL NOTE:

1. UNLESS OTHERWISE NOTED, THE PROPOSED ITEMS SHOWN ON THIS DRAWING SHALL BE FURNISHED AND INSTALLED BY THE CONTRACTOR.

KEYED NOTES:

1. AS RECOMMENDED BY SUPPLIER UNDER SPECIFICATION ENTITLED "LIME CONTACTOR REHABILITATION"
2. MODIFY EXISTING TANK WALL AS RECOMMENDED BY SUPPLIER UNDER THE SPECIFICATION ENTITLED "LIME CONTACTOR REHABILITATION"
3. INTERIOR PIPING (EXCEPT WHERE INDICATED) AND COMPONENTS WITHIN THE LIME CONTACTOR ARE NOT SHOWN FOR CLARITY.
4. CLEAN, PREPARE AND PAINT THE INTERIOR AND EXTERIOR OF THE EXISTING TANK PER THE REQUIREMENTS OF SPECIFICATION ENTITLED "PAINTING".
5. DESIGNED AND FURNISHED BY SUPPLIER FOR SPECIFICATION ENTITLED "LIME CONTACTOR REHABILITATION" AND INSTALLED BY CONTRACTOR.
6. COORDINATE LOCATION OF PIPING TO AVOID CONFLICT WITH EXISTING CONCRETE ANCHOR AND ANCHOR RODS.

EXISTING

PROPOSED

1/4"=1'-0" 1 0 1 2 3 7'

NO.	DATE	ISSUED FOR	BY
1	4/1/14	100% QA COMMENTS	H.J.V.

DESIGNED G.A.B.
DRAWN G.P.B.
CHECKED G.N.C.
PROJ. ENGR. G.A.B.

H. J. VIDAL P.E.
No. 37882

HAZEN AND SAWYER
Environmental Engineers & Scientists
4000 Hollywood Boulevard, Suite 750N
Hollywood, Florida 33021
Certificate of Authorization Number: 2771

SCALE: AS NOTED

CLIENTS PROJECT: –
ENGINEERS PROJECT: 44238-004
CAD REFERENCE: 44238-004BP3-M36

NORTH MIAMI FLORIDA
CITY OF NORTH MIAMI
PUBLIC WORKS UTILITIES

WINSON WATER TREATMENT PLANT
BID PACKAGE 3: WTP REHABILITATION

LIME CONTACTOR REHABILITATION
SECTIONS AND DETAILS

DATE: JUNE 2014
SHEET: 97 OF 335
DRAWING: M-36

PERMITTING

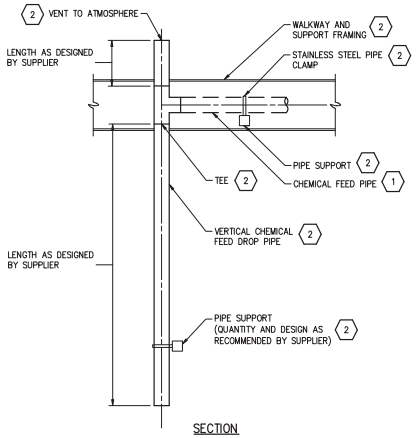

SECTION

TYPICAL CHEMICAL FEED
FOR COAGULANT AND SODIUM HYPOCHLORITE

DETAIL 1 / M-35
NTS

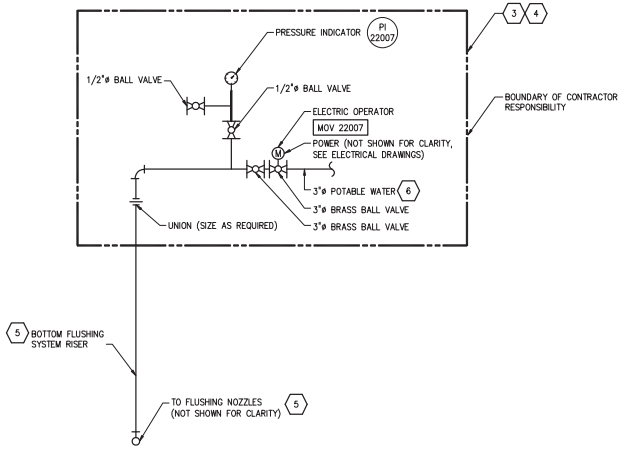

ELEVATION VIEW

BOTTOM FLUSHING SYSTEM
WATER SUPPLY SCHEMATIC

DETAIL 2 / M-35
NTS

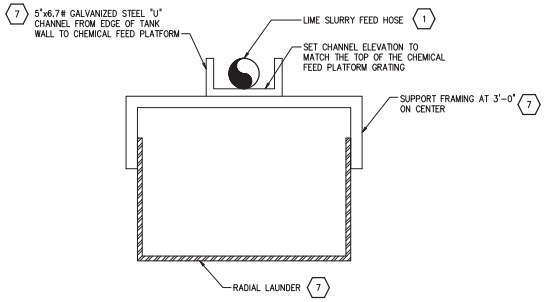

SECTION VIEW

LIME SLURRY HOSE SUPPORT

DETAIL 3 / M-35
NTS

KEYED NOTES:

1. FURNISHED AND INSTALLED BY CONTRACTOR.
2. THE VERTICAL CHEMICAL FEED DROP PIPE, TEE, VENT TO ATMOSPHERE, WALKWAY AND SUPPORT FRAMING, PIPE CLAMPS, AND ALL NECESSARY PIPE SUPPORTS AND ACCESSORIES FOR A COMPLETE AND OPERABLE SYSTEM SHALL BE DESIGNED AND FURNISHED BY THE SUPPLIER OF THE SPECIFICATION ENTITLED "LIME CONTACTOR REHABILITATION" AND INSTALLED BY CONTRACTOR.
3. WALKWAY AND PIPE SUPPORTS NOT SHOWN CLARITY.
4. THE PIPING, VALVES, INSTRUMENTS, ELECTRIC OPERATOR AND ALL REQUIRED ACCESSORIES FOR A COMPLETE AND OPERABLE SYSTEM SHOWN IN THE DESIGNATED BOUNDARY OF CONTRACTOR RESPONSIBILITY SHALL BE FURNISHED AND INTALLED BY CONTRACTOR.
5. THE BOTTOM FLUSHING SYSTEM RISER, FLUSHING SYSTEM NOZZLES AND ALL OTHER PIPING AND ACCESSORIES REQUIRED FOR A COMPLETE AND OPERABLE FLUSHING SYSTEM SHALL BE DESIGNED AND FURNISHED BY THE SUPPLIER FOR THE SPECIFICATION ENTITLED "LIME CONTACTOR REHABILITATION" AND INSTALLED BY CONTRACTOR.
6. THE 3"ø POTABLE WATER SUPPLY SHALL BE OBTAINED FROM A LOCATION SELECTED BY THE CITY IN THE FIELD. FOR THE PURPOSES OF BIDDING ASSUME FURNISHING AND INSTALLING 300 FEET OF 3"ø POTABLE WATER PIPE WITH SUPPORTS AT 3'-0" ON CENTER.
7. DESIGNED AND FURNISHED BY SUPPLIER FOR SPECIFICATION ENTITLED "LIME CONTACTOR REHABILITATION" AND INSTALLED BY CONTRACTOR.
8. FURNISH AND INSTALL TEMPORARY SODIUM HYPOCHLORITE PIPING FROM THE PROPOSED SODIUM HYPOCHLORITE FACILITY AS REQUIRED TO MAINTAIN PLANT OPERATIONS WHEN THE LIME CONTACTOR IS BYPASSED. REMOVE TEMPORARY PIPING AFTER COMPLETION OF THE LIME CONTACTOR REHAB. TURN OVER THE INJECTION ASSEMBLY TO THE CITY. INSTALL PLUG IN CORPORATION STOP.
9. SODIUM HYPOCHLORITE AND COAGULANT FEED PIPE TO BE FURNISHED AND INSTALLED BY CONTRACTOR UP TO POINT OF CONNECTION WITH THE CHEMICAL FEED DROP PIPE FURNISHED BY THE SUPPLIER PER THE SPECIFICATION ENTITLED "LIME CONTACTOR REHABILITATION" AS INDICATED ON DETAIL 1 ON DRAWING M-37.
10. THE CONTRACTOR SHALL FURNISH AND INSTALL THE 3"ø POTABLE WATER PIPING AND ASSOCIATED BALL VALVE WITH ELECTRIC OPERATOR, BRASS BALL VALVES AND PRESSURE GAUGE.

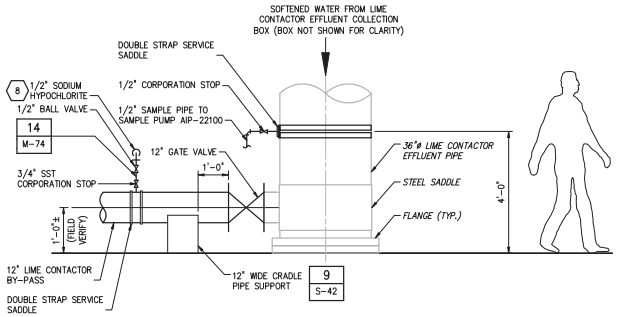

ELEVATION VIEW OF 36"ø
LIME CONTACTOR EFFLUENT PIPE

DETAIL 4 / M-35
1/2" = 1'-0"

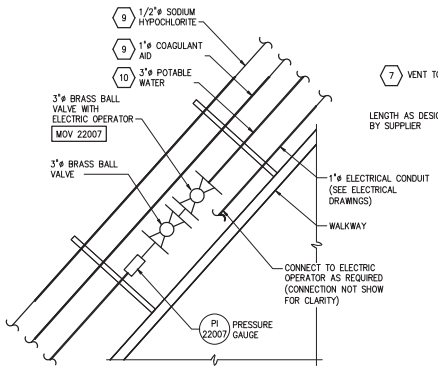

ENLARGED PLAN

DETAIL 5 / M-35
NTS

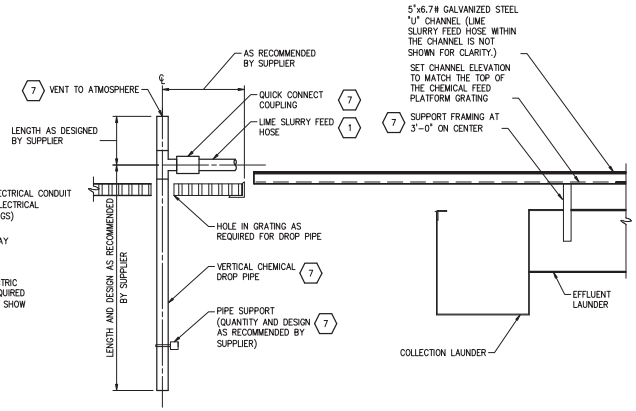

SECTION VIEW

LIME SLURRY FEED

DETAIL 6 / M-35
3/4" = 1'-0"

LEGEND:

EXISTING

PROPOSED

3/4"=1'-0" 6" 0 1 2'

1/2"=1'-0" 12" 0 1 3'

NO.	DATE	ISSUED FOR	BY
1	4/1/14	100% QA COMMENTS	H.J.V.

DESIGNED G.A.B.
DRAWN G.P.B.
CHECKED G.N.C.
PROJ. ENGR. G.A.B.

H. J. VIDAL P.E.
No. 37882

HAZEN AND SAWYER
Environmental Engineers & Scientists
4000 Hollywood Boulevard, Suite 750N
Hollywood, Florida 33021
Certificate of Authorization Number: 2771

SCALE: AS NOTED

CLIENTS PROJECT: –
ENGINEERS PROJECT: 44238-004
CAD REFERENCE: 44238-004BP3-M37

NORTH MIAMI FLORIDA
CITY OF NORTH MIAMI
PUBLIC WORKS UTILITIES

WINSON WATER TREATMENT PLANT
BID PACKAGE 3: WTP REHABILITATION

LIME CONTACTOR REHABILITATION
SECTIONS AND DETAILS

DATE: JUNE 2014
SHEET: 98 OF 335
DRAWING: M-37

PERMITTING

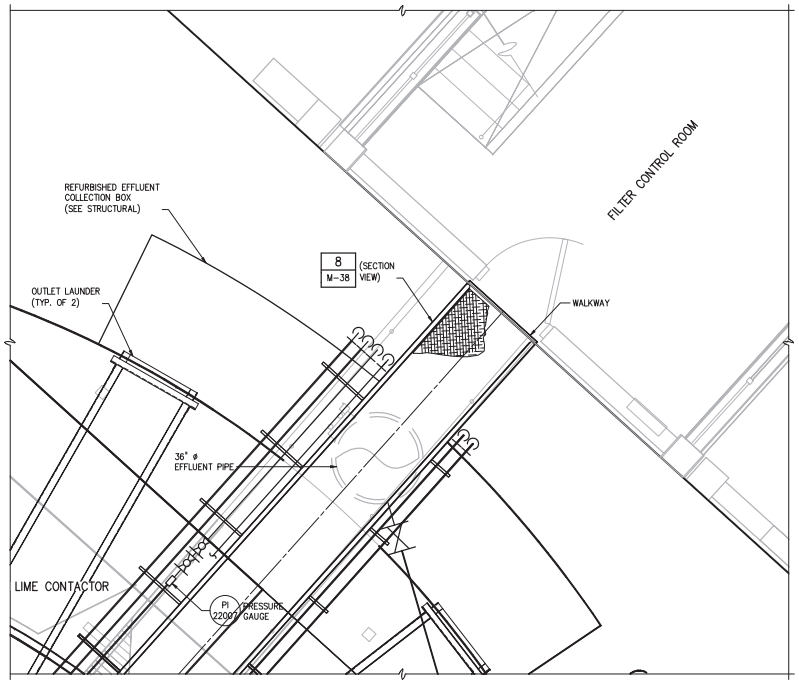

PLAN AT ELEVATION 35 ±

DETAIL 7 / M-35
1/2" = 1'-0"

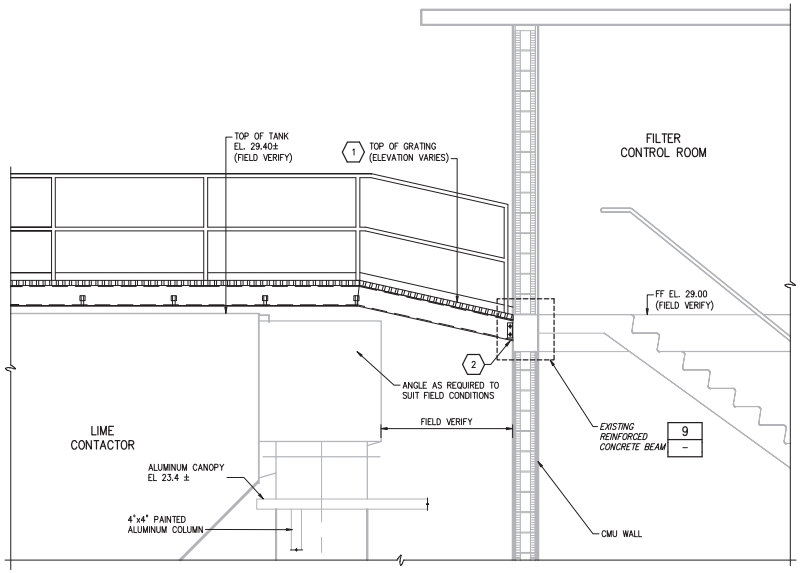

SECTION

DETAIL 8 / –
1/2" = 1'-0"

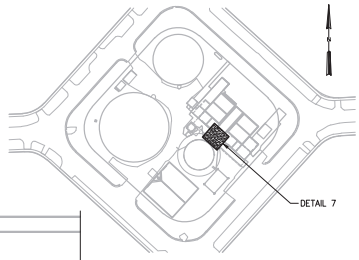

LOCATION MAP

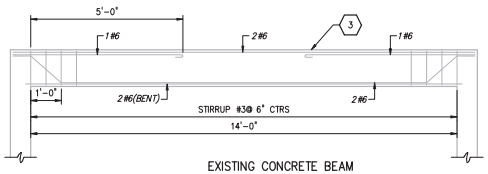

EXISTING CONCRETE BEAM PLAN VIEW

DETAIL 9 / –
NTS

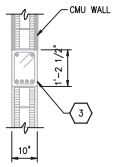

SECTION

KEYED NOTES:

1. SLOPE WALKWAY AS REQUIRED TO MATCH FILTER CONTROL ROOM FINISHED FLOOR ELEVATION.
2. THE SUPPLIER FOR THE SPECIFICATION ENTITLED "LIME CONTACTOR REHABILITATION" SHALL DESIGN AND FURNISH THE CONNECTION BETWEEN THE PROPOSED WALKWAY SUPPORT FRAMING AND THE EXISTING REINFORCED CONCRETE BEAM. UPON REQUEST, THE SUPPLIER FOR THE SPECIFICATION ENTITLED "LIME CONTACTOR REHABILITATION" SHALL FURNISH CALCULATIONS AS REQUIRED BY PERMITTING AGENCIES SIGNED AND SEALED BY A PROFESSIONAL ENGINEER LICENSED IN THE STATE OF FLORIDA.
3. EXISTING CONCRETE BEAM IS SHOWN FOR INFORMATIONAL PURPOSES.

LEGEND:

EXISTING
PROPOSED

1/2"=1'-0" 12" 0 1 3'

NO.	DATE	ISSUED FOR	BY

DESIGNED G.A.B.
DRAWN G.P.B.
CHECKED J.N.M.
PROJ. ENGR. G.A.B.

H. J. VIDAL P.E.
No. 37882

HAZEN AND SAWYER
Environmental Engineers & Scientists
4000 Hollywood Boulevard, Suite 750N
Hollywood, Florida 33021
Certificate of Authorization Number: 2771

SCALE: AS NOTED

CLIENTS PROJECT: –
ENGINEERS PROJECT: 44238-004
CAD REFERENCE: 44238-004BP3-M38

NORTH MIAMI FLORIDA
CITY OF NORTH MIAMI
PUBLIC WORKS UTILITIES

WINSON WATER TREATMENT PLANT
BID PACKAGE 3: WTP REHABILITATION
LIME CONTACTOR REHABILITATION DETAILS

DATE: JUNE 2014
SHEET: 99 OF 335
DRAWING: M-38

PERMITTING

File = H:\44238-004\Drawings\Bid Package 3 - WTP Rehab\Mech\44238-004BP3-M38 Saved by HScalll Save date = 6/9/2014 5:12 PM

PLOT DATE: 6/10/2014 3:04 PM BY: HS

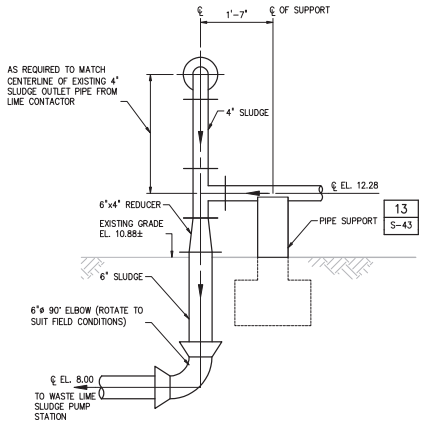

SECTION E / M-35
3/4" = 1'-0"

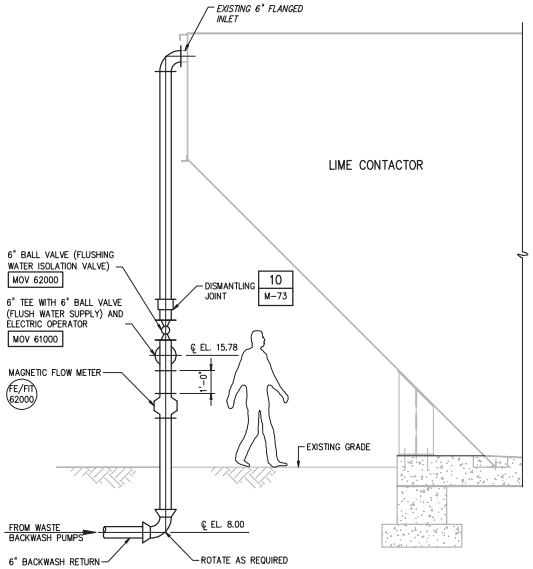

SECTION F / M-35
3/8" = 1'-0"

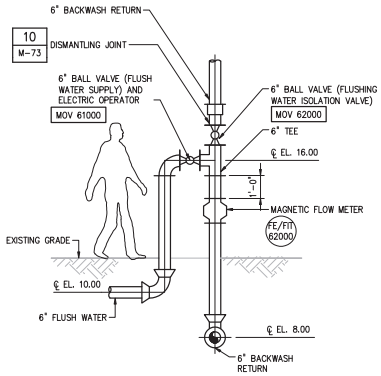

SECTION G / M-35
3/8" = 1'-0"

NOTE:

1. FURNISH AND INSTALL SERVICE SADDLES AT ALL CONNECTIONS BETWEEN EXISTING AND PROPOSED PIPE.

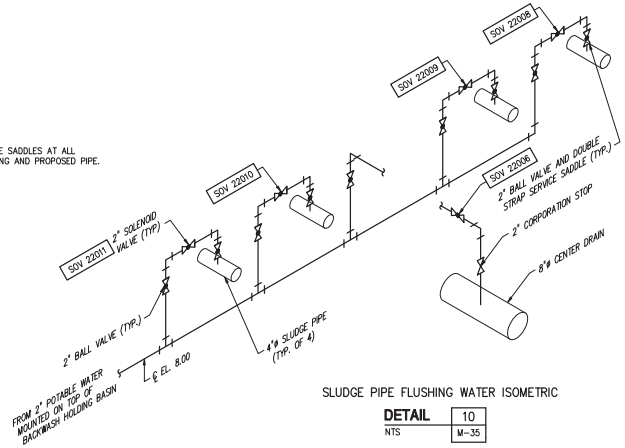

SLUDGE PIPE FLUSHING WATER ISOMETRIC

DETAIL 10 / M-35
NTS

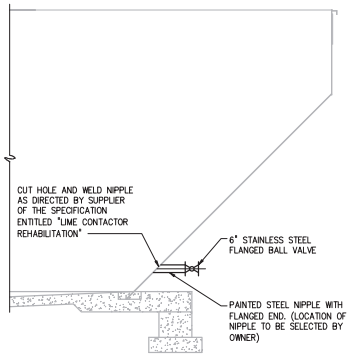

TANK MAINTENANCE CLEAN-OUT CONNECTION

DETAIL 11 / M-35
NTS

LEGEND:

EXISTING
PROPOSED

3/8"=1'-0" 12" 0 1 2 4'
3/4"=1'-0" 6" 0 1 2'

NO.	DATE	ISSUED FOR	BY

DESIGNED G.A.B.
DRAWN G.P.B.
CHECKED G.N.C.
PROJ. ENGR. G.A.B.

H. J. VIDAL P.E.
No. 37882

HAZEN AND SAWYER
Environmental Engineers & Scientists
4000 Hollywood Boulevard, Suite 750N
Hollywood, Florida 33021
Certificate of Authorization Number: 2771

SCALE: AS NOTED

CLIENTS PROJECT: –
ENGINEERS PROJECT: 44238-004
CAD REFERENCE: 44238-004BP3-M39

NORTH MIAMI FLORIDA
CITY OF NORTH MIAMI
PUBLIC WORKS UTILITIES

WINSON WATER TREATMENT PLANT
BID PACKAGE 3: WTP REHABILITATION

LIME CONTACTOR REHABILITATION
SECTIONS AND DETAILS

DATE: JUNE 2014
SHEET: 100 OF 335
DRAWING: M-39

PERMITTING

PLOT DATE: 6/10/2014 3:07 PM BY: HS
XREFs= ..\Tblock\44238-004-BP3-TB,..\Base-BP3\M-BP3-LimeContactor-Sections
File = H:\44238-004\Drawings\Bid Package 3 - WTP Rehab\Mech\44238-004BP3-M39 Saved by HScalf Save date = 6/9/2014 9:05 PM

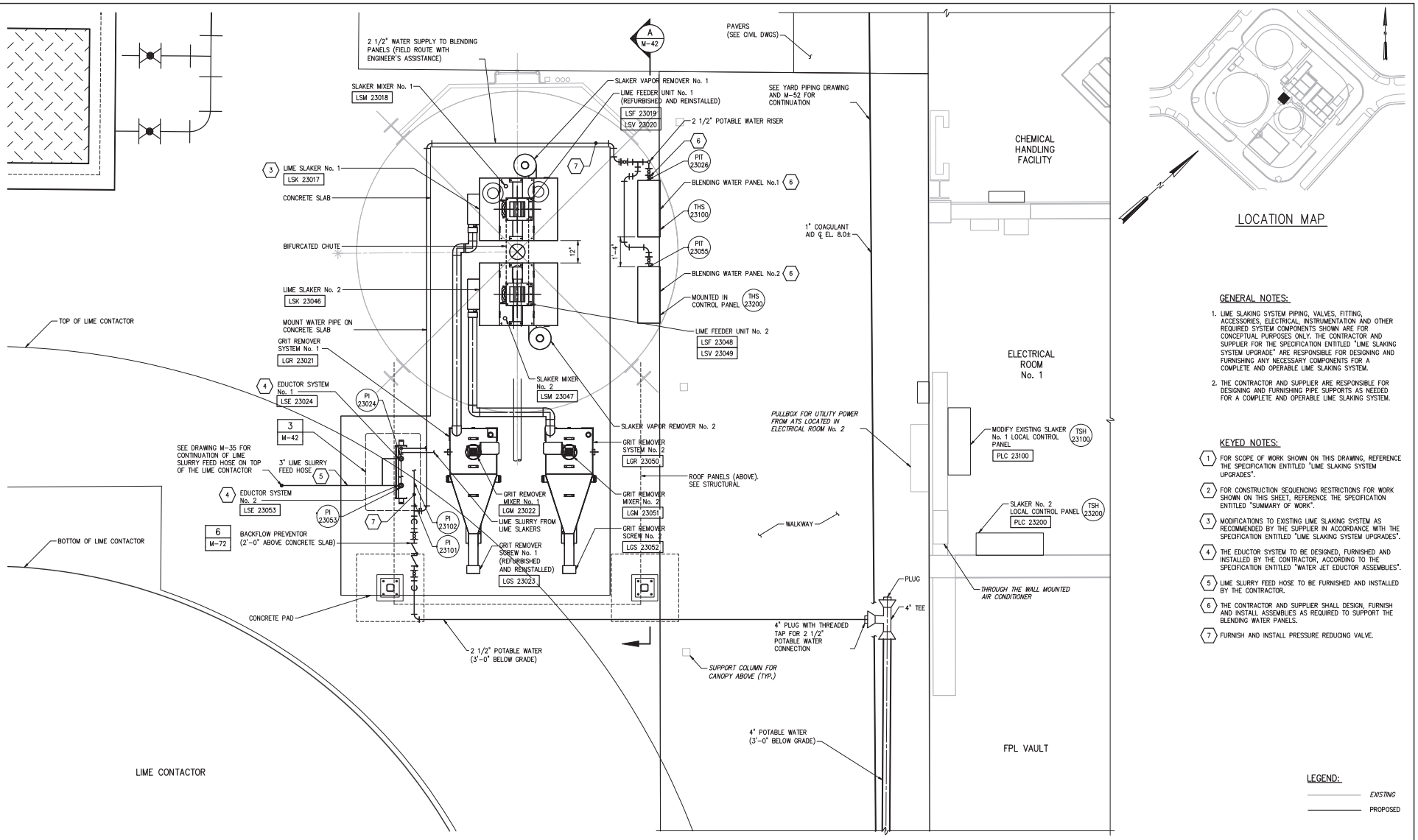

NO.	DATE	ISSUED FOR	BY
1	4/1/14	100% QA COMMENTS	H.J.V.

DESIGNED G.A.B.
DRAWN G.P.B.
CHECKED G.N.C.
PROJ. ENGR. G.A.B.

H. J. VIDAL P.E.
No. 37882

HAZEN AND SAWYER
Environmental Engineers & Scientists
4000 Hollywood Boulevard, Suite 750N
Hollywood, Florida 33021
Certificate of Authorization Number: 2771

SCALE 1/2"=1'-0"

CLIENTS PROJECT: –
ENGINEERS PROJECT: 44238-004
CAD REFERENCE: 44238-004BP3-M40

NORTH MIAMI FLORIDA
CITY OF NORTH MIAMI
PUBLIC WORKS UTILITIES

WINSON WATER TREATMENT PLANT
BID PACKAGE 3: WTP REHABILITATION
LIME SLAKER AND SILO MODIFICATIONS PLAN

DATE: JUNE 2014
SHEET: 101 OF 335
DRAWING: M-40

PERMITTING

File = H:\44238-004\Drawings\Bid Package 3 - WTP Rehab\Mech\44238-004BP3-M40 Saved by HsCad2 Save date = 6/9/2014 8:48 PM

PLOT DATE: 6/10/2014 3:37 PM BY: HS

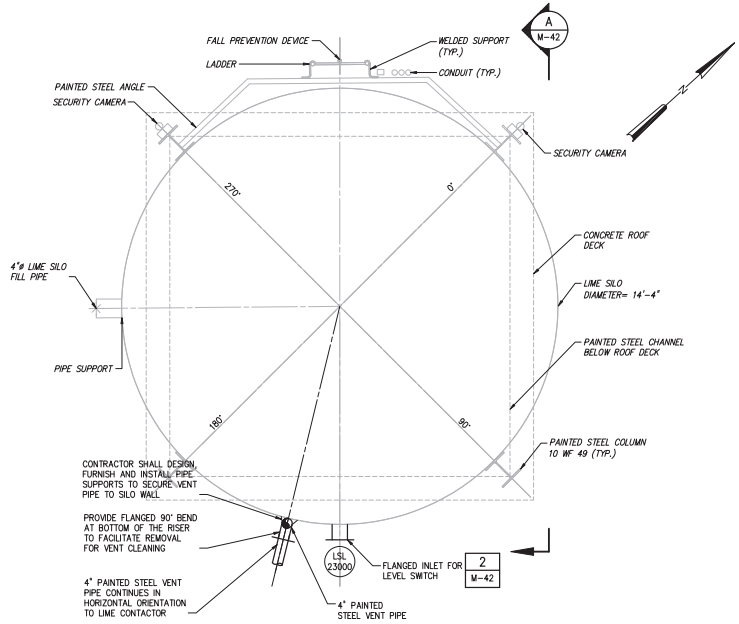

INTERMEDIATE PLAN
1/2"=1'-0"

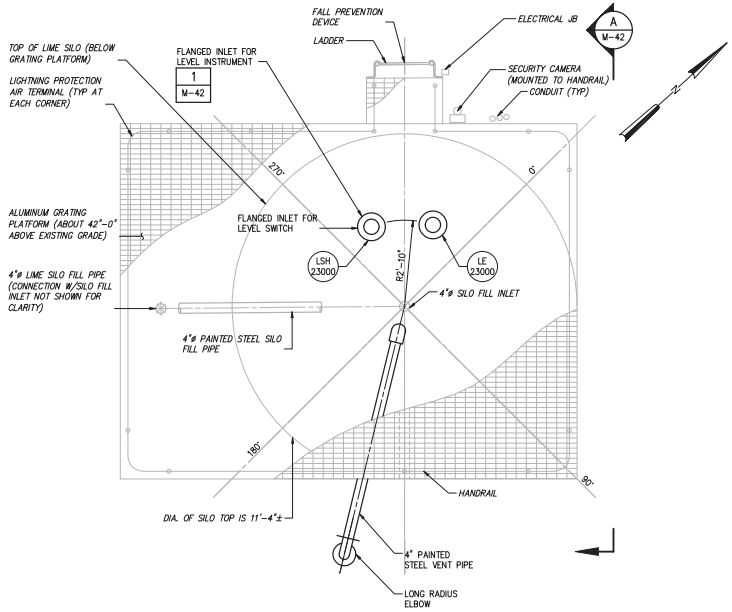

UPPER PLAN AT 45 FEET ± ABOVE GROUND SURFACE
1/2"=1'-0"

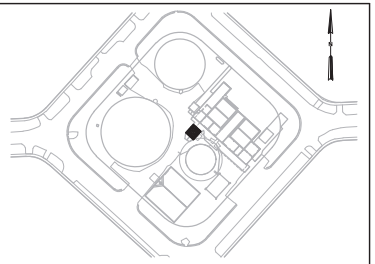

LOCATION MAP

LEGEND:

EXISTING

PROPOSED

1/2"=1'-0"

12" 0 1 3'

NO.	DATE	ISSUED FOR	BY

DESIGNED G.A.B.
DRAWN G.P.B.
CHECKED G.N.C.
PROJ. ENGR. G.A.B.

H. J. VIDAL P.E.
No. 37882

HAZEN AND SAWYER
Environmental Engineers & Scientists
4000 Hollywood Boulevard, Suite 750N
Hollywood, Florida 33021
Certificate of Authorization Number: 2771

SCALE 1/2"=1'-0"

CLIENTS PROJECT: –
ENGINEERS PROJECT: 44238-004
CAD REFERENCE: 44238-004BP3-M41

NORTH MIAMI FLORIDA
CITY OF NORTH MIAMI
PUBLIC WORKS UTILITIES

WINSON WATER TREATMENT PLANT
BID PACKAGE 3: WTP REHABILITATION
LIME SLAKER AND SILO MODIFICATIONS PLANS

DATE: JUNE 2014
SHEET: 102 OF 335
DRAWING: M-41

PERMITTING

PLOT DATE: 6/10/2014 3:42 PM BY: HS

XREFs= ..\Tblock\44238-004-BP3-TB,..\Base-BP3\M-BP3-LimeSilo-Plans-X,..\Base-BP3\M-BP3-LimeSilo-Plans-S,..\Base-BP3\M-BP3-LimeSlaker-Plan

File = H:\44238-004\Drawings\Bid Package 3 - WTP Rehab\Mech\44238-004BP3-M41 Saved by HScalil Save date = 6/9/2014 8:10 PM

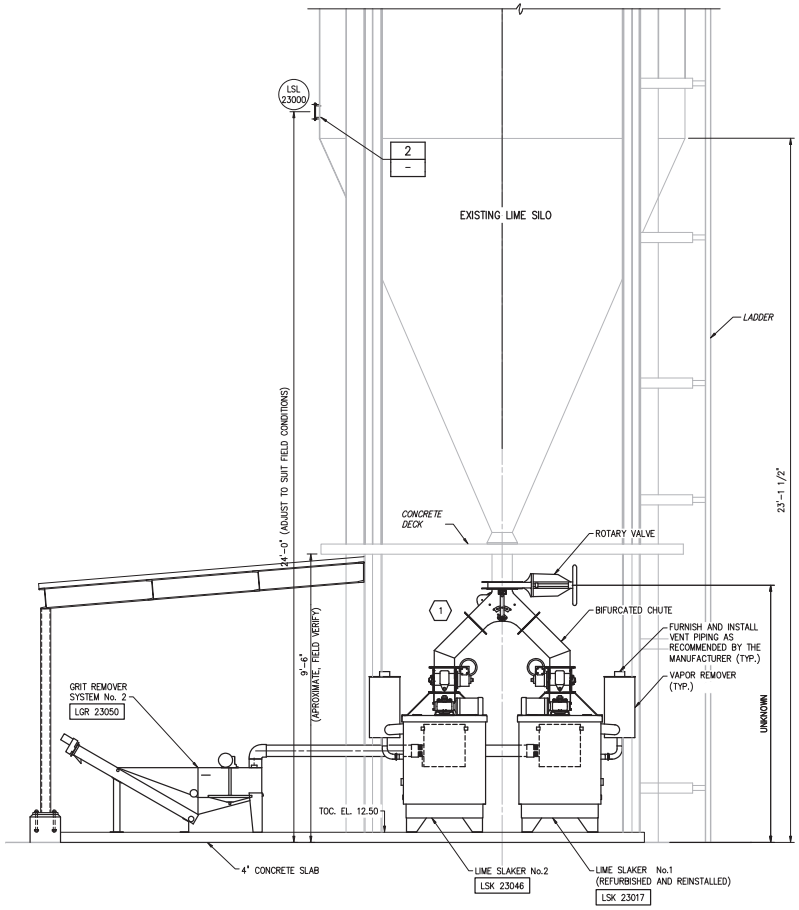

SECTION A / M-41
1/2" = 1'-0"

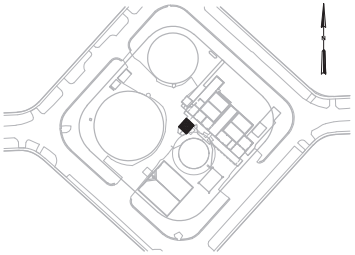

LOCATION MAP

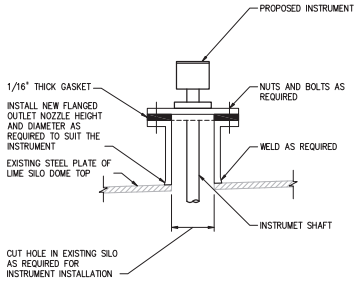

DETAIL 1 / M-41
NTS

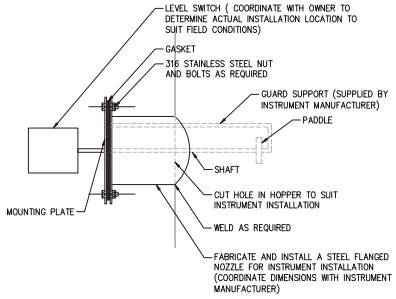

DETAIL 2 / M-41
NTS

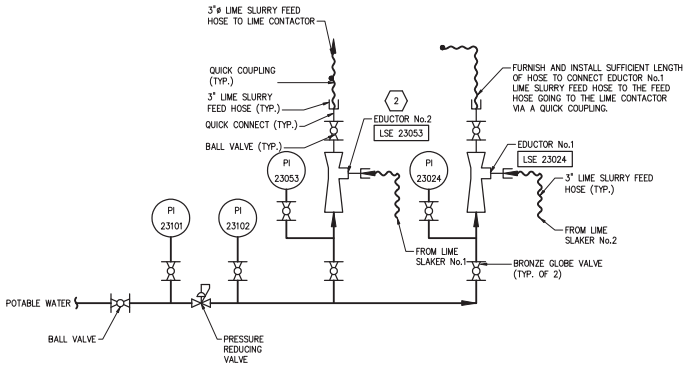

LIME SLURRY SOLUTION EDUCTOR ASSEMBLY

DETAIL 3 / M-40
NTS

KEYED NOTES:

1. MODIFICATION TO THE LIME SLAKING SYSTEM CHUTE AND EXISTING SILO ISOLATION VALVE, AS RECOMMENDED BY THE SUPPLIER IN ACCORDANCE WITH SPECIFICATION ENTITLED "LIME SLAKING SYSTEM UPGRADES".
2. THE CONTRACTOR SHALL PROVIDE A STAINLESS STEEL ASSEMBLY AS REQUIRED TO SUPPORT THE LIME SLURRY SOLUTION EDUCTORS AND ASSOCIATED COMPONENTS.

LEGEND:

EXISTING
PROPOSED

1/2"=1'-0"
12" 0 1 3'

NO.	DATE	ISSUED FOR	BY

PLOT DATE: 6/10/2014 3:45 PM BY: HS

DESIGNED G.A.B.
DRAWN G.P.B.
CHECKED G.N.C.
PROJ. ENGR. G.A.B.

H. J. VIDAL P.E.
No. 37882

HAZEN AND SAWYER
Environmental Engineers & Scientists
4000 Hollywood Boulevard, Suite 750N
Hollywood, Florida 33021
Certificate of Authorization Number: 2771

SCALE: AS NOTED

CLIENTS PROJECT: –
ENGINEERS PROJECT: 44238-004
CAD REFERENCE: 44238-004BP3-M42

NORTH MIAMI FLORIDA
CITY OF NORTH MIAMI
PUBLIC WORKS UTILITIES

WINSON WATER TREATMENT PLANT
BID PACKAGE 3: WTP REHABILITATION

LIME SLAKER AND SILO MODIFICATIONS
SECTION AND DETAILS

DATE: JUNE 2014
SHEET: 103 OF 335
DRAWING: M-42

PERMITTING

XREFs= ..\Block\44238-004-BP3-TB

File = H:\44238-004\Drawings\Bid Package 3 - WTP Rehab\Mech\44238-004BP3-M42 Saved by HScalll Save date = 6/9/2014 9:13 PM

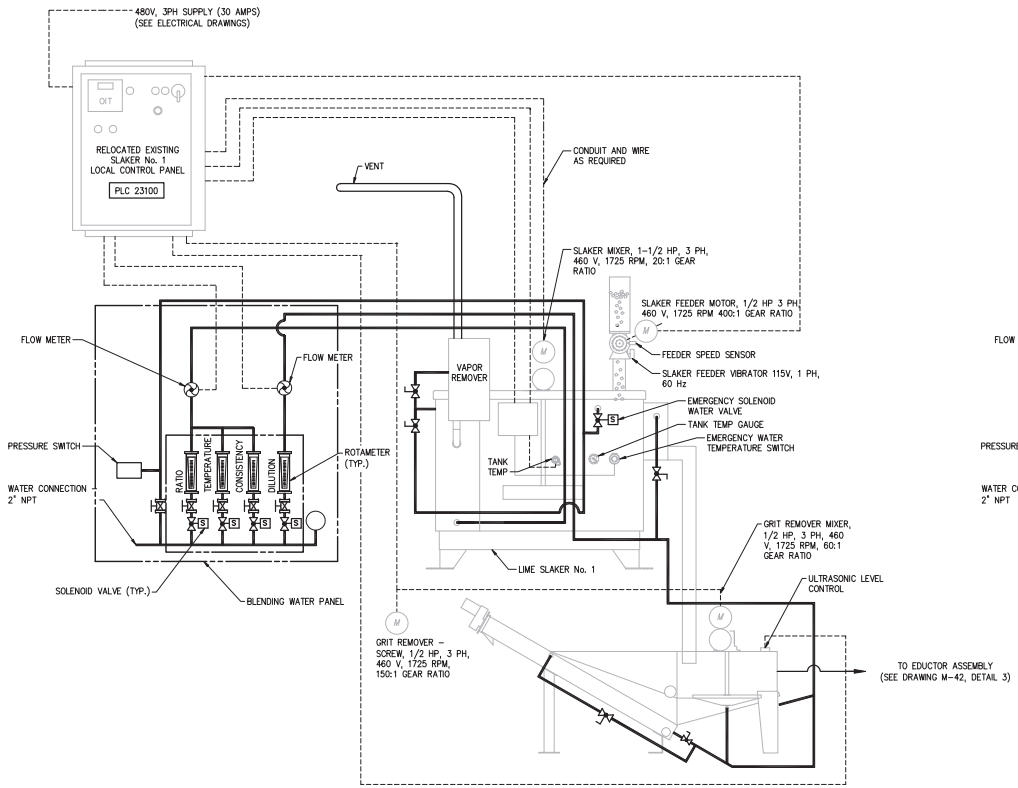

SLAKER SYSTEM No. 1 DIAGRAM

NTS

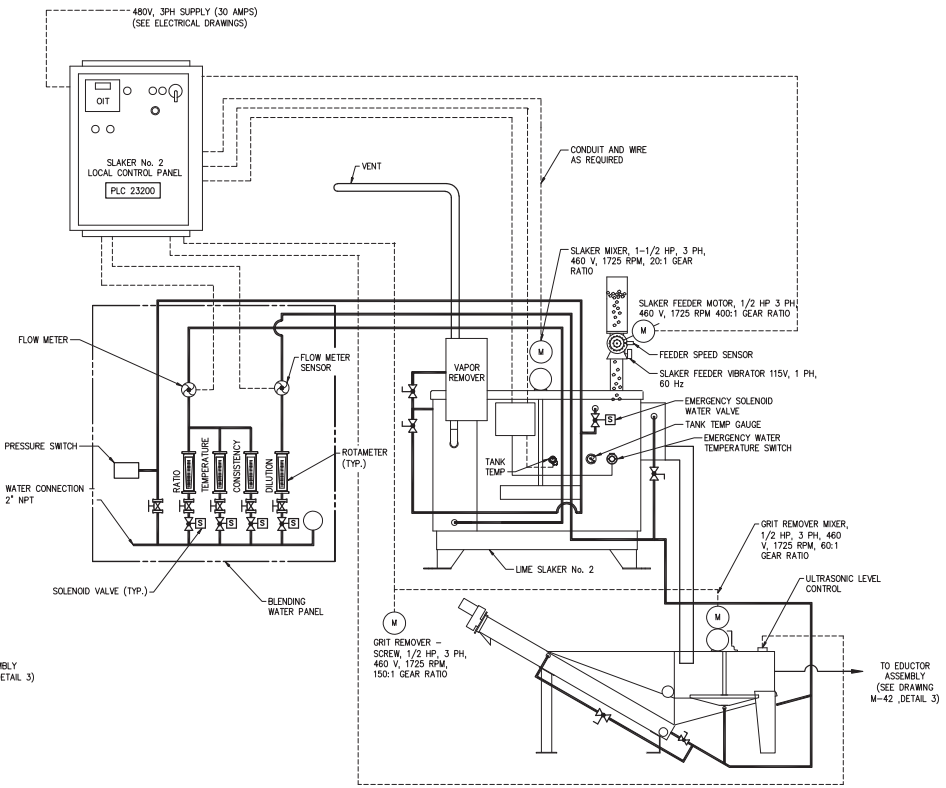

SLAKER SYSTEM No. 2 DIAGRAM

NTS

GENERAL NOTES:

1. THE SLAKER SYSTEM DIAGRAMS SHOWN ON THIS DRAWING ARE FOR CONCEPTUAL PURPOSES ONLY. THE CONTRACTOR AND SUPPLIER ARE RESPONSIBLE FOR DESIGNING, FURNISHING AND INSTALLING ANY NECESSARY COMPONENTS FOR A COMPLETE AND OPERABLE SYSTEM.

LEGEND:

EXISTING

PROPOSED

NO.	DATE	ISSUED FOR	BY

DESIGNED G.A.B.
DRAWN G.P.B.
CHECKED G.N.C.
PROJ. ENGR. G.A.B.

H. J. VIDAL P.E.
No. 37882

HAZEN AND SAWYER
Environmental Engineers & Scientists
4000 Hollywood Boulevard, Suite 750N
Hollywood, Florida 33021
Certificate of Authorization Number: 2771

SCALE NTS

CLIENTS PROJECT: –
ENGINEERS PROJECT: 44238-004
CAD REFERENCE: 44238-004BP3-M43

NORTH MIAMI FLORIDA
CITY OF NORTH MIAMI
PUBLIC WORKS UTILITIES

WINSON WATER TREATMENT PLANT
BID PACKAGE 3: WTP REHABILITATION
LIME SLAKER AND SILO MODIFICATIONS DIAGRAMS

DATE: JUNE 2014
SHEET: 104 OF 335
DRAWING: M-43

PERMITTING

PLOT DATE: 6/10/2014 5:49 PM BY: HS

XREFs= ..\Tblock\44238-004-BP3-TB,..\Base-BP3\M-BP3-LimeSilo-Plans-X,..\Base-BP3\M-BP3-LimeSilo-Plans-S,..\Base-BP3\M-BP3-LimeSlaker-Plan

File = H:\44238-004\Drawings\Bid Package 3 - WTP Rehab\Mech\44238-004BP3-M43 Saved by HScalf Save date = 6/9/2014 5:48 PM

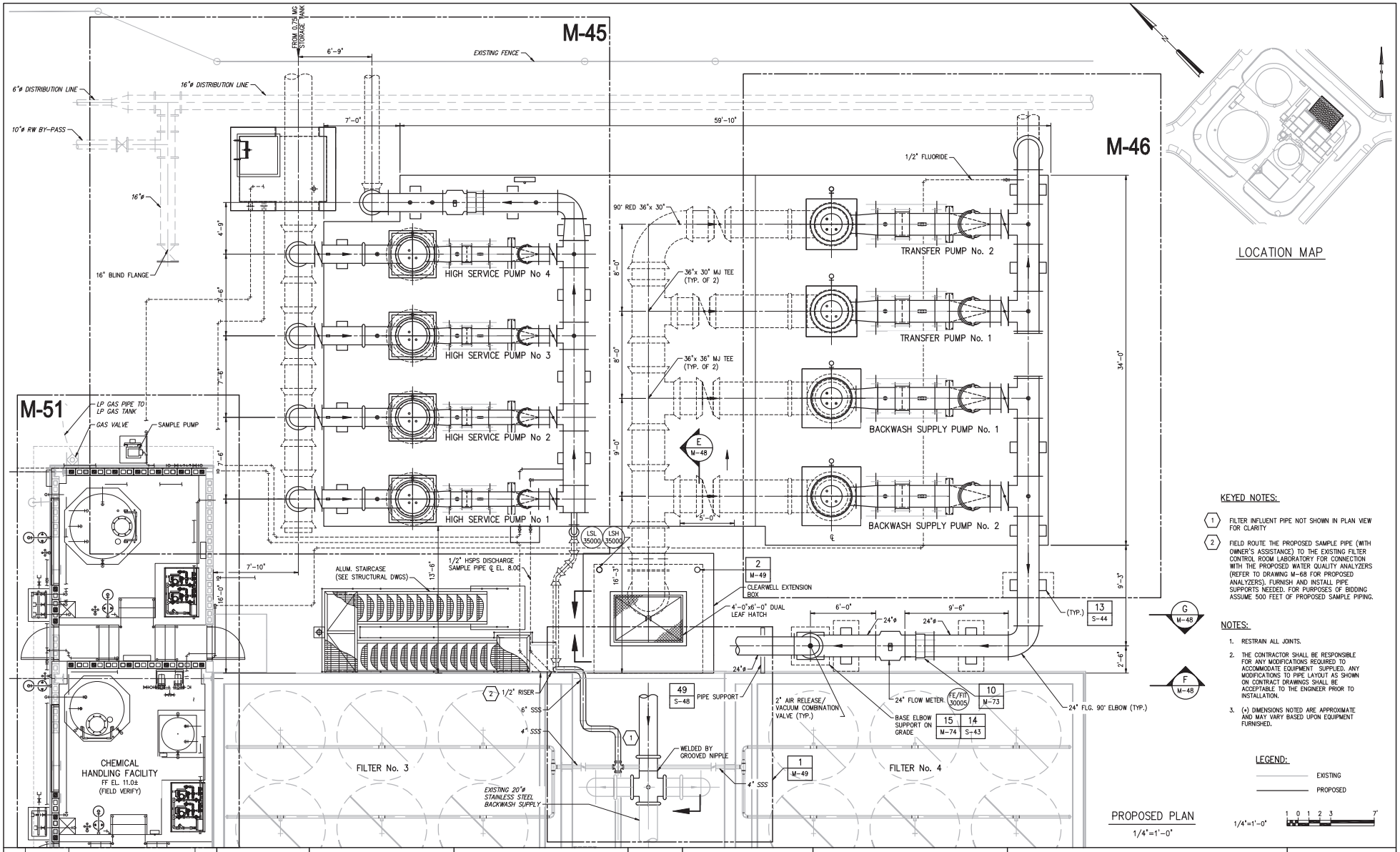

PROPOSED PLAN

1/4"=1'-0"

KEYED NOTES:

1. FILTER INFLUENT PIPE NOT SHOWN IN PLAN VIEW FOR CLARITY
2. FIELD ROUTE THE PROPOSED SAMPLE PIPE (WITH OWNER'S ASSISTANCE) TO THE EXISTING FILTER CONTROL ROOM LABORATORY FOR CONNECTION WITH THE PROPOSED WATER QUALITY ANALYZERS (REFER TO DRAWING M-68 FOR PROPOSED ANALYZERS). FURNISH AND INSTALL PIPE SUPPORTS NEEDED. FOR PURPOSES OF BIDDING ASSUME 500 FEET OF PROPOSED SAMPLE PIPING.

NOTES:

1. RESTRAIN ALL JOINTS.
2. THE CONTRACTOR SHALL BE RESPONSIBLE FOR ANY MODIFICATIONS REQUIRED TO ACCOMMODATE EQUIPMENT SUPPLIED. ANY MODIFICATIONS TO PIPE LAYOUT AS SHOWN ON CONTRACT DRAWINGS SHALL BE ACCEPTABLE TO THE ENGINEER PRIOR TO INSTALLATION.
3. (•) DIMENSIONS NOTED ARE APPROXIMATE AND MAY VARY BASED UPON EQUIPMENT FURNISHED.

LEGEND:

EXISTING

PROPOSED

1/4"=1'-0"

NO.	DATE	ISSUED FOR	BY
1	4/1/14	100% QA COMMENTS	H.J.V.

DESIGNED G.A.B.
DRAWN G.P.B.
CHECKED G.N.C.
PROJ. ENGR. G.A.B.

H. J. VIDAL P.E.
No. 37882

HAZEN AND SAWYER
Environmental Engineers & Scientists
4000 Hollywood Boulevard, Suite 750N
Hollywood, Florida 33021
Certificate of Authorization Number: 2771

SCALE 1/4"=1'-0"

CLIENTS PROJECT: –

ENGINEERS PROJECT: 44238-004

CAD REFERENCE: 44238-004BP3-M44

NORTH MIAMI FLORIDA
CITY OF NORTH MIAMI
PUBLIC WORKS UTILITIES

WINSON WATER TREATMENT PLANT

BID PACKAGE 3: WTP REHABILITATION

MASTER PUMP STATION
KEY PLAN

DATE: JUNE 2014
SHEET: 105 OF 335
DRAWING: M-44

PERMITTING

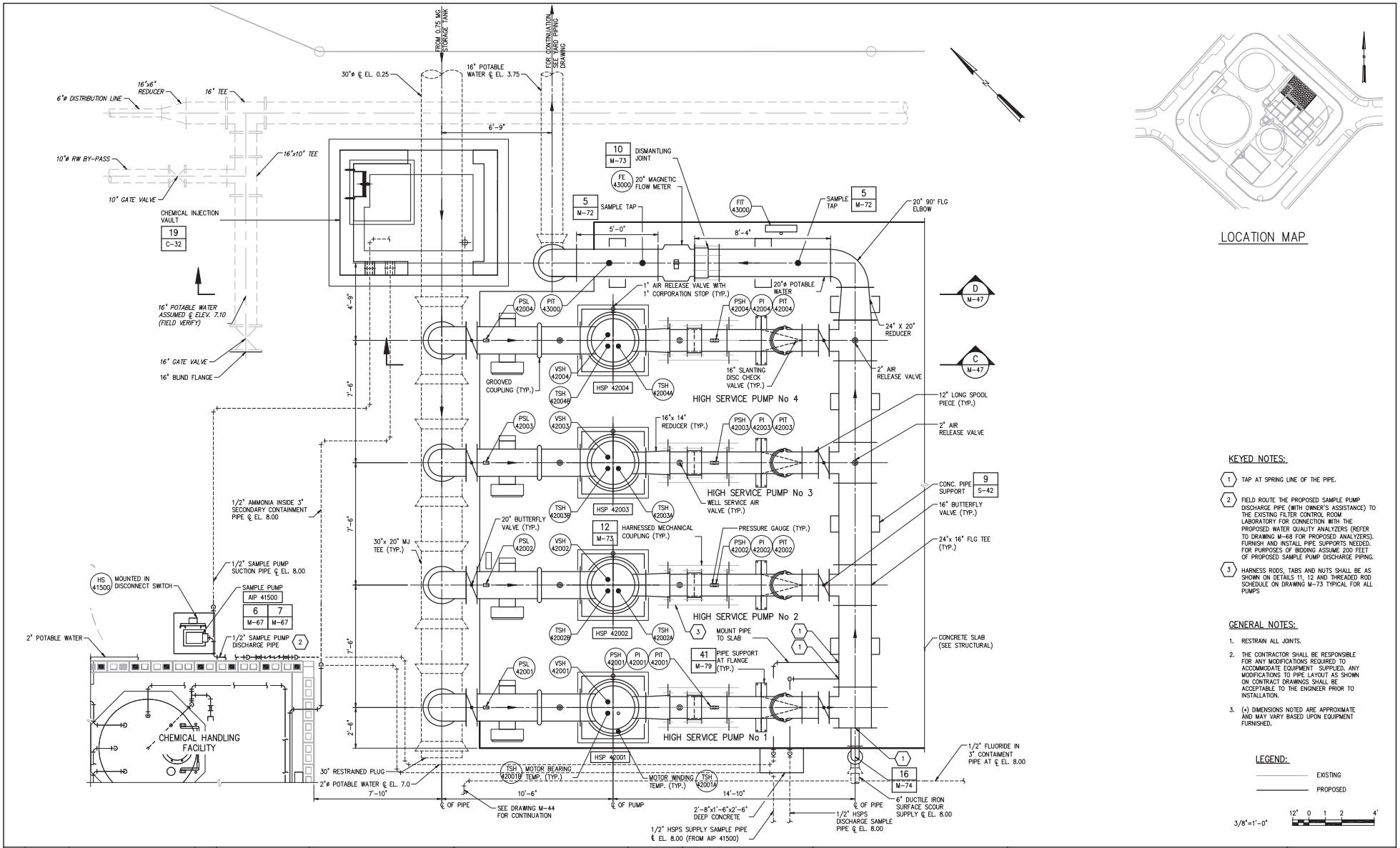

LOCATION MAP

KEYED NOTES:

1. TAP AT SPRING LINE OF THE PIPE.
2. FIELD ROUTE THE PROPOSED SAMPLE PUMP DISCHARGE PIPE (WITH OWNER'S ASSISTANCE) TO THE EXISTING FILTER CONTROL ROOM LABORATORY FOR CONNECTION WITH THE PROPOSED WATER QUALITY ANALYZERS (REFER TO DRAWING M-68 FOR PROPOSED ANALYZERS). FURNISH AND INSTALL PIPE SUPPORTS NEEDED. FOR PURPOSES OF BIDDING ASSUME 200 FEET OF PROPOSED SAMPLE PUMP DISCHARGE PIPING.
3. HARNESS RODS, TABS AND NUTS SHALL BE AS SHOWN ON DETAILS 11, 12 AND THREADED ROD SCHEDULE ON DRAWING M-73 TYPICAL FOR ALL PUMPS

GENERAL NOTES:

1. RESTRAIN ALL JOINTS.
2. THE CONTRACTOR SHALL BE RESPONSIBLE FOR ANY MODIFICATIONS REQUIRED TO ACCOMMODATE EQUIPMENT SUPPLIED. ANY MODIFICATIONS TO PIPE LAYOUT AS SHOWN ON CONTRACT DRAWINGS SHALL BE ACCEPTABLE TO THE ENGINEER PRIOR TO INSTALLATION.
3. (*) DIMENSIONS NOTED ARE APPROXIMATE AND MAY VARY BASED UPON EQUIPMENT FURNISHED.

LEGEND:

EXISTING

PROPOSED

3/8"=1'-0"

12" 0 1 2 4'

NO.	DATE	ISSUED FOR	BY
1	4/1/14	100% QA COMMENTS	H.J.V.

DESIGNED G.A.B.
DRAWN G.P.B.
CHECKED G.N.C.
PROJ. ENGR. G.A.B.

H. J. VIDAL P.E.
No. 37882

HAZEN AND SAWYER
Environmental Engineers & Scientists
4000 Hollywood Boulevard, Suite 750N
Hollywood, Florida 33021
Certificate of Authorization Number: 2771

SCALE 3/8"=1'-0"

CLIENTS PROJECT: –

ENGINEERS PROJECT: 44238-004

CAD REFERENCE: 44238-004BP3-M45

NORTH MIAMI FLORIDA
CITY OF NORTH MIAMI
PUBLIC WORKS UTILITIES

WINSON WATER TREATMENT PLANT

BID PACKAGE 3: WTP REHABILITATION

HIGH SERVICE PUMPS PLAN

DATE: JUNE 2014
SHEET: 106 OF 335
DRAWING: M-45

PERMITTING

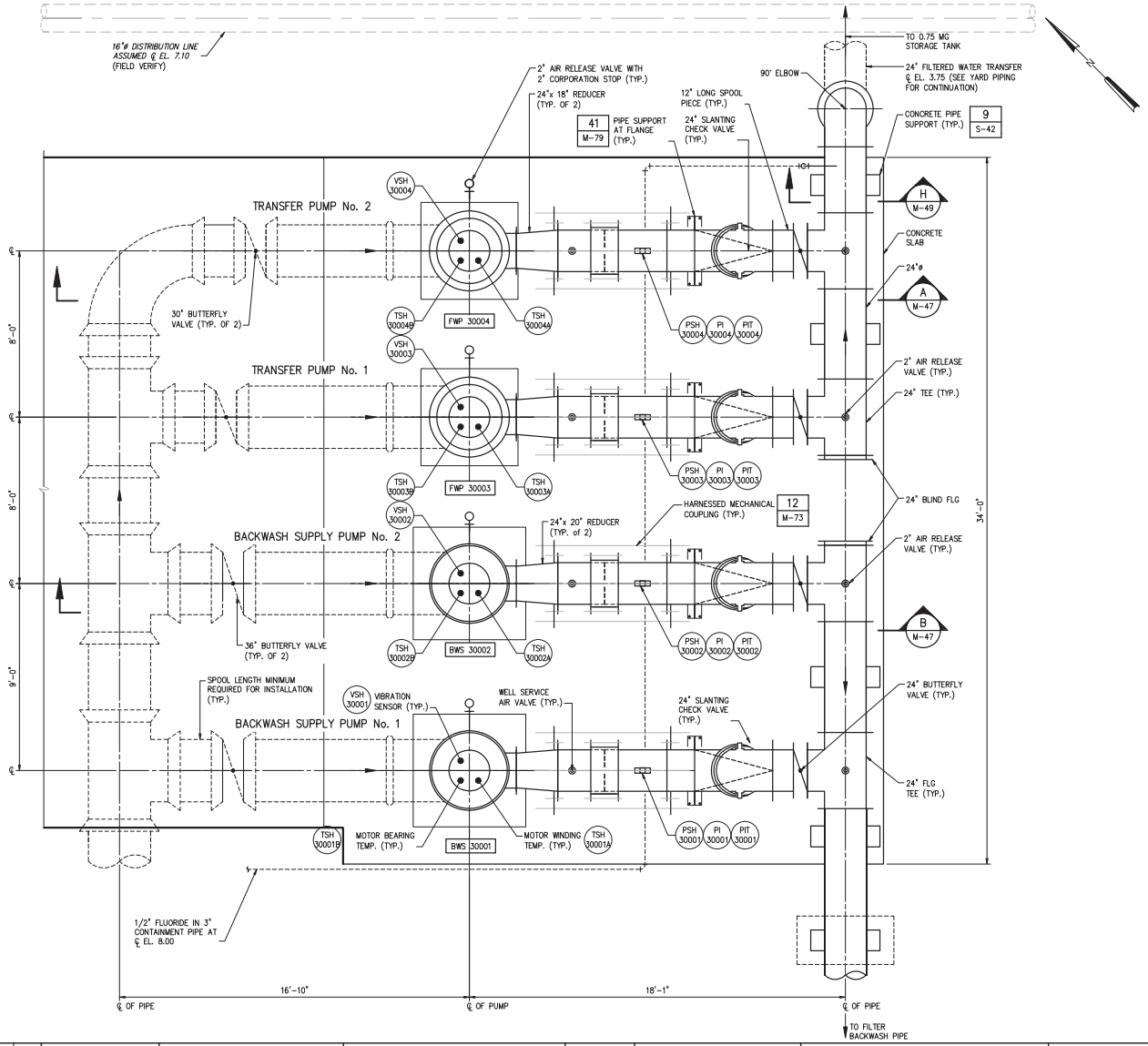

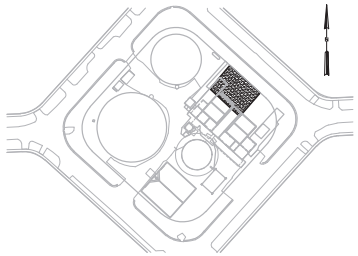

LOCATION MAP

NOTES:

1. RESTRAIN ALL JOINTS.
2. THE CONTRACTOR SHALL BE RESPONSIBLE FOR ANY MODIFICATIONS REQUIRED TO ACCOMMODATE EQUIPMENT SUPPLIED. ANY MODIFICATIONS TO PIPE LAYOUT AS SHOWN ON CONTRACT DRAWINGS SHALL BE ACCEPTABLE TO BY THE ENGINEER PRIOR TO INSTALLATION.
3. (*) DIMENSIONS NOTED ARE APPROXIMATE AND MAY VARY BASED UPON EQUIPMENT FURNISHED.

LEGEND:

EXISTING

PROPOSED

3/8"=1'-0"

12" 0 1 2 4'

NO.	DATE	ISSUED FOR	BY

DESIGNED G.A.B.
DRAWN G.P.B.
CHECKED G.N.C.
PROJ. ENGR. G.A.B.

H. J. VIDAL P.E.
No. 37882

HAZEN AND SAWYER
Environmental Engineers & Scientists
4000 Hollywood Boulevard, Suite 750N
Hollywood, Florida 33021
Certificate of Authorization Number: 2771

SCALE 3/8"=1'-0"

CLIENTS PROJECT: –
ENGINEERS PROJECT: 44238-004
CAD REFERENCE: 44238-004BP3-M46

NORTH MIAMI FLORIDA
CITY OF NORTH MIAMI
PUBLIC WORKS UTILITIES

WINSON WATER TREATMENT PLANT
BID PACKAGE 3: WTP REHABILITATION

BACKWASH AND TRANSFER PUMPS PLAN

DATE: JUNE 2014
SHEET: 107 OF 335
DRAWING: M-46

PERMITTING

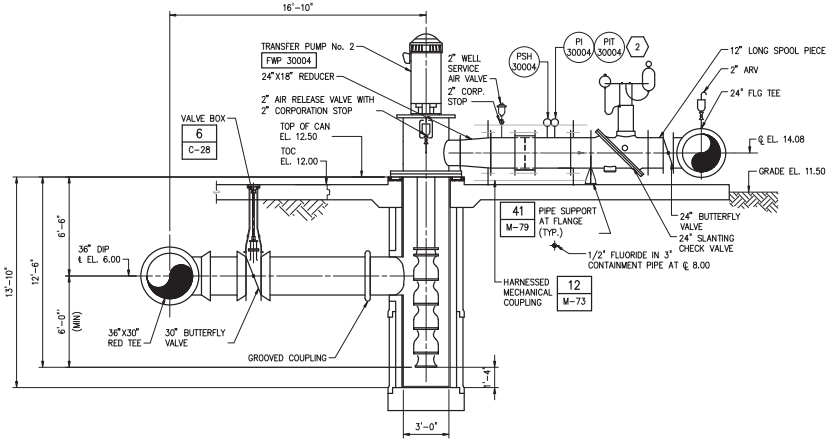

TRANSFER PUMPS

SECTION A / M-46
1/4" = 1'-0"

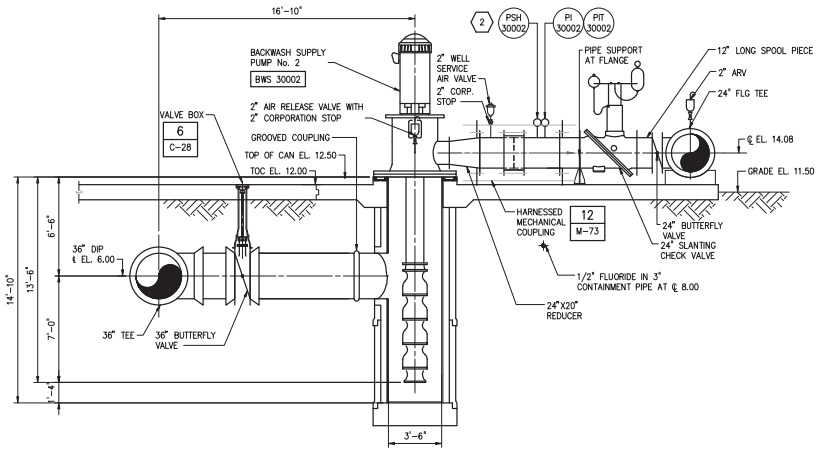

BACKWASH PUMPS

SECTION B / M-46
1/4" = 1'-0"

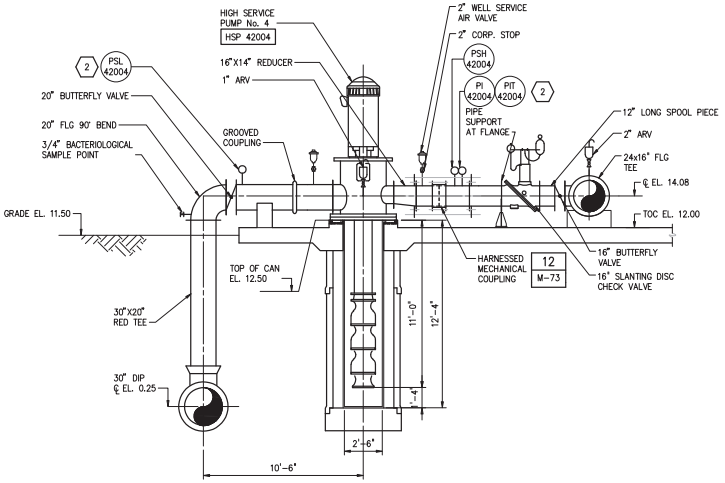

HIGH SERVICE PUMP

SECTION C / M-45
1/4" = 1'-0"

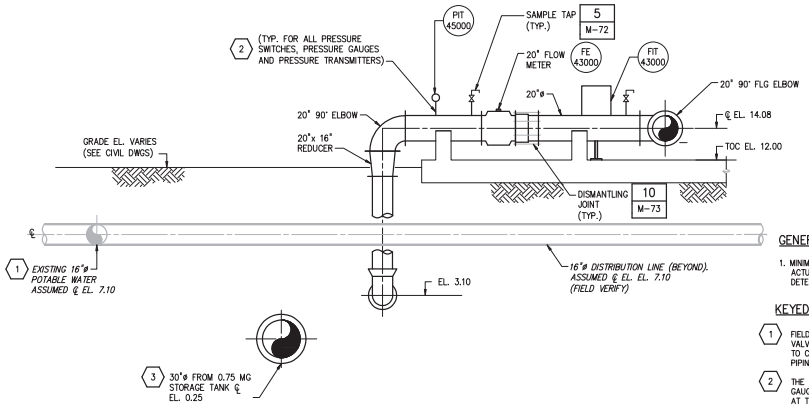

SECTION D / M-45
1/4" = 1'-0"

GENERAL NOTES:

1. MINIMUM PUMP CAN DIMENSIONS SHOWN. THE ACTUAL PUMP AND CAN DIMENSIONS SHALL BE DETERMINED BY THE PUMP MANUFACTURER.

KEYED NOTES:

1. FIELD VERIFY LOCATION AND ELEVATION OF GATE VALVE AND PIPE AND REVIEW WITH OWNER PRIOR TO COMMENCING THE DEMOLITION OF EXISTING PIPING SHOWN ON DRAWING C-02.
2. THE TAP FOR ALL PRESSURE SWITCHES, PRESSURE GAUGES AND PRESSURE TRANSMITTERS SHALL BE AT THE SPRINGLINE OF THE PROCESS PIPE.
3. CHEMICAL INJECTION VAULT NOT SHOWN FOR CLARITY.

LEGEND:

EXISTING
PROPOSED

1/4"=1'-0" 1 0 1 2 3 7'

PLOT DATE: 6/10/2014 4:15 PM BY: HS

NO.	DATE	ISSUED FOR	BY

DESIGNED G.A.B.
DRAWN O.L.C.
CHECKED G.N.C.
PROJ. ENGR. G.A.B.

H. J. VIDAL P.E.
No. 37882

HAZEN AND SAWYER
Environmental Engineers & Scientists
4000 Hollywood Boulevard, Suite 750N
Hollywood, Florida 33021
Certificate of Authorization Number: 2771

SCALE 1/4"=1'-0"

CLIENTS PROJECT: –
ENGINEERS PROJECT: 44238-004
CAD REFERENCE: 44238-004BP3-M47

NORTH MIAMI FLORIDA
CITY OF NORTH MIAMI
PUBLIC WORKS UTILITIES

WINSON WATER TREATMENT PLANT
BID PACKAGE 3: WTP REHABILITATION
MASTER PUMP STATION SECTIONS AND DETAILS

DATE: JUNE 2014
SHEET: 108 OF 335
DRAWING: M-47

PERMITTING

XREFs= ..\Tblock\44238-004-BP3-TB,..\Base-BP3\S-BP3-HSPS-SECT,..\Base-BP3\M-BP3-HSPS-SECT,..\Base-BP3\MN-BP3-HSPS-PLAN (Alt 2),..\Base-BP3\E-BP3-HSPS-Plan,..\Base-BP3\S-BP3-HSPS-PLAN,..\Base-BP3\S-BP3-ChemInjPoint-Plan

File = H:\44238-004\Drawings\Bid Package 3 - WTP Rehab\Mech\44238-004BP3-M47 Saved by HScalf Save date = 6/9/2014 5:08 PM

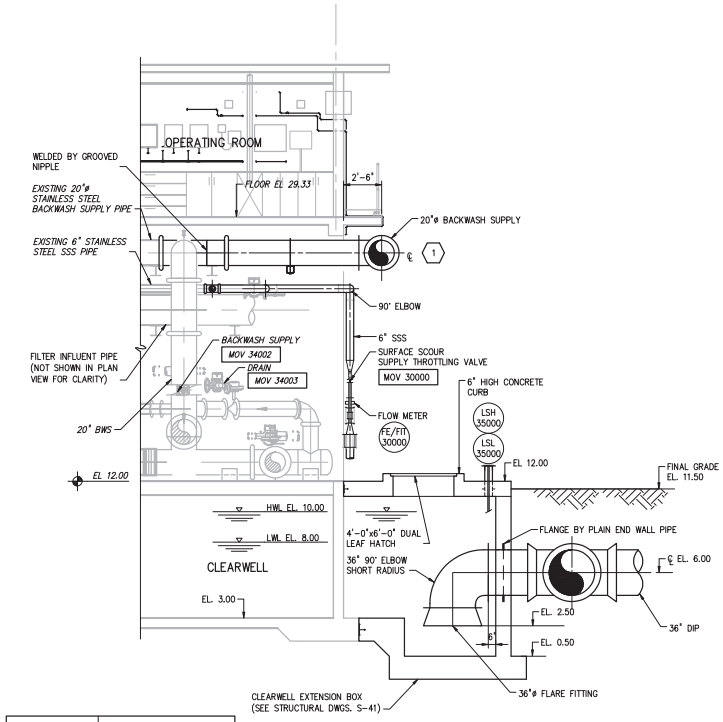

INSTRUMENT ID No.	ACTIVATE SWITCH AT ELEVATION
LSL 35000	7.50
LSH 35000	10.25

SECTION E / M-44
1/4" = 1'-0"

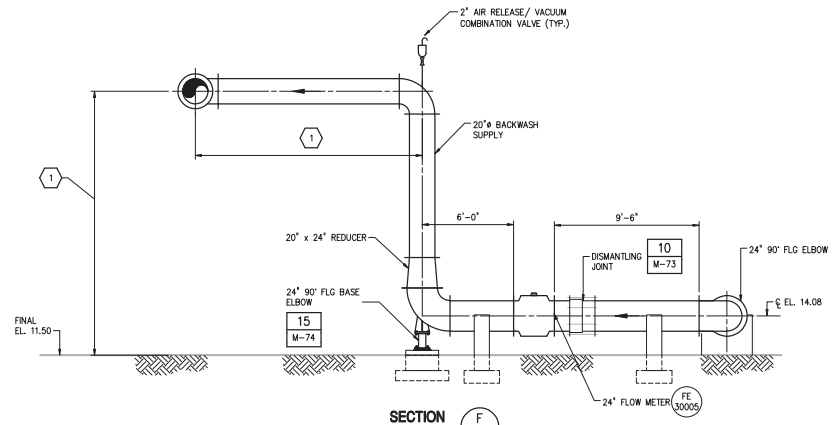

SECTION F / M-44
1/4" = 1'-0"

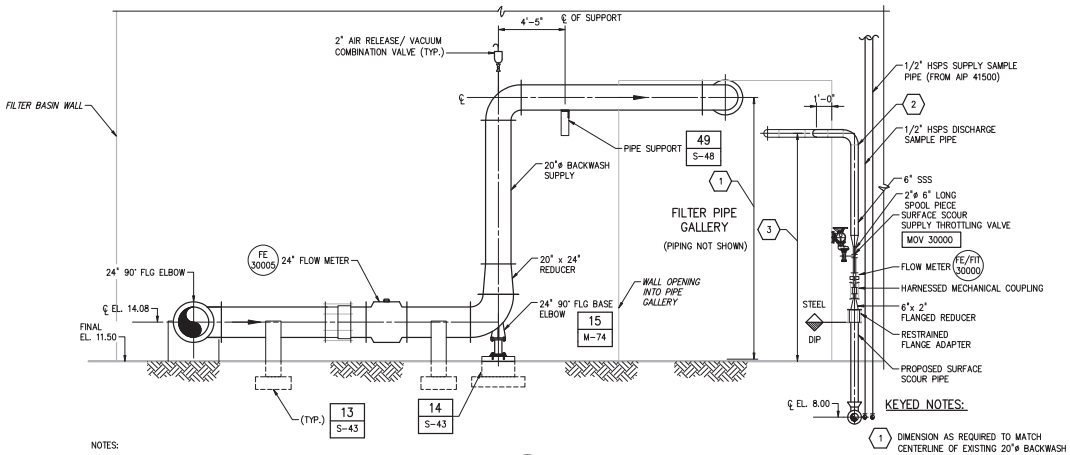

SECTION G / M-44
1/4" = 1'-0"

NOTES:

1. COUPLINGS SHALL BE HARNESSED AND BACK BOLTED TO PREVENT MOVEMENT IN EITHER DIRECTION. BACKING NUTS SHALL BE 316 STAINLESS STEEL.
2. FURNISH AND INSTALL (2) HARNESSING RODS. RODS SHALL BE 3/4-INCH DIAMETER. THREADED RODS SHALL BE 316 STAINLESS STEEL.
3. THREADED RODS SHALL BE BOLTED TO 1-INCH THICK STAINLESS STEEL TABS.

KEYED NOTES:

1. DIMENSION AS REQUIRED TO MATCH CENTERLINE OF EXISTING 20"ø BACKWASH SUPPLY PIPE IN THE FILTER GALLERY
2. FIELD ROUTE THE PROPOSED SAMPLE PUMP DISCHARGE PIPE (WITH OWNER'S ASSISTANCE) TO THE EXISTING FILTER CONTROL ROOM LABORATORY FOR CONNECTION WITH THE PROPOSED WATER QUALITY ANALYZERS (REFER TO DRAWING M-68 FOR PROPOSED ANALYZERS). FURNISH AND INSTALL PIPE SUPPORTS NEEDED. FOR PURPOSES OF BIDDING ASSUME 200 FEET OF PROPOSED SAMPLE PUMP DISCHARGE PIPING.
3. DIMENSION AS REQUIRED TO MATCH CENTERLINE OF EXISTING 6" SURFACE SCOUR SUPPLY (SSS) PIPE IN THE FILTER GALLERY.

LEGEND:

EXISTING
PROPOSED

1/4"=1'-0"

NO.	DATE	ISSUED FOR	BY

DESIGNED G.A.B.
DRAWN O.L.C.
CHECKED G.N.C.
PROJ. ENGR. G.A.B.

H. J. VIDAL P.E.
No. 37882

HAZEN AND SAWYER
Environmental Engineers & Scientists
4000 Hollywood Boulevard, Suite 750N
Hollywood, Florida 33021
Certificate of Authorization Number: 2771

SCALE 1/4"=1'-0"

CLIENTS PROJECT: –
ENGINEERS PROJECT: 44238-004
CAD REFERENCE: 44238-004BP3-M48

NORTH MIAMI FLORIDA
CITY OF NORTH MIAMI
PUBLIC WORKS UTILITIES

WINSON WATER TREATMENT PLANT
BID PACKAGE 3: WTP REHABILITATION
MASTER PUMP STATION SECTIONS

DATE: JUNE 2014
SHEET: 109 OF 335
DRAWING: M-48

PERMITTING

PLOT DATE: 6/10/2014 4:21 PM BY: HS

XREFs= ..\Tblock\44238-004-BP3-TB,..\Base-BP3\M-BP1-Filters-Sections,..\Base-BP3\S-BP1-Filters-Sections-X,..\Base-BP3\S-BP3-Filters-Sections,..\Base-BP3\M-BP3-HSPS-SECT,..\Base-BP3\S-BP3-HSPS-PLAN

File = H:\44238-004\Drawings\Bid Package 3 - WTP Rehab\Mech\44238-004BP3-M48 Saved by HsCad2 Save date = 6/9/2014 6:50 PM

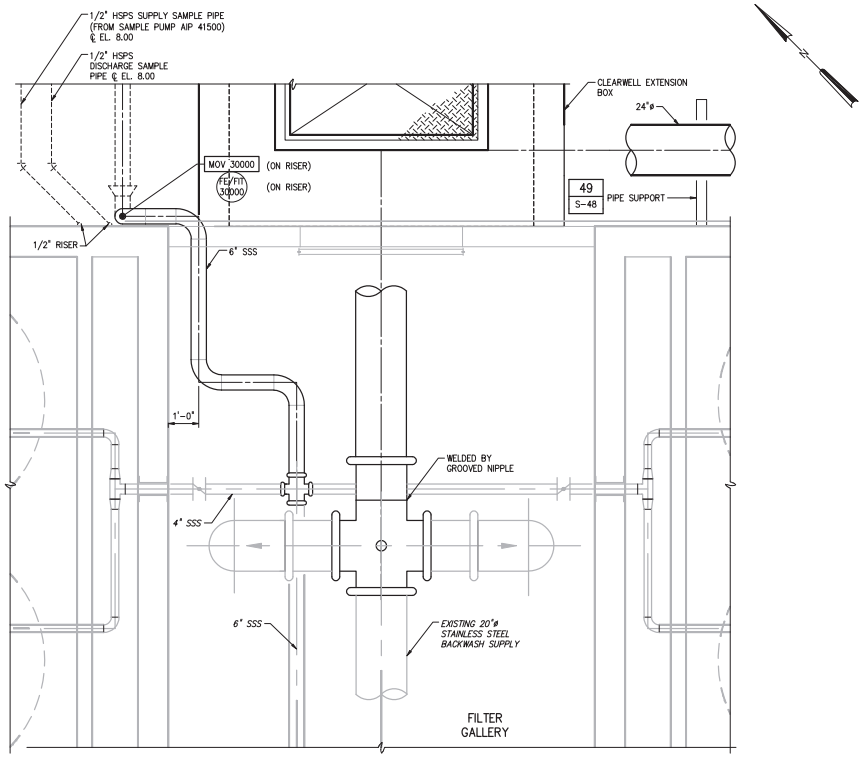

DETAIL 1 / M-44
1/2" = 1'-0"

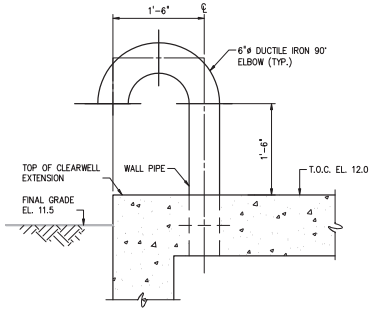

DETAIL 2 / M-44
1" = 1'-0"

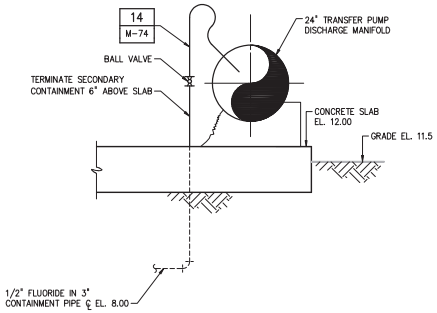

SECTION H / M-46
1/2" = 1'-0"

1"=1'-0" 12" 6 0 1'
1/2"=1'-0" 12" 0 1 3'

NO.	DATE	ISSUED FOR	BY

DESIGNED G.A.B.
DRAWN G.P.B.
CHECKED G.N.C.
PROJ. ENGR. G.A.B.

H. J. VIDAL P.E.
No. 37882

HAZEN AND SAWYER
Environmental Engineers & Scientists
4000 Hollywood Boulevard, Suite 750N
Hollywood, Florida 33021
Certificate of Authorization Number: 2771

SCALE: AS NOTED

CLIENTS PROJECT: –
ENGINEERS PROJECT: 44238-004
CAD REFERENCE: 44238-004BP3-M49

NORTH MIAMI FLORIDA
CITY OF NORTH MIAMI
PUBLIC WORKS UTILITIES

WINSON WATER TREATMENT PLANT
BID PACKAGE 3: WTP REHABILITATION
MASTER PUMP STATION
SECTIONS AND DETAILS

DATE: JUNE 2014
SHEET: 110 OF 335
DRAWING: M-49

PERMITTING

PLOT DATE: 6/10/2014 4:27 PM BY: HS

XREFs= ..\Titleck\44238-004-BP3-TB,..\Base-BP3\MN-BP3-HSPS-PLAN (Alt 2),..\Base-BP3\M-BP1-Filters-Plan-Upper,..\Base-BP3\S-BP3-HSPS-PLAN,..\Base-BP3\S-BP1-Filters-Plan-Bottom-X,..\Base-BP3\S-BP3-ChemInjPoint-Plan

File = H:\44238-004\Drawings\Bid Package 3 - WTP Rehab\Mech\44238-004BP3-M49 Saved by HsCad2 Save date = 6/9/2014 9:03 PM

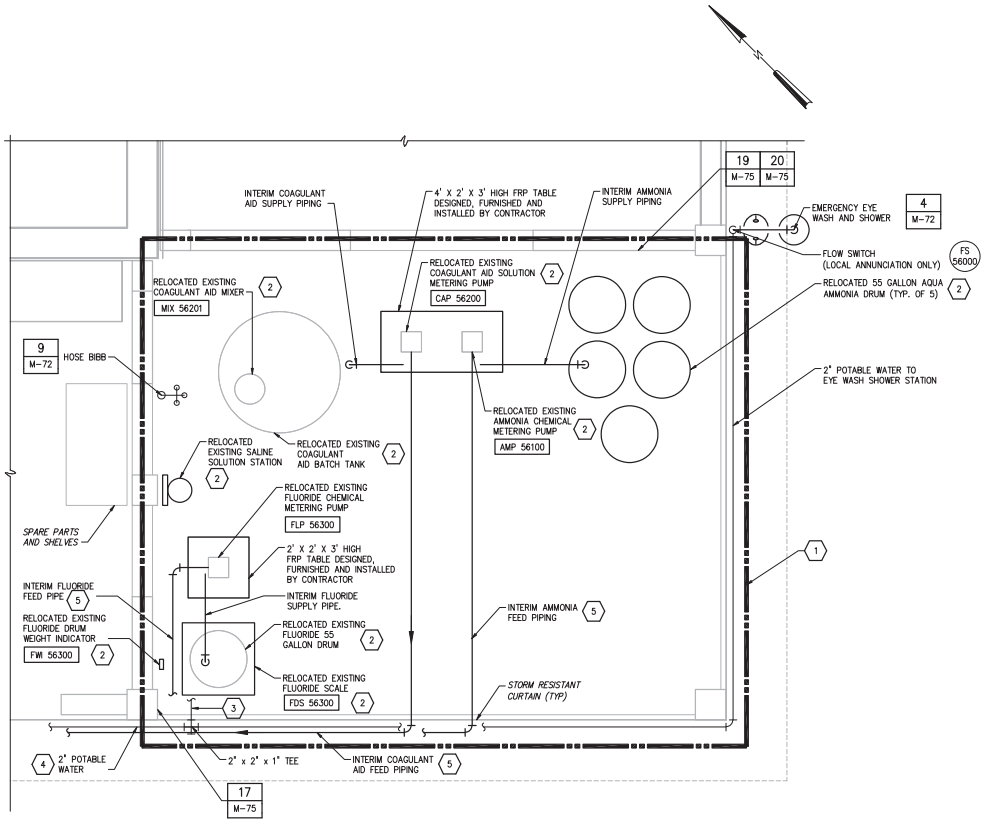

PROPOSED PLAN
1/2" = 1'-0"

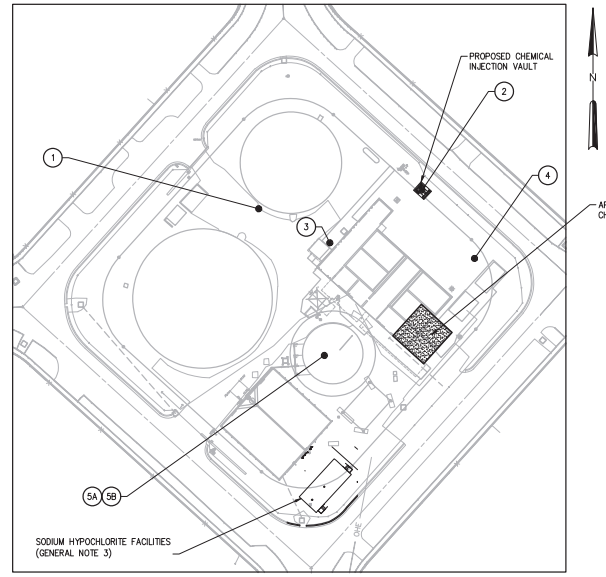

CHEMICAL INJECTION POINT LOCATION MAP
NTS

EXISTING AND PROPOSED CHEMICAL INJECTION POINT SCHEDULE		
MARK	CHEMICAL	DESCRIPTION
1	AQUA AMMONIA	EXISTING AMMONIA INJECTION POINT AT THE ABOVE GROUND OUTLET OF THE 750,000 GALLON WATER STORAGE TANK
2	AQUA AMMONIA	PROPOSED AMMONIA INJECTION POINT ON THE PROPOSED HIGH SERVICE PUMP SUPPLY PIPE
3	FLUORIDE	EXISTING FLUORIDE INJECTION POINT ON THE DISCHARGE OF TRANSFER PUMP NO.2
4	FLUORIDE	PROPOSED FLUORIDE INJECTION POINT ON THE PROPOSED TRANSFER PUMP DISCHARGE
5A	COAGULANT	EXISTING COAGULANT AID INJECTION POINT ON TOP OF LIME CONTACTOR
5B	COAGULANT	PROPOSED COAGULANT AID INJECTION POINT ON TOP OF THE REFURBISHED LIME CONTACTOR

GENERAL NOTES:

1. REFERENCE THE SPECIFICATION ENTITLED "INTERIM CHEMICAL FEED FACILITY" FOR ADDITIONAL REQUIREMENTS.
2. MAINTAIN FEED OF CHEMICALS VIA THE INTERIM SYSTEM TO THE LOCATIONS SHOWN ON THE "LOCATION MAP" ON THIS SHEET AND SCHEDULED IN THE "EXISTING AND PROPOSED CHEMICAL INJECTION LOCATION SCHEDULE" ON THIS SHEET UNTIL THE USE OF INTERIM CHEMICAL FEED SYSTEM CAN BE DISCONTINUED IN ACCORDANCE WITH THE SEQUENCE OF CONSTRUCTION IN THE SECTIONS ENTITLED "SUMMARY OF WORK" AND "INTERIM CHEMICAL FEED FACILITY"
3. THE PROPOSED SODIUM HYPOCHLORITE FACILITIES MUST BE IN-SERVICE PRIOR TO REMOVAL OF THE EXISTING SODIUM HYPOCHLORITE STORAGE AND FEED SYSTEM AND INSTALLATION ON THE INTERIM CHEMICAL STORAGE AND FEED SYSTEMS.
4. USE OF ALL FEED POINTS REQUIRES THAT CONTRACTOR COMPLY WITH SEQUENCING FROM THE SECTION 01010.

KEYED NOTES:

1. AFTER DEMOLITION OF THE EXISTING HYPOCHLORITE SYSTEM, THIS AREA SHALL BE USED FOR THE INTERIM CHEMICAL FEED SYSTEMS AS SPECIFIED IN THE SECTION ENTITLED "INTERIM CHEMICAL FEED FACILITY" AND AS SHOWN ON THIS DRAWING.
2. RELOCATE EXISTING CHEMICAL STORAGE DRUMS, TANKS, PUMPS AND ACCESSORIES FROM THEIR CURRENT LOCATION TO THIS PROPOSED LOCATION PER THE REQUIREMENTS IN THE SECTION ENTITLED "INTERIM CHEMICAL FEED FACILITY".
3. FIELD ROUTE 1" POTABLE WATER TO CONNECTION WITH HOSE BIBB.
4. FIELD ROUTE THE PROPOSED POTABLE WATER PIPE (WITH OWNER'S ASSISTANCE) TO A CONNECTION WITH A EXISTING POTABLE WATER PIPE SELECTED BY THE OWNER IN THE FIELD. FURNISH AND INSTALL PIPE SUPPORTS NEEDED. FOR PURPOSES OF BIDDING ASSUME 200 FEET OF PROPOSED POTABLE WATER PIPING.
5. PER SPECIFICATION ENTITLED "INTERIM CHEMICAL FEED FACILITY", FURNISH AND INSTALL ALL CHEMICAL TUBING, PIPING, SUPPORTS, AND TIE-INS AS REQUIRED TO MAINTAIN CHEMICAL FEED FROM INTERIM CHEMICAL FACILITY TO THE CHEMICAL INJECTION POINTS.

LEGEND:

PHOTO # – ARROW INDICATES DIRECTION AND POINT OF VIEW OF PHOTO

EXISTING

PROPOSED

TO BE REMOVED

1/2"=1'-0" 12" 0 1 3'

NO.	DATE	ISSUED FOR	BY
1	4/1/14	100% QA COMMENTS	H.J.V.

DESIGNED G.A.B.
DRAWN L.M.S.
CHECKED G.N.C.
PROJ. ENGR. G.A.B.

H. J. VIDAL P.E.
No. 37882

HAZEN AND SAWYER
Environmental Engineers & Scientists
4000 Hollywood Boulevard, Suite 750N
Hollywood, Florida 33021
Certificate of Authorization Number: 2771

SCALE: AS NOTED

CLIENTS PROJECT: –
ENGINEERS PROJECT: 44238-004
CAD REFERENCE: 44238-004BP3-M50

NORTH MIAMI FLORIDA
CITY OF NORTH MIAMI
PUBLIC WORKS UTILITIES

WINSON WATER TREATMENT PLANT
BID PACKAGE 3: WTP REHABILITATION
INTERIM CHEMICAL STORAGE AND FEED SYSTEMS

DATE: JUNE 2014
SHEET: 111 OF 335
DRAWING: M-50

PERMITTING

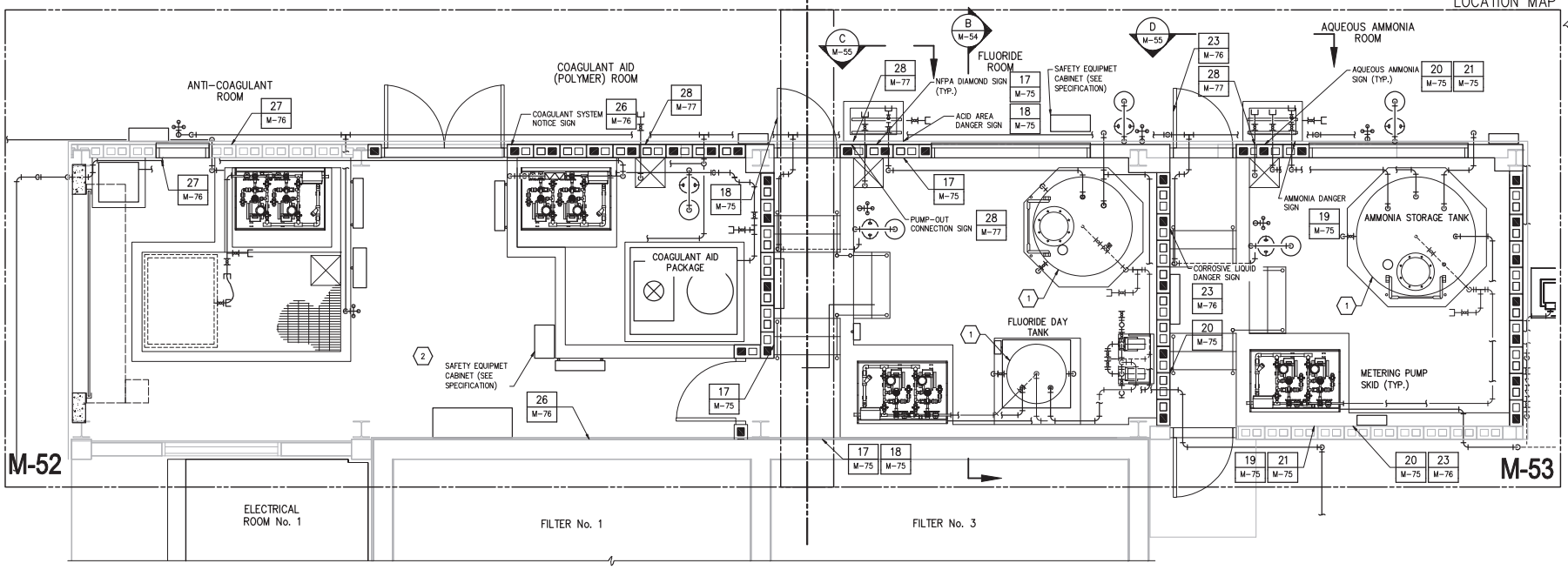

CHEMICAL HANDLING FACILITY
PROPOSED PLAN
3/8"=1'-0"

KEYED NOTES:

1. A MINIMUM OF 4 NFPA 704 DIAMOND DECALS SHALL BE FURNISHED AND INSTALLED FOR EACH CHEMICAL TANK.
2. SUPPLY ALL ADDITIONAL SAFETY SIGNS REQUIRED BY PERMITTING AGENCIES AT NO ADDITIONAL COST TO THE OWNER.

LEGEND:

EXISTING
PROPOSED

3/8"=1'-0"

NO.	DATE	ISSUED FOR	BY

DESIGNED G.A.B.
DRAWN G.P.B.
CHECKED G.N.C.
PROJ. ENGR. G.A.B.

H. J. VIDAL P.E.
No. 37882

HAZEN AND SAWYER
Environmental Engineers & Scientists
4000 Hollywood Boulevard, Suite 750N
Hollywood, Florida 33021
Certificate of Authorization Number: 2771

SCALE 3/8"=1'-0"

CLIENTS PROJECT: –
ENGINEERS PROJECT: 44238-004
CAD REFERENCE: 44238-004BP3-M51

CITY OF NORTH MIAMI
PUBLIC WORKS UTILITIES

WINSON WATER TREATMENT PLANT
BID PACKAGE 3: WTP REHABILITATION
CHEMICAL HANDLING FACILITY
KEY PLAN AND SIGNAGE

DATE: JUNE 2014
SHEET: 112 OF 335
DRAWING: M-51

PERMITTING

PLOT DATE: 6/10/2014 4:34 PM BY: HS

XREFs= ..\Tblock\44238-004-BP3-TB,..\Base-BP3\S-BP3-ChemHand-Plan,..\Base-BP3\S-BP1-Filters-Plan-Bottom-X,..\Base-BP3\M-BP3-ChemHand-Plan

File = H:\44238-004\Drawings\Bid Package 3 - WTP Rehab\Mech\44238-004BP3-M51 Saved by HScaff Save date = 6/9/2014 4:58 PM