NORTH MIAMI
FLORIDA
776 N.E. 125 Street, North Miami, Florida 33161

Council Report

To: The Honorable Mayor and City Council

From: Lucia M. Gonzalez, Library Director

Date: July 8, 2014

RE:

A RESOLUTION OF THE VICE MAYOR ACTING AS MAYOR AND CITY COUNCIL OF THE CITY OF NORTH MIAMI, FLORIDA, APPROVING THE CITY ADMINISTRATION'S RANKING AND SELECTION OF SA CONSULTANTS, LLC, AS THE LOWEST RESPONSIVE-RESPONSIBLE CONTRACTOR TO PROVIDE ALL MATERIALS, LABOR, EQUIPMENT, TOOLS, SUPERVISION, AND RELATED SERVICES NECESSARY FOR THE INTERIOR RENOVATION AND REMODELING OF THE CITY OF NORTH MIAMI PUBLIC LIBRARY, IN ACCORDANCE WITH THE TERMS, CONDITIONS, AND SPECIFICATIONS CONTAINED IN THE INVITATION FOR BID NO. 36-13-14 RENOVATION AND REMODELING OF CITY PUBLIC LIBRARY PROJECT; AND FURTHER AUTHORIZING THE CITY MANAGER AND CITY ATTORNEY TO NEGOTIATE AND EXECUTE AN AGREEMENT TO COMPLETE THE RENOVATION PROJECT, AT A COST NOT TO EXCEED SEVEN HUNDRED THIRTY THOUSAND DOLLARS ($730,000.00); PROVIDING FOR AN EFFECTIVE DATE AND FOR ALL OTHER PURPOSES.

RECOMMENDATION

Staff is requesting that the Vice Mayor acting as Mayour and City Council hereby authorize the City Manager and City Attorney to negotiate and execute an agreement between the City of North Miami and SA Consultants, LLC. to complete the renovation and remodeling of the City Public Library ("Project"), at a cost not to exceed Seven Hundred Thirty Thousand Dollars ($730,000.000).

NORTH MIAMI
FLORIDA
776 N.E. 125 Street, North Miami, Florida 33161

Council Report

BACKGROUND

As part of Progress 2013 the Library was allocated ($1,000,000.000) from Biscayne Landing Funds to conduct renovations recommended from the 40 Year Recertification Report and much needed renovation of the interior space. The project will also add much needed meeting rooms and seating, plus create new areas such as a Teen section and coffee shop. The project also includes new flooring and carpets, additional public restrooms, and energy efficient (library specific) lighting.

On June 10, 2014, the City advertised Invitation for Bid No. 36-13-14 for the renovation and remodeling of City Public Library to obtain a Contractor to provide the materials, labor, equipment, tools, supervision, and related services necessary for the interior and exterior renovation of the Library, in accordance with the terms, conditions, and specifications contained in the Solicitation opened on Tuesday, July 1st, 2014 and the following responses were received:

Respondents	Proposal
SA Consultants, LLC. *(Local Preference)*	$ 730,000.00
MVP Contractor, Inc.	$ 796,716.00
E.L.C.I Construction Group, Inc. *(Local Preference)*	$ 820,450.00
Grace & Naeem Uddin, Inc. *(Local Preference)*	$ 870,761.89

FUNDING SOURCE:

Funding for this purchase is through the City's General Funds which has allocated one million from the Biscayne Landing funds for the City's Library renovations.

ATTACHMENTS

Resolution
Bid Tabulation
Proposal

RESOLUTION NO. _____

A RESOLUTION OF THE VICE MAYOR ACTING AS MAYOR AND CITY COUNCIL OF THE CITY OF NORTH MIAMI, FLORIDA, APPROVING THE CITY ADMINISTRATION'S RANKING AND SELECTION OF SA CONSULTANTS, LLC, AS THE LOWEST RESPONSIVE-RESPONSIBLE CONTRACTOR TO PROVIDE ALL MATERIALS, LABOR, EQUIPMENT, TOOLS, SUPERVISION, AND RELATED SERVICES NECESSARY FOR THE INTERIOR RENOVATION AND REMODELING OF THE CITY OF NORTH MIAMI PUBLIC LIBRARY, IN ACCORDANCE WITH THE TERMS, CONDITIONS, AND SPECIFICATIONS CONTAINED IN THE INVITATION FOR BID NO. 36-13-14 RENOVATION AND REMODELING OF CITY PUBLIC LIBRARY PROJECT; AND FURTHER AUTHORIZING THE CITY MANAGER AND CITY ATTORNEY TO NEGOTIATE AND EXECUTE AN AGREEMENT TO COMPLETE THE RENOVATION PROJECT, AT A COST NOT TO EXCEED SEVEN HUNDRED THIRTY THOUSAND DOLLARS ($730,000.00); PROVIDING FOR AN EFFECTIVE DATE AND FOR ALL OTHER PURPOSES.

WHEREAS, the City of North Miami ("City") Public Library ("Library") is in dire need of renovation and remodeling, to continue to provide exemplary services to all Library users in a safe and productive environment, for years to come; and

WHEREAS, on June 10, 2014, the City advertised ***Invitation For Bid No. 36-13-14 Renovation and Remodeling of City Public Library Project*** ("IFB") to obtain the materials, labor, equipment, tools, supervision, and related services necessary for the interior renovation and remodeling of the Library, in accordance with the terms, conditions, and specifications contained in the IFB ("Renovation Project"); and

WHEREAS, SA Consultants, LLC ("Contractor"), timely submitted its bid and was evaluated by City administration as the lowest responsive-responsible bidder whose bid, qualifications and references demonstrated to be the most advantageous to the City in the procurement of the Renovation Project; and

WHEREAS, the Contractor has expressed its capability, expertise and willingness to perform the Renovation Project pursuant to IFB requirements, at a cost not to exceed Seven Hundred Thirty Thousand Dollars ($730,000.00); and

WHEREAS, in accordance with the ranking of Contractor by City administration, the City Manager respectfully requests that the Vice Mayor as Acting Mayor and City Council approve the selection of SA Consultants, LLC, in order to accomplish the much needed Renovation Project; and

WHEREAS, the Vice Mayor as Acting Mayor and City Council, find the renovation and remodeling of the City Public Library to be advantageous to the public health, safety and welfare, and thereby authorize the City Manager and City Attorney to negotiate and execute an agreement to accomplish the Renovation Project.

NOW THEREFORE, BE IT RESOLVED BY THE VICE MAYOR AS ACTING MAYOR AND CITY COUNCIL OF THE CITY OF NORTH MIAMI, FLORIDA:

Section 1. Selection Approval. The Vice Mayor as Acting Mayor and City Council of the City of North Miami, Florida, hereby approve the City administration's ranking and selection of SA Consultants, LLC, as the lowest responsive-responsible contractor to provide all materials, labor, equipment, tools, supervision, and related services necessary for the interior renovation and remodeling of the City of North Miami Public Library, in accordance with the terms, conditions, and specifications contained in the *Invitation for Bid No. 36-13-14 Renovation and Remodeling of City Public Library Project*.

Section 2. Authority of City Manager and City Attorney. The Vice Mayor as Acting Mayor and City Council of the City of North Miami, Florida, hereby authorize the City Manager and City Attorney to negotiate and execute an agreement to complete the Renovation Project, at a cost not to exceed Seven Hundred Thirty Thousand Dollars ($730,000.00).

Section 3. Effective Date. This Resolution shall become effective immediately upon adoption.

PASSED AND ADOPTED by a _____ vote of the Vice Mayor as Acting Mayor and City Council of the City of North Miami, Florida, this _____ day of July, 2014.

_____
PHILIPPE BIEN-AIME
VICE MAYOR AS ACTING MAYOR

ATTEST:

_____
MICHAEL A. ETIENNE, ESQ.
CITY CLERK

APPROVED AS TO FORM AND
LEGAL SUFFICIENCY:

_____
REGINE M. MONESTIME
CITY ATTORNEY

SPONSORED BY: CITY ADMINISTRATION

Moved by: _____

Seconded by: _____

Vote:

Vice Mayor as Acting Mayor Philippe Bien-Aime	_____ (Yes)_____ (No)
Councilperson Scott Galvin	_____ (Yes)_____ (No)
Councilperson Carol Keys, Esq.	_____ (Yes)_____ (No)
Councilperson Marie Erlande Steril	_____ (Yes)_____ (No)

Bid Title: Renovation and Remodeling of City Public Library Project
Bid No.: 36-13-14 IFB
Bid Due Date: 07/08/2014 @ 10:00AM

	1	4	2	3
Respondent:	SA Consultants, LLC	MVP Contractors, INC	E.L.C.I. Construction Group, INC	Grace & Naeem Uddin, INC
Address:	12550 Biscayne Blvd Suite 218 North Miami, FL 33181	2100 N. Andrews Avenue Pompano Beach, FL 33069	626 NE 124Th Street North Miami, FL 33161	833 Shotgun Road Sunrise, FL 33326
Contact Person:	Farah Salehi	Christina Devito	Moises B Bichachi	Naeem Uddin
Phone/Cell:	305-857-9220	954-974-3262	305-891-7990	954-693-0620
Email Address:	Farah@saconsultants.co	Christina@mvpcontractorsinc.com	Moises@elciconstruction.com	Nuddin@gnuinc.com

Minimum Requirements:	Yes	No	Yes	No	Yes	No	Yes	No
Sunbiz.org:	X		X		X		X	
Active General Contractors License:	X		X		X		X	
References (3):	X		X		X		X	
Bid Bond / Cashiers:	X		X		X		X	
Attended Mandatory Pre-Bid:	X		X		X		X	
	Yes	No	Yes	No	Yes	No	Yes	No
Local Preference Certification:	X			X	X		X	
Total Project Completion Time:	120 Days		120 Days		120 Days		120 Days	

No.	Description	Qty	U/M	Unit Price	Extended Price	Unit Price	Extended Price	Unit Price	Extended Price	Unit Price	Extended Price
1	Renovation and Remodeling of City Public Library Project (Turnkey)	1	EA	$ 659,000.00	$ 659,000.00	$ 747,019.00	$ 747,019.00	$ 761,675.00	$ 761,675.00	$ 810,761.89	$ 810,761.89
2	Asbestos Abatement	1	EA	$ 34,000.00	$ 34,000.00	$ 27,900.00	$ 27,900.00	$ 37,325.00	$ 37,325.00	$ 40,000.00	$ 40,000.00
3	Café (Alternate)	1	EA	$ 37,000.00	$ 37,000.00	$ 21,797.00	$ 21,797.00	$ 21,450.00	$ 21,450.00	$ 20,000.00	$ 20,000.00
					$ -		$ -		$ -		$ -
			Grand Total (Items 1 - 34):		$ 730,000.00		$ 796,716.00		$ 820,450.00		$ 870,761.89
			Local Preference (-10%):		[73,000.00]		$ -		$ (82,045.00)		$ (87,076.18)
			Evaluation Total:		$ 657,000.00		$ 796,716.00 (1)		$ 738,405.00		$ 783,685.71

(1) Affirmed to being convicted of a Public Entity Crime

Prepared By: Marcanthony Tulloch (Signature)

Reviewed By: Linda Julien (Signature)

Copy #2

SEALED BID

"IMPORTANT SOLICITATION ENCLOSED"

Solicitation No.:	**IFB No. 36-13-14**
Project Name:	**RENOVATION AND REMODELING OF City Public Library Project**
Bid Submitted To:	**City of North Miami** Purchasing Department 776 NE 125th Street North Miami, FL 33161
Bidder Name & Address:	**SA Consultants, LLC** 12550 Biscayne Blvd., Suite 218 Miami, Florida 33181 Tel: 305-857-9220 Fax: 305-857-9221 Email: saconsultants@bellsouth.net
Submittal Deadline:	7/1/14 @ 10:00 AM

Section 4.0
Bid Submittal

DELIVER TO:

City of North Miami
Purchasing Department
776 N.E. 125th Street
North Miami, FL 33161-5654

DUE DATE:

Tuesday, July 8th, 2014
3:00 P.M.

Responses are subject to the Terms and Conditions of this Solicitation and the accompanying Bid Submittal. Such other contract provisions, specifications, drawings or other data as are attached or incorporated by reference in the Bid Submittal, will be received at the office of the Purchasing Department at the address shown above until the above stated time and date, and at that time, publicly opened for furnishing the supplies or services described in the accompanying Bid Submittal Requirement.

Renovation and Remodeling of
City Public Library Project
IFB No. 36-13-14

User Department: City Library

This Bid Submittal Consists of Pages: 22 through 28

5% Bid Bond of the total amount of the bid shall accompany all bids

100% A Performance Bond of the total amount of the bid will be required upon execution of the Contract by the Award Respondent(s) and City of North Miami

PLEASE QUOTE PRICES F.O.B. DESTINATION, LESS TAXES, DELIVERED IN

CITY OF NORTH MIAMI, FLORIDA

NOTE: City of North Miami is exempt from all taxes (Federal, State, Local). Bid price should be less all taxes. Tax Exemption Certificate furnished upon request.

Procurement Agent:
Patrick R. Dulcio
Commodity Code(s):

Respondent Name:

SA Consultants, LLC

RETURN ONE ORIGINAL AND TWO COPIES OF BID SUBMITTAL PAGES AND AFFIDAVITS

FAILURE TO SIGN PAGES HEREIN OF SECTION 4.0 BID SUBMITTAL FORM, WILL RENDER YOUR BID NON-RESPONSIVE. IF APPLICABLE, FAILURE TO COMPLETE THE CERTIFICATION REGARDING LOCAL PREFERENCE FOR THIS SOLOICITATION SHALL RENDER THE VENDOR INELIGIBLE FOR LOCAL PREFERENCE

NORTH MIAMI
FLORIDA

COVER PAGE & CONTACT PERSON INFORMATION

RENOVATION AND REMODELING OF
CITY PUBLIC LIBRARY PROJECT
IFB NO. 36-13-14

Include this sheet as the very first page of your Bid. Please complete the entire form in its entirety. The contact person indicated should be someone the City may contact for any questions or provide any correspondence related to this Solicitation.

Legal Name of Business/Respondent(s): SA CONSULTANTS, LLC

Doing Business As (DBA) *If applicable:* N/A

Federal Employee Identification (FEIN) Number: 65-0962158

Mailing Address: 12550 BISCAYNE BLVD., SUITE 218

City, State, Zip Code: NORTH MIAMI, FL 33181

Contact Persons Name: FARAH SALEHI

Title: MGRM / PRESIDENT

Email Address: FARAH@SACONSULTANTS.CO

Telephone Number: 305-857-9220

Fax Number: 305-857-9221

NORTH MIAMI
FLORIDA

PRICE PROPOSAL FORM

RENOVATION AND REMODELING OF CITY PUBLIC LIBRARY PROJECT
IFB NO. 36-13-14

The prices listed below shall include the total cost to complete the services including but not limited to materials, labor, equipment, bonds, insurances, etc, as necessary to ensure proper delivery of services and/or products requested by the City of North Miami.

RENOVATION AND REMODELING OF CITY PUBLIC LIBRARY PROJECT		
Item No.	Description	Cost
1	Renovation and Remodeling of City Public Library Project (Turnkey)	$ 659,000
2	Asbestos Abatement	$ 34,000
	Grand Total (Lines 1 – 2):	$ 693,000
BID ALTERNATE		
A	CAFÉ	$ 37,000
PROJECT DURATION		
	Total Project Completion Time (Number of calendar days)	120

- The price listed in the Solicitation Price Form shall include the total cost to complete the Work including but not limited to materials, labor, equipment, bonds, insurances, etc, as necessary to ensure proper delivery and installation of the Project as requested by the City.
- Respondent to this Solicitation certifies that all statements made in this document are true and correct to the best of their knowledge. Also the Respondent agrees to hold this offer open for a period of one hundred and eighty (180) days from the deadline for receipt of Response.
- Respondent understand and agree to be bound by the conditions contained in this Solicitation and shall conform with all the requirements.

NORTH MIAMI
FLORIDA

MINIMUM REQUIREMENTS CHECKLIST

RENOVATION AND REMODELING OF
CITY PUBLIC LIBRARY PROJECT

IFB No. 36-13-14

#	Description	Checklist
1.)	The Respondent shall be licensed to do business in the State of Florida.	**Attach Copy of Active Sunbiz.org Registration** ☑
2.)	Respondents must be properly registered to practice their profession and licensed to engage in contracting in the State of Florida at the time of Bid submission. The Respondent shall submit copies of the following: a) **State of Florida General Contractors License**	**Attach Copy of Active License(s)** ☑
3.)	References, at a minimum Respondent must provide at least three (3) references of clients to which it has provided said Services. If available, such references should be representatives of Florida jurisdictions to which the Respondent is currently providing, or has provided, Services within the last five (5) years.	**Attach Copy of City Contract Form A-14** ☑
4.)	All Bids shall be accompanied by an offer guaranty/bid bond in the form of a Certified Check, Cashier's Check or Bid/Proposal Bond in the amount of five percent (5%) of base offer price, payable to the City.	**Attach Copy of City Contract From A-9 Bid Bond / Cashier's Check** ☑

NORTH MIAMI
FLORIDA

RESPONSE SUBMITTAL CHECKLIST

RENOVATION AND REMODELING OF CITY PUBLIC LIBRARY PROJECT

IFB NO. 36-13-14

This checklist is provided for Respondent's convenience only and identifies the sections of this submittal document to be completed and submitted with each response. Any Response received without any one or more of these sections may be rejected as being non-responsive. Please be advised that this checklist may not necessarily complete include all of the requirements listed throughout this Solicitation. It sets guidelines for consideration, and may be added to as the need arises.

No.	City Contract Forms	Checklist
1.)	A-1 Public Entity Crimes Affidavit	✓
2.)	A-2 Non- Collusive Proposal Certificate	✓
3.)	A-3 Local Preference Affidavit *(optional)*	✓
4.)	A-5 Acknowledgement of Addenda *(if applicable)*	✓
5.)	A-6 Disclosure of Subcontractors & Suppliers *(if applicable)*	✓
6.)	A-7 Insurance Requirements	✓
7.)	A-9 Bid Bond	✓

All of the City's Forms can be found on our website at: http://www.northmiamifl.gov/business/purchasing/forms.asp. These forms are fill –in forms. Please ensure to include all applicable forms with your Proposal documents signed and notarized as required. Emailed forms will NOT be accepted.

NORTH MIAMI
FLORIDA

BID SUBMITTAL FORM

RENOVATION AND REMODELING OF
CITY PUBLIC LIBRARY PROJECT
IFB NO. 36-13-14

FEIN NO.: 65-0196121518
(Respondent Federal Employer Identification Number) If none, Respondent Social Security Number

☑ **LOCAL PREFERENCE CERTIFICATION:** For the purpose of this certification, a "local business" is a business located within the limits of City of North Miami that conforms with the provisions of Section 4.62 of the General Terms and Conditions of this Solicitation and contributes to the economic development of the community in a verifiable and measurable way. Place a check here only if affirming Respondent meets requirements for Local Preference. **Failure to complete this certification at this time (by checking the box above) shall render the Respondent ineligible for Local Preference.**

OR

☐ **WORKFORCE LOCAL PREFERENCE CERTIFICATION:** The local preference may be applied to Respondent(s) with a least ten percent (10%) of its total Workforce residing within the geographical boundaries of the City. Place a check here only if affirming Respondent meets the requirements for Workforce Local Preference. **Failure to complete this certification at this time (by checking the box above) shall render the Respondent ineligible for Workforce Local Preference.**

OR

☐ **SUBCONTRACTOR LOCAL PREFERENCE CERTIFICATION:** The local preference may be applied to Respondent(s) that subcontract at least ten percent (10%) of the contractual amount of a City project to Sub-Contractor who are physically located within the City of North Miami. **(Must complete forms A-3a Statement of Intent & A-3b Participation Schedule.)** Place a check here only if affirming Respondent meets the requirements for Sub-Contractor Local Preference. **Failure to complete this certification at this time (by checking the box above) shall render the Respondent ineligible for Sub-Contractor Local Preference.**

All referenced forms can be found on the City's website at:
http://www.northmiamifl.gov/departments/purchasing/forms.aspx

The undersigned Respondent certifies that its Bid is submitted in accordance with the Solicitation specifications and conditions governing this Solicitation, and that the Respondent will accept any award(s) made to him as a result of this Solicitation.

RESPONDENT NAME: SA CONSULTANTS, LLC

DBA *(If any)*: N/A

STREET ADDRESS: 12550 BISCAYNE BLVD., SUITE 218

CITY/STATE/ZIP CODE: NORTH MIAMI, FL 33181

TELEPHONE NO.: 305-857-9220 FAX NO.: 305-857-9221

E-MAIL: FARAH@SACONSULTANTS.CO

By signing this document the Respondent agrees to all Terms & Conditions of this Solicitation and the resulting Contract.

AUTHORIZED SIGNATURE Farah Salehi Date 7/1/14
PERSON AUTHORIZED TO ENTER INTO CONTRACTUAL AGREEMENT

PRINT NAME OF AFFIANT FARAH SALEHI

TITLE OF OFFICER MGRM / PRESIDENT

THE EXECUTION OF THIS FORM CONSTITUTES THE UNEQUIVOCAL OFFER OF RESPONDENT TO BE BOUND BY THE TERMS OF ITS BID. FAILURE TO SIGN THIS SOLICITATION WHERE INDICATED ABOVE BY AN AUTHORIZED REPRESENTATIVE SHALL RENDER THE BID NON-RESPONSIVE. THE CITY MAY, HOWEVER, IN ITS SOLE DISCRETION, ACCEPT ANY BID THAT INCLUDES AN EXECUTED DOCUMENT WHICH UNEQUIVOCALLY BINDS THE RESPONDENT TO THE TERMS OF ITS OFFER

SECTION 3.0
SCOPE OF SERVICES / TECHNICAL SPECIFICATIONS

3.1 SCOPE OF WORK

The Work includes the interior renovation and remodeling within the existing building of North Miami Public Library (Library). The facility will remain closed throughout the anticipated construction Work period. The Work includes;

- Removal of existing ceiling grids and tiles
- Removal of carpet tiles and ceramic tiles within project scope
- Addition of new interior partitions to enclose the "Young Adults" and Children's Area"
- Addition of new meeting rooms
- Addition of two (2) new unisex Americans with Disabilities Act ("ADA") compliant restrooms to meet the Florida Building Code
- All existing systems, Utilities, life safety devices and finishes are to be adjusted as required to maintain required coverage and ratings
- The existing construction in the facility is considered an assembly occupancy (A-3) and will maintain the construction protection at areas outside the project limit line
- The Scope of Work does not include any work to the existing roof or main building envelope.

3.2 CAFÉ – BID ALTERNATE

The Scope of Work shall include a new service counter for the distribution of the snacks, cold food and beverages (please note, it will not serve hot meals prepared on site) and includes a new storefront door and new ADA compliant sidewalk to connect to the main plaza of the existing building. The Scope of Work proposed also incorporates the removal of existing ceiling grids and acoustical tiles, vinyl composition tiles, and base as well as refinish and repaint of existing walls.

3.3 CONSTRUCTION PLANS

Please review the following attachments

- Attachment A: Construction Documents Bid Set
- Attachment B: Construction Drawing Bid Set

3.4 COMMUNITY BENEFIT PLAN

The Contractor will be required to submit, a Community Benefits Plan for approval by the City Manager. The Community Benefit plan shall be exclusive of the City of North Miami's Local Preference requirement, under Section 7-151 of the City Code. The Contractor's Community Benefits Plan shall be incorporated into and shall become a part of the agreement entered into between the City and the selected Bidder.

3.5 PROJECT COORDINATION

Upon Issuance of a NTP the Contractor will conduct Project coordination meetings every two weeks, or as agreed to by the City, through the duration of the Project. The Contractor will be responsible for taking and distributing official meeting minutes that accurately reflect the discussions and decisions conveyed at each meeting.

3.6 ASBESTOS ABATEMENT

Asbestos survey has been completed, and asbestos has been found within building. The Contractor will be responsible the asbestos abatement. Please see Attachment B: Asbestos Survey Report.

END OF SECTION

NORTH MIAMI
FLORIDA

MINIMUM REQUIREMENTS CHECKLIST

RENOVATION AND REMODELING OF
CITY PUBLIC LIBRARY PROJECT

IFB No. 36-13-14

#	Description	Checklist
1.)	The Respondent shall be licensed to do business in the State of Florida.	Attach Copy of Active Sunbiz.org Registration ☑
2.)	Respondents must be properly registered to practice their profession and licensed to engage in contracting in the State of Florida at the time of Bid submission. The Respondent shall submit copies of the following: a) **State of Florida General Contractors License**	Attach Copy of Active License(s) ☑
3.)	References, at a minimum Respondent must provide at least three (3) references of clients to which it has provided said Services. If available, such references should be representatives of Florida jurisdictions to which the Respondent is currently providing, or has provided, Services within the last five (5) years.	Attach Copy of City Contract Form A-14 ☑
4.)	All Bids shall be accompanied by an offer guaranty/bid bond in the form of a Certified Check, Cashier's Check or Bid/Proposal Bond in the amount of five percent (5%) of base offer price, payable to the City.	Attach Copy of City Contract From A-9 Bid Bond / Cashier's Check ☑

FLORIDA DEPARTMENT OF STATE
DIVISION OF CORPORATIONS

Detail by Entity Name

Florida Limited Liability Company

SA CONSULTANTS, LLC

Filing Information

Document Number	L99000007077
FEI/EIN Number	650962158
Date Filed	10/21/1999
State	FL
Status	ACTIVE
Last Event	AMENDMENT
Event Date Filed	09/05/2000
Event Effective Date	NONE

Principal Address

12550 BISCAYNE BLVD, SUITE 218
MIAMI, FL 33181

Changed: 12/10/2012

Mailing Address

12550 BISCAYNE BLVD, SUITE 218
MIAMI, FL 33181

Changed: 12/10/2012

Registered Agent Name & Address

BETZ, GILBERT C
2025 S.W. 32 AVE.
MIAMI, FL 33145

Authorized Person(s) Detail

Name & Address

Title MGRM

SALEHI, FARAH
12550 Biscayne Blvd.
Suite 218
MIAMI, FL 33181

Title MGR

VAZIRI, HOSHMAND
12550 Biscayne Blvd.
Suite 218
MIAMI, FL 33181

Annual Reports

Report Year	Filed Date
2012	03/12/2012
2013	02/18/2013
2014	01/29/2014

Document Images

01/29/2014 -- ANNUAL REPORT	View image in PDF format
02/18/2013 -- ANNUAL REPORT	View image in PDF format
03/12/2012 -- ANNUAL REPORT	View image in PDF format
01/11/2011 -- ANNUAL REPORT	View image in PDF format
03/22/2010 -- ANNUAL REPORT	View image in PDF format
01/30/2009 -- ANNUAL REPORT	View image in PDF format
01/16/2008 -- ANNUAL REPORT	View image in PDF format
05/07/2007 -- ANNUAL REPORT	View image in PDF format
02/09/2006 -- ANNUAL REPORT	View image in PDF format
04/06/2005 -- ANNUAL REPORT	View image in PDF format
03/08/2004 -- ANNUAL REPORT	View image in PDF format
03/14/2003 -- ANNUAL REPORT	View image in PDF format
01/31/2002 -- ANNUAL REPORT	View image in PDF format
02/05/2001 -- ANNUAL REPORT	View image in PDF format
09/05/2000 -- Amendment	View image in PDF format

STATE OF FLORIDA

DEPARTMENT OF BUSINESS AND PROFESSIONAL REGULATION

CONSTRUCTION INDUSTRY LICENSING BOARD (850) 487-1395
1940 NORTH MONROE STREET
TALLAHASSEE FL 32399-0783

SALEHI, FARAH KHODKAR
SA CONSULTANTS LLC
12550 BISCAYNE BLVD SUITE 218
MIAMI FL 33181

Congratulations! With this license you become one of the nearly one million Floridians licensed by the Department of Business and Professional Regulation. Our professionals and businesses range from architects to yacht brokers, from boxers to barbeque restaurants, and they keep Florida's economy strong.

Every day we work to improve the way we do business in order to serve you better. For information about our services, please log onto **www.myfloridalicense.com**. There you can find more information about our divisions and the regulations that impact you, subscribe to department newsletters and learn more about the Department's initiatives.

Our mission at the Department is: License Efficiently, Regulate Fairly. We constantly strive to serve you better so that you can serve your customers. Thank you for doing business in Florida, and congratulations on your new license!

STATE OF FLORIDA AC# 708796
DEPARTMENT OF BUSINESS AND PROFESSIONAL REGULATION

CGC062626 12/19/12 120248092

CERTIFIED GENERAL CONTRACTOR
SALEHI, FARAH KHODKAR
SA CONSULTANTS LLC

IS CERTIFIED under the provisions of Ch.489 FS
Expiration date: AUG 31, 2014 L12121900582

DETACH HERE

THIS DOCUMENT HAS A COLORED BACKGROUND - MICROPRINTING - LINEMARK - PATENTED PAPER

C#708796

STATE OF FLORIDA

DEPARTMENT OF BUSINESS AND PROFESSIONAL REGULATION
CONSTRUCTION INDUSTRY LICENSING BOARD

SEQ# L12121900582

DATE	BATCH NUMBER	LICENSE NBR
12/19/2012	120248092	CGC062626

The GENERAL CONTRACTOR
named below IS CERTIFIED
under the provisions of Chapter 489 FS.
Expiration date: AUG 31, 2014

SALEHI, FARAH KHODKAR
SA CONSULTANTS LLC
12550 BISCAYNE BLVD SUITE 218
MIAMI FL 33181

RICK SCOTT
GOVERNOR

KEN LAWSON
SECRETARY

DISPLAY AS REQUIRED BY LAW

X00142

Local Business Tax Receipt

Miami-Dade County, State of Florida

-THIS IS NOT A BILL - DO NOT PAY

LBT

4620937

BUSINESS NAME/LOCATION

SA CONSULTANTS LLC

12550 BISCAYNE BLVD 218

NORTH MIAMI FL 33181

RECEIPT NO.

RENEWAL

4824323

EXPIRES

SEPTEMBER 30, 2014

Must be displayed at place of business

Pursuant to County Code

Chapter 8A - Art. 9 & 10

OWNER

SA CONSULTANTS LLC

Worker(s) 7

SEC. TYPE OF BUSINESS

196 GENERAL BUILDING CONTRACTOR

CGC062626

PAYMENT RECEIVED

BY TAX COLLECTOR

$45.00 07/15/2013

TXHS1-13-026718

ORIGINAL

This Local Business Tax Receipt only confirms payment of the Local Business Tax. The Receipt is not a license, permit, or a certification of the holder's qualifications, to do business. Holder must comply with any governmental or nongovernmental regulatory laws and requirements which apply to the business.

The RECEIPT NO. above must be displayed on all commercial vehicles - Miami-Dade Code Sec 8a-276.

For more information, visit www.miamidade.gov/taxcollector

NORTH MIAMI
FLORIDA

City of North Miami

776 N.E.125 Street • North Miami, FL 33161 • 305-893-6511

Business Tax Receipt/Certificate of Use

Issued Date: 10/1/2013
Expiration Date: 9/30/2014
Business Tax Receipt #: BT-004264

OFFICE: GENERAL CONTRACTING AND CONSTRUCTION MANAGEMENT SERVICES

Business Name / Address:
SA CONSULTANTS
12550 BISCAYNE BLVD, 218
NORTH MIAMI, FL 33161

SA CONSULTANTS, LLC
SA CONSULTANTS
12550 BISCAYNE BLVD
218
NORTH MIAMI, FL 33161

Michael A. Etienne, Esquire, City Clerk

***NOTICE*: BUSINESS TAX RECEIPT MUST BE TRANSFERED WHEN BUSINESS IS MOVED OR SOLD.**

NON-TRANSFERABLE • POST IN A CONSPICUOUS PLACE • NON-TRANSFERABLE

State of Florida
Board of Professional Engineers
2639 North Monroe Street, Suite B-112
Tallahassee, FL 32303-5268

SA Consultants, LLC
12550 BISCAYNE BLVD
SUITE 218
MIAMI, FL 33181

Each licensee is solely responsible for notifying the Florida Board of Professional Engineers in writing the licensee's current address.

Name changes require legal documentation showing name change. An original, a certified copy, or a duplicate of an original or certified copy of a document which shows the legal name change will be accepted unless there is a question about the authenticity of the document raised on its face, or because the genuineness of the document is uncertain, or because of another matter related to the application.

At least 90 days prior to the expiration date shown on this license, a notice of renewal will be sent to your last known address. If you have not yet received your notice 60 days prior to the expiration date, please call (850) 521-0500, or write, Florida Board of Professional Engineers, 2639 North Monroe Street, Suite B-112,Tallahassee, FL 32303-5268 or e-mail: board@fbpe.org. Our website address is http://www.fbpe.org.

State of Florida

Board of Professional Engineers

Attests that

SA Consultants, LLC

is authorized under the provisions of Section 471.023, Florida Statutes, to offer engineering services to the public through a Professional Engineer, duly licensed under Chapter 471, Florida Statutes.

Expiration: 2/28/2015
Audit No: 228201503606

Certificate of Authorization

CA Lic. No: 8684

NORTH MIAMI
FLORIDA

REFERENCES (Form A-14)

List a minimum of three (3)

Name:_____ Contact:_____

Address:-See attached list of References & Completed Projects- &

City:CERTIFICATIONS - State:_____ Zip:_____

Contact Person:_____

Phone:_____ E-Mail:_____

Type of Job Performed & Cost_____

Name:_____ Contact:_____

Address:_____

City:_____ State:_____ Zip:_____

Contact Person:_____

Phone:_____ E-Mail:_____

Type of Job Performed & Cost_____

Name:_____ Contact:_____

Address:_____

City:_____ State:_____ Zip:_____

Contact Person:_____

Phone:_____ E-Mail:_____

Type of Job Performed & Cost_____

PRINT

List of References

LIST OF REFERENCES

1. Contact Person: **Mrs. Farideh Gozleveli, Phd – Owner Representative**
   Firm Name/Address: Dr. Tamer Gozleveli, DO, PA
   1 SW 129 Avenue, Suite 109, Pembroke Pines, Florida
   Tel: 954-931-0958
   Email: fgozleveli@gmail.com
   Project: Interior Renovation for Doctor Gozleveli Office
   Project Description: Design-Build; interior build out for medical facility
   Completion Date: August 2012

2. Contact Person: **Mr. Rafael Cardozo - Owner**
   Firm Name/Address: Tambourine Creative
   2941 NW 62 Street, Suite 201, Ft. Lauderdale, Florida
   Tel: 954-975-2220
   Email: Rafael@tambourinecreative.com
   Project: Future Offices of Tambourine Creative
   Project Description: Interior build out of high end office building
   Completion Date: April 2012

3. Contact Person: **Mr. Mike Caban – Facility Director**
   Firm Name/Address: Miami Country Day School
   601 NE 107 Street, Miami, Florida
   Tel: 305-758-5569
   Email: cabanm@miamicountryday.org
   Project: Outdoor Covered Stage (Amphitheatre) - Miami, Florida
   Project Description: Construction of Amphitheatre
   Completion Date: September 2010

4. Contact Person: **Mr. Robert Wunsch, AIA - Architect**
   Firm Name/Address: Vaughn, Wunsch, Masullo Architects, PA / CPZ Architects
   4316 W. Broward Blvd, Plantation, Florida
   Tel: 954-568-6009
   Email: rwunsh@vwmarchitects.com / bob@cpzarchitects.com
   Project No. 1: Riverland Elementary School - Fort Lauderdale, Florida
   Project Description: Exterior Remediation Renovations
   Completion Date: Feb 2009
   Project No. 2: Village Elementary School - Sunrise, Florida
   Project Description: ADA Restroom Renovation
   Completion Date: April 2009

5. Contact Person: **Mr. Jorge Azze, AIA - Architect**
   Firm Name/Address: Azze Architecture, Inc
   7194 SW 47th Street, Miami, Florida
   Tel : 305-663-2666
   Email: jazze@bellsouth.net
   Project: Lighthouse Café Replacement – Bill Baggs Cape, FL
   Project Description: Construction of new one story restaurant, coastal project
   Completion Date: February 2007

LIST OF REFERENCES

6. Contact Person: **Mr. Michael Maxwell – Architect & Owner Representative**
   Firm Name/Address: MAXWELL + Partners
   1070 Shoreland Blvd, Miami Shores, Florida
   Tel: 305-978-1429
   Email: mmaxwell@maxwellpartners.net
   Project No.1: Miami Shores Presbyterian Church
   Project Description: Renovation of two wings of K5 Elementary School Building
   Completion Date: June 2006
   Project No. 2: Economic Opportunity Family Health Center Clinics:
   Project Description: JTCHC Site Renovation (Completion: Dec 2005)
   Flamingo Pediatric Clinic Interior Renovations (Completion: Feb 2005)

7. Contact Person **Mr. Bruce Keir - Owner**
   Firm Name/Address: Community Bank of Broward
   2400 N Commerce Parkway, # 200, Weston, Florida
   Tel: 954-659-0000
   Project: Community Bank of Broward - Hallandale, Weston & Hollywood branch
   Project Description: Build-Out Construction of office Space
   Completion Date: November 2008

8. Contact Person: **Mr. Richard Cabrera, Owner Representative**
   Firm Name/ Address: Miami Dade County Parks & Recreation
   11395 SW 79th Street, Miami, Florida
   Tel: 305-596-4460 ext: 236
   Email: rc93@miamidade.gov
   Project No. 1: Tropical Estates Recreation - Miami, Florida
   Project Description: Renovation & Parking Lot Lighting
   Completion Date: December 2007
   Project No. 2: Continental Park Rec. Bldg/Tennis Renovation - Miami, Florida
   Project Description: Renovation & Parking Lot Lighting
   Completion Date: June 2007

9. Contact Person: **Mr. Osvaldo Landera, AIA - Architect**
   Firm Name/Address: Landera Associates, PA
   8800 SW 88 Terr., Miami, Florida 33173
   Tel: 305-662-1660
   Email: olandera@landeraassociates.com
   Project: MDFRD Highland Oaks Station 63 (Phase I) - Miami, Florida
   Project Description: Renovate West end of existing Building to be used as a temporary Fire Rescue Station
   Completion Date: December 2007

List of Completed Projects

LIST OF COMPLETED PROJECTS

Project Name:	**Health Care IT - Support**
Project Address:	1SW 129 Avenues, Suite 304, Pembroke Pines, FL 33312
Owner:	Mrs., Farideh Gozleveli, PhD
Contact:	Mrs. Farideh Gozleveli, PhD (954) 931-0958
Architect:	Iraj S. Shojaie, Architect Mr. Iraj Shojaie, (954-370-6300)
Contract Amount:	$ 30,000.00
Completion Date:	January 2013
Construction Type:	Design Build – Interior Build Out
Project Description:	Design, and construction of 1000 SF interior office build-out.

Project Name:	**Sunnyreach Acres Stucco Repair**
Project Address:	100 SW 18th Avenue, Fort Lauderdale, FL
Owner:	The Housing Authority of Fort Lauderdale
Contact:	Mr. Anthony Moten, Project Mgmt. 954-467-8012
Architect:	Barranco Gonzalez Architecture, Mr. John Barranco (954) 961-7675
Completion Date:	November 2012
Type of Construction:	Water Intrusion Remediation
Contract Amount:	$ 460,352.00
Project Description:	5 Story Multifamily Public Housing Facility for elderly and disabled. Water intrusion remediation of all exterior walls, windows, doors, roof parapet walls, concrete eyebrow overhangs, A/C wall units and louvers. Work included sound testing of all exterior walls, removing and replacing all delaminated stucco and spalding concrete.

Project Name:	**Doctor Gozleveli Clinic**
Project Address:	1SW 129 Avenue, Suite 109, Ft. Lauderdale, FL 33312
Owner:	Dr. Tamer Gozleveli
Contact:	Mrs. Farideh Gozleveli (954- 931-0958)
Architect:	Iraj S. Shojaie, Architect Mr. Iraj Shojaie, (954-370-6300)
Contract Amount:	$ 300,118.00
Completion Date:	August 2012
Construction Type:	Design-Build; High End Interior Built-Out
Project Description:	Design, and construction of 3000 SF medical clinic. The project consisted of large circular reception, waiting room, seven exam rooms, and three doctor offices, large medical assistant station, break room, ADA restrooms , referrals, billings, and file room with medical filing system.

Project Name:	**Offices of Tambourine Creative**
Project Address:	2941 NW 62 Street, Suite 201, Ft. Lauderdale, FL
Owner:	Tambourine Creative
Contact:	Mr. Rafael Cardozo, (954) 975-2220
Architect:	Mr. Antonio Cardozo, (954-249-1106)

LIST OF COMPLETED PROJECTS

Contract Amount:	$ 329,855.00
Completion Date:	February 2012
Construction Type:	High End Interior Office Built-Out
Project Description:	Through team collaboration between Antonio Cardozo Architect, and SA Consultants this 5,000 SF office build out is an exceptional example of team work and extent of attention paid to details. By working closely with the Architect and the Owner, this interior build-out is infused with a rare energy in collaborative design in every level. Scope includes high end offices, break room, kitchen, sleeping room, and ADA Restrooms.

Project Name:	**Horizon Elementary School** **New Fire Sprinkler Protection System & ADA Restroom Renovation**
Project Address:	Sunrise, Florida
Owner:	The School Board of Broward County, Florida
Contact:	Mr. Greg Boardman 754-321-1522
Architect:	Jacobs Engineering Group Mr. Rafael Echeverria 305- 279-2298
Contract Amount:	$663,000.00
Completion Date:	June 2013 (Full Project)
Construction Type:	Safety to Life & Interior ADA Renovation
Project Description:	Installation of new fire sprinkler protection system for 64,000 SF school, and renovation of existing restrooms for ADA code compliance. Scope of work included main sprinkler line connection to the City's main water line and site work. Challenge for this project was to perform all work during the school year while classes were in session, hence work had to be performed after school hours and on the weekends.

Project Name:	**Miami Country Day School-Outdoor Covered Stage Amphitheatre**
Project Address:	Miami, Florida
Owner:	Miami Country Day School
Contact:	Mr. Mike Caban, Facility Director 305-758-5569
Engineer:	Design-Build Professionals Corp. Mr. Masoud Sanaie 305-740-6770
Contract Amount:	$393,000.00
Completion Date:	August 2010
Construction Type:	Design-Build – New construction
Project Description:	Design and construction of an Outdoor Covered Amphitheater complete with site work, raised stage, structural wood beams, metal roof, and associated electrical system designed to handle light & sounds for a large performing art production, along with ADA Accessibility provisions.

Project Name:	**Single Point of Entry-Middle Schools Group A**
Project Address:	**Millennium MS/ Falcon Cove MS/ Silver Trail MS / Henry D. Perry MS** Broward County, Florida
Owner:	The School Board of Broward County, Florida

LIST OF COMPLETED PROJECTS

Contact:	Mr. Antonio Cardozo, Architect 954-249-1106
Architect:	The School Board of Broward County- Design Department
Contract Amount:	$509,455.00
Completion Date:	Silver (8/4/09) / Millennium (11/3/09) / Falcon (1/7/10) / Henry D. Perry (5/30/10)
Construction Type:	New construction and Renovation
Project Description:	**Falcon Cove**: Renovation of existing classroom to a new admission office to create a single point of entry. **Henry D. Perry**: New construction of admission office building consisted of reinforced concrete masonry, metal joists, & modified roof system. Scope included site work, storm drainage, new mechanical and electrical system. **Millennium**: Renovation of a classroom to a new admission office to create a new single point of entry. **Silver Trail**: Complete renovation of 1,000 SF offices to new admission office to accommodate new single point of entry. Challenge to this project was to perform work during school year, and at multiple sites.

Project Name:	**Village Elementary School** **ADA Restroom Renovation**
Project Address:	Sunrise, Florida
Owner:	The School Board of Broward County, Florida
Contact:	Mr. Scott Gillen (754) 321-1588
Architect:	Vaugh, Wunsch, Masullo Architects, PA. / CPZ Architects Mr. Robert Wunsch (954) 568-6009
Contract Amount:	$266,716.00
Completion Date:	April 2009
Construction Type:	ADA Renovations
Project Description:	Renovation of existing class rooms, and public restrooms for ADA Code Compliance.

Project Name:	**Riverland Elementary School** **Exterior Remediation Renovations**
Project Address:	Ft. Lauderdale, Florida
Owner:	The School Board of Broward County, Florida Facilities and Construction Management Department
Architect:	Vaugh, Wunsch, Masullo Architects P.A, Mr. Robert J. Wunsch 7 (954) 568-6009
Contract Amount:	$ 2,160,000.00
Completion Date:	February 2009
Construction Type:	Water Intrusion Remediation
Project Description:	Water Intrusion remediation of existing exterior walls, doors, windows, roof flashings, and roof penetrations of 59,000 SF elementary school. Sound tested entire exterior stucco walls, removed and replaced all damaged and delaminated stucco, rusted exterior framed walls, doors, and windows (approximately 80% of exterior stucco was removed & replaced). Challenge of this project was to perform all work during the school year while school was in session, hence, work had to be performed after school hours and on the weekends.

LIST OF COMPLETED PROJECTS

Project Name:	**Claude Pepper Towers -VCA/UFAS Compliance Renovations**
Project Address:	Miami, Florida
Owner:	Miami-Dade Housing Agency
Contact:	Mr. Mario Novoa, PM & Mr. Francisco Trujillo, PA (305) 664-5256
Architect:	Ideal Architectural Design Ms. Maria I. Gonzalez (305) 285-9573
Contract Amount:	$ 712,400.00
Completion Date:	December 2008
Construction Type:	ADA/ UFAS (Uniform Federal Accessibility Standard) Renovations.
Project Description:	Renovated (13) apartments for the (8) story multifamily public housing facility for elderly & disabled. Scope included kitchen shower & bathroom in the apartments, along with public building facilities, public restrooms, ramps, sidewalks, and parking to comply with ADA/UFAS Code.

Project Name:	**Community Bank of Broward-Hollywood Branch**
Project Address:	Hollywood, Florida
Owner:	Community Bank of Broward
Contact:	Mr. Bruce M. Keir, President (954) 377-0903
Architect:	Michael Allen Mosher Architect & Designers, Mr. Michael A. Mosher (954) 920-5030
Contract Amount:	$638,400.00
Completion Date:	November 2008
Construction Type:	Office Build-Out
Project Description:	Converting an existing 4,800 square feet free standing restaurant into a bank facility with offices, teller station, vaults and ADA restrooms. Scope included demolition of exterior wood framed walls, windows, and replacing with new concrete masonry walls and impact resistant doors and windows.

Project Name:	**Miami International Airport-Hanger 7** **Metal Roof Replacement**
Project Address:	Miami Airport , Building 861, Hanger 7
Owner:	Miami-Dade County Aviation Department
Contact:	Mr. Tim Wright Phone: 305-869-4935
Architect:	Arvelo & Associates, Inc. Phone: 305-667-7628
Contract Amount:	$ 873,200.00
Completion Date:	February 2008
Construction Type:	Metal Roof Replacement.
Project Description:	Structural repair and metal roof replacement. Removed 40,000 SF of existing damaged metal roof, repair and strengthen existing metal structures to receive new metal roof system to withstand hurricane wind forces.

Project Name:	**MDFRD Highland Oaks Fire Station 63–Phase I**
Project Address:	Miami, Florida
Owner:	Miami-Dade County Fire Rescue
Contact:	Mr. Jesus Farinas (786) 331-4507

LIST OF COMPLETED PROJECTS

Architect:	Landera & Associates, PA, Mr. Osvaldo Landera (305) 662-1660
Contract Amount:	$ 795,000.00
Completion Date:	July 2007
Construction Type:	Renovation & Site Improvements
Project Description:	Demolished existing FDOT warehouse to create a new Fire Rescue Station for Miami- Dade County Fire Dept. accommodating ALS Hasmat Engines, with new Offices, commercial kitchen, ADA bathrooms, living and sleeping quarters. Scope included, site preparation, new water, sewer, and electrical connection. New generator, covered canopies, access controls, and site lightings.

Project Name:	**Tropical Estates Rec Center Renovation & Parking Lot Lighting**
Project Address:	Miami, Florida
Owner:	Miami-Dade County, Parks & Recreation
Contact:	Mr. Richard Cabrera (305) 596-4460 x 236
Architect:	Fullerton Diaz Architects, Ms. Victoria Sim (305) 442-4200
Contract Amount:	$ 658,000.00
Completion Date:	November 2007
Construction Type:	Addition, Renovation & Site Improvements
Project Description:	Complete demolition of interior space, removal of concrete slabs and exterior walls. Construction of new concrete foundation and masonry wall for building addition. New interior build out and finishes, ADA restrooms, kitchen, offices, including new site lighting & MEP upgrade.

Project Name:	**Continental Park** **Recreation Center, Tennis Center Renovation & Parking Lot Lighting**
Project Address:	Miami, Florida
Owner:	Miami-Dade County, Parks & Recreation
Contact:	Mr. Richard Cabrera (305) 596-4460 x 236
Architect:	Fullerton Diaz Architects, Ms. Victoria Sim (305) 442-4200
Contract Amount:	$ 876,405.00
Completion Date:	May 2007
Construction Type:	Addition, Renovation & Site Improvement
Project Description:	This project consisted of two buildings. Complete demolition of interior space for two buildings, removal of concrete slabs and exterior walls in Recreation Building, and construction of new concrete foundation, masonry wall and slab to enlarge recreation building. Interior build-out consisted of offices, kitchen, (4) ADA group restrooms, play room, and common area. Scope also included new metal roof, MEP upgrade, site work, ADA ramps, and site lighting.

Project Name:	**Lighthouse Café – Bill Baggs Cape Florida**
Project Address:	1200 Crandon Boulevard, Key Biscayne, Fl 33149
Owner:	State of Florida, Bureau of Design & Recreation Services
Contact:	Mr. Michael Renard, Contract Mngr (850) 488-5372 Mr. Shaun Allen, PM (305) 361-8779

LIST OF COMPLETED PROJECTS

Architect:	Azze Architecture, Mr. Jorge Azze (305) 663-2666
Contract Amount:	$ 917,469.00
Date of Completion:	February 2007
Construction Type:	New Coastal Construction / Restaurant
Project Description:	Construction of new one story restaurant. This ground up coastal project is a wood frame construction on wood piles, including wood floor joist, wood trusses and beams. Scope consisted of interior build out and finishes, ADA accessibility ramps and provisions, commercial kitchen equipments, exhaust hood, grease trap, water, sewer and electrical connections.

Project Name:	**Miami Shores Presbyterian School**
Project Address:	Miami Shores, Florida
Owner:	Miami Shores Presbyterian Church
Contact:	Mr. Michael Maxwell (Owner Rep), (305) 759-9410
Contract Amount:	$ 865,000.00
Date of Completion:	June 2006
Construction Type:	Life Safety & ADA Renovation
Project Description:	Complete renovation of private K5 Elementary School and up grading the two story building to comply with new fire and safety codes. Renovating the Classrooms, corridors, and creating two hour stair enclosure for direct exit to the outside. Scope also included ADA renovation of group restrooms with high end finishes and fixtures and MEP upgrade.

Project Name:	**29 & 30 Year CDBG, Public Works Improvement**
Project Address:	Area bounded by SW 6th St., SW 8th St., SW 8th Ave., and SW 6th Avenue Hallandale Beach, Florida
Owner:	City of Hallandale Beach
Contact:	Mr. Marc Gambrill, P.E. (954) 457-1622
Contract Amount:	$ 612,552.00
Date of Completion:	October 2005
Construction Type:	Public Works, Paving & Drainage.
Project Description:	Construction of new drainage system; Installed Concrete catch basins and drainage pipes. Installed asphalt pavement & concrete sidewalks in two different neighborhoods.

Project Name:	**Jessie Trice Community Health Center (JTCCH)- Site Renovation**
Project Address:	Miami, Florida
Owner:	Economic Opportunity Family Health Center, Inc.
Contact:	Mr. Henry Thompson (305) 805-1700 Ext. 23162 Mr. Michael Maxwell - Maxwell & Partners, Owner Rep. (305) 759-9410
Contract Amount:	$ 428,000.00
Date of Completion:	December 2005
Construction Type:	Site Renovation & Exterior Improvements
Project Description:	Exterior face lift of a 56,000 SF medical facility. Construction of new Perimeter walls, architectural awning canopy, and creation of entrance

LIST OF COMPLETED PROJECTS

courtyard. Scope also included improvement of existing site, parking lot, ADA accessibility Provisions, landscaping, and hardscaping.

Project Name:	**Opa Locka Airport, Building 137 Renovations**
Project Address:	Opa-Locka Airport, Building 137
Owner:	Miami-Dade County Aviation
Contact:	Mr. Alex Montalvo (305) 876-7513
Contract Amount:	$ 271,000.00
Date of Completion:	November 2005
Construction Type:	Interior Build-Out
Project Description:	Renovation of 6,000 SF office space in an industrial warehouse, including construction of 2 hour fire separation wall between office space and industrial space. Constructed new ADA restrooms, upgraded existing MEP & lighting systems.

Project Name:	**North Miami Middle School** Hazard Mitigation Retrofit
Project Address:	13150 NE 7 Avenue, North Miami, Florida
Owner:	Miami Dade County Public Schools
Contact:	Mr. Ed Ford, Project Manager (305) 995-2389
Contract Amount:	$724,500.00
Date of Completion:	August 2004
Construction Type:	Hazard Mitigation Retrofit
Project Description:	Upgrade existing facility for use as hurricane shelter. This fast track project consisted of removing existing exterior windows, reduce window openings with cast in place concrete, and install new impact resistant windows for entire school (over 350 windows). Tie-down reinforcement of all rooftop equipment to comply with the wind uplift requirements. The challenge for this project was performing entire work in (8) weeks instead of (22) weeks per our contract. Due to overcrowding of school the school board requested to perform fast track work during summer recess.

Certifications

The School Board of Miami-Dade County, Florida
Certificate of Contractor Prequalification

is issued to

SA CONSULTANTS, LLC

You are hereby prequalified to submit bids for Miami-Dade County Public Schools projects in accordance with the following dates and bid limits:

6-19-2014	6-19-2015	$1,746,400	$10,000,000	General Contractor
Effective Date	Expiration Date	Single Bid Limit	Aggregate Bid Limit	Type of Work

Brian A. Williams, Esq.
Office of Economic Opportunity

MIAMI-DADE COUNTY PUBLIC SCHOOLS

MINORITY/WOMEN BUSINESS ENTERPRISE CERTIFICATE

THIS CERTIFIES THAT

SA CONSULTANTS, LLC

IS OWNED AND CONTROLLED BY A(N)

AMERICAN FEMALE

PURSUANT TO MIAMI-DADE COUNTY PUBLIC SCHOOL BOARD POLICY 6320.02

August 5, 2013
Issue Date

August 5, 2015
Expiration Date

6512665
Vendor No.

Brian Williams, OEO Development Officer
Office of Economic Opportunity
1450 NE 2nd Avenue, Suite 428
Miami, Florida 33132

BROWARD COUNTY PUBLIC SCHOOLS
SUPPLIER DIVERSITY & OUTREACH PROGRAM
A DIVISION OF
SUPPLY MANAGEMENT & LOGISTICS DEPARTMENT

This Certifies

SA Consultants, LLC

Has met the requirements for certification established by Broward County Public Schools Supplier Diversity & Outreach Program as a (an)

White Female **(WBE)**

2/28/2013
Effective Date

2/28/2016
Expiration Date

7007-3609 00
Certification Number

Marcy Houser
Marcy Houser, M/WBE Specialist

United States Environmental Protection Agency

This is to certify that

SA Consultants, LLC

has fulfilled the requirements of the Toxic Substances Control Act (TSCA) Section 402, and has received certification to conduct lead-based paint renovation, repair, and painting activities pursuant to 40 CFR Part 745.89

In the Jurisdiction of:

All EPA Administered States, Tribes, and Territories

This certification is valid from the date of issuance and expires April 17, 2019

NAT-F121778-1
Certification #

April 03, 2014
Issued On

Michelle Price, Chief
Lead, Heavy Metals, and Inorganics Branch

MIAMI-DADE COUNTY

miamidade.gov

Internal Services Department
Small Business Development
111 NW 1 Street, 19th Floor
Miami, Florida 33128
T 305-375-3111 F 305-375-3160

RECEIVED
DEPT. BUSINESS DEV.

2014 FEB 18 AM 10: 17

February 3, 2014

Ms. Farah Salehi
S A CONSULTANTS, L L C
12250 Biscayne Blvd, #218
North Miami, FL 33181-0000

Anniversary Date: February 3, 2015

Dear Ms. Salehi:

Miami Dade County Small Business Development (SBD) is pleased to notify you of your firm's continuing eligibility as a certified (CSBE, CBE, Micro/SBE, LDB) Small Business Enterprise in accordance with section (2-8.1.1.1.1., 2-10.01, 10.33-02) of the Code of Miami Dade County. Your firm is certified in the categories listed below.

Your (CSBE, MICRO/SBE) certification is continuing through the Anniversary Date listed above, contingent upon your firm maintaining its eligibility based on the criteria outlined in the aforementioned code. You will be notified of your annual responsibilities in advance of the Anniversary Date. You must submit the annual AFFIDAVIT FOR CONTINUING ELIGIBILITY no later than the Anniversary Date to maintain your eligibility. Your firm will be listed in the directory for all certified firms, which can be accessed through the Miami Dade County's SBD website: http://www.miamidade.gov/business/business-certification-programs.asp.

If, at any the time, there is a material change in your firm, you must advise this office, by submitting a status change affidavit and the associated supporting documentation, within thirty (30) days. Changes may include, but are not limited to, ownership, officers, directors, management, key personnel, scope of work performed, daily operations, on-going business relationships with other firms or individuals or the physical location of your firm. After our review, you will receive instructions as to how you should proceed, if necessary. Failure to do so will be deemed a failure on your part to cooperate and will result in action to remove your firm's certification.

If you have any questions or concerns, you may contact our office at 305-375-3111.

Sincerely,

Gary Hartfield, Division Director
Small Business Development

CATEGORIES: (Your firm may bid or participate on contracts only under these categories)

Airport Facilities Construction (MICRO/SBE)
Athletic Facility Construction (MICRO/SBE)
Building Better Communities Const Projects(Bbc) (MICRO/SBE)
Building Construction (MICRO/SBE)
Building Construction Services, New (Incl. Maintenance And Repair Services) (MICRO/SBE)
Building Maintenance, Installation And Repair Services (MICRO/SBE)
Commercial And Institutional Building Construction (CSBE)
Construction Consulting (MICRO/SBE)
Construction Management Services (MICRO/SBE)
Cost Estimating (MICRO/SBE)
Doors And Windows Construction Services (MICRO/SBE)
General Construction (MICRO/SBE)
General Construction - Architectural (MICRO/SBE)
Industrial Building Construction (CSBE)
Inspection Services; Construction Type (MICRO/SBE)
Maintenance And Repair, Industrial Building (MICRO/SBE)
New Housing Operative Builders (CSBE)
New Multifamily Housing Construction (Except Operative Builders) (CSBE)

MIAMI-DADE COUNTY Delivering Excellence Every Day

CATEGORIES: (Your firm may bid or participate on contracts only under these categories)

New Single-Family Housing Construction (Except Operative Builders) (CSBE)
Park Area Construction/Renovation (MICRO/SBE)
Poured Concrete Foundation And Structure Contractors (CSBE)
Public Works And Related Services (MICRO/SBE)
Relocation And/Or Removal Services For Utility Works (MICRO/SBE)
Residential Remodelers (CSBE)
Site Preparation Contractors (CSBE)
Structural Steel And Precast Concrete Contractors (CSBE)
Water And Sewer Line And Related Structures Construction (CSBE)

c: Veronica Clark, SBD
Laurie Johnson, SBD

MIAMI-DADE COUNTY

Carlos A. Gimenez, Mayor

Department of Regulatory and Economic Resources
Small Business Development
111 NW 1 Street, 19th Floor
Miami, Florida 33128
T 305-375-3111 F 305-375-3160

CERT. NO: 2083
Approval Date: 10/22/2012 - CSBE Level 1
Expiration Date: 09/30/2014

ANNUAL ANNIVERSARY: 10/22/2013

October 23, 2012

Ms. Farah Salehi
S A CONSULTANTS, L L C
2150 Coral Way, Suite #7 B
Miami, FL 33145-0000

Dear Ms. Salehi:

Small Business Development (SBD), a division of Regulatory and Economic Resources Department (RER) has completed the review of your application and attachments submitted for certification. Your firm is officially certified as a Community Small Business Enterprise (CSBE) in accordance with section 10-33-02 of the Code of Miami Dade County.

This certification is valid for three years provided there are no changes rendering your firm ineligible for certification. You are required to submit a "Continuing Eligibility Affidavit" annually with specific supporting documents on or before your Anniversary Date as listed above. You will be notified in advance of your firm's Anniversary Date. Failure to comply with the said responsibilities may result in immediate action to decertify your firm. Every three years you will receive a full recertification review that may include an onsite investigation; SBD will also notify you accordingly.

If at any time during the certification period, there is a material change in your firm, including, but not limited to ownership, officers, Director, scope of work being performed, daily operations, affiliations with other business (es) or physical location of the firm, you must notify this office in writing within (30) days. Notification should include supporting documentation. You will receive timely instructions from this office as to how you should proceed, if necessary.

Your company is certified in the following categories as listed below, affording you the opportunity to bid and participate on contracts with small business measures. Please note that the categories listed are very general and are used only to assist our customers in searching the directory for certified firms to meet contract needs. The directory for all certified firms can be accessed on the Miami-Dade County RER website http://www.miamidade.gov/business/business-certification-programs.asp.

Thank you for doing business with Miami Dade County.

Sincerely,

Sheri McGriff, Director
Business Opportunity Support Services
Small Business Development Division
Regulatory and Economic Resources Department (RER)

CATEGORIES: (Your firm may bid or participate on contracts only under these categories)
NEW SINGLE-FAMILY HOUSING CONSTRUCTION (EXCEPT OPERATIVE BUILDERS) (CSBE)
NEW MULTIFAMILY HOUSING CONSTRUCTION (EXCEPT OPERATIVE BUILDERS) (CSBE)
NEW HOUSING OPERATIVE BUILDERS (CSBE)
RESIDENTIAL REMODELERS (CSBE)
INDUSTRIAL BUILDING CONSTRUCTION (CSBE)
COMMERCIAL AND INSTITUTIONAL BUILDING CONSTRUCTION (CSBE)
WATER AND SEWER LINE AND RELATED STRUCTURES CONSTRUCTION (CSBE)
POURED CONCRETE FOUNDATION AND STRUCTURE CONTRACTORS (CSBE)
STRUCTURAL STEEL AND PRECAST CONCRETE CONTRACTORS (CSBE)

Delivering Excellence Every Day

MIAMI-DADE COUNTY

Carlos A. Gimenez, Mayor

Department of Regulatory and Economic Resources
Small Business Development
111 NW 1 Street, 19th Floor
Miami, Florida 33128
T 305-375-3111 F 305-375-3160

CERT. NO: 10756
Approval Date: 10/22/2012 - MICRO/SBE
Expiration Date: 09/30/2014

ANNUAL ANNIVERSARY: 10/22/2013

October 23, 2012

Ms. Farah Salehi
S A CONSULTANTS, L L C
2150 Coral Way, Suite #7 B
Miami, FL 33145-0000

Dear Ms. Salehi:

Small Business Development (SBD), a division of Regulatory and Economic Resources Department (RER) has completed the review of your application and attachments submitted for certification. Your firm is officially certified as a Micro/Small Business Enterprise (MICRO/SBE) in accordance with section 2-8.1.1.1.1 of the Code of Miami Dade County.

This certification is valid for three years provided there are no changes rendering your firm ineligible for certification. You are required to submit a "Continuing Eligibility Affidavit" annually with specific supporting documents on or before your Anniversary Date as listed above. You will be notified in advance of your firm's Anniversary Date. Failure to comply with the said responsibilities may result in immediate action to decertify your firm. Every three years you will receive a full recertification review that may include an onsite investigation; SBD will also notify you accordingly.

If at any time during the certification period, there is a material change in your firm, including, but not limited to ownership, officers, Director, scope of work being performed, daily operations, affiliations with other business (es) or physical location of the firm, you must notify this office in writing within (30) days. Notification should include supporting documentation. You will receive timely instructions from this office as to how you should proceed, if necessary.

Your company is certified in the following categories as listed below, affording you the opportunity to bid and participate on contracts with small business measures. Please note that the categories listed are very general and are used only to assist our customers in searching the directory for certified firms to meet contract needs. The directory for all certified firms can be accessed on the Miami-Dade County RER website http://www.miamidade.gov/business/business-certification-programs.asp.

Thank you for doing business with Miami Dade County.

Sincerely,

Sheri McGriff, Director
Business Opportunity Support Services
Small Business Development Division
Regulatory and Economic Resources Department (RER)

CATEGORIES: (Your firm may bid or participate on contracts only under these categories)
INSPECTION SERVICES, CONSTRUCTION TYPE (MICRO/SBE)
RELOCATION AND/OR REMOVAL SERVICES FOR UTILITY WORKS (MICRO/SBE)
COST ESTIMATING (MICRO/SBE)
CONSTRUCTION CONSULTING (MICRO/SBE)
MAINTENANCE AND REPAIR, INDUSTRIAL BUILDING (MICRO/SBE)
BUILDING MAINTENANCE, INSTALLATION AND REPAIR SERVICES (MICRO/SBE)
GENERAL CONSTRUCTION - ARCHITECTURAL (MICRO/SBE)
BUILDING CONSTRUCTION SERVICES - EQUIPMENT, (MICRO/SBE)
DOORS AND WINDOWS CONSTRUCTION SERVICES (MICRO/SBE)

Bid Bond

NORTH MIAMI
FLORIDA

Form "A-9"

Bidder Must Submit With Bid
BID BOND #007088900

KNOW ALL MEN BY THESE PRESENTS, that we, SA CONSULTANTS, LLC as Principal, hereinafter called Contractor, and WESTCHESTER FIRE INSURANCE COMPANY as Surety, are held and firmly bound unto the City of North Miami, Florida, as a municipal corporation of the State of Florida, hereinafter called the City, in the sum of five percent (5%) of the Base Bid amount of:

FIVE PERCENT OF AMOUNT BID
(Written Dollar Amount)

dollars ($ 5%) lawful money of the United States of American, for the payment of which well and truly to be made, we bind ourselves, our heirs, executors, administrators, successors, and assigns, jointly and severally by these presents.

WHEREAS, the Contractor contemplates submitting or has submitted, a Bid to the City for the furnishing of all labor, materials, equipment, machinery, tools, apparatus, means of transportation for, and the performance of the Work covered in the Bid Documents which include the Project Manual, the detailed Plans and Specifications, and any Addenda thereto, for the IFB 36-13-14 entitled, Renovation & Remodeling of City Public Library Project

WHEREAS, It was a condition precedent to the submission of said Bid that a cashier's check, certified check, or Bid Bond in the amount of five percent (5%) of the Base Bid be submitted with said Bid as a guarantee that the Bidder would, if awarded the Contract, enter into a written Contract with the City for the performance of said Contract, within ten (10) consecutive calendar days after notice having been given of the Award of the Contract.

NOW, THEREFORE, THE CONDITION OF THIS OBLIGATION IS SUCH, that if the Contractor within ten (10) consecutive calendar days after notice of such acceptance, enters into a written Contract with the City and furnishes the Performance and Payment Bonds, satisfactory to the City, each in an amount equal to one hundred percent (100%) of the Contract Price, and provides all required Certificates of Insurance, then this obligation shall be void; otherwise the sum herein stated shall be due and payable to the City of North Miami and the Surety herein agrees to pay said sum immediately, upon demand of the City, in good and lawful money of the United States of America, as liquidated damages for failure thereof of said Contractor.

NORTH MIAMI
FLORIDA

Form "A-9"

IN WITNESS WHEREOF, the above bounded parties have caused this Bond to be executed by their appropriate officials of the 1st day of JULY, 20 14.

WITNESS:

PRINCIPAL:
(If sole Proprietor or partnership)

(Firm Name)

BY

Title: (Sole Proprietor or Partner)

PRINCIPAL (If Corporation)

SA CONSULTANTS, LLC
(Corporate Name)

BY Farah Salehi
(President), FARAH SALEHI

Attest: Farah Salehi PM
(Secretary)

(CORPORATE SEAL)

COUNTERSIGNED BY RESIDENT FLORIDA AGENT OF SURETY:

Gladys Keith

(Copy of Agent's current License as issued by State of Florida Insurance Commissioner

SURETY:

Westchester Fire Insurance Company

By: Gladys Keith
Attorney-in-fact, GLADYS KEITH

(Power of Attorney must be attached)

Power of Attorney

WESTCHESTER FIRE INSURANCE COMPANY

Know all men by these presents: That **WESTCHESTER FIRE INSURANCE COMPANY**, a corporation of the Commonwealth of Pennsylvania pursuant to the following Resolution, adopted by the Board of Directors of the said Company on December 11, 2006, to wit:

"RESOLVED, that the following authorizations relate to the execution, for and on behalf of the Company, of bonds, undertakings, recognizances, contracts and other written commitments of the Company entered into the ordinary course of business (each a "Written Commitment"):

(1) Each of the Chairman, the President and the Vice Presidents of the Company is hereby authorized to execute any Written Commitment for and on behalf of the Company, under the seal of the Company or otherwise.

(2) Each duly appointed attorney-in-fact of the Company is hereby authorized to execute any Written Commitment for and on behalf of the Company, under the seal of the Company or otherwise, to the extent that such action is authorized by the grant of powers provided for in such persons written appointment as such attorney-in-fact .

(3) Each of the Chairman, the President and the Vice Presidents of the Company is hereby authorized, for and on behalf of the Company, to appoint in writing any person the attorney-in-fact of the Company with full power and authority to execute, for and on behalf of the Company, under the seal of the Company or otherwise, such Written Commitments of the Company as may be specified in such written appointment, which specification may be by general type or class of Written Commitments or by specification of one or more particular Written Commitments.

(4) Each of the Chairman, the President and Vice Presidents of the Company in hereby authorized, for and on behalf of the Company, to delegate in writing any other officer of the Company the authority to execute, for and on behalf of the Company, under the Company's seal or otherwise, such Written Commitments of the Company as are specified in such written delegation, which specification may be by general type or class of Written Commitments or by specification of one or more particular Written Commitments.

(5) The signature of any officer or other person executing any Written Commitment or appointment or delegation pursuant to this Resolution, and the seal of the Company, may be affixed by facsimile on such Written Commitment or written appointment or delegation.

FURTHER RESOLVED, that the foregoing Resolution shall not be deemed to be an exclusive statement of the powers and authority of officers, employees and other persons to act for and on behalf of the Company, and such Resolution shall not limit or otherwise affect the exercise of any such power or authority otherwise validly granted or vested.

Does hereby nominate, constitute and appoint Gladys Keith, Michele Council, all of the City of LAKE PLACID, Florida, each individually if there be more than one named, its true and lawful attorney-in-fact, to make, execute, seal and deliver on its behalf, and as its act and deed any and all bonds, undertakings, recognizances, contracts and other writings in the nature thereof in penalties not exceeding Ten million dollars & zero cents ($10,000,000.00) and the execution of such writings in pursuance of these presents shall be as binding upon said Company, as fully and amply as if they had been duly executed and acknowledged by the regularly elected officers of the Company at its principal office.

IN WITNESS WHEREOF, the said Stephen M. Haney, Vice-President, has hereunto subscribed his name and affixed the Corporate seal of the said **WESTCHESTER FIRE INSURANCE COMPANY** this 13 day of August 2013.

WESTCHESTER FIRE INSURANCE COMPANY

Stephen M. Haney , Vice President

COMMONWEALTH OF PENNSYLVANIA
COUNTY OF PHILADELPHIA ss.

On this 13 day of August, AD. 2013 before me, a Notary Public of the Commonwealth of Pennsylvania in and for the County of Philadelphia came Stephen M. Haney ,Vice-President of the **WESTCHESTER FIRE INSURANCE COMPANY** to me personally known to be the individual and officer who executed the preceding instrument, and he acknowledged that he executed the same, and that the seal affixed to the preceding instrument is the corporate seal of said Company, that the said corporate seal and his signature were duly affixed by the authority and direction of the said corporation, and that Resolution, adopted by the Board of Directors of said Company, referred to in the preceding instrument, is now in force.

IN TESTIMONY WHEREOF, I have hereunto set my hand and affixed my official seal at the City of Philadelphia the day and year first above written.

COMMONWEALTH OF PENNSYLVANIA
NOTARIAL SEAL
KAREN E. BRANDT, Notary Public
City of Philadelphia, Phila. County
My Commission Expires September 26, 2014

Notary Public

I, the undersigned Assistant Secretary of the **WESTCHESTER FIRE INSURANCE COMPANY**, do hereby certify that the original POWER OF ATTORNEY, of which the foregoing is a substantially true and correct copy, is in full force and effect.

In witness whereof, I have hereunto subscribed my name as Assistant Secretary, and affixed the corporate seal of the Corporation, this 1 day of July, 2014

William L. Kelly, Assistant Secretary

THIS POWER OF ATTORNEY MAY NOT BE USED TO EXECUTE ANY BOND WITH AN INCEPTION DATE AFTER August 13, 2015.

THE BACK OF THIS DOCUMENT LISTS VARIOUS SECURITY FEATURES THAT WILL PROTECT AGAINST COPY COUNTERFEIT AND ALTERATION.

FLORIDA DEPARTMENT OF INSURANCE

GLADYS HARDY KEITH

License Number A138362

IS LICENSED TO TRANSACT THE
FOLLOWING CLASSES OF INSURANCE

This licensee must have an active appointment with the insurer or employer for which products or services are being marketed. See reverse for additional requirements.

NORTH MIAMI
FLORIDA

RESPONSE SUBMITTAL CHECKLIST

RENOVATION AND REMODELING OF CITY PUBLIC LIBRARY PROJECT

IFB NO. 36-13-14

This checklist is provided for Respondent's convenience only and identifies the sections of this submittal document to be completed and submitted with each response. Any Response received without any one or more of these sections may be rejected as being non-responsive. Please be advised that this checklist may not necessarily complete include all of the requirements listed throughout this Solicitation. It sets guidelines for consideration, and may be added to as the need arises.

No.	City Contract Forms	Checklist
1.)	A-1 Public Entity Crimes Affidavit	✓
2.)	A-2 Non- Collusive Proposal Certificate	✓
3.)	A-3 Local Preference Affidavit *(optional)*	✓
4.)	A-5 Acknowledgement of Addenda *(if applicable)*	✓
5.)	A-6 Disclosure of Subcontractors & Suppliers *(if applicable)*	✓
6.)	A-7 Insurance Requirements	✓
7.)	A-9 Bid Bond	✓

All of the City's Forms can be found on our website at: http://www.northmiamifl.gov/business/purchasing/forms.asp. These forms are fill –in forms. Please ensure to include all applicable forms with your Proposal documents signed and notarized as required. Emailed forms will NOT be accepted.

FORM A-1

NORTH MIAMI
FLORIDA

SWORN STATEMENT UNDER SECTION 287.133(3)(a), FLORIDA STATUTES, ON PUBLIC ENTITY CRIMES

THIS FORM MUST BE SIGNED AND SWORN TO IN THE PRESENCE OF A NOTARY PUBLIC OR OTHER OFFICER AUTHORIZED TO ADMINISTER OATHS.

1. This sworn statement is submitted to CITY OF NORTH MIAMI
[print name of public entity]

by FARAH SALEHI - HGRM / PRESIDENT
[print individual's name and title]

for SA CONSULTANTS, LLC
[print name of entity submitting sworn statement]

whose business address is 12550 BISCAYNE BLVD., SUITE 218, NORTH MIAMI, FL 33181

and (if applicable) its Federal Employer Identification Number (FEIN) is 65-0962158 (If the entity has no FEIN, include the Social Security Number of the individual signing this sworn statement: _____.)

2. I understand that a "public entity crime" as defined in Paragraph 287.133(1)(g), **Florida Statutes,** means a violation of any state or federal law by a person with respect to and directly related to the transaction of business with any business with any public entity or with an agency or political subdivision of any other state or of the United States, including, but not limited to, any bid or contract for goods or services to be provided to any public entity or an agency or political subdivision of any other state or of the United States and involving antitrust, fraud, theft, bribery, collusion, racketeering, conspiracy, or material misrepresentation.

3. I understand that "convicted" or "conviction" as defined in Paragraph 287.133(1)(b), **Florida Statutes,** means a finding of guilt or a conviction of a public entity crime, with or without an adjudication of guilt, in any federal or state trial court of record relating to charges brought by indictment or information after July 1, 1989, as a result of a jury verdict, nonjury trial, or entry of a plea of guilty or nolo contendere.

4. I understand that an "affiliate" as defined in Paragraph 287.133 (1)(a), **Florida Statutes,** means:

   1. A predecessor or successor of a person convicted of a public entity crime; or

   2. An entity under the control of any natural person who is active in the management of the entity and who has been convicted of a public entity crime. The term "affiliate" includes those officers, directors, executives, partners, shareholders, employees, members, and agents who are active in the management of an affiliate. The ownership by one person of shares constituting a controlling interest in another person, or a pooling of equipment or income among persons when not for fair market value under an arm's length agreement, shall be a prima facie case that one person controls another person. A person who knowingly enters into a joint venture with a person who has been convicted of a public entity crime in Florida during the preceding 36 months shall be considered an affiliate.

5. I understand that a "person" as defined in Paragraph 287.133(1)(e), Florida Statutes means any natural person or entity organized under the laws of any state or of the United States with the legal power to enter into a binding contract and which bids or applies to bid on contracts for the provision of goods or services let by a public entity, or which otherwise transacts or applies to transact business with a public entity. The term "person" includes those officers, directors, executives, partners, shareholders, employees, members, and agents who are active in management of an entity.

FORM A-1

NORTH MIAMI
FLORIDA

6. Based on information and belief, the statement which I have marked below is true in relation to the entity submitting this sworn statement. **[indicate which statement applies.]**

☑ Neither the entity submitting this sworn statement, nor any officers, directors, executives, partners, shareholders, employees, members, or agents who are active in the management of the entity, nor any affiliate of the entity has been charged with and convicted of a public entity crime subsequent to July 1, 1989.

☐ The entity submitting this sworn statement, or one or more of its officers, directors, executives, partners, shareholders, employees, members or agents who are active in management of the entity, or an affiliate of the entity has been charged with and convicted of a public entity crime subsequent to July 1, 1989.

☐ The entity submitting this sworn statement, or one or more of its officers, directors, executives, partners, shareholders, employees, members, or agents who are active in the management of the entity, or an affiliate of the entity has been charged with and convicted of a public entity crime subsequent to July 1, 1989. However, there has been a subsequent proceeding before a Hearing Officer of the State of Florida, Division of Administrative Hearings and the Final Order entered by the hearing Officer determined that it was not in the public interest to place the entity submitting this sworn statement on the convicted vendor list. **[attach a copy of the final order]**

I UNDERSTAND THAT THE SUBMISSION OF THIS FORM TO THE CONTRACTING OFFICER FOR THE PUBLIC ENTITY IDENTIFIED IN PARAGRAPH 1 (ONE) ABOVE IS FOR THAT PUBLIC ENTITY ONLY AND, THAT THIS FORM IS VALID THROUGH DECEMBER 31 OF THE CALENDAR YEAR IN WHICH IT IS FILED. I ALSO UNDERSTAND THAT I AM REQUIRED TO INFORM THE PUBLIC ENTITY PRIOR TO ENTERING INTO A CONTRACT IN EXCESS OF THE THRESHOLD AMOUNT PROVIDED IN SECTION 287.017, FLORIDA STATUTES FOR CATEGORY TWO OF ANY CHANGE IN THE INFORMATION CONTAINED IN THIS FORM.

[signature]

Sworn to and subscribed before me this 30 day of June, 2014.

Personally known FARAH SALEHI

OR Produced identification FLDL # S400-240-68-631-0 Notary Public - State of FL

FL DL (Type of Identification) My commission expires 02-15-17

H. Barbara Zeeman

(Printed typed or stamped Commissioned name of Notary Public)

NOTARY PUBLIC STATE OF FLORIDA

H. BARBARA ZEEMAN
MY COMMISSION # EE 860709
EXPIRES: February 15, 2017
Bonded Thru Budget Notary Services

NORTH MIAMI
FLORIDA

FORM "A-2"
NON-COLLUSIVE BIDDER CERTIFICATE
STATE OF FLORIDA
COUNTY OF MIAMI-DADE

Before me, the undersigned authority, on this day personally appeared Farah Salehi (Authorized Officer), who being by me duly sworn, deposes and says:

1. That he/she is the MGRM / President of the corporation/partnership known and styles as SA Consultants, LLC, duly formed under the laws of the State of Florida, on October, ~~2001~~ 1999 is duly authorized to represent such corporation/partnership in the making of this Affidavit and certification.

2. That SA Consultants, LLC (corporation/partnership) has not, within 6 months next preceding the date of this affidavit, entered into any combination, contract, obligation, or agreement to create nor that may tend to create or to carry out any restriction on secret, competitive bidding on the procurement of Renovation & Remodeling of City Public Library, IFB No. 36-13-14, to fix, maintain, increase, or reduce the price set out in the Proposal (bid) on the Project; to fix or maintain any standard or figure whereby the price bid in the Proposal is or has been in any manner affected, controlled, or established; or in any other manner to prevent or lessen competition in the bidding for the Project.

3. That SA Consultants, LLC (corporation/partnership) has not, during such time, entered into, executed, or carried out any contract, obligation, or agreement with any person, corporation, or association of persons not to bid on this Project below a common standard or figure, to keep the price thereof at fixed or graded figures, to preclude a fair and unrestricted competition in the bidding of this Project, to regulate, fix or limit the bidding on the Project, or to abstain from engaging in the bidding on the Project, or any portion thereof.

4. That SA Consultants, LLC (corporation/partnership) has not within 6 months next preceding the date of this Affidavit, either directly or through the instrumentality of trustees or otherwise, acquired assets shares, bonds, franchise, or other rights in or physical properties of any other corporation or partnership for the purpose of preventing or lessening, or in a manner that tends to affect or lessen, competition in the bidding on this Project.

5. That SA Consultants, LLC (corporation/partnership) has not within such time entered into any agreement or understanding to refuse to buy from or sell to any other person, corporation, firm, or association of person who bids on the Project.

NORTH MIAMI
FLORIDA

6. That no officer of SA Consultants, LLC has, within Affiant's knowledge, during such 6 months made on behalf of its or for its benefit any such contract or agreement as is specified in this Affidavit.

7. That these representations and warranties will be true at the time of the bid opening.

Farah Salehi

By: Farah Salehi

Its: MGRM / President

Authority Warranted

SWORN TO and subscribed before me this 30 day of June, 2014.

H. Barbara Zeeman

Notary Public

My Commission Expires:

02-15-17

H. BARBARA ZEEMAN
MY COMMISSION # EE 860789
EXPIRES: February 15, 2017
Bonded Thru Budget Notary Services

LOCAL PREFERENCE FORM A - 3

NORTH MIAMI
FLORIDA

LOCAL PREFERENCE CERTIFICATION

SECTION 1: GENERAL TERM

Local Preference

The evaluation of competitive bids is subject to Section 7-151 of Ordinance 1244 which, except where contrary to federal and state law, or any other funding source requirements, provides that preference be given to local businesses. To satisfy this requirement, the vendor shall affirm in writing its compliance with either of the following objective criteria as of the bid or proposal submission date stated in the solicitation. The following criteria meet the local preference requirements:

1. A business that has a valid local business tax receipt, issued by the City of North Miami at least one year prior to bid or proposal submission, that is appropriate for the goods, services or construction to be purchased **AND;**
2. A business that has a physical business address located within the limits of the City of North Miami from which the vendor operates or performs business. Post Office Boxes are not verifiable and shall not be used for the purpose of establishing said physical address **OR;**
3. A business has at least ten (10%) of its total workforce residing in the City of North Miami or subcontractors at least ten percent (10%) of its total contractors in the City prior to the City's issuance of the solicitation for supplies or services **OR;**
4. The local preference may be applied to firms that subcontract at least ten percent (10%) of the contractual amount of a City project to subcontractor who is physically located within the City of North Miami.

The preference is used to evaluate the submittals received from bidders. A preference of ten percent (10%) shall be given to the local businesses total evaluation points of their proposal or ten percent (10%) shall be given to the local businesses total price of their bid.

Comparison of Qualifications

The preferences established in no way prohibit the right of the City to compare quality of supplies or services for purchase and to compare qualifications, character, responsibility and fitness of all persons, firms or corporations submitting bids or proposals. Further, the preference established in no way prohibit the right of the City from giving any other preference permitted by law instead of preferences granted, nor prohibit the City to select the bid or proposal which is the most responsible and in the best interests of the City.

SECTION 2: AFFIRMATION

LOCAL PREFERENCE CERTIFICATION: The local preference may be applied to businesses located within the limits of the City of North Miami. **A copy of a current Business Tax Receipt must be attached.**

☑ Place a check mark here only if affirming bidder meets requirements for Local Preference. **Failure to complete this certification at this time (by checking the box above) shall render the vendor ineligible for Local Preference.**

WORKFORCE LOCAL PREFERENCE CERTIFICATION: The local preference may be applied to businesses with a least ten percent (10%) of its total workforce residing within the geographical boundaries of the City.

☐ Place a check mark here only if affirming bidder meets requirements for workforce Local Preference. **Failure to complete this certification at this time (by checking the box above) shall render the vendor ineligible for Workforce Local Preference.**

SUBCONTRACTOR LOCAL PREFERENCE CERTIFICATION: The local preference may be applied to businesses that subcontract at least ten percent (10%) of the contractual amount of a City project to subcontractor who are physically located within the City of North Miami. **(Must complete Forms A-3A: Participation Schedule & A-3B: Statement of Intent)**

☐ Place a check mark here only if affirming bidder meets requirements for Subcontractor Local Preference. **Failure to complete this certification at this time (by checking the box above) shall render the vendor ineligible for Subcontractor Local Preference.**

Company Name: SA Consultants, LLC

Authorized Signature: Farah Saleh

NORTH MIAMI
FLORIDA

CERTIFICATE OF USE APPLICATION

Certificate of Use Application and Processing Fee $100.00 (Non Refundable)

DATE: 1/14/13

BUSINESS INFORMATION:

BUSINESS NAME: SA CONSULTANTS, LLC

ADDRESS OF PROPOSED USE: 12550 BISCAYNE BLVD., SUITE 218, MIAMI, FL 33181

PROPERTY FOLIO NUMBER: 06-2229-112-0220

NORTH MIAMI, FLORIDA ZIP CODE: 33181 PHONE NO: 305-857-9220

SQUARE FOOTAGE OF SPACE: 650 SF (REQUIRED FOR ALL APPLICANTS)

OWNER IS (check one): Sole Proprietorship ___ Partnership ___ Corporation ✓

FEDERAL IDENTIFICATION NUMBER: 65-0962158

ALTERNATE MAILING ADDRESS (if applicable)_____

CITY/STATE: _____ ZIP CODE: _____ PHONE NO: _____

A COMPLETE AND DETAILED DESCRIPTION OF THE PROPOSED BUSINESS MUST BE ATTACHED TO THIS APPLICATION. You must include: proposed hours of operation and the leased or owned square footage of proposed business space. If you are a restaurant, bar or nightclub will you serve beer/wine/alcohol? What are the number of seats in the restaurant (indoor and outdoor seating areas) bar or nightclub? Will you have music and entertainment at your restaurant, bar, or nightclub? What type of use/occupancy will the proposed leased or owned space have? (Office, retail, industrial use, restaurant, convenience store...etc) Are you an automotive use? If so what is the nature of your business? If you are a retail operation, are you planning to sell all new merchandise? If you are a Beauty Shop or a Barber Shop, how many cutting stations (chairs) will you have?

$100
pd ck 6811
1/23/13

NORTH MIAMI
FLORIDA
Building and Zoning

Certificate of Use Permit

Date Issued: April 30, 2013 **Certificate No:** ZCU00-2013-00042

This "Certificate of Use" shall serve as formal verification that the proposed use specified on this certificate is a permitted use at the property specified on this certificate and has been found to meet all of the requirements of the City of North Miami Land Development Regulations. The "Approval" is based upon the application and supporting documentation on file with the City of North Miami provided by the applicant. If the information provided in connection with this application for the "Certificate of Use" is found at any time to be incorrect, or if any work has commenced at the property without the proper, required approvals and permits, this "Certicate of Use" shall be **NULL** and **VOID**.

This "Certificate of Use" is being issued as described below:

Street Address: 12550 BISCAYNE BLVD
Suite #: 218
City: NORTH MIAMI
State: FL
Zip Code: 33161
Folio No: 0622291120220
Square Feet: 650

Description Of Use Approved:

OFFICE: GENERAL CONTRACTING AND CONTRUCTION MANAGEMENT SERVICES

Business Name: SA CONSULTANTS, LLC

Business Owner: FARAH SALEHI

This "Certificate of Use" applies only to the above specified proposed use and the above specified property within 180 days of issuance of this "Certificate of Use". This "Certificate of Use" is valid until the use ceases to exist; the use is expanded; the use is amended or changed or the buisness entity ownership information has changed. A Business Tax Receipt must be obtained prior to the commencement of the use specified in this "Certificate of Use".

Zoning District: C-2BW

Approved by: Joanne Martin
(Signature)

Expiration Date: September 30, 2014

Print Name: Joanne Martin

Business (occup. Lic) Receipt

pd ck 1379. $112- 4/30/13.

NORTH MIAMI

CITY OF NORTH MIAMI
BUSINESS TAX RECEIPT APPLICATION

1) BUS. NAME: SA CONSULTANTS LLC
(Name you will put on sign) or (Your name)

2) DBA OR CORP NAME: ———
(Beauty shop/Barber shop, or Medical facility you are working for)

3) Business Address: 12550 BISCAYNE BLVD, SUITE 218
Zip code: 33181 NORTH MIAMI, FL Phone: 305-857-9220

4) Federal Id: 65-0962158 Social Security: ———

5) Mailing Address: 12550 BISCAYNE BLVD., SUITE 218
City: N. MIAMI State: FL Zip: 33181

6) Owners Last Name: SALEHI, First FARAH
Home Address: 1100 BAY DRIVE
City: MIAMI BEACH State: FL Zip code: 33141
Date of birth 4/11/58 Phone: 305-606-1695

Web/email: SACONSULTANTS@BELLSOUTH.NET

Nature of business in detail: GENERAL CONTRACTING & CONSTRUCTION MANAGEMENT

All businesses require a fire inspection be submitted to the City Clerks Office before issuance of a business tax receipt. Please call 786-331-4800

OFFICE USE ONLY

SIC CODE: 1521

FEE: 224.00 → 1/2yr
Oct 1– Sept 30 (fiscal year) $112.00

HOME INDUSTRY: Y___ OR N X

RECEIVED
APR 30 2013
CITY OF NORTH MIAMI
CITY CLERKS OFFICE

776 NE 125 Street | North Miami | Florida | 33161 305.895.9819 Fax: 305-899-0497

NORTH MIAMI
FLORIDA

City of North Miami

776 N.E.125 Street • North Miami, FL 33161 • 305-893-6511

Business Tax Receipt/Certificate of Use

Issued Date: 10/1/2013
Expiration Date: 9/30/2014
Business Tax Receipt #: BT-004264

OFFICE: GENERAL CONTRACTING AND CONSTRUCTION MANAGEMENT SERVICES

Business Name / Address:
SA CONSULTANTS
12550 BISCAYNE BLVD, 218
NORTH MIAMI, FL 33161

SA CONSULTANTS, LLC
SA CONSULTANTS
12550 BISCAYNE BLVD
218
NORTH MIAMI, FL 33161

Michael A. Etienne, Esquire, City Clerk

NOTICE: **BUSINESS TAX RECEIPT MUST BE TRANSFERED WHEN BUSINESS IS MOVED OR SOLD.**

NON-TRANSFERABLE • POST IN A CONSPICUOUS PLACE • NON-TRANSFERABLE

NORTH MIAMI
FLORIDA

FORM A-5

ADDENDUM TO BID DOCUMENTS

IFB NUMBER: 36-13-14

BID OPENING DATE: 7/1/14

To All Bidders:

It is the Bidder's responsibility to assure receipt of all addenda. The Bidder should verify with the designated Contracting Officer prior to submitting a proposal that all addenda have been received. Bidder's are required to acknowledge the number of addenda received as part of their proposals.

This form must be returned with your bid as acknowledgement of receipt of all addenda issued for this RFP,RFQ or IFB and must signed in the space provided below. Bidder's failure to return this form will be deemed non-responsive and will not be considered for contract award.

Please initial to acknowledge receipt of addenda pertaining to this contract:

Addendum No. 1	FS	6/26/14
Addendum No. 2	FS	6/27/14 (CLARIFICATION & INQUIRIES NO. 1)
Addendum No. 3	FS	6/29/14 (CLARIFICATION & INQUIRIES NO. 2)
Addendum No. 4		
Addendum No. 5		
Addendum No. 6		
Addendum No. 7		
Addendum No. 8		
Addendum No. 9		
Addendum No. 10		

Acknowledged by:
Name: FARAH SALEHI / SA CONSULTANTS, LLC
Signature: Farah Salehi
Date: 7/1/14

NORTH MIAMI
FLORIDA

ADDENDUM TO SOLICITATION DOCUMENTS

Posted Date: **June 26, 2014** Addendum No. **01**

Solicitation Title: **Renovation and Remodeling of City Public Library Project**

Solicitation No.: **36-13-14 IFB** Opening Date: **Tuesday, July 1st, 2014 at 10:00AM**

To All Respondents:

It is the Respondents' responsibility to assure receipt of all addenda, clarifications and inquiries regarding this Solicitation. The Respondent should verify with the designated Purchasing Agent prior to submitting a response, that all, if any, have been received. Respondents are required to acknowledge the number of addenda received as part of their response by checking the box indicated on the City Contract Form, A-5 Acknowledgement of Addendum(s).

This addendum is issued to modify the previously issued Solicitation documents and/or given for informational purposes, and is hereby made a part of the Solicitation documents.

Please be advised the Solicitation Opening for the above referenced Solicitation has been changed from 3:00PM to 10:00AM on Tuesday, July 1st 2014.

Project duration will now be a contributing factor in awarding this project. Please find attach to this addendum an update Price Proposal Form which will replace original form located on page 25 of the above referenced Solicitation.

*****All other items remain the same*****
End of Addendum

NORTH MIAMI
FLORIDA

PRICE PROPOSAL FORM

RENOVATION AND REMODELING OF CITY PUBLIC LIBRARY PROJECT
IFB No. 36-13-14

The prices listed below shall include the total cost to complete the services including but not limited to materials, labor, equipment, bonds, insurances, etc, as necessary to ensure proper delivery of services and/or products requested by the City of North Miami.

RENOVATION AND REMODELING OF CITY PUBLIC LIBRARY PROJECT		
Item No.	Description	Cost
1	Renovation and Remodeling of City Public Library Project (Turnkey)	$
2	Asbestos Abatement	$
	Grand Total (Lines 1 – 2):	**$**
BID ALTERNATE		
A	CAFÉ	$
PROJECT DURATION		
	Total Project Completion Time (Number of calendar days)	

- The price listed in the Solicitation Price Form shall include the total cost to complete the Work including but not limited to materials, labor, equipment, bonds, insurances, etc, as necessary to ensure proper delivery and installation of the Project as requested by the City.
- Respondent to this Solicitation certifies that all statements made in this document are true and correct to the best of their knowledge. Also the Respondent agrees to hold this offer open for a period of one hundred and eighty (180) days from the deadline for receipt of Response.
- Respondent understand and agree to be bound by the conditions contained in this Solicitation and shall conform with all the requirements.

NORTH MIAMI
FLORIDA

CLARIFICATION AND INQUIRIES

Posted Date: **June 27, 2014** No. **01**

Solicitation Title: **Renovation and Remodeling of City Public Library Project**

Solicitation No.: **36-13-14 IFB** Opening Date: **Tuesday, July 1st, 2014 at 10:00AM**

To All Respondents:

It is the Respondents' responsibility to assure receipt of all addenda, clarifications and inquiries regarding this Solicitation. The Respondent should verify with the designated Purchasing Agent prior to submitting a response, that all, if any, have been received.

This document is issued to clarity the previously issued Solicitation documents and/or given for informational purposes, and is hereby made a part of the Solicitation documents.

Q.1 Is there an engineer's estimate and/or budget for this project?

A.1 **The total budget for this project is $ 800,000.00**

Q.2 For bonding purposes, will the City add allowances to the project cost?

A.2 **No, the project should stay within the $ 800,000.00 allocated.**

Q.3 What is the project duration? (Realistic 4 to 6 months)

A.3 **The time cannot exceed 120 calendar days**

Q.4 At the pre-bid meeting, we were told that the City will waive the permit cost (only County costs apply). Section 2.27 states that the contractor will pay for permit costs. Please clarify.

A.4 **Contractor is responsible for County permits as applicable.**

Q.5 Does the City have a standard Bid Bond or do will use the Surety's Bid Bond? The same applies for the Performance and Payment Bond.

A.5 **All Bids shall be accompanied by an offer guaranty/bid bond in the form of a Certified Check, Cashier's Check or Bid/Proposal Bond in the amount of five percent (5%) of base offer price, payable to the City.**

Q.6 Sheets A-701, A-702, A-703, A-704, A-705 and A-706 shows a Legend for In-Contract F.F.E. items (F-1000 through F-9000). Plans only shows new casework. Where are the only In-Contract items and how many?

A.6 **There are no in contract furniture/items. Only the new built-ins and casework as shown and indicated. The furniture will be selected and purchased by the City.**

Q.7 The Contract Forms hyperlinks located in the Solicitation are not responding.

A.7 **Please use the following hyperlink www.northmiamifl.gov/departments/purchasing/forms.aspx or visit the City's website (www.northmiamifl.gov) in the Purchasing section under Contract Forms**

Q.8 There are two opening dates in this Solicitation, which date are we to use?

A.8 **The Solicitation Opening Date is Tuesday, July 1st, 2014 at 3:00PM**

*****All other items remain the same*****
End of Clarification and Inquiries

NORTH MIAMI
FLORIDA

CLARIFICATION AND INQUIRIES

Posted Date: **June 29, 2014** No. **02**

Solicitation Title: **Renovation and Remodeling of City Public Library Project**

Solicitation No.: **36-13-14 IFB** Opening Date: **Tuesday, July 1st, 2014 at 10:00AM**

To All Respondents:

It is the Respondents' responsibility to assure receipt of all addenda, clarifications and inquiries regarding this Solicitation. The Respondent should verify with the designated Purchasing Agent prior to submitting a response, that all, if any, have been received.

This document is issued to clarity the previously issued Solicitation documents and/or given for informational purposes, and is hereby made a part of the Solicitation documents.

Q.1 Key Notes #18 on A-200 specifies: New Injected infill into existing CMU Wall Cavity to Achieve 2-Hr. Fire rating. However, no wall section, or height of existing walls are provided. Please specify wall height that require infill.

A.1 **Need to verify if existing walls are already 2-hour fire rated – not included or shown on existing plans. Existing door frame is listed on existing plans as B label (1-hr rated). If not, infill needs to go up to 2nd floor mechanical mezzanine floor slab and supporting tie beam (approx. 10'-0" a.f.f.)**

Q.2 Key Note #19 on A-200 specifies: New Platform & Ramp. However, no specifications, and or details have been provided to indicated what are they made of, and how to be built. Please specify what are the platform & ramp are made of, and provide details & specs.

A.2 **Please refer to Sketch A-SK-1 attached showing proposed details for ramp & platform.**

Q.3 Detail 2/a-ALT-201 & 5/A-ALT-201 provides new Floor Plans for Café's Alt. Bid. No details, or elevation have been provided for New Serving Counters- Key Note #6. Please provide specification, details, elevation for the New Serving Counters.

A.3 **Please refer to elevation 7 on A-Alt-201 and details on A-ALT-741.**

Q.4 For Demolition purposes, the plans do not show what are the height of existing gypsum partition walls. Please clarify.

A.4 **Please remove entire height existing partition walls. As per existing plans, walls go up 24" above existing structure/bottom chord of truss which is shown as 10'-0" a.f.f.**

Q.5 Key Note #15 on D-200, and key Note #14 on A-200 indicate Removal of Existing Library Security System. Please clarify if this is part of this contract.

A.5 **Yes, this is included. Please remove, store and reinstall.**

Q.6 If the answer in question 5 is yes. No information or details have been provided as how they work, and what are they connected to. Please provided sufficient information in order associated cost can be estimated.

A.6 **System shall be removed and relocated to front entry/exit door. All existing conduit and electrical shall be extended as necessary to new location.**

Q.7 Key Note #18 on D-200 specifies the removal of the existing Store Front. Please clarify if the Existing Store Front at the Clear Story (the higher elevation) are also to be removed.

A.7 **Yes, all is to be removed. Identified as tag 18 ABOVE.**

Q.8 Construction Documents do not provide the existing elevation height of underside of existing structure. Please provide elevation of existing structure's underside.

A.8 **As per existing drawings, the top of existing tie beam and bottom chord of existing wood trusses is 10'-0".**

Q.9 Specification sect. 09260-3.05 calls for Fire/Draft Stop Partitions. However, none has shown on the plans. Please clarify.

A.9 **Not applicable. Please disregard.**

Q.10 Specification Sect. 09260-3.1 specifies grouting of Hollow Metal Door Frame, while Architectural Plans sheet A-800 does not show any Grout Filled Frames. Please clarify.

A.10 **Detail on sheet A-800 is only for interior hollow metal frames at gyp. bd. partition walls. Please follow Spec. - Hollow metal door frames at CMU walls are to be grout filled.**

Q.11 Specification Sect. 09900 specifies painting of all Electrical Room Pipes, conduit, and Equipments, while the Plans ID-200 everything in this room as Existing, and does not even specify painting of the room. Please clarify.

A.11 **Not required.**

Q.12 Demolition Plan D-300 shows approximately 14,000 SF of Acoustical ceiling tiles that are to be removed. Asbestos Report quantifies only 11,000 SF of Acoustical ceiling tiles that contain Asbestos. However, it is not clear from the Asbestos Report that acoustical ceiling tiles of which areas (if any) do not contain Asbestos. Please clarify.

A.12 **Please follow report. All ceiling grids and tiles indicated and within project scope are to be removed. The extent of the asbestos containing tiles to be confirmed and verified by G.C. It is our understanding that original building (north side) built in the 1950's contains asbestos tile, not the addition built in the 1980's.**

Q.13 Existing Acoustical Ceiling Tiles shown on D-300 are 24x24 & 24x48" tiles. The Asbestos Report identifies Asbestos in 12"x8" ceiling tiles. We did not observe any 12"x8" tiles at the site. Please clarify.

A.13 **There is an existing "spline" acoustical ceiling tile system attached to the underside of the original existing structure - bottom chord of trusses, and is above the visible dropped acoustical ceiling tile system.**

Q.14 Key Note 6 on Mechanical Drawing states that: Contractor shall take caution not to disturb existing tile ceiling..... Please clarify if this applies to this project, because we could not find item 6 on the plans.

A.14 **Disregard note 6. The existing asbestos ceiling shall be removed before Installation of new diffusers and ductwork.**

Q.15 Key note 3 on Mechanical Plans states that: Contractor shall seal flex ductwork penetrating the upper ceiling with polyurethane foam sealant. Plans do not show or identify on the provided plans any upper ceiling in any details, and or sections. Please clarify if there are any other ceiling other than what are shown on D-300.

A.15 **Disregard note 3. The existing asbestos ceiling shall be removed before Installation of new diffusers and ductwork.**

Q.16 If yes, please identify them on the plans, and show the area with secondary ceiling. Provide sections to show the height of such ceilings, and it relationship with the ceiling shown on D-300, and with AC ductwork. Please also identify what is made of.

A.16 **There is an existing "spline" acoustical ceiling tile system attached to the underside of the original existing structure - bottom chord of trusses, and is above the visible dropped acoustical ceiling tile system. As per original existing drawings the original ceiling at bottom chord is at 10'-0" a.f.f. and new dropped acoustical ceiling is at 9'-6" a.f.f.**

Q.17 Key Note 11 on D-200 states; Existing Plumbing Fixtures to Remain. However, both Toilets are completely being remodeled, receiving new wall & floor tiles, along with new counter. Please clarify, if the existing fixtures are to be removed & re-installed.

A.17 **Yes, that is correct. Remove, store and re-install.**

Q.18 The Door Schedule specifies Stained Grade Flush Doors. The Specification sect. 08210.2.02 specifies Paint Grade Doors, and there is note on plans that states; match existing doors. Existing Doors have both Flush and Panel Doors. Please clarify.

A.18 **Please provide Stain Grade flush doors, to match the majority of existing doors.**

Q.19 The steel door specification specifies Steel Stiffened 14ga metal door for Electrical Room, that is Interior Fire Rated Door. Please confirm, if this is correct.

A.19 **Yes, that is correct. 90 min. fire rated door to match 2-hour fire rated wall.**

Q.20 Key Note #12 on A-800 specifies Veneer Plaster shall extend to 6" above ceiling. Non of the new walls specified are veneer plaster. Please clarify which walls does this note apply to.

A.20 Note does not apply. Please disregard.

Q.21 Will the existing Library furniture and book shelves be removed by Owner before the start of construction? Please advice.

A.21 All built-in casework and furniture indicated on plans as well as all library shelving in the existing Children's and Young Adults areas is to be removed and discarded by contractor. All other shelving and books will be removed by Owner.

Q.22 Legend Notes #8 on Reflective ceiling Plan A-300 states: All security camera locations to have JB's with cover & conduit home run (with pull string) to Security or Data Office as designated by Owner – See Electrical Drawings. However, no cameras are shown on Electrical Plans. Please clarify.

A.22 The existing security cameras are to remain. When the new ceiling is installed the existing cameras shall be re-installed in the same location.

Q.23 Sound insulations are specified for new gypsum partition walls. Are any ceiling insulations required for new acoustical ceilings? Please clarify.

A.23 Yes. Please provide ceiling batt insulation to 4'-0" from wall on either side of partition walls at the new Meeting Room walls only.

Q.24 Plan Legend specifies two types of acoustical ceiling for this project. One is identified as "New Acoustical lay-in Ceiling", that is used throughout this project with exception of Lobby (Exhibition Area). The second one is identified as "High NRC Acoust. Ceiling Tile" and shown with crossed hatched lines through them and are used in the "Lobby (Exhibition area". Legend Notes #15 on Reflective Ceiling Plan A-300 states: Acoustical Ceiling Tile Basis of Design: Armstrong Georgian Square Edge Item 763 & 764. Both of these tiles seem to have the same NRC. On the other hand, Specification Section 09511-2.01 specifies Acoustical Tile Type ACT-2: Plastic faced mineral fiber with NRC range of 0.60 to 0.95. & Acoustical Tile Type ACT-1: Ultima Series with Humiguard Plus with NRC range of 0.70 to 0.95. There too many conflicting information. Please clarify what is the intent of design, and specify correct type of acoustical Ceiling.

A.24 Please disregard the Basis of Design indicated on drawing and Humiguard Plus note indicated in the Spec: Basis of Design should be Armstrong Ultima Series square edge lay-in tile (NRC=.70) throughout with the exception of the Lobby/Exhibition Area. UseOptima Series tegular tile (NRC=.95) with 9/16" Suprafine grid system.

Q.25 Specification Section 09511-2.03 specifies Perimeter Trim; 6" Axiom AX60SCP. None was identified on the plans. Please clarify if Perimeter Trim Axiom AX60SCP are used on this project.

A.25 Please disregard. Axiom perimeter trim not used on this project.

Q.26 Electrical drawings do not show any details for new Telephone/ data Empty Conduits. Are the Empty Telephone/ data Conduits terminated above new ceilings? Please clarify.

A.26 **Yes, the conduit shall terminate in the ceiling with a 90 deg. bend.**

Q.27 Electrical Plans do not show the location of Telephone/ Data Room or T/D Backboard. Please provide location of Telephone/ Data Room.

A.27 **The existing Telephone main board is located in the existing garage area.**

*****All other items remain the same*****
End of Clarification and Inquiries

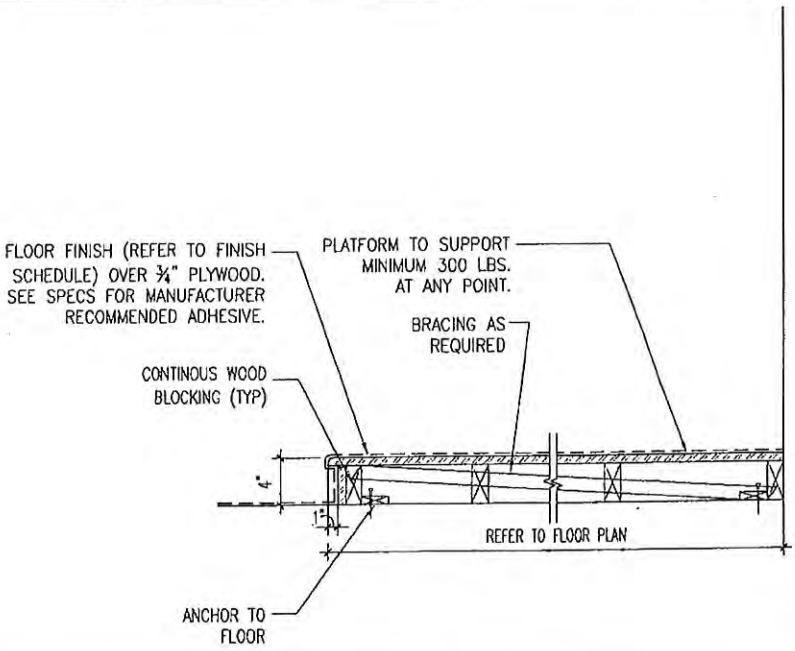

PLATFORM DETAIL

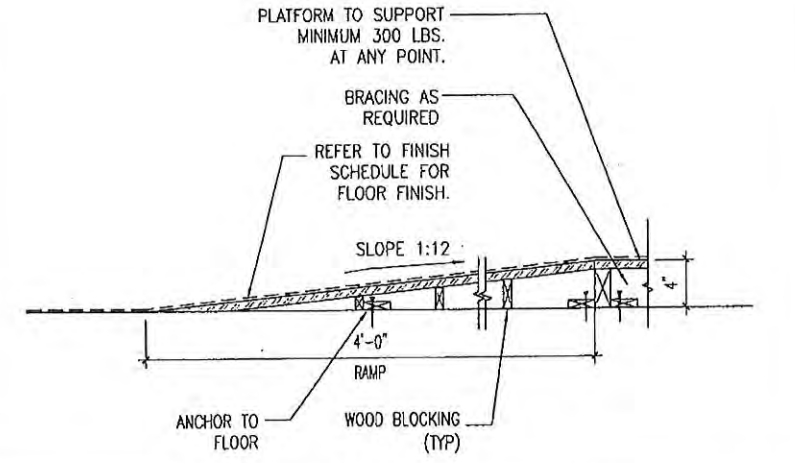

PLATFORM RAMP DETAIL

A-SK-1	1 of 1	Date: 06/27/14	ZYSCOVICH ARCHITECTS	PROJECT:	RNML
		R.F.I.: RFI #1 QUEST 2		PROJECT No.:	1342
				REVISION TO SHEET No.:	A-740
				RE.:	CHILDREN'S AREA

NORTH MIAMI
FLORIDA

Form "A-6"

BIDDER'S DISCLOSURE OF
SUBCONTRACTORS AND SUPPLIERS

RFQ, RFP OR IFB NO. 36-13-14

DISCIPLINE FARAH SALEHI

Team Composition Plan
Please provide the following for tracking purposes only:

Business Association	Business Name	*Business Address*	*Business Phone #*	Describe Type of Work to be Performed	% of Work	Diversity Class. *
Prime Contractor	SA CONSULTANTS	NORTH MIAMI FLORIDA	305 857-9220	DEMO + INTERIOR	74.5	L/F
Subcontractor	AFR ENVIRONMENTAL	MIRAMAR, FL	954 983-0342	ASBESTOS ABATEMENT	4.9	A
Subcontractor	UNITECH MECHANICAL	HIALEAH, FL	305-557-6460	MECHANICAL	7.3	H
Subcontractor	VI ELECTRIC	HIALEAH, FL	786-229-6066	ELECTRIC	11.3	H
Subcontractor	A-A GLASS	NORTH MIAMI FLORIDA	305 200.5840	GLASS	2.0	L
Subcontractor						
Subcontractor						
Subcontractor						
Subcontractor						
Joint Venture						

Diversity Classification:

A = Asian American *B = African American* *F = American Woman*
H = Hispanic American *N = Native American* *L=Local Vendor (North Miami)*

NORTH MIAMI
FLORIDA

Form "A-7"

General Insurance Requirements

Bidders must submit with their bid or proposal, proof of insurance meeting or exceeding the following requirements.

- Workers' Compensation Insurance – Statutory limits and Employer's Liability Insurance - $1,000,000

- Fidelity / Dishonesty Coverage - $500,000 per occurrence

- Professional Liability (Errors and Omissions) Insurance –

    1. $1,000,000 per occurrence, $2,000,000 aggregate on dedicated project limits with a deductible (if applicable) not to exceed $25,000.00 per claim (audited financial statements required). The certificate of insurance shall reference any applicable deductible;
    2. Claims made policy must have an extended coverage reporting period of two years past the coverage completion date;
    3. For Deductible programs or Self Insured Retention Programs an Irrevocable Letter of Credit or performance Bond for amount of SIR/Deductible is required.

- Commercial General Liability Insurance – preferably written on an occurrence form with $1,000,000 for each occurrence, to include contractual liability, personal & advertising injury, and products/completed operations.

- Automobile Liability Insurance – $1,000,000 combined single limit bodily injury & property damage.

The successful Bidder(s) must submit, prior to signing of contract, a Certificate of Insurance including the City of North Miami as additional insured for Commercial General Liability and Auto Liability Insurance. Consultant shall guarantee all required insurance remain current and in effect throughout the term of contract.

Please note: The insurance requirements listed above are general in nature and should only be used as an indication of the most frequently required levels of coverage. Actual requirements may vary and will be fully documented within each individual IFB/RFP.

ACORD CERTIFICATE OF LIABILITY INSURANCE

DATE (MM/DD/YY): 3/27/2014

PRODUCER: Phone - 954 583-5444 Fax - 954-583-2820

Pelican Insurance Agency
100 N W 70th Ste 203
[illegible]ntation, FL 33317

THIS CERTIFICATE IS ISSUED AS A MATTER OF INFORMATION ONLY AND CONFERS NO RIGHTS UPON THE CERTIFICATE HOLDER. THIS CERTIFICATE DOES NOT AMEND, EXTEND, OR ALTER THE COVERAGE AFFORDED BY THE POLICIES BELOW

INSURED
SA Consultants LLC.
12550 Biscayne Blvd. Suite 218
Miami, FL 33181

INSURERS AFFORDING COVERAGE	NAIC #
INSURER A: Scottsdale	
INSURER B: Progressive American Insurance Company	
INSURER C: Lion Insurance Company	
INSURER D:	
INSURER E:	

COVERAGES

THIS IS TO CERTIFY THAT THE POLICIES OF INSURANCE LISTED BELOW HAVE BEEN ISSUED TO THE INSURED NAMED ABOVE FOR THE POLICY PERIOD INDICATED, NOTWITHSTANDING ANY REQUIREMENT, TERM OR CONDITION OF ANY CONTRACT OR OTHER DOCUMENT WITH RESPECT TO WHICH THIS CERTIFICATE MAY BE ISSUED OR MAY PERTAIN, THE INSURANCE AFFORDED BY THE POLICIES DESCRIBED HEREIN IS SUBJECT TO ALL THE TERMS EXCLUSIONS AND CONDITIONS OF SUCH POLICIES. LIMITS SHOWN MAY HAVE BEEN REDUCED BY PAID CLAIMS.

INSR LTR	TYPE OF INSURANCE	POLICY NUMBER	POLICY EFFECTIVE DATE (MM/DD/YY)	POLICY EXPIRATION DATE (MM/DD/YY)	LIMITS	
A	GENERAL LIABILITY	CPS1915450	12/23/2013	12/23/2014	EACH OCCURENCE	$ 2,000,000.00
	X COMMERCIAL GENERAL LIABILITY				DAMAGE TO RENTED PREMISES (Ea Occurrence)	$ 100,000.00
	[ ] CLAIMS MADE [X] OCCUR				MED EXP (Any one person)	$ $5,000
					PERSONAL & ADV INJURY	$ 2,000,000.00
					GENERAL AGGREGATE	$ 2,000,000.00
	GEN'L AGGREGATE LIMIT APPLIES PER:				PRODUCTS - COMP/OP AGG	$ $2,000,000
	X POLICY [ ] PRO-JECT [ ] LOC					
B	AUTOMOTIVE LIABILITY	03647057-6	8/8/2013	8/8/2014	COMBINED SINGLE LIMIT (Ea accident)	$ $1,000,000
	[ ] ANY AUTO					
	X ALL OWNED AUTOS				BODILY INJURY (Per person)	$
	[ ] SCHEDULED AUTOS					
	X HIRED AUTOS				BODILY INJURY (Per accident)	$
	X NON-OWNED AUTOS					
	[ ]				PROPERTY DAMAGE (Per accident)	$
	GARAGE LIABILITY				AUTO ONLY - EA ACCIDENT	$
	[ ] ANY AUTO				OTHER THAN AUTO ONLY: EA ACC	$
	[ ]				AGG	
	EXCESS LIABILITY				EACH OCCURENCE	$
	[ ] OCCUR [ ] CLAIMS MADE				AGGREGATE	$
						$
	[ ] DEDUCTIBLE					$
	[ ] RETENTION $					$
C	WORKER'S COMPENSATION AND EMPLOYERS' LIABILITY	WC71949	4/1/2014	4/1/2015	[X] WC STATU-TORY LIMITS [ ] OTH-ER	
	ANY PROPRIETOR/PARTNER/EXECUTIVE OFFICER/MEMBER EXCLUDED? If yes, describe under SPECIAL PROVISIONS below				E.L. EACH ACCIDENT	$ 1,000,000.00
					E.L. DISEASE - EA EMPLOYEE	$ 1,000,000.00
					E.L. DISEASE - POLICY LIMIT	$ 1,000,000.00
	OTHER					

DESCRIPTION OF OPERATIONS/LOCATIONS/VEHICLES/EXCLUSIONS ADDED BY ENDORSEMENT/SPECIAL PROVISIONS
Certificate holder is also listed as additional insured.

CERTIFICATE HOLDER

Miami Dade County
[illegible]NW 1st Street Ste 2340
Miami,FL 33128
13053751477

X ADDITIONAL INSURED; INSURER LETTER: A

CANCELLATION (See Below) -

SHOULD ANY OF THE ABOVE DESCRIBED POLICIES BE CANCELLED BEFORE THE EXPIRATION DAT THEREOF, THE ISSUING COMPANY WILL ENDEAVOR TO MAIL 30 DAYS WRITTEN NOTICE TO THE CERTIFICATE HOLDER NAMED TO THE LEFT, BUT FAILURE TO MAIL SUCH NOTICE SHALL IMPOSE NO OBLIGATION OR LIABILITY OF ANY KIND UPON THE COMPANY, ITS AGENTS OR REPRESENTATIVES.

AUTHORIZED REPRESENTATIVE
Samuel Jacks

©ACORD CORPORATION 1988

CONSULTANTS
GENERAL CONTRACTORS

CONTRACTOR'S WARRANTY

I, Farah Salehi, is duly authorized representative of **SA Consultants, LLC,** being its President/Qualifier and as such has full authority to execute this Contactor's Warranty, that said Contractor has performed certain work for (**Owner Name**) for the project listed below that said work has now been completed by Contractor in its entirety.

Project No.: _____
Project Name: _____
Project Address: _____
_____

The Contractor does hereby warrants for one full year from Final completion (08/04/09) that all labor, workmanship, material and equipment furnished, supplied and performed with respect to the said Project in strict accordance with the Contract Document.

Should any defects develop in the work for a period of one year as required by the Contract Documents due to improper materials, workmanship or arrangement, or defective equipment, SA Consultants, LLC warrants and covenants that promptly upon notice from the Owner, the defects shall be made good by the Contractor at the time specified, and that any other work affected in correcting such defects shall also be made good at the contractor's sole cost and expense.

This Limited Standard Warranty applies and is limited as follows:

1. To the property only as long as it remains in the possession of the original owner named above.
2. To the construction work that has not been subject to accident, misuse, and abuse.
3. To the construction work that has not been modified, altered, defaced and/or had repairs made or attempted by others.
4. That contractor be notified in writing within 10 days of first knowledge of defect by owner or his/her agents
5. That contractor shall be given first opportunity to make any repairs, replacements and /or corrections to the defective construction at no cost to the owner within a reasonable period of time.
6. Under no circumstances shall contractor be liable by virtue of this warranty or otherwise for damage to a person or property whatsoever for any special, indirect, secondary or consequential damages of any nature however arising out of the use or inability to use because of the construction defect.
7. Excluded from this warranty are materials and workmanship covered by warranties by others.

_____
(Signature) (Date) (corporate seal)

Farah Salehi - President
(Print Name)