HAZEN AND SAWYER
Environmental Engineers & Scientists

NORTH MIAMI
FLORIDA

Presentation

Upgrades to Winson Water Treatment Plant

December 11, 2012

1002-557

Project Background

- Winson Water Plant built circa 1964
- 9 mgd AADF Plant
- Traditional Lime Softening Plant
- Raw Water Source: Biscayne Aquifer with 8 wells
- FSAWWA Region VII Best Tasting Water
  - Winner 2009
  - Runner-up 2010

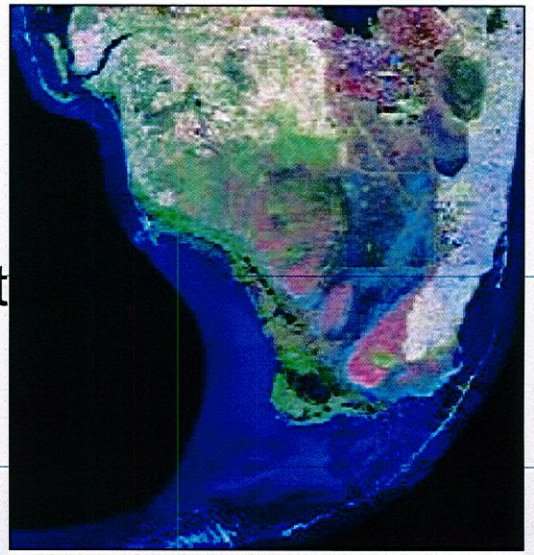

Impetus for the Project

- New Regulatory Conditions
  - Lead and Copper Rule (LCR)
  - Bird Rule (Uncovered Finished Water Reservoirs)
  - 4-log Virus Reduction (Ground Water Rule)
  - Regional Water Availability Rule (RWAR)
- Age of the Plant
  - No major rehab since plant was built
- Population Increase

Table 1.1
Finished Water Demand Forecast

Calendar Year	2010	2015	2020	2025
Total Finished Water Demand (MGD)	12.86	13.42	13.99	14.53

HAZEN AND SAWYER
Environmental Engineers & Scientists

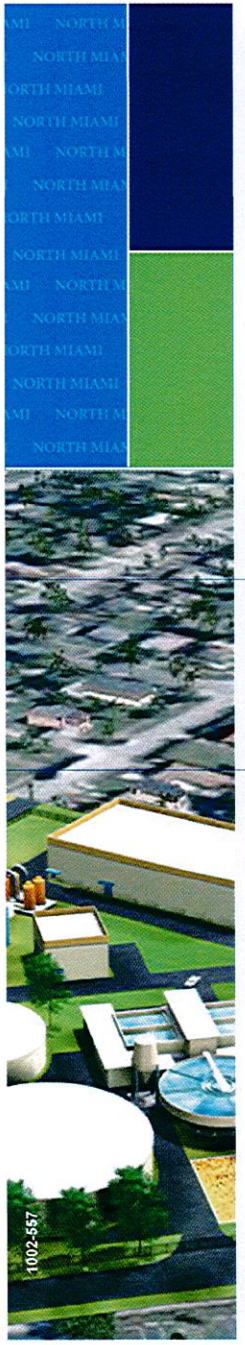
1002-557

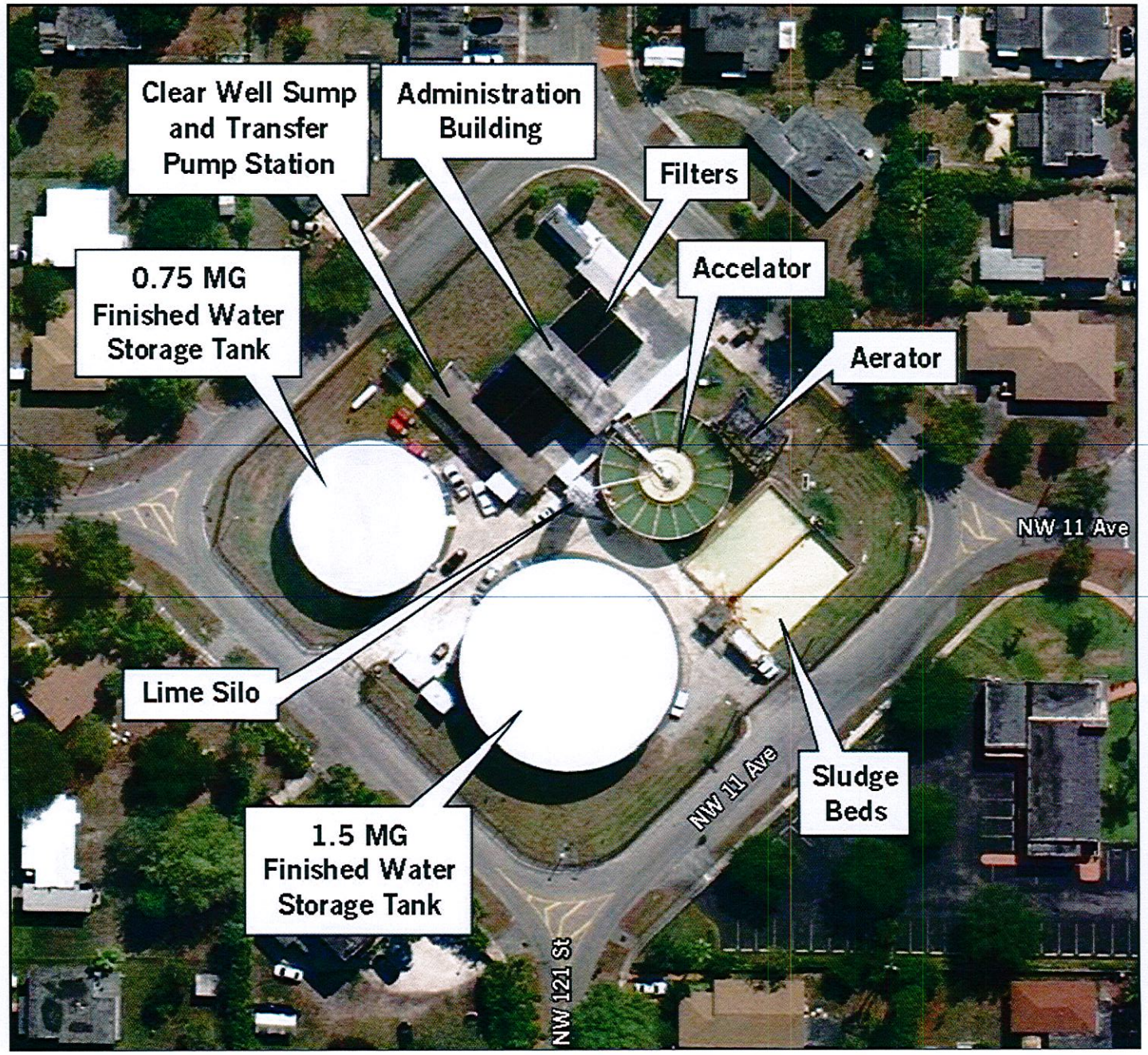
Clear Well Sump and Transfer Pump Station
Administration Building
Filters
Accelator
Aerator
0.75 MG Finished Water Storage Tank
Lime Silo
1.5 MG Finished Water Storage Tank
Sludge Beds
NW 11 Ave
NW 11 Ave
NW 121 St

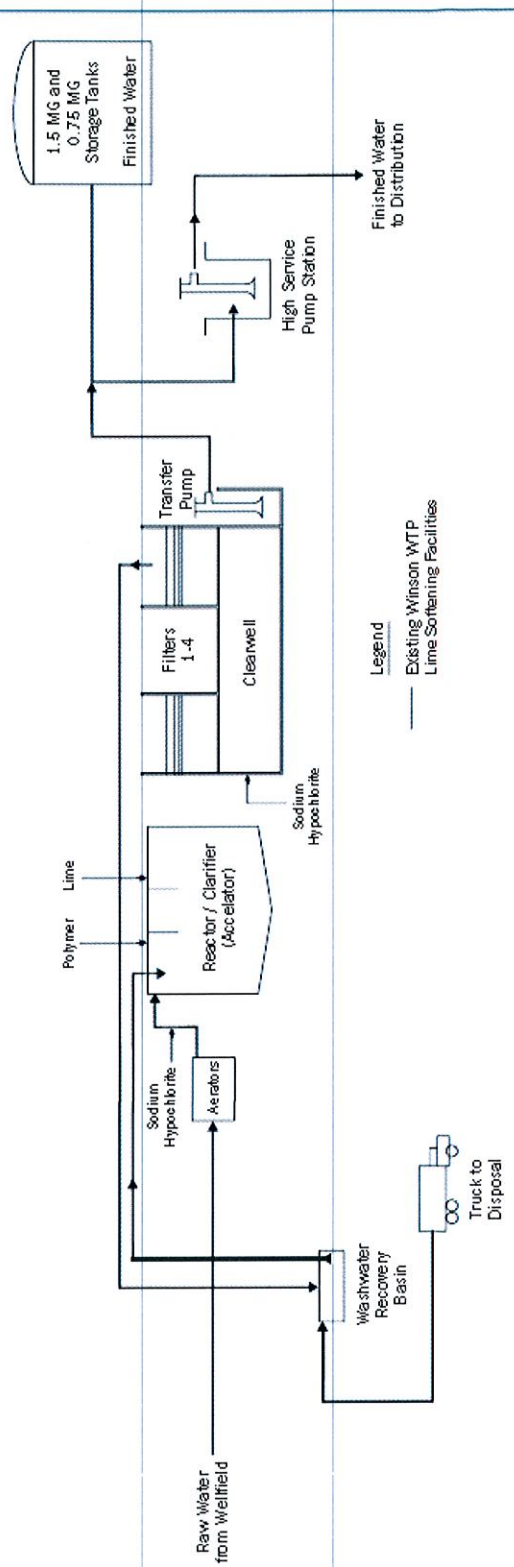

44238-001TM2.ai

Figure 3-3
Winson Water Treatment Plant Existing Process

Work involved in upgrading the Winson Water Plant

- Feasibility Study – to determinee best course of action and concept level cost and schedule
- RFQ process to hire Engineer for Design and Construction Management
- Task 1 Water System Alternatives Analysis
  - Concluded that because of reduced population projections, continuing to buy water from MDWASD was most cost effective solution

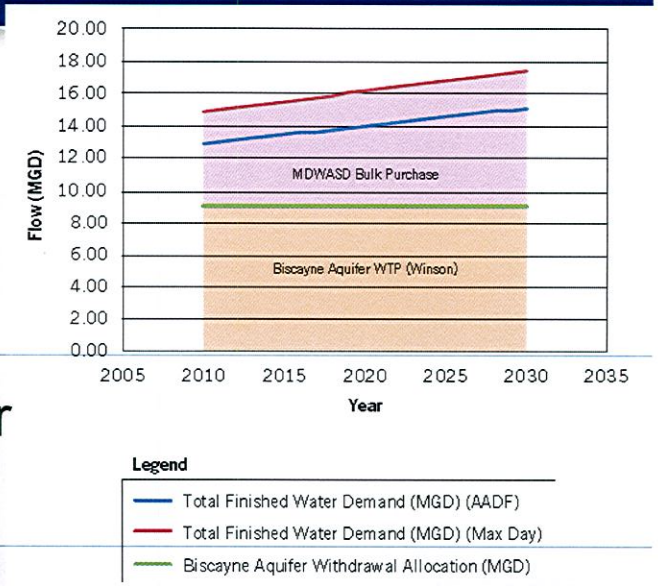

Task 1 Water System Alternatives Analysis

Table 1.11
Opinion of Probable Costs for Improvements

Alternative	Description	Capital Cost	O&M Costs from 2011 to 2025	Total Present Worth
Near-term Improvements		$5,609,000	N/A	$5,609,000
2025 Improvement Alternatives				
Alternative 1	Long-Term Improvements Alternative No.1 – Winson WTP with Tank	$109,579,000	$51,228,000	$160,807,000
Alternative 2A	Long-Term Improvements - Alternative No.2A – Winson WTP, MDWASD Interconnects with No Tank	$593,000	$54,844,000	$55,437,000
Alternative 2B	Long-Term Improvements Alternative No.2B – Winson WTP, MDWASD Interconnects with Tank	$8,203,000	$54,844,000	$63,047,000
Alternative 3	Alternative No.3 Improvements for Water Age Scenario – Winson WTP, North Miami Beach Interconnects with Tank	$19,703,000	$58,383,000	$78,086,000

HAZEN AND SAWYER
Environmental Engineers & Scientists

Work involved in upgrading the Winson Water Plant

- ✔ Task 2 Plant and Well Site Surveys
- ✔ Task 3 Lime Sludge Disposal Alternatives Analysis

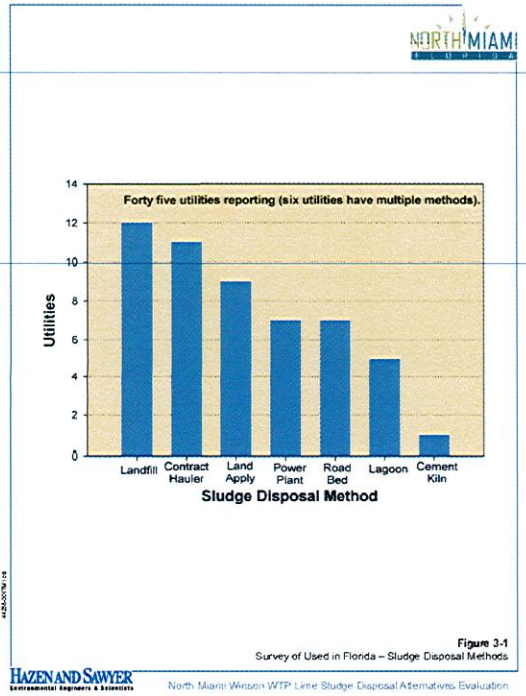

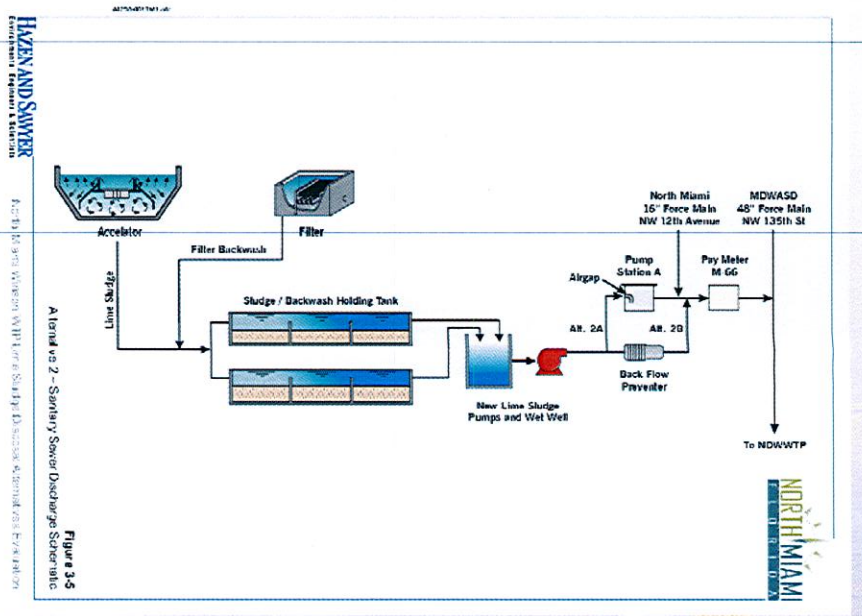

HAZEN AND SAWYER
Environmental Engineers & Scientists

Work involved in upgrading the Winson Water Plant

- Task 4 Plant Upgrade Design – in progress
  - ✔ Bid Package 1 – Filter Rehab
    - Expedited for SRF Funding
    - Bid July 31,2012
    - Pending Award
  - Bid Package 2 – Not Used
  - Bid Package 3 – Water Plant Improvements
    - BODR Nearing Completion
    - Drawings and Specs 50% Complete
    - Bid Anticipated June 2013

HAZEN AND SAWYER
Environmental Engineers & Scientists

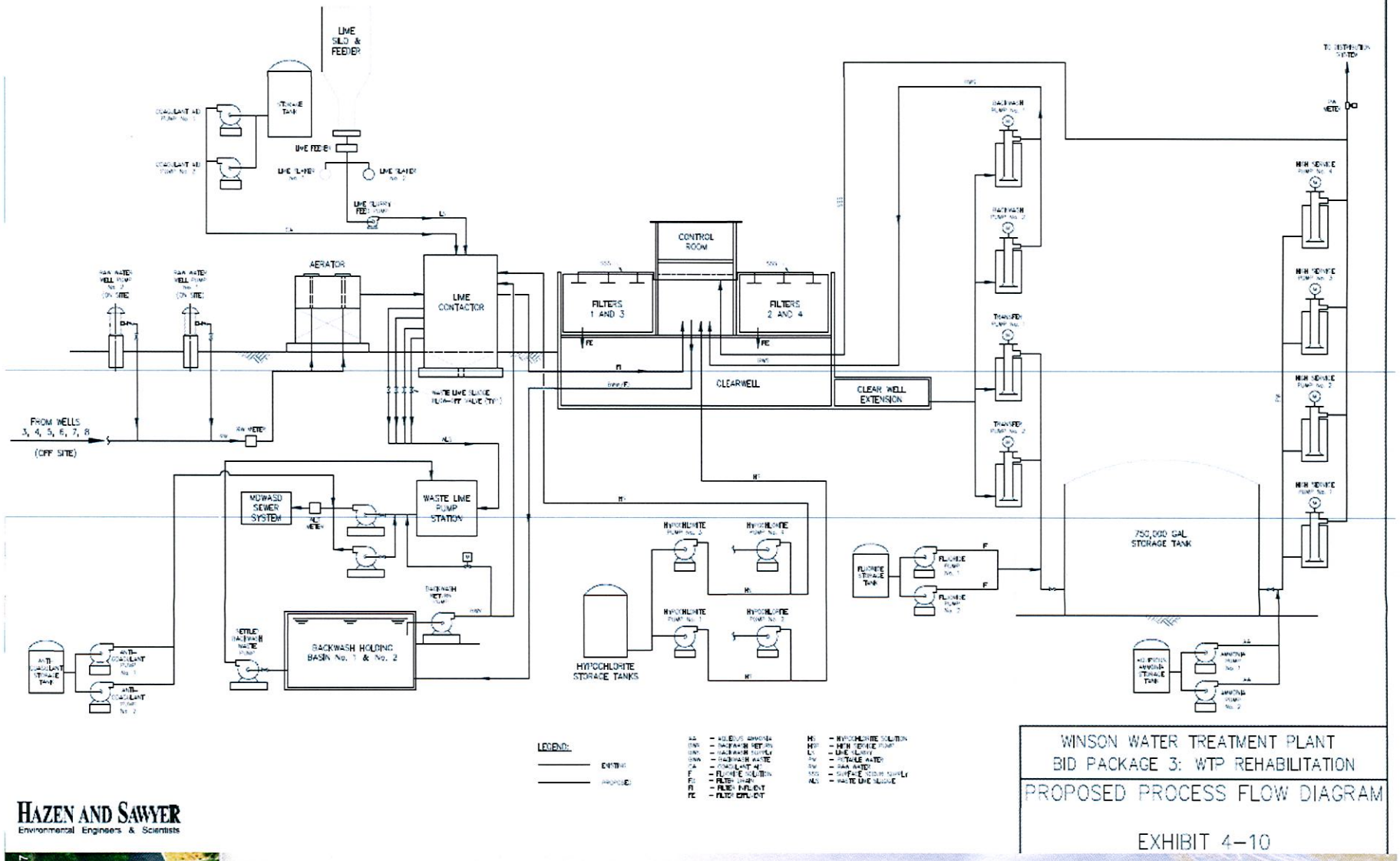

WINSON WATER TREATMENT PLANT
BID PACKAGE 3: WTP REHABILITATION

PROPOSED PROCESS FLOW DIAGRAM

EXHIBIT 4-10

HAZEN AND SAWYER
Environmental Engineers & Scientists

HAZEN AND SAWYER
Environmental Engineers & Scientists

NORTH MIAMI
FLORIDA

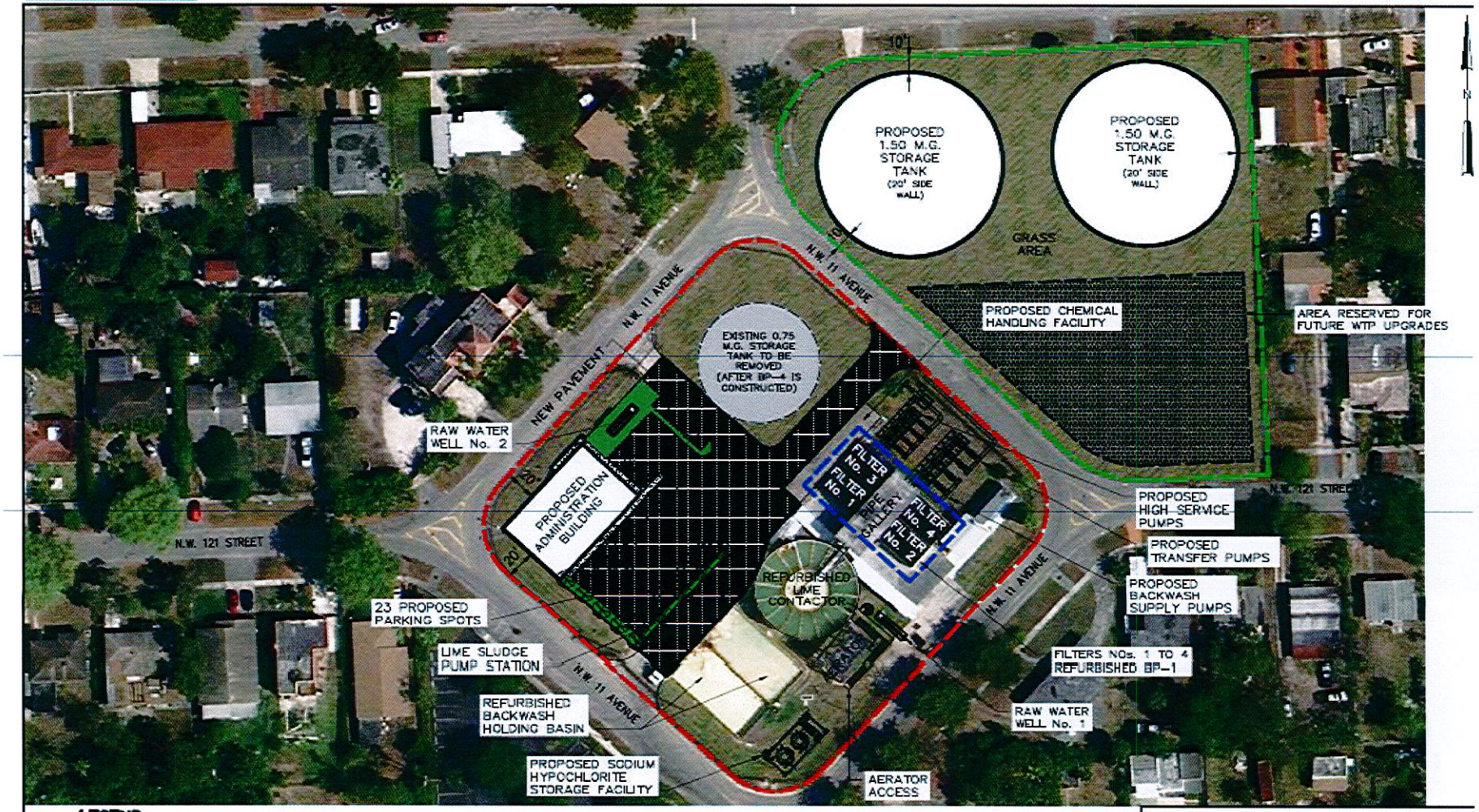

LEGEND:

- BP-1: FILTER REHABILITATION PROJECT.
- BP-3: WTP REHABILITATION PROJECT (INCLUDES BP-2: ON-SITE RAW WATER SYSTEM IMPROVEMENTS).
- BP-4: WATERSTORAGE TANKS PROJECT.

HAZEN AND SAWYER
Environmental Engineers & Scientists

1"=60'-0" 60 30 0 60'

WINSON WATER TREATMENT PLANT

REVISED PLANT LAYOUT

NORTH MIAMI
FLORIDA

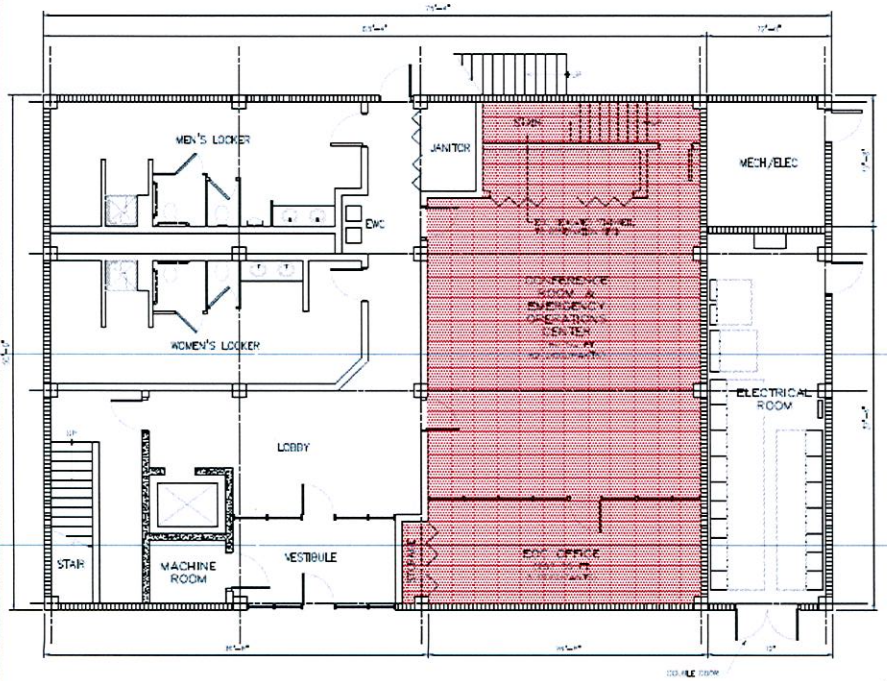

FIRST FLOOR PLAN

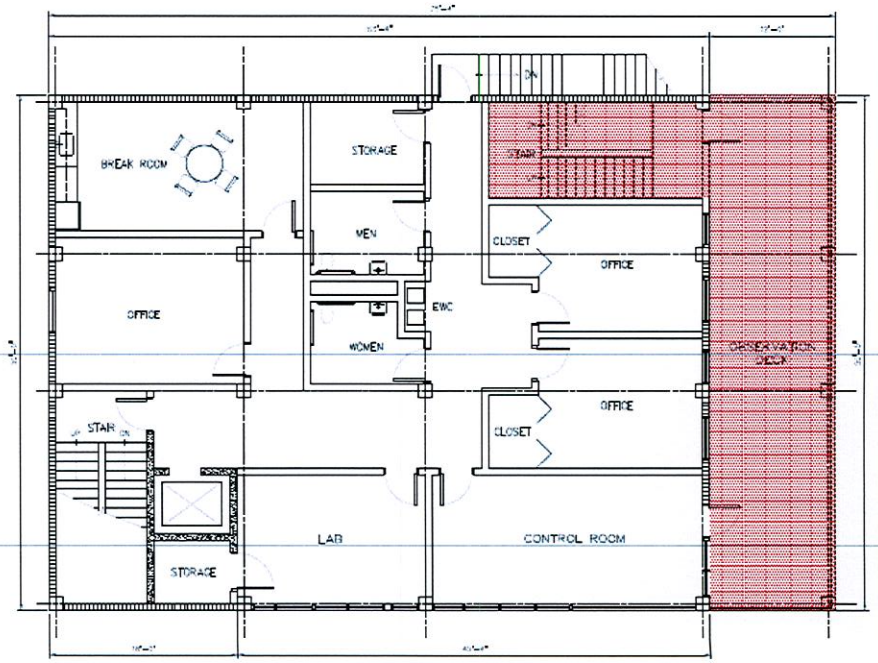

SECOND FLOOR PLAN

SECURE EOC AREA

HAZEN AND SAWYER
Environmental Engineers & Scientists

WINSON WATER TREATMENT PLANT

PROPOSED ADMINISTRATION BUILDING FLOOR PLANS

HAZEN AND SAWYER
Environmental Engineers & Scientists

Work involved in upgrading the Winson Water Plant

- Task 4 Plant Upgrade Design – in progress (Continued)
  - Bid Package 4 – New Ground Storage Tanks
    - Pending Site Availability
    - Bid Anticipated November 2013

HAZEN AND SAWYER
Environmental Engineers & Scientists

Work involved in upgrading the Winson Water Plant

- Task 5 Offsite Well Rehab – in progress
  - Expedited for SRF Funding
  - Bid July 31,2012
  - Pending Award

HAZEN AND SAWYER
Environmental Engineers & Scientists

Work involved in upgrading the Winson Water Plant

- Task 6 Construction Phase Services
  - Bid Package 1 – Filter Rehab
  - Bid Package 2 – Not Used
  - Bid Package 3 – Water Plant Improvements
  - Bid Package 4 – New Ground Storage Tanks
  - Well Rehabilitation Bid Pack
- Task 7 Offsite Raw Water Pipelines Design and Construction Phase Services

HAZEN AND SAWYER
Environmental Engineers & Scientists

Total Program Estimated Capital Cost

Bid Package	Estimated Capital Cost
1 – Filter Rehab	$3,676,000
3 – Water Plant Improvements	$11,237,000
4 – New Ground Storage Tanks	$1,950,000
5 – Offsite Raw Water Lines and Well Heads	$945,000
Offsite Well Rehabilitation	$180,000
Total	$17,988,000

Total Program Anticipated Schedule

Bid Package	Construction
1 – Filter Rehab	January 2013 to October 2013
3 – Water Plant Improvements	September 2013 to August 2014
4 – New Ground Storage Tanks	January 2014 to June 2014
5 – Offsite Raw Water Lines and Well Heads	August 2013 to May 2014
Well Rehabilitation	January 2013 to May 2013

HAZEN AND SAWYER
Environmental Engineers & Scientists