NORTH MIAMI
FLORIDA
776 N.E. 125 Street, North Miami, Florida 33161

Council Report

To: The Honorable Mayor and Council Members

From: Wisler Pierre-Louis, P.E., Public Works Director

Date: October 14th, 2014

RE: **A RESOLUTION OF THE VICE MAYOR AS ACTING MAYOR AND CITY COUNCIL OF THE CITY OF NORTH MIAMI, FLORIDA, APPROVING THE SELECTION OF LIMOUSINES OF SOUTH FLORIDA, INC., FOR THE OPERATION AND MAINTENANCE OF CITYWIDE PUBLIC TRANSPORTATION SERVICES, IN ACCORDANCE WITH THE TERMS, CONDITIONS AND SPECIFICATIONS OF THE REQUEST FOR PROPOSALS NO. 48-12-13 COMMUNITY TRANSPORTATION SERVICES, AT A COST NOT TO EXCEED SIX HUNDRED THOUSAND DOLLARS ($600,000.00) PER YEAR; FURTHER AUTHORIZING THE CITY MANAGER AND CITY ATTORNEY TO NEGOTIATE AND EXECUTE A NON-EXCLUSIVE AGREEMENT FOR THE PROVISION OF THE STATED SERVICES, FOR A TERM OF THREE (3) YEARS WITH TWO (2) OPTIONS TO RENEW THE AGREEMENT, FOR A ONE (1) YEAR PERIOD; PROVIDING FOR AN EFFECTIVE DATE AND FOR ALL OTHER PURPOSES.**

RECOMMENDATION

Staff is requesting that the Vice Mayor as Acting Mayor and City Council of the City of North Miami, Florida, hereby approve the selection of Limousines of South Florida, Inc., for the operation and maintenance of citywide public transportation services, in accordance with the terms, conditions and specifications of the Request for Proposals No. 48-12-13 Community Transportation Services, at a cost not to exceed Six Hundred Thousand Dollars ($600,000.00) per year.

BACKGROUND

On September 16, 2013, the City administration prepared and advertised Request for Proposals No. 48-12-13 Community Transportation Services ("RFP"), seeking qualified and experienced

transportation companies to operate and maintain a public transportation system throughout the City ("Services"), and thereby implementing the adopted Transit Circulator Plan.

Staff recommends selection of Limousines of South Florida, Inc. ("Contractor"), timely submitted its bid and was evaluated by City administration as the lowest responsive-responsible bidder whose bid, qualifications and references demonstrated to be the most advantageous to the City in the procurement of the Service.

Limousines of South Florida (LSF) is currently contracted by the City to run the NOMI Express, the City's free shuttle service. Since 2007, they have operated 4 shuttles per day for up to 15 hours per day and the NOMI School Special that operates 4 hours per day. The service does not run on weekends or City observed holidays. The cost based on the 2007 contract is $44.60 per hour, or approximately $56,000 per month (each month is different based on City holidays, school holidays and number of days in the month). LSF has provided good service during the past 7 years and requirements have been added to the new scope of work to ensure better service going forward. This includes GPS enabled transmitters so that Staff and riders will be able to track where the buses are and if they are on time.

Summary of Services and Costs

ROUTE	Summary	Proposed Services	Cost
Green Route	Primarily serves west side of City. Stops include Gratigny Elementary, Sunkist Grove, Pepper Park, and several stops on NW 7th Ave and NW 119th ST In 2013-2014, **135,000** passengers per year	Mon-Fri 7am to 7 pm	12 hrs per day * $47.20 per hour = $566.40 per day $566.40 per day * 251 days = $142,166.40 per bus $142,166.40 * 3 buses = **$426,499.20 per year**
Orange Route	Serves central-west part of the City. Stops at Publix on NE 6th Avenue, North Miami High School, Middle School, and Elementary School In 2013-2014 **111,000** passengers per year	Mon-Fri 7am to 7 pm	
Blue Route	Serves the central-east part of the City. Stops at North Miami High School, Publix on NE 6th Ave and Target. Connects with Red Route at the Publix on Biscayne/127 In 2013/2014, **109,000** passengers per year	Mon-Fri 7am to 7 pm	
Red Route	Serves the east side of the City. Stops include Sans Souci Blvd, Publix on Biscayne/127th ST, Target, Costco, Alonzo Mourning HS, FIU In 2013/2014, **72,000** passengers per year	Mon-Fri 7 am to 2 pm	7 hrs per day * $47.20 per hour = $330.40 per day $330.40 per day * 251 days = **$82,930.40 per year**
School Special	Runs at peak hours mostly for students at Alonzo Mourning High School and David K Lawrence K-8. In 2013/2014, **24,000** riders per year (4 hrs/day)	School days 2 pm to 4 pm	2 hrs per day * $47.20 per hour = $94.40 per day $94.40 per day * 190 days = **$17,936 per year**

NOMI
express
NOMI SPECIAL
2 PM to 4 PM
School Days
ATM High School
NE 151 ST
W Dixie Hwy
NE 16 AVE
Biscayne Blvd
NE 123 ST
1 Griffing Center/Park
3 Gratigny Elementary
11 Oleander Park
12 Sunkist Grove Community Center
13 Thomas Sasso Pool
15 Ben Franklin Elementry & Park
16 Joe Celestin Center
17 Claude Pepper Park
19 7th Avenue Flea Market
1 Griffing Center/Park
2 President Supermarket
3 Publix
5 North Miami Middle School
6 Library/North Miami Middle School
7 St. Paul's Church
10 First Church of North Miami
12 Enchanted Forest Park
15 Target/Post Office
18 Navarro
19 Publix
20 Johnson & Wales University
25 William Jennings Bryan Elementary
27 City Hall/MOCA/Police
1 Griffing Center/Park
10 North Miami Middle/Arch Creek Elem.
12 North Miami Elementary
19 North Miami Senior High
21 City Hall/MOCA Plaza/Police
23 Publix
27 President Supermarket
1 Publix
2 Johnson & Wales University
4 Gwen Margolis Center/ Wholefoods
5 Walgreens
6 Besade Park/Tennis Center at Sans Souci
16 Target/Post Office
17 Costco/Publix
21 Alonzo & Tracy Mourning High School
20 Florida International University Library
24 Natural Bridge Elementary
26 Enchanted Forest Park
NE 145 ST
NE 10 AVE
NE 8 AVE
NE 140 ST
W DIXIE HWY
NE 139 ST
NE 143 ST
NE 18 AVE
NE 146 ST
NE 16 AVE
BISCAYNE BLVD
NE 151 ST
BAY VISTA BLVD
NE 145 ST
NE 6 AVE
135 ST
NE 135 ST
NE 135 ST
NW 135 ST
NW 131 ST
NE 131 ST
NW 131 ST
NW 7 AVE
NW 11 AVE
NW 2 AVE
N MIAMI AVE
MEMORIAL HWY
NE 10 AVE
NE 12 AVE
NE 14 AVE
NE 16 AVE
NE 127 ST
NE 127 ST
NW 125 ST
NE 125 ST
NE 124 ST
NE 123 ST
NE 123 ST
NE 2 AVE
NW 7 AVE
NW 119 ST
119 ST
W DIXIE HWY
GRIFFING BLVD
NE 8 AVE
NE 115 ST
NE 113 ST
BISCAYNE BLVD
SANS SOUCI BLVD
BISCAYNE BAY
N
Interstate 95

Minutes after the hour

#	ORANGE ROUTE (2)	TIME
1	12220 Griffing BLVD - *Griffing Center*	:05
2	125 ST & NE 2 AVE - *Breezeswept Tot-Lot*	:07
3	125 ST & N Miami Ave	:09
4	NW 2 AVE & 125 ST	:10
5	NW 2 AVE & NW 128 ST	:12
6	NW 2 AVE & NW 135 ST	:13
7	135 ST & N Miami AVE	:14
8	135 ST & Memorial Highway	:16
9	NE 135 ST & NE 5 AVE	:18
10	NE 6 AVE & 136 ST - *NM Middle/Arch Creek Elem.*	:20
11	NE 6 AVE & 140 ST	:22
12	NE 6 AVE & NE 145 ST - *NM Elementary*	:24
13	NE 10 AVE & 145 ST	:26
14	NE 10 AVE & 140 ST	:28
15	NE 12 AVE & NE 140 ST	:30
16	W Dixie HWY & NE 11 AVE	:31
17	W Dixie HWY & 136 ST - *Swift Laundry*	:32
18	NE 135 ST & NE 9 AVE	:34
19	NE 8 AVE & NE 133 ST - *Library/NM Senior HS*	:35
20	NE 8 AVE & 129 ST	:38
21	NE 8 AVE & NE 125 ST - *City Hall*	:40
22	NE 7 AVE & NE 127 ST	:44
23	NE 6 AVE & 128 ST - *Publix*	:45
24	131 ST & NE 5 AVE	:47
25	131 ST & Griffing BLVD	:49
26	NE 125 ST & Griffing BLVD	:51
27	125 ST & NE 4 CT	:53
28	NE 6 AVE & NE 124 ST	:55

7 am to 7 pm Monday-Friday

Minutes after the hour

#	RED ROUTE (4)	TIME
1	Biscayne BLVD & NE 128 ST - *Publix*	:05
2	NE 128 ST & 17 AVE - *Johnson & Wales*	:06
3	NE 16 AVE & 125 ST	:07
4	NE 123 ST & 16 AVE + *Whole Foods*	:08
5	NE 123 ST & NE 18 AVE - *near Walgreens*	:10
6	Sans Souci Blvd & 18 AVE - *Tennis Center*	:12
7	Sans Souci BLVD & NE 121 ST	:20
8	123 ST & NE 18 AVE	:21
9	Biscayne BLVD & 128 ST	:22
10	Biscayne BLVD & NE 131 ST	:23
11	Biscayne BLVD & NE 135 ST - *SE Corner*	:24
12	NE 135 ST & NE 20 AVE	:21
13	NE 135 ST & NE 25 AVE	:23
14	NE 135 ST & 24 CT	.25
15	Biscayne BLVD & NE 135 ST - *NE Corner*	:26
16	Biscayne & 140 ST - *Target/Post Office*	:28
17	Biscayne BLVD & NE 145 ST - *Publix*	:30
18	NE 151 ST & Biscayne Blvd	:32
19	*David K. Lawrence K-8 School*	:34
20	Florida International University - *Library*	:40
21	Alonzo & Tracy Mourning High School	:42
22	Biscayne BLVD *southbound near Total Wine*	:46
23	146 ST & NE 18 AVE	:47
24	NE 16 AVE & 143 ST	:48
25	NE 16 AVE & 139 ST	:49
26	135 ST & NE 16 ST - *Enchanted Forest Park*	:50
27	Biscayne BLVD & NE 135 ST	:52
28	Biscayne BLVD & 130 ST	:54

7 am to 2 pm Monday-Friday

TIME	Times are minutes after the hour
:05	*Minutos después de la hora*
:06	Minit aprè lè a èdtan
:07	:07 means the bus will come at
:08	**7:07, 8:07, 9:07... 12:07, 1:07 etc.**

EFFECTIVE: October 1, 2014

GREEN	ORANGE	BLUE
MONDAY - FRIDAY 7 AM to 7 PM		

RED
MONDAY - FRIDAY 7 AM to 2 PM

NOMI SPECIAL
School Days 2 PM to 4 PM

Buses do not run on weekends or City observed holidays

No hay servicio de autobuses los fines de semana o los días feriados oficiales de la ciudad

Otobis yo pa opere pandan wikenn ak jou konje Vil la

New Year's Day (December/January)
Dr. Martin Luther King Day (January)
Presidents' Day (February)
Memorial Day (May)
Independence Day (July)
Labor Day (September)
Veterans Day (November)
Thanksgiving (November)
Christmas (December)

Bicycle Racks Available

Wheelchair Accessible

To contact the City
Para comunicarse con la ciudad
Pou kontakte vil la
305-895-9883
transportation@northmiamifl.gov

Customer service:
Número de atención al cliente
Nimewo sèvis kliyantèl
305-947-9995

northmiamifl.gov/nomibus

EFFECTIVE: October 1, 2014

NOMI express

North Miami's FREE BUS

MAP & SCHEDULE

***Mapa y horario* • Plan & Orè**

NORTH MIAMI FLORIDA

Minutes after the hour

#	GREEN ROUTE (1)	TIME
1	12220 Griffing BLVD - *Griffing Center*	:05
2	W Dixie Hwy & NE 119th ST	:06
3	119 ST & N Miami AVE -*Gratigny Elementary*	:08
4	NW 2nd AVE & NW 119 ST	:09
5	NW 2 AVE & 125 ST	:10
6	125 ST & NW 4 AVE	:11
7	NW 7 AVE & 125 ST	:15
8	NW 7 AVE & 120 ST	:16
9	NW 119 ST & NW 10 AVE	:18
10	NW 119 ST & 12 AVE	:20
11	NW 13 AVE & 121 ST - *Oleander Park*	:22
12	NW 13 AVE & 125 ST - *Sunkist Grove Center*	:24
13	NW 11 AVE & 125 ST - *Thomas Sasso Pool*	:25
14	NW 11 Avenue & 131 Street	:28
15	NW 131 ST & 13 AVE - *Ben Franklin*	:30
16	NW 135 & 12 AVE - *Joe Celestin Center*	:34
17	135 ST & NW 12 AVE - *Claude Pepper Park*	:33
18	135 ST & NW 7 AVE	:35
19	NW 7 AVE & 139 ST - *Flea Market*	:38
20	NW 7 AVE & 135 ST - *Southbound*	:40
21	131 ST & NW 6 AVE	:42
22	131 ST & NW 2 AVE	:44
23	135 ST & N Miami AVE	:45
24	NE 135 ST & Memorial Hwy	:48
25	135 ST & NE 6 AVE	:50
26	NE 6 AVE & 133 ST	:52
27	NE 6 AVE & 128 ST - *Across from Publix*	.54
28	NE 6 AVE & 124 Street	:56

7 am to 7 pm Monday-Friday

Minutes after the hour

#	BLUE ROUTE (3)	TIME
1	12220 Griffing BLVD - *Griffing Center*	:05
2	125 ST & NE 4 CT - *near President Supermarket*	:07
3	NE 6 AVE & 128 ST - *near Publix*	:11
4	NE 6 AVE & 135 ST - *Holy Cross Church*	:12
5	NE 135 ST & NE 7 AVE - *NM Middle School*	:13
6	NE 8 AVE & 133 ST - *North Miami Library*	:15
7	W Dixie HWY & NE 132 ST - *Shalom Church*	:16
8	W Dixie HWY & NE 135 ST	:18
9	W Dixie HWY & 139 ST	:19
10	NE 135 ST & NE 12 AVE - *First Church of NM*	:21
11	NE 135 ST & 134 Rd	:22
12	NE 135 ST & NE 16 AVE - *Enchanted Forest Park*	:23
13	NE 135 & Arch Creek Rd	:24
14	Biscayne BLVD & 135 ST	:26
15	Biscayne BLVD & 140 ST - *Target*	:30
16	Biscayne BLVD & 137 ST	:32
17	Biscayne BLVD & NE 135 ST *Southbound*	:34
18	Biscayne BLVD & NE 130 ST - *Navarro*	:35
19	Biscayne BLVD & NE 128 ST - *Publix*	:37
20	NE 128 ST & NE 17 AVE - *Johnson & Wales*	:40
21	NE 16 AVE & 125 ST	:44
22	NE 123 ST & 16 AVE - *Gwen Margolis Center*	:45
23	NE 123 ST & 14 AVE - *Three Horizons Condo*	:46
24	125 ST & NE 13 AVE	:48
25	NE 125 ST & 12 AVE- *WJB Elementary*	:49
26	NE 125 ST & 10 AVE	:50
27	NE 8 AVE & 125 ST - *City Hall*	:52

7 am to 7 pm Monday-Friday

RESOLUTION NO. _____

A RESOLUTION OF THE VICE MAYOR AS ACTING MAYOR AND CITY COUNCIL OF THE CITY OF NORTH MIAMI, FLORIDA, APPROVING THE SELECTION OF LIMOUSINES OF SOUTH FLORIDA, INC., FOR THE OPERATION AND MAINTENANCE OF CITYWIDE PUBLIC TRANSPORTATION SERVICES, IN ACCORDANCE WITH THE TERMS, CONDITIONS, AND SPECIFICATIONS CONTAINED IN THE REQUEST FOR PROPOSAL NO. 48-12-13 COMMUNITY TRANSPORTATION SERVICES, AT A COST NOT TO EXCEED SIX HUNDRED THOUSAND DOLLARS ($600,000.00) PER YEAR; FURTHER AUTHORIZING THE CITY MANAGER AND CITY ATTORNEY TO NEGOTIATE AND EXECUTE A NON-EXCLUSIVE AGREEMENT FOR THE PROVISION OF STATED SERVICES, FOR A TERM OF THREE (3) YEARS WITH TWO (2) OPTIONS TO RENEW THE AGREEMENT, FOR A ONE (1) YEAR PERIOD EACH; PROVIDING FOR AN EFFECTIVE DATE AND FOR ALL OTHER PURPOSES.

WHEREAS, on January 14, 2003, the Mayor and City Council of the City of North Miami ("City") passed Resolution Number 2003-1, adopting a Transit Circulator Plan for the benefit of commuting City residents; and

WHEREAS, on September 16, 2013, the City administration prepared and advertised ***Request for Proposals No. 48-12-13 Community Transportation Services*** ("RFP"), seeking qualified, insured and experienced transportation companies to operate and maintain a public transportation system throughout the City ("Services"), and thereby implementing and effectuating the adopted Transit Circulator Plan; and

WHEREAS, in response to the RFP, Limousines of South Florida, Inc. ("Contractor") timely submitted its proposal and was evaluated by City administration as a responsive, responsible Service provider whose proposal, qualifications and references demonstrated to be the most advantageous to the City; and

WHEREAS, City administration respectfully requests that the Vice Mayor as Acting Mayor and City Council approve the selection of Contractor, and authorize the City Manager and City Attorney to negotiate and execute an agreement for the provision of Services for the benefit of commuting members of the public; and

WHEREAS, the Vice Mayor as Acting Mayor and City Council, find that entering into an agreement with Contractor for the provision of Services, is advantageous to the public health, safety and welfare, and thereby, is in the best interest of the City.

NOW THEREFORE, BE IT RESOLVED BY THE VICE MAYOR AS ACTING MAYOR AND CITY COUNCIL OF THE CITY OF NORTH MIAMI, FLORIDA:

Section 1. **Selection Approval.** The Vice Mayor as Acting Mayor and City Council of the City of North Miami, Florida, hereby approve the selection of Limousines of South Florida, Inc., for the operation and maintenance of citywide public transportation services, in accordance with the terms, conditions, and specifications contained in the *Request for Proposal No. 48-12-13 Community Transportation Services*, at a cost not to exceed Six Hundred Thousand Dollars ($600,000.00) per year.

Section 2. **Authority of City Manager and City Attorney.** The Vice Mayor as Acting Mayor and City Council of the City of North Miami, Florida, hereby authorize the City Manager and City Attorney to negotiate and execute a non-exclusive agreement for the provision of stated services, for a term of three (3) years with two (2) options to renew the agreement, for a one (1) year period each.

Section 3. **Effective Date.** This Resolution shall become effective immediately upon adoption.

PASSED AND ADOPTED by a _____ vote of the Vice Mayor as acting Mayor and City Council of the City of North Miami, Florida, this _____ day of October, 2014.

_____
PHILIPPE BIEN-AIME
VICE MAYOR AS ACTING MAYOR

ATTEST:

_____
MICHAEL A. ETIENNE, ESQ.
CITY CLERK

APPROVED AS TO FORM
AND LEGAL SUFFICIENCY:

_____
REGINE M. MONESTIME
CITY ATTORNEY

SPONSORED BY: CITY ADMINISTRATION

Moved by: _____

Seconded by: _____

Vote:

Vice Mayor as Acting Mayor Philippe Bien-Aime	_____ (Yes)	_____ (No)
Councilperson Scott Galvin	_____ (Yes)	_____ (No)
Councilperson Carol Keys, Esq.	_____ (Yes)	_____ (No)
Councilperson Marie Erlande Steril	_____ (Yes)	_____ (No)

FLORIDA DEPARTMENT OF STATE
DIVISION OF CORPORATIONS

Detail by Entity Name

Florida Profit Corporation

LIMOUSINES OF SOUTH FLORIDA, INC.

Filing Information

Document Number	M11337
FEI/EIN Number	592564092
Date Filed	02/14/1985
State	FL
Status	ACTIVE
Last Event	REINSTATEMENT
Event Date Filed	10/02/2014
Event Effective Date	NONE

Principal Address

2766 NW 62 STREET
MIAMI, FL 33147

Changed: 12/26/2013

Mailing Address

2766 NW 62 STREET
MIAMI, FL 33147

Changed: 12/26/2013

Registered Agent Name & Address

GONZALEZ, RENE
2766 NW 62 STREET
MIAMI, FL 33147

Name Changed: 12/26/2013

Address Changed: 12/26/2013

Officer/Director Detail

Name & Address

Title PSEC

GONZALEZ, RAYMOND
2766 NW 62 STREET
MIAMI, FL 33147

Title VPTR

GONZALEZ, RENE
2766 NW 62 STREET
MIAMI, FL 33147

Annual Reports

Report Year	Filed Date
2012	05/16/2012
2013	04/29/2013
2014	10/02/2014

Document Images

10/02/2014 -- REINSTATEMENT	View image in PDF format
12/26/2013 -- Amendment	View image in PDF format
04/29/2013 -- ANNUAL REPORT	View image in PDF format
05/16/2012 -- ANNUAL REPORT	View image in PDF format
04/12/2012 -- ANNUAL REPORT	View image in PDF format
02/16/2011 -- ANNUAL REPORT	View image in PDF format
12/21/2010 -- ANNUAL REPORT	View image in PDF format
10/20/2010 -- ANNUAL REPORT	View image in PDF format
03/19/2010 -- ANNUAL REPORT	View image in PDF format
12/15/2009 -- ANNUAL REPORT	View image in PDF format
03/12/2009 -- ANNUAL REPORT	View image in PDF format
03/12/2009 -- Reg. Agent Change	View image in PDF format
03/09/2009 -- ANNUAL REPORT	View image in PDF format
04/21/2008 -- ANNUAL REPORT	View image in PDF format
04/09/2007 -- ANNUAL REPORT	View image in PDF format
04/25/2006 -- ANNUAL REPORT	View image in PDF format
02/10/2005 -- ANNUAL REPORT	View image in PDF format
02/20/2004 -- ANNUAL REPORT	View image in PDF format
04/18/2003 -- ANNUAL REPORT	View image in PDF format
05/06/2002 -- ANNUAL REPORT	View image in PDF format
05/10/2001 -- ANNUAL REPORT	View image in PDF format
05/18/2000 -- ANNUAL REPORT	View image in PDF format
08/16/1999 -- ANNUAL REPORT	View image in PDF format

05/14/1998 -- ANNUAL REPORT	View image in PDF format
04/25/1997 -- ANNUAL REPORT	View image in PDF format
07/03/1996 -- ANNUAL REPORT	View image in PDF format
05/01/1995 -- ANNUAL REPORT	View image in PDF format

Annual Cost			**$527,365.60**

The cost not to exceed of $600,000 in the agreement is there in case the City decides to add hours or routes to the service based on ridership needs. The cost per revenue hour, however, is fixed.

FUNDING SOURCE

Funding for this service is through Half-Cent Transportation Surtax.

ATTACHMENT(S)

Resolution
Proposal
Tabulation

RFP 48-12-13
Community Transportation Services
Opening Date: October 8, 2013

		Form A-1	Form -2	Form A-3	Form A-4	Form A-5	Form A-6	Form A-14		
Vendor Name	**Registered in the State of Florida**	**Public Entity Crimes Affidavit**	**Non-Collusive Bidder Cert.**	**Local Preference Forms**	**Questionnaire**	**Acknowledgment of Addenda**	**Bid Bond**	**References**	**Insurance Requirements**	**Responsiveness**
	Yes / No	Yes / No	Yes / No	Yes / No	Yes / No	Yes / No	Yes / No	Yes / No	Yes / No	
*Admiral Limosuine	YES	No	No	No	No	No	YES	YES	YES	Non-Responsive
Limousines of South Florida, Inc	YES	YES	YES	YES	YES	YES	YES	YES	YES	Responsive

*Admiral Limousine was deemed as non responsive due to not provide the required forms A-1 thru A-5

FLORIDA DEPARTMENT OF STATE
DIVISION OF CORPORATIONS

Detail by FEI/EIN Number

Florida Profit Corporation

LIMOUSINES OF SOUTH FLORIDA, INC.

Filing Information

Document Number	M11337
FEI/EIN Number	592564092
Date Filed	02/14/1985
State	FL
Status	ACTIVE
Last Event	AMENDMENT
Event Date Filed	12/26/2013
Event Effective Date	NONE

Principal Address

2766 NW 62 STREET
MIAMI, FL 33147

Changed: 12/26/2013

Mailing Address

2766 NW 62 STREET
MIAMI, FL 33147

Changed: 12/26/2013

Registered Agent Name & Address

GONZALEZ, RENE
2766 NW 62 STREET
MIAMI, FL 33147

Name Changed: 12/26/2013

Address Changed: 12/26/2013

Officer/Director Detail

Name & Address

Title PSEC

GONZALEZ, RAYMOND
2766 NW 62 STREET
MIAMI, FL 33147

PROPOSAL SUBMITTAL CHECKLIST

RFP 42-12-13
COMMUNITY TRANSPORTATION SERVICES

This checklist is provided for Proposer's convenience only and identifies the sections of this submittal document to be completed and submitted with each response. Any Proposal received without any one or more of these sections may be rejected as being non-responsive. Please be advised that this checklist may not necessarily complete include all of the requirements listed throughout this Solicitation. It sets guidelines for consideration, and may be added to as the need arises.

Company Name: Limousines of South Florida, Inc

Tab/Page No.		OFFICE USE ONLY
Tab 1 p. 3	Cover Page and Contact Person Information Sheet	
Tab 2 p. 4	Business Structure	
separate sealed envelope	Balance Sheets and Income Statement	
Tab 3 p.5	Firms Qualification & Experience	
Tab 4 p. 7	Team Experience	
Tab 5 p. 30	Methodology & Approach	
Tab 7 p. 47	Price Proposal	
Tab/Page No.		**OFFICE USE ONLY**
Tab 8 p. 50	A-1 Public Entity Crimes Affidavit	
Tab 8 p. 52	A-2 Non- Collusive Proposal Certificate	
Tab 6 p. 47	A-3 Local Preference Certification	
Tab 8 p. 54	A-4 Questionnaire	
Tab 8 p. 60	A-5 Acknowledgement of Addenda	
Tab 8 p. 61	A-6 Disclosure of Subcontractors & Suppliers	
Tab 2 p. 4c	A-7 Insurance Requirements	
Tab 2 p. 4e	A-9 Bid Bond	
Tab 8 p. 67	A-14 References	

FOR PURCHASING OFFICE USE ONLY

☐ Responsive ☐ Non-Responsive ☐ Other: _____

Comment: _____

1. PROPOSAL CONTACT PERSON INFORMATION 3

2. BUSINESS STRUCTURE 4

3. FIRM PAST EXPERIENCE 5

LSF SHUTTLE EXPERIENCE 5
LSF Shuttle References 5

4. TEAM EXPERIENCE 7

Mike Rosson: Project Manager 7
Jackie Castillo: Operations Manager 7
Albert Delgado: Maintenance Manager 7
Frontline Employee Experience 8
Corporate and Regional Resources 8
Corporate Support 9
MANAGEMENT PLAN 10
Operations Supervisor and Dispatchers 10
Project Management 11
Operator Staffing 11
CandidateCare Workforce Development Program 11
Hiring Standards 12
Pre-Employment Drug Testing 13
Ongoing Monitoring of Credentials 13
Employee Retention 13
Human Resources Compliance 14
Harassment Policy 15
Employee Handbook 15
TRAINING PROGRAMS 16
Employee Training Program Objectives 16
Training Program Overview 16
Training Program Overview 19
Customer Service Training 23
ADA/Passenger Sensitivity Training 25
Training Methodology 25
Continuous Training 26
Refresher Training 26
Corrective Re-Training 27
Certification Training 27
Dispatch and Call Center Training 27
Maintenance Training 28

5. METHODOLOGY, TRANSITION AND APPROACH TO THE PROJECT 30

PROJECT UNDERSTANDING 30
TRANSITION 30
FIRM FACILITY LOCATION 30
VEHICLE DESCRIPTION 30

Vehicle Maintenance Program *31*
Vehicle Washing *34*
REPORTING AND COMMUNICATIONS 34
Key Performance Indicator (KPI) Reporting *36*
BUS TECHNOLOGIES AND INNOVATIVE GREEN TECHNOLOGIES 36
Community Involvement *37*
ADDITIONAL INFORMATION 38
Customer Comment Resolution *39*
Stop Announcements *39*
Supervision *39*
ADA Compliance *40*
Vehicle Dispatching *40*
24/7 Contacts *40*
Delays and Cancellations *40*
Accident and Incident Procedures *40*
Safety Program *41*
Drug and Alcohol Testing *45*
Regulatory Compliance *45*

6. LOCAL BUSINESS PREFERENCE 46

7. PRICE PROPOSAL 47

8. CONTRACT FORMS 48

APPENDIX
KEY PERSONNEL RESUMES ..... A
EMPLOYEE HANDBOOK ..... B
DRUG AND ALCOHOL TESTING POLICY C

1. Proposal Contact Person Information

NORTH MIAMI
FLORIDA

CITY OF NORTH MIAMI

PROPOSAL CONTACT PERSON INFORMATION

RFP 48-12-13
Community Transportation Services

Include this sheet as the very first sheet of your Proposal. Please complete the form in its entirety. The contact person indicated should be someone the City may contact for any questions or provide any correspondence related to this RFP.

LEGAL NAME OF PROPOSER(S) Limousines of South Florida, Inc.

FEDERAL EMPLOYEE IDENTIFICATION (FEIN) NUMBER 59-2564092

MAILING ADDRES: 6053 W Century Blvd, 9th Floor

CITY, STATE, ZIP CODE: Los Angeles, CA 90045

CONTACT PERSONS NAME: Kevin J. Adams

TITLE: Executive Vice President Business Development and Ops Planning

EMAIL ADDRESS: kadams@keolistransit.com

TELEPHONE NUMBER: (865) 531 1526

FAX NUMBER: (865) 381 1800

AUTHORIZED SIGNATURE: Kevin J Adams

PRINT NAME & TITLE: KEVIN J ADAMS EVP

2. Business Structure

Limousines of South Florida, Inc., a Florida Corporation in operation since 1984, is a wholly owned subsidiary of Keolis Transit America, Inc. (formerly Tectrans, Inc.). The acquisition of Tectrans, Inc. by Keolis America, Inc., the United States subsidiary of Keolis SA (the parent company located in Paris, France), represents a unique combination of decades of public transit experience here in the United States with multi-modal experience on a global level. Together, Keolis SA and Tectrans agreed that the new name for Tectrans would be Keolis Transit America. However, we do not distinguish between our abilities, history and experience and that of our parent company, and thus we identify ourselves as simply, Keolis. As such we have included Keolis financial statements for the three previous years in a separate sealed envelope.

LSF Shuttle is a professional transportation management and operations firm organized specifically to supply expertise to both public and private transportation systems. We are pleased to submit the following proposal to continue providing Community Transportation Services for the City of North Miami. We are confident that you will find our submittal is responsive to the Request for Proposals.

Firm Name:	Limousines of South Florida, Inc.
Address:	3300 SW 11th Street, Fort Lauderdale, FL 33315
Phone:	(865) 531-1526
Fax:	(865) 381-1800
Contact Person:	Mr. Kevin J. Adams, EVP, Business Development and Ops Planning
	(Company's authorized representative)

Keolis and its subsidiaries remain dedicated to providing best-in-class passenger transportation solutions for our customers through technological innovation, enhanced relationship management and genuine care for our employees. We are very proud of the service we have provided for the City and sincerely hope to continue that partnership through this new contract. If you have any questions regarding our proposal, please contact me at (865) 531-1526 or at kadams@keolistransit.com.

Sincerely,

Kevin J Adams

Kevin J. Adams
Executive Vice President
Business Development and Ops Planning

State of Florida
Department of State

I certify from the records of this office that LIMOUSINES OF SOUTH FLORIDA, INC. is a corporation organized under the laws of the State of Florida, filed on February 14, 1985.

The document number of this corporation is M11337.

I further certify that said corporation has paid all fees due this office through December 31, 2013, that its most recent annual report/uniform business report was filed on April 29, 2013, and its status is active.

I further certify that said corporation has not filed Articles of Dissolution.

Given under my hand and the Great Seal of the State of Florida at Tallahassee, the Capital, this the Third day of September, 2013

Ken Detzner

Secretary of State

Authentication ID: CU9957060155

To authenticate this certificate,visit the following site,enter this ID, and then follow the instructions displayed.

https://efile.sunbiz.org/certauthver.html

MIAMI-DADE COUNTY
TAX COLLECTOR
140 W. FLAGLER ST.
1st FLOOR
MIAMI, FL 33130

2012 LOCAL BUSINESS TAX RECEIPT 2013
MIAMI-DADE COUNTY - STATE OF FLORIDA
EXPIRES SEPT. 30, 2013
MUST BE DISPLAYED AT PLACE OF BUSINESS
PURSUANT TO COUNTY CODE CHAPTER 8A - ART. 9 & 10

FIRST-CLASS
U.S. POSTAGE
PAID
MIAMI, FL
PERMIT NO. 231

THIS IS NOT A BILL – DO NOT PAY

684378-4

RENEWAL

BUSINESS NAME / LOCATION

RECEIPT NO. 711781-5

LIMOUSINES OF SOUTH FLORIDA INC STATE# MVR 59982
3611 NW S RIVER DR
33142 UNIN DADE COUNTY

OWNER
LIMOUSINES OF SOUTH FLORIDA INC

Sec. Type of Business
213 AUTO / TRUCK / VAN SERVICE

EMPLOYEE/S
160

THIS IS ONLY A LOCAL BUSINESS TAX RECEIPT. IT DOES NOT PERMIT THE HOLDER TO VIOLATE ANY EXISTING REGULATORY OR ZONING LAWS OF THE COUNTY OR CITIES. NOR DOES IT EXEMPT THE HOLDER FROM ANY OTHER PERMIT OR LICENSE REQUIRED BY LAW. THIS IS NOT A CERTIFICATION OF THE HOLDER'S QUALIFICATIONS.

DO NOT FORWARD

LIMOUSINES OF SOUTH FLORIDA INC
MICHAEL GRIFFUS PRES
3300 SW 11 AVE
FORT LAUDERDALE FL 33315

PAYMENT RECEIVED
MIAMI-DADE COUNTY TAX COLLECTOR:
07/20/2012
60010000460
001200.00

972

SEE OTHER SIDE

CERTIFICATE OF LIABILITY INSURANCE

DATE (MM/DD/YYYY) 05/31/2013

THIS CERTIFICATE IS ISSUED AS A MATTER OF INFORMATION ONLY AND CONFERS NO RIGHTS UPON THE CERTIFICATE HOLDER. THIS CERTIFICATE DOES NOT AFFIRMATIVELY OR NEGATIVELY AMEND, EXTEND OR ALTER THE COVERAGE AFFORDED BY THE POLICIES BELOW. THIS CERTIFICATE OF INSURANCE DOES NOT CONSTITUTE A CONTRACT BETWEEN THE ISSUING INSURER(S), AUTHORIZED REPRESENTATIVE OR PRODUCER, AND THE CERTIFICATE HOLDER.

IMPORTANT: If the certificate holder is an ADDITIONAL INSURED, the policy(ies) must be endorsed. If SUBROGATION IS WAIVED, subject to the terms and conditions of the policy, certain policies may require an endorsement. A statement on this certificate does not confer rights to the certificate holder in lieu of such endorsement(s).

PRODUCER
MARSH USA INC.
SUITE 400
1255 23RD STREET, N.W.
WASHINGTON, DC 20037

662870-ALL--13-14 5.23

CONTACT NAME:
PHONE (A/C, No, Ext): **FAX (A/C, No):**
E-MAIL ADDRESS:

INSURER(S) AFFORDING COVERAGE		NAIC #
INSURER A :	Scottsdale Insurance Company	41297
INSURER B :	National Interstate Insurance Company	32620
INSURER C :	Liberty Insurance Corporation	42404
INSURER D :		
INSURER E :		
INSURER F :		

INSURED
LIMOUSINES OF SOUTH FLORIDA, INC.
2595 NW 38TH STREET
MIAMI, FL 33142

COVERAGES **CERTIFICATE NUMBER:** CLE-003824846-04 **REVISION NUMBER:** 1

THIS IS TO CERTIFY THAT THE POLICIES OF INSURANCE LISTED BELOW HAVE BEEN ISSUED TO THE INSURED NAMED ABOVE FOR THE POLICY PERIOD INDICATED. NOTWITHSTANDING ANY REQUIREMENT, TERM OR CONDITION OF ANY CONTRACT OR OTHER DOCUMENT WITH RESPECT TO WHICH THIS CERTIFICATE MAY BE ISSUED OR MAY PERTAIN, THE INSURANCE AFFORDED BY THE POLICIES DESCRIBED HEREIN IS SUBJECT TO ALL THE TERMS, EXCLUSIONS AND CONDITIONS OF SUCH POLICIES. LIMITS SHOWN MAY HAVE BEEN REDUCED BY PAID CLAIMS.

INSR LTR	TYPE OF INSURANCE	ADDL INSR	SUBR WVD	POLICY NUMBER	POLICY EFF (MM/DD/YYYY)	POLICY EXP (MM/DD/YYYY)	LIMITS		
A	**GENERAL LIABILITY**			BCS0030317	06/01/2013	06/01/2014	EACH OCCURRENCE	$	1,000,000
	X COMMERCIAL GENERAL LIABILITY						DAMAGE TO RENTED PREMISES (Ea occurrence)	$	100,000
	CLAIMS-MADE X OCCUR						MED EXP (Any one person)	$	5,000
							PERSONAL & ADV INJURY	$	1,000,000
							GENERAL AGGREGATE	$	2,000,000
	GEN'L AGGREGATE LIMIT APPLIES PER:						PRODUCTS - COMP/OP AGG	$	2,000,000
	X POLICY PRO-JECT LOC							$	
B	**AUTOMOBILE LIABILITY**			TTP 8195000-02	06/01/2013	06/01/2014	COMBINED SINGLE LIMIT (Ea accident)	$	1,000,000
	X ANY AUTO						BODILY INJURY (Per person)	$	
	ALL OWNED AUTOS / SCHEDULED AUTOS						BODILY INJURY (Per accident)	$	
	HIRED AUTOS / NON-OWNED AUTOS						PROPERTY DAMAGE (Per accident)	$	
								$	
A	**UMBRELLA LIAB** X OCCUR			XLS0088611	06/01/2013	06/01/2014	EACH OCCURRENCE	$	5,000,000
	X **EXCESS LIAB** CLAIMS-MADE			EXCESS GENERAL LIABILITY			AGGREGATE	$	5,000,000
	DED RETENTION $							$	
C	**WORKERS COMPENSATION AND EMPLOYERS' LIABILITY** Y / N			WA7-651-290802-013	06/01/2013	06/01/2014	X WC STATU-TORY LIMITS OTH-ER		
	ANY PROPRIETOR/PARTNER/EXECUTIVE OFFICER/MEMBER EXCLUDED? **(Mandatory in NH)** N	N / A					E.L. EACH ACCIDENT	$	1,000,000
	If yes, describe under DESCRIPTION OF OPERATIONS below						E.L. DISEASE - EA EMPLOYEE	$	1,000,000
							E.L. DISEASE - POLICY LIMIT	$	1,000,000
B	Excess Auto			TXP 8195000-03	06/01/2013	06/01/2014			1,000,000

DESCRIPTION OF OPERATIONS / LOCATIONS / VEHICLES (Attach ACORD 101, Additional Remarks Schedule, if more space is required)
Certificate Holder is included as an Additional Insured under the Auto and General Liability as respects to operations of the insured.

CERTIFICATE HOLDER

City of North Miami
776 NE 125th Street
North Miami FL 33161

CANCELLATION

SHOULD ANY OF THE ABOVE DESCRIBED POLICIES BE CANCELLED BEFORE THE EXPIRATION DATE THEREOF, NOTICE WILL BE DELIVERED IN ACCORDANCE WITH THE POLICY PROVISIONS.

AUTHORIZED REPRESENTATIVE
of Marsh USA Inc.
Manashi Mukherjee Manashi Mukherjee

© 1988-2010 ACORD CORPORATION. All rights reserved.

The ACORD name and logo are registered marks of ACORD

AGENCY CUSTOMER ID: 662870
LOC #: Washington

ACORD® ADDITIONAL REMARKS SCHEDULE

AGENCY	NAMED INSURED
MARSH USA INC.	LIMOUSINES OF SOUTH FLORIDA, INC. 2595 NW 38TH STREET MIAMI, FL 33142
POLICY NUMBER	
CARRIER / NAIC CODE	EFFECTIVE DATE:

ADDITIONAL REMARKS

THIS ADDITIONAL REMARKS FORM IS A SCHEDULE TO ACORD FORM,
FORM NUMBER: 25 FORM TITLE: Certificate of Liability Insurance

EXCESS AUTO LIABILITY
CARRIER: AIG EUROPE LIMITED
POLICY NO.: 62785404
EFF./EXP.: DATES: 06/01/2013 - 06/01/2014
LIMITS: $3,000,000 xs $2,000,000

NAMED INSUREDS:

KEOLIS AMERICA, INC.
WESTERN TRANSIT SYSTEMS, INC.
DIVERSIFIED TRANSPORTATION, LLC
dba Paul's Yellow Cab Company, Inc.
dba Yellow Cab
MOBILITY PLUS TRANSPORTATION, LLC
LIMOUSINES of SOUTH FLORIDA, INC.
CDSNET, LLC
MY TRANSIT PLUS, INC.
YELLOW CAB OF GREATER ORANGE COUNTY
dba Classic Yellow Cab
dba Classic Sedan
dba Coast Yellow Cab, Inc.
dba Laguan Silver Cab
dba JWA Yellow Cab Service
KEOLIS RAIL AMERICA, LLC
KEOLIS RAIL SERVICES VIRGINIA, LLC

© 2008 ACORD CORPORATION. All rights reserved.
The ACORD name and logo are registered marks of ACORD

NORTH MIAMI
FLORIDA

Form "A-9"

Bidder Must Submit With Bid
BID BOND

KNOW ALL MEN BY THESE PRESENTS, that we, Limousines of South Florida, Inc. as Principal, hereinafter called Contractor, and Westchester Fire Insurance Company as Surety, are held and firmly bound unto the City of North Miami, Florida, as a municipal corporation of the State of Florida, hereinafter called the City, in the sum of five percent (5%) of the Base Bid amount of:

Seven Hundred & Fifty Thousand Dollars $750,000.00
(Written Dollar Amount)

dollars ($ 750,000.00) lawful money of the United States of American, for the payment of which well and truly to be made, we bind ourselves, our heirs, executors, administrators, successors, and assigns, jointly and severally by these presents.

WHEREAS, the Contractor contemplates submitting or has submitted, a Bid to the City for the furnishing of all labor, materials, equipment, machinery, tools, apparatus, means of transportation for, and the performance of the Work covered in the Bid Documents which include the Project Manual, the detailed Plans and Specifications, and any Addenda thereto, for the RFP No. 48-12-13 entitled, Community Transportation Services

WHEREAS, it was a condition precedent to the submission of said Bid that a cashier's check, certified check, or Bid Bond in the amount of five percent (5%) of the Base Bid be submitted with said Bid as a guarantee that the Bidder would, if awarded the Contract, enter into a written Contract with the City for the performance of said Contract, within ten (10) consecutive calendar days after notice having been given of the Award of the Contract.

NOW, THEREFORE, THE CONDITION OF THIS OBLIGATION IS SUCH, that if the Contractor within ten (10) consecutive calendar days after notice of such acceptance, enters into a written Contract with the City and furnishes the Performance and Payment Bonds, satisfactory to the City, each in an amount equal to one hundred percent (100%) of the Contract Price, and provides all required Certificates of Insurance, then this obligation shall be void; otherwise the sum herein stated shall be due and payable to the City of North Miami and the Surety herein agrees to pay said sum immediately, upon demand of the City, in good and lawful money of the United States of America, as liquidated damages for failure thereof of said Contractor.

NORTH MIAMI
FLORIDA

Form "A-9"

IN WITNESS WHEREOF, the above bounded parties have caused this Bond to be executed by their appropriate officials of the 1st day of October, 2013.

WITNESS:

_____

PRINCIPAL:
(If sole Proprietor or partnership)

_____
(Firm Name)

BY_____

_____
Title: (Sole Proprietor or Partner)

PRINCIPAL (If Corporation)

Limousines of South Florida, Inc.
(Corporate Name)

BY_____
(President)

Attest:_____
(Secretary)

(CORPORATE SEAL)

COUNTERSIGNED BY RESIDENT FLORIDA AGENT OF SURETY:
Ana W Oliveras

Ana W. Oliveras
(Copy of Agent's current License as issued by State of Florida Insurance Commissioner

SURETY:

Westchester Fire Insurance Company

By:_____
Attorney-in-fact Francis J Curran

(Power of Attorney must be attached)

Power of Attorney

WESTCHESTER FIRE INSURANCE COMPANY

Know all men by these presents: That **WESTCHESTER FIRE INSURANCE COMPANY,** a corporation of the Commonwealth of Pennsylvania pursuant to the following Resolution, adopted by the Board of Directors of the said Company on December 11, 2006, to wit:

RESOLVED, that the following authorizations relate to the execution, for and on behalf of the Company, of bonds, undertakings, recognizances, contracts and other written commitments of the Company entered into the ordinary course of business (each a "Written Commitment").

(1) Each of the Chairman, the President and the Vice Presidents of the Company is hereby authorized to execute any Written Commitment for and on behalf of the Company, under the seal of the Company or otherwise.

(2) Each duly appointed attorney-in-fact of the Company is hereby authorized to execute any Written Commitment for and on behalf of the Company, under the seal of the Company or otherwise, to the extent that such action is authorized by the grant of powers provided for in such persons written appointment as such attorney-in-fact.

(3) Each of the Chairman, the President and the Vice Presidents of the Company is hereby authorized, for and on behalf of the Company, to appoint in writing any person the attorney-in-fact of the Company with full power and authority to execute, for and on behalf of the Company, under the seal of the Company or otherwise, such Written Commitments of the Company as may be specified in such written appointment, which specification may be by general type or class of Written Commitments or by specification of one or more particular Written Commitments.

(4) Each of the Chairman, the President and Vice Presidents of the Company in hereby authorized, for and on behalf of the Company, to delegate in writing any other officer of the Company the authority to execute, for and on behalf of the Company, under the Company's seal or otherwise, such Written Commitments of the Company as are specified in such written delegation, which specification may be by general type or class of Written Commitments or by specification of one or more particular Written Commitments.

(5) The signature of any officer or other person executing any Written Commitment or appointment or delegation pursuant to this Resolution, and the seal of the Company, may be affixed by facsimile on such Written Commitment or written appointment or delegation.

FURTHER RESOLVED, that the foregoing Resolution shall not be deemed to be an exclusive statement of the powers and authority of officers, employees and other persons to act for and on behalf of the Company, and such Resolution shall not limit or otherwise affect the exercise of any such power or authority otherwise validly granted or vested.

Does hereby nominate, constitute and appoint Francis J Curran, Marina A Kenney, Sally Phillips, all of the City of PHILADELPHIA, Pennsylvania, each individually if there be more than one named, its true and lawful attorney-in-fact, to make, execute, seal and deliver on its behalf, and as its act and deed any and all bonds, undertakings, recognizances, contracts and other writings in the nature thereof in penalties not exceeding Twenty million dollars & zero cents ($20,000,000.00) and the execution of such writings in pursuance of these presents shall be as binding upon said Company, as fully and amply as if they had been duly executed and acknowledged by the regularly elected officers of the Company at its principal office,

IN WITNESS WHEREOF, the said Stephen M. Haney, Vice-President, has hereunto subscribed his name and affixed the Corporate seal of the said **WESTCHESTER FIRE INSURANCE COMPANY** this 7 day of December 2012.

WESTCHESTER FIRE INSURANCE COMPANY

Stephen M. Haney

Stephen M. Haney, Vice President

COMMONWEALTH OF PENNSYLVANIA
COUNTY OF PHILADELPHIA ss.

On this 7 day of December, AD. 2012 before me, a Notary Public of the Commonwealth of Pennsylvania in and for the County of Philadelphia came Stephen M. Haney, Vice-President of the **WESTCHESTER FIRE INSURANCE COMPANY** to me personally known to be the individual and officer who executed the preceding instrument, and he acknowledged that he executed the same, and that the seal affixed to the preceding instrument is the corporate seal of said Company; that the said corporate seal and his signature were duly affixed by the authority and direction of the said corporation, and that Resolution, adopted by the Board of Directors of said Company, referred to in the preceding instrument, is now in force.

IN TESTIMONY WHEREOF, I have hereunto set my hand and affixed my official seal at the City of Philadelphia the day and year first above written.

COMMONWEALTH OF PENNSYLVANIA
NOTARIAL SEAL
KAREN E. BRANDT, Notary Public
City of Philadelphia, Phila. County
My Commission Expires September 28, 2014

Karen E Brandt
Notary Public

I, the undersigned Assistant Secretary of the **WESTCHESTER FIRE INSURANCE COMPANY,** do hereby certify that the original POWER OF ATTORNEY, of which the foregoing is a substantially true and correct copy, is in full force and effect.

In witness whereof, I have hereunto subscribed my name as Assistant Secretary, and affixed the corporate seal of the Corporation, this 1st day of Oct 2013

William L. Kelly

William L. Kelly, Assistant Secretary

THIS POWER OF ATTORNEY MAY NOT BE USED TO EXECUTE ANY BOND WITH AN INCEPTION DATE AFTER December 07, 2014.

Super Safety® ANTI-FRAUD PROTECTION
FORM NO. 8800S
THE BACK OF THIS DOCUMENT LISTS VARIOUS SECURITY FEATURES THAT WILL PROTECT AGAINST COPY COUNTERFEIT AND ALTERATION.

FLORIDA DEPARTMENT OF INSURANCE

ANA W OLIVERAS

License Number E077488

IS LICENSED TO TRANSACT THE FOLLOWING CLASSES OF INSURANCE:

General Lines (Prop & Casu)

RESIDENT LICENSE

3. Firm Past Experience

LSF Shuttle Experience

As a member of the Keolis family of companies, the LSF Shuttle management team brings more than 300 combined years of experience in the specialized, ground-based passenger transportation industry. Our team is able to build success through the application of new technologies and transportation best practices for existing customers as well as new clients. Through our experience operating fixed-route shuttle services with various customers, as well as the experience operating transportation for additional government, transit, and private organizations, our team understands that the continued success of the City of North Miami's Community Transportation Service requires:

- **Safety** – is every Keolis employee's #1 responsibility.
- **Reliability** – passengers rely on timely, efficient service.
- **Sensitivity** – to the needs of each individual passenger.
- **Kind Employees** – that naturally care about their passengers.
- **Flexibility** – to meet the changing needs of the passengers of the City of North Miami.
- **Communication** – maintain open lines of communication with both our staff and passengers.
- **Understanding** – of best practices to operate on-time, safe, and reliable shuttle service.

In Miami-Dade County, we currently provide Community Transportation Services for the City of North Miami, as well as the City of Aventura, the Town of Bay Harbor Island, the Village of Bal Harbour, the Town of Surfside, Miami Shores Village, the Town of Miami Lakes, and the City of Miami Springs. We are also currently providing Community Shuttle Services for many cities in Broward County. These municipalities include the City of Coral Springs, the City of Lauderdale Lakes, the City of Plantation, the City of Dania Beach, the City of Hallandale Beach, the City of Hollywood, the City of Pompano Beach and the City of Lauderhill.

We provide trolley services for the City of Doral, the City of Homestead and the Downtown Fort Lauderdale Transportation Management. Additionally, LSF Shuttle provides shuttle service for all Tri-Rail feeder routes in Broward County as well as the employee and parking lot shuttles at the Fort Lauderdale International Airport. As one can see, LSF Shuttle has more experience, than any other company, in South Florida, providing Community and Municipal Shuttle Bus Service like the City's Community Transportation Services.

LSF Shuttle References

LSF Shuttle was able to win and retain the confidence of major public transit agencies through its concrete, noticeable contribution to the management, design and development of systems. LSF Shuttle has been a true pioneer in the areas of marketing, service quality and accessibility. We go above and beyond standard expectations through a unique analysis of a system's characteristics, as well as its passengers' transit behaviors and lifestyle. Our operations share a common organizational structure, operating methodologies and optimization tools that define our reputation as a contractor with the best customized approach to transit in a local community. LSF Shuttle is dedicated to bringing this unique expertise in bus system operations to the City of North Miami.

Exhibit 1 – Customer Reference Table

Client Name:	City of Coral Springs	
Address:	9551 West Sample Road Coral Springs, FL 33065	
Telephone Number	(954) 457-1669	
Contact Person	Mr. Rick Engle	
Annual Revenues	$260,000	
Length of Service	2006 - Present	
Type of Service	Community shuttle bus service within the City of Coral Springs.	
Client Name:	City of Margate	
Address:	102 Rock Island Rd Margate, FL 33063	
Telephone Number	(954) 972-8127	
Contact Person	Mr. Samuel May	
Annual Revenues	$480,000	
Length of Service	2010 - Present	
Type of Service	Community shuttle bus service within the City of Margate.	
Client Name:	Miami Trolley	
Address:	444 SW 2nd Avenue 8th Floor Miami FL, 33130	
Telephone Number	(305) 416-1726	
Contact Person	Ms. Jarice Rodriguez	
Annual Revenues	$2,875,000	
Length of Service	2012- Present	
Type of Service	A free trolley service provided by the City of Miami with regular and recurring special routes.	

4. Team Experience

LSF Shuttle has the experience and ability to staff, train and operate public shuttle services-as we have demonstrated by providing only the highest quality service to you and the rest of our existing client list, which includes municipalities and other government entities. We employ more than 350 operators in our existing operations, which again speaks directly to our ability to effectively hire and train staff.

Mike Rosson: Project Manager

Mr. Mike Rosson is a highly accomplished Fixed Route and Paratransit Transportation professional with outstanding record of improving overall on-time performance and customer service for contract services. He has over 18 years of transportation experience that includes but not limited to managing fixed route, shuttle, deviated fixed route, and paratransit contracts. Mike is a "Service Excellence" manager who focuses on developing human potential at all levels of the transit operation, on high-quality service, maintenance, operator training, safety, and professionalism. He is a visionary leader who is proud of collaborating with the community, local business leaders, developers, city planners, and elected officials to improve the quality of life for its residents. Having been a successful leader in both Transit Operations and Paratransit Operations, he will bring a unique perspective and skill-set not held by many transit general managers – he can fully relate to Transit Agency's perspective and assist them in their efforts for continuous service improvement - from marketing to funding - all while running a very successful and operationally sound transit operation.

Mike's major responsibilities will include operations management and oversight of the day-to-day operations, assessing daily system performance, approving and submitting all project reporting, directing program activities, and communicating common goals and objectives. Additional duties will include overseeing regulatory compliance, quality assurance oversight, and coordinating closely with City staff on project operations. Mike is available at any time of the day or night. He understands our company standards of excellent and complaint-free service for our customers. A resume for Mr. Mike Rosson is included in Appendix A at the end of this proposal.

Jackie Castillo: Operations Manager

Ms. Jackie Castillo is the new Operations Manager for the City of North Miami services, having served as one of the supervisors at our Community facility for the past two years. She started her career with LSF Shuttle as a dispatch supervisor in 2007 and quickly learned the importance of focusing on safety and customer service while working with and supporting the shuttle operators and dispatchers. Throughout her time with the company, Jackie has steadily moved up through the organization.

In her new role as Operations Manager, Jackie will be assigned as the secondary immediate contact for the City of North Miami. She will be on site and in the City of North Miami on a regular basis to monitor operations and ensure that customers are receiving the quality services they have grown to expect from LSF Shuttle. Jackie will prepare brief weekly service reports that she will provide to the City to keep staff well informed as to how operations is running. At a minimum, Jackie along with Mike will schedule monthly meetings with the City staff to identify and address any issues that the City may have.

Albert Delgado: Maintenance Manager

Mr. Albert Delgado is the maintenance manager at our Community facility. Albert has 20 years of maintenance experience working on vehicles of all types and sizes. He has extensive experience maintaining transit and paratransit vehicles. Albert is responsible for the complete maintenance program for all shuttle service vehicles. Most importantly he maintains 100% compliance with our complete preventive maintenance program. Albert directs and supervises all maintenance activities,

including supervision of maintenance staff; vendor relations and parts procurement; warranty repair; and coordination of corporate support.

Frontline Employee Experience

At LSF Shuttle we understand that our frontline employees such as vehicle operators, dispatchers and maintenance technicians are the true heart of the service. Their experience and knowledge help to ensure the daily operations are safe, reliable and efficient. Nearly 30% of the workforce for this contract lives within the City of North Miami providing even more local knowledge and expertise to the operation.

Vehicle Operators

All of the vehicle operators for the City of North Miami's Shuttle service have at least 4 years of direct experience with the service. The vehicle operators and the routes they operate are listed below:

- Gabriel Damus – Green AM
- Richard Isom – Blue AM
- Jean Nelson – Orange AM
- Richard Dessin – Red AM
- Louis Lunick – Green PM
- Junior Dennis – Blue PM
- Yves Saint-Victor – Orange PM
- Hector Miller – Red PM

Maintenance Technicians

The maintenance technician assigned to the City of North Miami Shuttle service has over 4 years of maintenance experience and is ASE certified for Refrigerant Recovery and Recycling.

Dispatchers

Dispatching for the City of North Miami's Shuttle services is shared among the three dispatchers at our Community Facility. Each of our experienced dispatchers have at least 3 years of experience dispatching community shuttle services.

Corporate and Regional Resources

LSF Shuttle is proud of the team of individuals leading our transportation operations. Over the following pages, we provide you with an introduction to our local management team, our company's corporate leaders, and the critical support staff that form the foundation of our efforts to provide exceptional transportation services to our riders and contract agencies.

Our corporate leaders are an integral part of the key management team and are vital to making its daily operations so successful. They provide oversight, direction and support to the dedicated local management team described above.

Thomas Stringer: Regional Vice President - East Operations

Mr. Thomas Stringer is a veteran of the US transit industry having served as the Director of Transportation for the Charlotte Area Transit System (CAT) for nearly five years. He also served as a Regional Vice President in the Southeastern US for three years for a major US transit and paratransit firm before joining LSF Shuttle in 2011. Before his current position of Regional Vice President for East

Operations, Mr. Thomas Stringer served as the General Manager of the Collier Area Transit service. He has a proven record of success managing passenger transportation systems under contract with public transit agencies and has worked in fixed-route, flex-route and ADA paratransit environments

Steve Shaw: Chief Operating Officer

Mr. Steve Shaw, our Chief Operating Officer, grew up working in the family-owned bus business, Shaw Bus Service (SBS). When SBS was purchased by National School Bus in 1995 he became a Regional Manager. National was acquired in 1997 by Laidlaw Transit and Steve became the Area General Manger for the Mid-Atlantic region. Steve joined Veolia in 2005 as its Regional Vice President for the Mid-Atlantic Region overseeing 25 different public transit contracts including some of the company's larger fixed route, BRT and Paratransit services. During this time Steve also served as a Chief Safety Officer.

Michael Griffus: Chief Executive Officer

Mr. Michael Griffus, Chief Executive Officer, has been a leader in the American transportation industry for over 25 years, with extensive experience in managing vehicle operations across the nation. A veteran of the United States Marine Corps and a graduate of the University of Washington in Seattle, Mike takes a dynamic role in leading and directing the team, actively promoting diversity among all levels of the organization.

Prior to joining Keolis as CEO in early 2010, Mike served as the President and COO of Veolia Transportation, where he was responsible for client satisfaction at more than 120 contract locations including many fixed-route operations. He has extensive experience working with union and non-union employees and understands that front-line employees are critical to the success of the company and should be recognized as such.

Mike strongly believes in giving back to the community and continues to be actively involved with such organizations as WTS, the Cesar Chavez Foundation, and the Opportunities Industrialization Center (OIC), encouraging his employees to be involved in their local communities and give generously as well.

As CEO, he believes strongly in the corporate theme, "We do things the right way, every day," and supports each transit operation as they strive to live a culture of integrity and quality service.

Corporate Support

LSF Shuttle believes in empowering our employees to operate in the safest, most efficient and most customer friendly manner possible. Part of that empowerment is providing each of our management teams with sufficient support. At LSF Shuttle, corporate support takes on a new meaning. Our corporate, regional and local management teams have more than 300 years of experience working in a transit environment which affords our local general manager to provide one-on-one oversight with our staff, operators and our passengers while providing a point of contact to the City with direct responsibility. Our corporate and regional staff has been in support of our local management team since the inception of the service for the City of North Miami. From providing detailed operational plans for the City, to availability to meet City administrative staff, our staff is ready to assist in any transit related process to support the needs of the ridership.

The individuals listed in the following table are significant members of the corporate support team.

Exhibit 2 – Additional Regional and Corporate Support

Dirk Schniedermeier **Chief Technology Officer** ▪ Installation, and implementation of technologies ▪ IT set-up and support ▪ Telephony and administrative systems ▪ IT and MIS consulting services	**Joe Cardoso** **Chief Financial Officer** ▪ Insurance and Bonding ▪ Financial reporting ▪ Accounting and finance assistance ▪ Standard Financial Operating Procedures
Kevin Adams **EVP, Business Development and Ops Planning** ▪ Contract negotiations and compliance ▪ Budget and corporate liaison ▪ Communications and Customer Satisfaction ▪ Customer relations	**Perri Newell** **Senior Vice President, Human Resources** ▪ Orientation meetings with the transitioning employees ▪ Administrative tasks such as creating new-hire packets and employee files ▪ Performing background checks and other compliance
Cindi Ritter **Senior Vice President, Management Systems and Compliance** ▪ Oversight of ongoing efforts to ensure quality control for all customers. ▪ Tracking of all location Key Performance Indicators (KPIs) ▪ Installation of standard reporting policies and procedures during transition period.	**Drew Jones** **Senior Vice President, Safety and Risk Management** ▪ Assist with training files for new employees ▪ Drug and alcohol testing and compliance ▪ Insurance coverage ▪ Inspection of facility
Steve Helriegel **Vice President, Maintenance and Purchasing** ▪ Maintenance oversight ▪ Vendor support ▪ Maintenance data collection & reporting ▪ Regulatory compliance verification & support	

Management Plan

LSF Shuttle believes in empowering our employees to operate in the safest, most efficient and most customer friendly manner possible. Part of that empowerment is providing each of our management teams with sufficient support. At LSF Shuttle, corporate support takes on a new meaning. Our approach is not only to provide real technical and managerial support to our local managers, communicating with them routinely offering advise where needed, but also to be part of the process where problems are defined and solutions are found. Our corporate and technical staff will always be available to work collaboratively with our local staff and the staff of the City of North Miami.

Operations Supervisor and Dispatchers

These positions are the front line support for the operators. They are charged with safe, efficient and on-time delivery of services. By design, these positions are required to hold valid commercial driver's

licenses because these supervisors are expected to be able to perform all the duties associated with the service and are available to do so if required.

LSF Shuttle takes a great deal of pride in its management approach to the day-to-day operations and has operating procedures and policies that result in the provision of high quality service. LSF Shuttle always endeavors to exceed the standards set by our customers and the industry.

Project Management

Managerial oversight is provided by our existing management and executive staff. They maintain a close working relationship with the City's operations, assess and interpret the system's needs, and serve as key communicators on industry trends and "best practices." Our local on-site manager communicates daily directly with the Regional Vice President of East Region Operations, who is also local and available to assist as needed. LSF Shuttle has built its reputation on being on-site in the local market to assist its clients with all transportation needs.

Operator Staffing

Even with the newest vehicles and friendliest voices, the customer isn't satisfied unless their service is provided by a safe, trustworthy, professional and courteous operator. LSF Shuttle has and continues to invest great time and resources to ensure that each and every operator meets or exceeds our standards of excellence.

Within the passenger transportation industry, LSF Shuttle has positioned itself as the "Employer of Choice." Our attention to employee welfare and valuing the contribution of our employees to our overall success are just two of the many ways that ensure we attract the best employees. In this section of the proposal, we describe the various programs used by LSF Shuttle to maintain a stable, effective, and high quality workforce which provides our customers with the best shuttle services possible.

CandidateCare Workforce Development Program

The LSF Shuttle CandidateCare Workforce Development Program was developed to identify and select the most qualified employees in a standardized manner. Applicants begin the hiring process online by registering and answering organizational and job-specific pre-qualifying questions. Candidates then fill out an electronic job application. A series of assessment tools designed to screen-out unfit applicants include:

- Customized career-board and online applicant tracking system
- Organizational and job related on-line pre-screen surveys
- User and administrative portals for customized job board postings and status dashboard, online employment application, pre-employment forms, digital signature technology and metrics and tracking database
- Fully customized and automated candidate status update, selection and rejection emails
- Validated fixed-route job-specific structured employment interview (with behaviorally-anchored items and online scoring template)
- Online skills based assessments including; numerical ability, reading comprehension and the ability to follow directions

Hiring and performance metrics management platform EEO data collection and reporting steps of the CandidateCare program are:

- Realistic Job Preview
- Organizational Pre-Qualifying Questions
- Job Specific Questions
- Employment Application
- Job Specific Assessments
- Job Specific Structured Interview
- Reference and Background Checks
- Medical/Drug Screen
- Job Offer

Hiring Standards

Automatic and manual updates to the applicant's status are made at each step in the hiring process, ensuring compliance with LSF Shuttle' hiring process. At minimum, all applicants must:

- Complete and sign an Employment Application through CandidateCare.
- Provide complete and verifiable employment history.
- Pass a criminal background check based on standards established by federal and state law.
- Possess a valid driver's license, including proper endorsements.
- Complete a structured and documented employment interview.

Applicants for operator positions also must:

- Be at least twenty-five (25) years of age.
- Have a minimum of seven (7) years driving experience.
- Possess a high school diploma or GED.
- Be a US citizen or provide proof of the right to work in the United States.
- Be able to communicate in English, both orally and written.
- Possess a valid Florida Commercial Driver's License, Class B or above, with passenger endorsement, as well as any other license required by applicable local, state, and federal laws and regulations.
- Pass a U.S. Department of Transportation physical examination.
- Pass an FTA compliant pre-employment drug/alcohol screen.

LSF Shuttle asks all applicants to thoroughly review the job description and physical demand schedule for the job in which he or she is applying. Applicants must be physically able to safely use each piece of equipment necessary to perform assigned duties with or without reasonable accommodation.

LSF Shuttle will review the existence of any violations or convictions and may deny employment based on a violation, conviction, or pattern of violations or convictions indicating a safety risk. An original Motor Vehicle Record must be obtained before the employment application is acted upon.

As part of the CandidateCare program, applicants must also complete a structured, documented employment interview. Interview questions are behavior-based and are based on job requirements, derived directly from the performance criteria stated in the job description. Every applicant will be

asked the same interview questions for the same or similar positions and detailed notes and documented responses will be collected from the interviewer.

The importance of our safety culture, starting with the hiring process, cannot be overstated. Our commitment to safety begins with this process, where we instill our SEE #1 attitude from the onset.

Pre-Employment Drug Testing

For safety reasons, all LSF Shuttle employee applicants must undergo a pre-employment drug test by an appointed physician or facility and receive clearance from prior DOT employers as a condition of employment. Applicants do not have advance notice of their scheduled drug test. If the drug test is cancelled for any reason, applicants must retake the test and receive a negative result prior to working in a safety-sensitive position or entering a company vehicle. Applicants who have previously failed a drug or alcohol test in a safety-sensitive position will not be considered for employment unless proof of successfully completing a treatment program is provided.

Ongoing Monitoring of Credentials

LSF Shuttle has extensive experience providing transit services to the public. As a professional and experienced operator, we know the importance of maintaining our qualifications and legal authority to operate within the State of Florida. We also know the many benefits of maintaining strict regulatory, safety, and legal compliance. Prior to hiring, all employees are required to undergo a ten year nationwide criminal background check and provide a current motor vehicle record report that documents at least seven years driving history. LSF Shuttle follows up on all findings documented in these reports, and documents corrective action and hiring decisions in employee files as appropriate.

However, even the most stringent of pre-employment screening measures will be ineffective, unless they are monitored and updated on an ongoing basis. This is why LSF Shuttle performs motor vehicle record reports annually for all current employees.

In addition, we track operator credentials through routine standard reporting practices, and verify operator credentials through our window dispatch process, including operator possession of the appropriate commercial driver's license, current medical certificate, and other credentials as required.

Finally, we contract with a third party firm to verify criminal background reviews, national database for fingerprint review and all surrounding and adjoining state agencies to ensure safe operations.

Employee Retention

We believe employee retention is a byproduct of a well-run organization providing exemplary service. This list is a sample of what we do to retain employees:

- Studies show that people stay in a job where they are successful, and like their manager. We grade our managers on their ability to keep good employees.
- Dispatchers manage people, and employees stay when we have a good dispatcher; we concentrate on this.
- Fair Treatment: Managers who are fair while requiring high standards are appreciated by employees and they like this work environment.
- Keep High Quality Employees: Another way to say this is we remove those who are not producing. All hard working employees appreciate a management team that removes those who are not up to standards (i.e. always late, cause complaints, not safe).
- Pay market wages: We always pay average or above average wages.

- Benefits: Health Insurance is most critical and we also provide vision, dental, vacation and 401k savings.
- Good Training: Employees who are successful enjoy their job and stay there. We provide the tools for our employees to be successful.
- Esprit Décor: Employees stay where they believe they are accomplishing a critical mission. We operate on-time and employees understand this goal and our accomplishments.
- Appreciation: We have employee recognition plans for safety and dedicated service.
- Flexible Work Schedules: We work with our employees and adjust schedules if at all possible.
- Family Atmosphere: Our managers truly value our employees, and they appreciate that.

Today, due to current economic conditions, there is an abundance of available employees in most areas. However, even when unemployment is relatively low, LSF Shuttle has been able to hire and keep good employees because of our best practices and our customer service focus. In fact, in our most recent similar-sized start-ups from a prior contractor in Collier County, Florida and in Pomona, CA, LSF Shuttle was successful in retaining 100% of the previous workforce (more than 90 individuals at both sites).

Human Resources Compliance

LSF Shuttle is fully committed to being the employer of choice for transportation professionals. Company policy prohibits discrimination based on race, color, religion, creed, national origin or ancestry, age, gender, sexual orientation, veteran status, genetic information or characteristics, medical condition, physical or mental disability, or any other consideration made unlawful by federal, state or local laws. We maintain strict compliance with all federal and state employment laws. At a minimum, compliance includes the following:

- Federal Civil Rights Act of 1964
- Federal Immigration and Nationality Act
- Americans with Disabilities Act of 1990
- Equal Employment Opportunity Commission Regulations
- Equal Employment Opportunity

Equal employment opportunity has been, and will continue to be, a fundamental principle at LSF Shuttle and all affiliated companies, where employment is based upon merit. We want to have the best available persons in every job. This policy of equal employment opportunity applies to all policies and procedures relating to recruitment and hiring, compensation, benefits, termination, and all other terms and conditions of employment. To comply with applicable laws ensuring equal employment opportunities to qualified individuals with disabilities, LSF Shuttle makes reasonable accommodations for the known physical or mental limitations of an otherwise qualified individual with a disability who is an applicant or an employee unless undue hardship would result. Any applicant or employee who requires an accommodation in order to perform the essential functions of the job should contact the Human Resources department and request such an accommodation. The individual with the disability should specify what accommodations are needed to perform the job. LSF Shuttle staff will conduct an investigation to identify the barriers that make it difficult for the applicant or employee to have an equal opportunity to perform their job, and will identify possible accommodations, if any, that will help eliminate the limitation. If the accommodation is reasonable and will not impose an undue hardship, LSF Shuttle will make the accommodation.

Harassment Policy

LSF Shuttle is committed to a work environment in which all individuals are treated with respect and dignity. Each individual has the right to work in a professional atmosphere that promotes equal employment opportunities and prohibits discriminatory practices, including harassment. Therefore, LSF Shuttle expects that all relationships among persons in the workplace be business-like and free of bias, prejudice, and unlawful harassment.

Our company stands firm on the belief that everyone employed provides value to our business and will always be a key factor in our success as an organization. To that end, we have adopted an open door policy in order to further demonstrate the value we place on our staff. This means that every manager's door is open to every employee. The purpose of the open door policy is to encourage open communication, feedback, and discussion about any matter of importance to our employees. The company's open door policy means that employees are free to talk with any manager at any time.

Each member of management is responsible for creating an atmosphere free of discrimination. Further, employees are responsible for respecting the rights of their co-workers, clients, consumers, and vendors. A manager or supervisor has the responsibility to address the concern and help our staff members understand workplace practices, processes, and business decisions. If an employee does not feel comfortable discussing his or her issue with their immediate supervisor, the open door policy allows an employee to discuss an issue or concern with the next level or management and/or human resources directly. All managers and supervisors will listen to any workplace concerns and help with resolution or clarification.

Employee Handbook

The employee handbook applies to all employees of the LSF Shuttle family of companies. It provides a guide for all employees of LSF Shuttle in implementing basic human resources policies, such as equal employment practices, open door policy, and others. When combined with the additional policy statements, these documents form our core guidelines for performing daily tasks and achieving common goals for every employee from management to front line staff.

The employee handbook covers all basic employment information, and describes our universal policies and practices. The handbook is designed to provide our employees with information about the policies and the benefits of our organization. In addition to these standard policies, the handbook is customized for each facility operation to reflect the specific individual operating conditions of the facility, including adherence to union requirements and collective bargaining agreements, physical conditions of each facility, and the operational needs of the clients we serve.

The complete employee handbook is provided for your review in the Appendix B at the end of this proposal.

LSF Shuttle believes that a professional appearance, by all employees, is a key component of the operation, and that the appearance of our personnel reflects directly on our clients. Therefore, LSF Shuttle employees are required to report to work with an appearance that is professional, and meets the following dress code standards.

Operator Dress Code

- Company issued polo-style shirt
- Black or khaki full-length work pants, (no jean or denim material is permitted)
- Dark socks

- Black leather shoes, closed toe, with a heel less than one inch.
- A dark colored sweater, jacket, or coat may be worn as needed.

All clothing will be in good repair, stain-free, pressed, and freshly laundered. Shoes will also be in good repair and reasonably polished.

Make-up and jewelry, if worn, will be conservative. Colognes and perfumes may only be used in moderation, as we realize some passengers are sensitive. In addition, the employee's ID badge is considered a part of the uniform and must be worn at all times while on duty, and every operator will have a visible, accurate, working timepiece.

Training Programs

The LSF Shuttle Training Program has been designed by industry experts to address all concerns of operating in a large urban environment. Further, the LSF Shuttle Management Team will work to customize our standard training program to directly address the needs of the City Fixed route services.

Employee Training Program Objectives

LSF Shuttle has developed, through many years of operating transit services, an effective training program that encompasses our best practices. The purpose and objectives of the LSF Shuttle training program are:

- To provide employees with the necessary knowledge and skills to perform their jobs proficiently and in a high quality manner.
- To provide ongoing employee development and training so employees may continuously improve their skills and job performance.
- To provide professional development opportunities to enhance quality of our service, supervisory skills and management capability.
- To provide opportunity for job advancement for all employee.
- To develop a strong safety culture and adherence to LSF Shuttle' proven safety methods.
- To have employees dedicated to the provision of high quality service and achievement of the performance metrics of their department and organization.
- To achieve strong sense of customer service and an understanding of the link between the employee's job tasks and their effect on passenger service.

LSF Shuttle believes that operator training is the foundation upon which safe, dependable vehicle operations are built. Well trained and consistent operators who follow procedures in detail will ensure that buses operate on time and are dependable for our customers. As a leading provider of transportation services nationwide, LSF Shuttle leads the way with industry-proven best practices and comprehensive training programs that improve employee performance and create safe and reliable vehicle services.

Training Program Overview

The LSF Shuttle Operator Education Program (OEP) begins with classroom training before moving to behind the wheel training, additional certification training, and continuous training. Classroom instruction is dynamic and efficiently paced. The daily schedule includes multiple topic changes in order to maintain the interest of trainees. For an interesting classroom experience, our program includes video, graphics, workbook reading and exercises, demonstrations, group and individual exercises, and role playing with multiple opportunities for trainee participation.

Operator Education Program (OEP)

LSF Shuttle has implemented a training program designed to provide comprehensive and thorough training for all of our operators and operations staff. Training is conducted by qualified and certified trainers, as well as senior staff and management for each location. Guest trainers are also incorporated for specific program topics and specialized training opportunities.

The standard operator training program allows for custom elements and modification to meet the needs of our individual operating locations and their clients. Using this flexible design, LSF Shuttle achieves a consistently high standard across all of our operating divisions by ensuring that critical elements of the program are implanted at every location, while specific needs of our clients are also addressed with contract-specific training.

The LSF Shuttle training program is a minimum of 80 hours in length, including 40 hours of classroom learning and at least 40 hours of behind-the-wheel learning. Additional program elements provide additional training hours. However, effective training is not judged only by hours spent in class, but rather the content of the program itself. To ensure the highest quality program, LSF Shuttle has utilized several respected industry resources to build our program, including the U.S. Department of Transportation, Transportation Safety Institute, Community Transportation Association Passenger Service and Safety (PASS) and Avatar Management Services.

A summary of the LSF Shuttle Operator Education Program components is provided in the table below:

Exhibit 3 – Operator Training Program

Day	Category	Module	Description	Hours
1	Classroom	Introduction	Welcome & Expectations	1
	Classroom	Company Policies & Procedures	Employee Handbook	2
	Classroom	Vehicle Operations	Vehicle Introduction & Operator Manual	3
	Classroom	Project Specific Training	Customized for Every Property	2
2	Classroom	SEE#1	Safety is Every Employees #1 Responsibility	2
	Classroom	First Aid & CPR	Red Cross Certification	6
3	Classroom	Customer Care	Based on START Customer Service Program	8
4	Classroom	ADA/Passenger Sensitivity	Based on CTAA PASS Training Program	8
5	Classroom	Defensive Driving	Based on Smith System	8
			Total Classroom Instruction	**40**

Day	Category	Module	Description	Hours
6	Behind the Wheel	DVIR Training	Pre-trip Inspection Training	4
	Behind the Wheel	Securement Training	Complete Hands On ADA Training	4
7 & 8	Behind the Wheel	Closed Course Training	Vehicle Familiarization & Skills Development	16
9 & 10	Behind the Wheel	On-Road Training	Emphasize Defensive Driving & Skills Testing	16
11 to 20	Behind the Wheel	Cadetting	Real World Testing & Evaluation	40
			Total Behind the Wheel Instruction	**80**
			Total Instruction	**120**
Additional Training				
	Continuous	Safety Meetings	Monthly Refresher Training	2
	Continuous	Road Supervision	Active On-Run Supervision & Evaluation	Varies
	Continuous	Refresher Training	Additional or Reminder Training	Varies
	Continuous	Corrective Re-Training	Specific One-on-One Fitness Evaluation	Varies
	Continuous	Certification Training	Additional Training for Certifications	Varies

Corporate Training Support

LSF Shuttle directly supports our local training programs with two dedicated corporate support positions. Our Senior Vice President of Safety and Risk Management, Mr. Drew Jones provides oversight and direction for all safety and training programs to all our local facility operations. He ensures that LSF Shuttle and LSF Shuttle policies are followed, and also makes sure that all operating facilities meet and/or exceeds legal or regulatory requirements of local, state, and federal agencies. In a supporting role as East Region Human Resources Manager, Ms. Jessica Restrepo assists local general managers and training staff to recruit and qualify the best operator candidates possible. Both of these highly experienced senior staff are always prepared to assist local staff throughout our service area.

LSF Shuttle Training Staff

The majority of the training program is delivered by our corporate certified safety trainer with the direction and support of the local general manager, and the assistance other senior location staff. Corporate support is provided to every local operating property for assistance in delivering the LSF Shuttle OEP. All safety trainers are required to be certified Red Cross First Aid and CPR instructors; certified Transportation Safety Institute Transit or Paratransit Trainer; certified DMV Employer Testing

Program Examiner; maintain a commercial driver's license with passenger endorsement certificate in good standing; and maintain a current medical certificate.

Training Program Overview

Transportation Operations

The operations training session provides general instruction to operators about the vehicles they will operate, and both the general and specific operating conditions of the property. An introduction to the vehicle includes classroom descriptions and hands on inspection and demonstration of the major vehicle systems. Typical components discussed are the engine, steering, brakes, operator controls, doors, safety windows, lift equipment, securement devices, safety equipment, radio, and fare media and procedures. Training is focused on how the transit vehicle differs from a private automobile and the specific procedures required that ensures they are operated safely. Basic operations training topics include:

- Attendance policies/call out procedures
- Work schedules
- Report for duty procedures
- Run and manifest development
- Required operator equipment
- Daily vehicle inspection report (DVIR)
- Radio operation and etiquette
- Fare collection and fare envelope operation
- Map reading
- Dispatch operations
- Vehicle fueling
- Defensive driving training

The backbone of our safety program is the emphasis on defensive driving skills for every operator. Using the LLLC Defensive Driving Program, every LSF Shuttle location teaches operators the core defensive driving fundamentals of space, visibility and time. Commercial operators can go their entire professional lives without an accident, and defensive driving is a proven factor in creating safe vehicle operations.

Our defensive driving course teaches operators the four critical elements of defensive driving: Look Ahead; Look Around; Leave Room; and Communicate. This critical course teaches operators how to recognize and avoid dangerous situations. We teach that any accident, no matter how small, puts operators themselves, passengers, and the general public at risk. The basic classroom defensive driving program includes classroom instructions, DVDs, and various testing materials. Behind the wheel instruction reinforces classroom instruction.

Course topics include:

- Vehicle stopping distances
- Vehicle backing
- Blind spots
- Steering methods
- Curves, intersections and turning
- Railroad intersections

- Parking lot procedures
- Freeway driving and merging
- Following distances
- Lane changes
- Night driving
- Weather conditions
- Curbs and fixed object
- Project-specific training

LSF Shuttle supplements our complete standardized operator training program with specific training geared to the needs of the individual service provided at each operating property location.

For LSF Shuttle, operating Community Shuttle services in the City of North Miami, within the operating environment of Broward County requires outstanding operator/driving techniques to manage through inclement weather. Operating vehicles within an environment of inclement weather such as torrential downpours, high winds, and sharing the road with other operators during these events, requires concentration and specific location training to ensure our passengers are delivered safety to their destinations.

Specific examples of customized operator training elements include subjects like: operating hours, days and services; passenger eligibility; fare collection policies; passenger assistance rules; trip reservations, scheduling, and cancellation policies; service area guidelines; uniform standards; and other program areas as needed. Our goal is to provide an exceptional operator education program that provides the highest quality and safest transportation experience for the City and its riders.

Behind the Wheel Training (BTW)

Classroom training provides the foundation for becoming an excellent LSF Shuttle operator. Along with specific location training course set ups, our BTW training builds on that foundation with practical, hands on instruction and skills development. Specifically, all BTW training emphasizes correct defensive driving techniques. Elements of the LSF Shuttle BTW training program are described in the following paragraphs.

Daily Vehicle Inspection Report (DVIR) Training

All operators receive training on how to properly perform the process. DVIR Training includes a full walk-around inspection of the vehicle exterior and interior using a comprehensive checklist. DVIR Training includes a full explanation and walk through of the vehicle maintenance process to show how the DVIR process contributes to the overall vehicle maintenance program. Procedures are explained and demonstrated for safety sensitive conditions that require immediate repair and "downing" of a service vehicle, as well as minor repair items that must be noted for future repair. Each checklist item is demonstrated and explained in detail and every operator is tested for proper performance of the checklist items, and understanding of their importance for safe vehicle operation. DVIR Training includes the gate check process which confirms that every operator has performed the DVIR, is properly equipped for their shift, and is carrying their required driver's license, endorsements, certifications, medical card, etc.

Closed Course Training

Operator skills training starts with training on a closed course and includes the introduction and practice with basic vehicle maneuvers and operations to familiarize operator with the larger size, slower speed,

slower reaction and larger spacing of commercial vehicles before driving the vehicle on the street. Closed course training occurs on private property using large paved spaces and skills course set up using cones and barriers.

The skills course requires all trainees to learn the use of multiple mirrors, vehicle steering, braking, and acceleration, and emphasizes how to safely maneuver the vehicle in both forward and in reverse. The skills training program allows our trainers to identify potential deficiencies in students and apply additional training or supports to improve their performance or remove students from the training program when they cannot meet our demanding standards. The closed course training teaches the following skills:

- Judgment stops
- Emergency maneuvers
- Following distance
- Right and left side backing
- Right turns and left turns
- Left turn one way to one way
- Parallel parking
- Customer stop
- Loading zones
- Railroad crossings
- Drive through
- Back through
- Serpentine
- Securement Training

During BTW training, LSF Shuttle provides thorough hands-on experience with securing mobility devices for every operator. Demonstrations and hands on practice meet all ADA requirements. During Securement Training, critical attention is paid to ensure that each mobility device is properly secured, and to make sure the customer enjoys a safe ride. The focus of this training is to secure the mobility device at strength positions; the operator will never attach securement straps to spokes or other loose components. Equally important is making sure shoulder belts and lap restraints are also properly used for every passenger. We teach the following securement procedures:

- The vehicle must be parked at the curb
- The vehicle transmission in park
- The vehicle parking brake engaged
- The vehicle interlock operational
- The operator deploys the lift according to specific lift procedures
- The operator assists the passenger in boarding the lift
- Passengers ride the lift facing away from the vehicle
- The operator ensures mobility device brakes are engaged
- The operator ensures the passenger lap belt is secured
- The operator ensures the lift safety strap and barrier are engaged
- The operator communicates to the passenger that lift operation will begin
- The operator raises the lift to its complete up position

- The operator allows the passenger to maneuver into position in the vehicle, assisting as necessary.
- The operator requests permission to secure the mobility device
- The operator secures the mobility device at strength positions
- The operator requests permission to place shoulder and lap restraints
- The operator secures shoulder and lap restraints
- The operator notifies the passenger that they are ready to depart

One of the final tests within the training process is to place the trainee into a wheelchair, and utilize other trainees to load, secure and operate the vehicle with the trainee on board. This practice provides a real-life experience for the trainee of how an impaired rider will experience the trip on board a Community Shuttle vehicle.

On-Road Training

Once a student has successfully completed all skill course maneuvers during closed course training, operators begin on-road instruction under the supervision of training staff. The focus of this training is on practicing and reinforcing the defensive driving with actual on the road practice. During On-Road Training, each operator is presented with extensive time behind the wheel to experience as many real world driving situations as possible. In addition, each LSF Shuttle location uses a specific testing run that presents each operator trainee with all the commercial operator drive test scoring challenges. To complete on-road training, LSF Shuttle operators must demonstrate mastery of defensive driving, emergency procedures, and all technical driving skills.

In Service Training

Upon completion of On-Road Training, new operators are assigned to a training "mentor", an experience current operator with the skills to provide one on one testing and review of the trainee's actions while operating a training run. The training run will typically be on a weekend, with less than 15 pick-ups and drop-offs, to allow the new operator time to build their skills. Operators will operate the vehicle, become familiar with operations of the vehicles, securement devices, lift operation, and interact with passengers on a practical level. Operators are expected to follow all the same procedures and perform the same functions as regular mainstream operators, and are monitored constantly by the mentor trainer or road supervisor staff member who rides along on the run to provide supervision and training reinforcement.

During in-service training, operators are evaluated and tested frequently. Before an operator is approved for transfer to revenue service, supervisors evaluate their knowledge of operational policies and procedures. In addition, supervisors evaluate operator attitude regarding traffic or stress, customer courtesy, passenger sensitivity, defensive driving, and safe vehicle operations.

SEE#1 Safety Training

Training begins with our number one core value, safety. The first and top priority message for all LSF Shuttle employees is that Safety is Every Employee's #1 Responsibility (SEE#1). Above all other concerns, our employees are instructed that they must accept responsibility for their own safety, as well as the safety of everyone around them, including coworkers, passengers, and the public. Our policy teaches the trainee the three priorities of service; Safety as number one, then Customer Satisfaction, and finally Efficiency. In any situation, decisions are made using these priorities in order.

This element of classroom training is a wide ranging discussion of safety procedures that include:

- Personal safety
- Injury prevention
- Accident prevention
- Drug and alcohol testing program
- Emergency procedures
- Hazard communication
- Injury reporting
- Accident reporting

Supervisory Training

Supervisors must understand the importance of the people they lead. They must promote professionalism and direct the employees under them. They must analyze the performance of the system and look for ways to increase efficiency and to encourage the highest standards for safety and customer service. Additionally, we utilize our proven technical continuing education process to develop skills such as evaluating performance, measurement skills, motivation, leadership and determining the strength and needs of individual employees.

The preliminary supervisory training that all road supervisors must receive prior to beginning their duties is comprised of eight hours of classroom training, followed by an additional eight hours of on-the-job training shadowing an experienced road supervisor.

Company Policies and Procedures

This element of the training curriculum is our opportunity to describe and review the comprehensive LSF Shuttle policies and procedures which govern the employment relationship between the company and the trainee, and also govern continued employment status. The major components of this training include a site tour and facility orientation, and instruction using the LSF Shuttle employee handbook and the operator manual.

The employee handbook covers every major topic of employment with LSF Shuttle. It governs the employee/employer relationship for all LSF Shuttle employees, and contains all basic regulatory and employment law provisions. The employee handbook is a standard document across all of LSF Shuttle operating properties. In contrast, the operator manual is a highly customized document which details the specific operating procedures and requirements for each individual LSF shuttle operating property. The operator manual includes customized descriptions of operator duties and responsibilities which apply to specific transportation services operated at the property.

Customer Service Training

Operators are the face of our transportation service because they represent both the City and LSF Shuttle to riders every day. Since passengers interact with operators more frequently than any other transportation staff member, LSF Shuttle emphasizes providing excellent customer service throughout our operator training program. In this training module, LSF Shuttle provides instruction that complements our comprehensive Customer Care program, and includes the Customer Focus training described below.

As a company that makes its mission "To be the best transportation company", it is not surprising that LSF Shuttle' core values are safety, customer focus, employee oriented, integrity and responsibility, and accountability. Our customer focus program is a six hour interactive session dedicated to impressing these LSF Shuttle values on our employees in the context of customer service. Through our customer focus program, employees are provided customer service instruction and practice through transit specific role play and self-awareness assessments.

The following is a brief outline of our customer focus training course elements:

- Review of company vision, mission and core values
- Who are our customers?
- LSF Shuttle customer service
- What is in it for LSF Shuttle?
- What is in it for you?
- Customer service delivery
- How to remain in control
- Let's practice!
- Self-assessment
- What have we learned?

A primary piece of our customer service training is our introduction to the LSF Shuttle customer service training. It focuses on the three principles we base our customer service philosophy on.

- Attention. You must pay attention to every customer. Look at your customer when they board the vehicle and greet them with a "Hello", "Good Morning," "Good Afternoon" or "How are you doing?"
- Respect. Every customer deserves our respect. You don't necessarily have to agree with the way the customer says things or even the way they dress but because they're one of our customers they deserve respect.
- Timeliness. Every customer deserves our response and our help in a timely manner. As an operator, if a passenger boards with an incorrect fare, or an expired transfer, it's your responsibility to inform that passenger in a timely manner.

The core message of the LSF Shuttle Customer Care Program is satisfaction judged solely by the passenger. When approaching any event or situation, our operators and staff can have a positive, neutral, or negative impact on how that event or situation is perceived by our passengers. Our customer care program goal is to make every customer interaction a positive one.

We deliver this core message in a way that empowers our operators and staff to be pro-active; to take the best action to resolve issues quickly; and to communicate empathy and understanding with passengers. These skills are taught to each operator as they learn to identify and use various communication techniques, and how to best communicate effectively with the public. The program addresses basic guidelines of quality customer service in a transit setting, and our standards of what it means to be a professional operator.

LSF Shuttle provides detailed instruction to help operators understand the part they play in providing and promoting a positive passenger experience. This training helps operators overcome common negative mindsets that can make the job unnecessarily difficult.

The program teaches operators:

- How and why to make customers feel welcome
- Keeping it positive - nonverbal communication
- Understanding and following rules, policies and guidelines
- How to make good decisions about exceptions
- Establishing professional boundaries with customers
- Conflict avoidance - letting it go
- How and when to call for assistance
- How to manage schedules and time pressures
- Mature and positive communication with co-workers and management
- Communicating with customers during emergencies and other difficult situations

ADA/Passenger Sensitivity Training

LSF Shuttle understands the importance of treating all passengers with respect and understanding. In particular, we emphasize providing high quality service for seniors and passengers with disabilities. The Sensitivity and ADA Compliance Training Program ensures that LSF Shuttle personnel are trained to operate vehicles and equipment safely and to properly assist and treat customers with disabilities who use the services in a respectful and courteous way. This training focuses on appropriate attention to the differences among customers with disabilities, in compliance with the ADA.

The purpose of the Sensitivity and ADA Compliance Training is to increase awareness of disability issues and to introduce exercises that promote passenger sensitivity for every LSF Shuttle employee. As a part of this training program, members of the disability community are invited to certain training segments to present real-life stories that reinforce the training experience.

The intended audience for the Sensitivity and ADA Compliance Training are the following members of our service provision team:

- General manager
- Operations managers
- Safety and training managers
- Street supervisors
- Vehicle operators
- Facility and radio dispatchers
- Schedulers
- Any other employee with regular contact with the ADA passengers being served by the City

Training Methodology

The training modules are supported by a variety of tools to reinforce learning such as lectures, assessments, videos, role-playing, group discussions and handouts. At the outset of the training and before the video, participants will be asked to discuss and reflect on what sensitivity means to them, what respect means to them and discuss the ways in which their lives have been enriched by providing good customer service to people with disabilities. At the end of the video, participants will discuss what operators should do when situations occur that are out of their control, such as issues concerning weather conditions, bus malfunctions, wheelchairs that are difficult to secure, unruly customers, unruly

service animals and fare payment. We will also discuss the obligations of LSF Shuttle staff where ADA regulations apply.

First Aid and CPR

In recognition of safety as our top corporate priority, all LSF Shuttle operators are trained and certified in Red Cross First Aid and CPR. Each LSF Shuttle trainer is a certified Red Cross First Aid and CPR instructor and provides the training, examination and certification for our operators. The Red Cross First Aid and CPR course provides our operators with the knowledge and skills necessary to recognize and provide basic care for breathing and cardiac emergencies as well as how to respond to sudden illness or injuries. Operators must successfully complete all required skills and pass a written examination with a score of 80% or better to receive Red Cross training certificates.

American Red Cross
Together, we can save a life

Continuous Training

Once operators graduate to revenue service, we provide ongoing and frequent training opportunities. Through both regularly scheduled training, or on an as needed basis, LSF Shuttle is committed to the successful and safe performance of all operators over the long term.

Safety Meetings

A regular schedule of mandatory safety meetings are conducted at every operating location. Held at least once every month, safety meetings are our opportunity to provide our operators with new information, the latest safety techniques, and additional training on company policies. Above and beyond this monthly safety training, our monthly safety initiative is continuous, including; posters, supervisor talking points, training DVD and safety messages.

Road Supervision

Dedicated road supervisors provide the oversight necessary to ensure operators are performing at their best when they are in revenue service for our customers. Road supervisors perform the critical task of annual operator evaluations that include safety, defensive driving, and customer service evaluations. In addition, they maintain relations with agencies, staff, and riders and provide the backup support to ensure service quality throughout revenue service.

Refresher Training

Whether based on annual operator evaluation, observations from road supervisors, customer comments, or upon request of the operator, LSF Shuttle provides refresher training for all operators on an as needed basis. Refresher training allows any operator to return to any area of our comprehensive training program to re-learn or reinforce the standards and techniques that make a professional LSF Shuttle operator. From time to time, specific trends or problem areas are identified at an operating property and refresher training is provided to all operators on a particular subject area. Refresher training is also provided to all operators for professional growth or to learn new skills.

Corrective Re-Training

Corrective re-training is provided for individual operators using a one-on-one instruction process that allows instructors to focus their time and attention on particular operator behaviors or improvements. Operators are evaluated at least annually, and corrective re-training is provided to any operator that does not meet safety or customer service expectations. Additional triggers for corrective re-training include accidents, injuries, negative customer comments, excessive absences, or other reported incidents. Operators that receive corrective re-training are re-evaluated for job suitability, and evaluations are documented in operator training and employee files.

Certification Training

In addition to the basic training programs, one of the strengths is to provide operators with the skill sets to provide advanced acknowledgement and in many case, enhanced compensation, by development of "Mentors" and "Certified Trainers" in disciplines regarding operational on road service delivery. Our goal to develop strong "senior operators" is paramount to the development of a professional proficient workforce and to identify individuals with the skill sets to take on additional responsibilities, who have the sense of training and mentoring skills, to provide their knowledge, experience and strong customer service skills to a new or less experienced operator.

Dispatch and Call Center Training

For some transportation services, communication by telephone is the most common contact between our staff and our riders. We understand telephone contact with our staff can make, or break, the customer's perception of the service they receive. Our focus when selecting and hiring dispatch and call center staff is to attract empathetic and caring individuals – people with full understanding and compassion for our passengers who depend on our services and may have special needs or who may be elderly or disabled.

Call Center Skills Training

To ensure a sensitive and positive customer interaction, LSF Shuttle uses industry-proven skills training, which focuses on providing a kind, caring and empathetic approach to call taking by call center agents. This comprehensive employee training program, which includes audio tapes and a workbook, provides all of our operators with valuable basic customer service skills training. The basic focus of this training is how to properly communicate with customers on a variety of common topics. The primary components of the program include:

- The communication process
- Communication fundamentals
- Developing an effective greeting
- Treating the customer right
- Making a great impression
- Selling yourself
- Personal protection
- How and when to ask for help

This all-inclusive customer service skills training encourages our operators first to understand and empathize with the needs of our passengers, and second gives them the tools they need to respond effectively and meet those customer needs.

Customer Service Refresher Training

In addition, LSF Shuttle has implemented a comprehensive and recurring training program for customer service agents and dispatchers, to focus specifically on providing exceptional customer service for our many clients and customers. This program, titled "Professional Customer Service" is designed to reinforce the best practices in use throughout our transportation reservations and technology-based call centers. The result is an improved experience for customers when they call for reservations, and improved job satisfaction for our many talented customer service agents.

Telephone Doctor® Training

True customer service begins with communication. In addition to the call center training programs in place, LSF Shuttle uses the "Telephone Doctor" customer service training program to improve our basic communication techniques, especially over the phone. This training program is provided to dispatchers, call center agents and office staff. It is web-based and interactive for two and a half hours, and provides valuable information to improve the way our staff communicates with our riders and other customers. The concepts are presented in a common sense fashion, with situational and role-playing used throughout the program. The complete training program covers the following topics:

- **The Service Mentality**: Identifies and highlights basic characteristics and traits of people who demonstrate excellent customer service.
- **Determining Needs**: Listening Skills and Questioning Techniques; How to become an effective listener; Internal and External Communications
- **Changing Perception**: Learning non-visual communication; Finding the right attitude on the phone
- **Coaching Skills**: Ways to improve performance; Difference between training, coaching and counseling; Developing managers and supervisors
- **Five Forbidden Phrases**: What they are and how callers will react; Changing the message to achieve your desired results
- **Six Cardinal Rules of Customer Service**: Humorous real-life examples of what to do (and what not to do) when faced with common situations
- **Proactive Customer Service**: Building rapport with regular callers; Providing adequate information the first time
- **The Welcomed Guest**: Employees on the phone are ambassadors of the company; Enhancing their ability to represent the service well

Maintenance Training

Throughout our companywide transit operations today, we have more than 50 technicians providing exceptional vehicle maintenance services. We employ A, B, and C qualified technicians, always with an eye to training the less skilled employee up to an A classification. The difference between LSF Shuttle and our competition is our people. We see our maintenance staff as a valuable asset, and we believe in investing in each employee's training and growth. We have developed an extensive training program for our technicians, service workers, parts clerks and supervisors.

Our philosophy is to pinpoint the training needs of the individual and avoid the "shotgun" approach to training. We do not train every technician in every area, but deliver only the training that each technician needs and will use. We have formed strategic alliances with our national and local vendors to provide specialized training on specific vehicle components and systems. The vendors we work with

regularly to train our technicians include: AC-Delco, Allison Transmission, Bendix, Carrier, Caterpillar, Cummins, Ford, GMC, Navistar and Thermo King.

Each technician is given the opportunity to participate in planned, regional and national training seminars conducted by various equipment and vehicle manufacturers. This opportunity is offered as an additional incentive to enhance knowledge, reduce turnover, and provide for a greater knowledge base for the service needs of the Community Shuttle vehicles.

5. Methodology, Transition and Approach to the project

Project Understanding

Because we are currently operating this service, LSF Shuttle has in place the necessary resources available to continue meeting all of the requirements of this new contract. We are not merely "promising to put in, or purchase systems that may or may not work" our systems are in place and they work. We have a proven track record. LSF Shuttle has the experience, qualifications and capability of personnel that far exceeds any other company in providing community transportation services. Currently, we operate more community transit services in South Florida than all of our competition combined. Clearly, we exceed all qualifications and experience necessary to safely and reliably operate the City's services.

Transition

Because LSF Shuttle is the current operator of the City's Shuttle Services, there will be no need for start-up mobilization or a transition period of any kind. By selecting LSF Shuttle, the City is guaranteeing that there will be no adverse impacts from the transition to a new contract.

LSF Shuttle will maintain the high quality service that we are already providing, as described in our management plan below.

Firm Facility Location

LSF Shuttle facility is located at 3300 SW 11th Ave – Ft Lauderdale, FL 33315, which is less than 30 minutes away from the City's offices. This facility will serve for both vehicle maintenance and bus storage.

The deadhead distances from the location to the beginning of the route for Routes 1, 2, 3, & 4 do not exceed 18 miles or 32 minutes and the City of North Miami will continue to benefit from the shared resources at our location, including our regional support staff whose head office is in this facility.

Vehicle Description

LSF Shuttle will continue to use the five (5) vehicles already in operation for the Community Transportation Services. These vehicles are owned by Keolis:

- Vehicle Number: 279 – Cutaway bus – 2013 Chevy El Dorado – 20 + 2 – New Vehicle – the vehicle is wrapped per North Miami contract – bus has FleetMatics GPS installed – No 2-way Radio – Diesel Fuel
- Vehicle Number: 280– Cutaway bus – 2013 Chevy El Dorado – 20 + 2 – New Vehicle – the vehicle is wrapped per North Miami contract – bus has FleetMatics GPS installed – No 2-way Radio – Diesel Fuel

- Vehicle Number: 281– Cutaway bus – 2013 Chevy El Dorado – 20 + 2 – New Vehicle – the vehicle is wrapped per North Miami contract – bus has FleetMatics GPS installed – No 2-way Radio – Diesel Fuel
- Vehicle Number: 282– Cutaway bus – 2013 Chevy El Dorado – 20 + 2 – New Vehicle – the vehicle is wrapped per North Miami contract – bus has FleetMatics GPS installed – No 2-way Radio – Diesel Fuel
- Vehicle Number: 403– Cutaway bus – 2008 Ford E450 – 20 + 2 – Old Vehicle – Vehicle is not wrapped (White bus) – bus has FleetMatics GPS installed – No 2-way Radio – Diesel Fuel

One (1) spare vehicle will be available from the LSF Shuttle fleet.

Vehicle Maintenance Program

Daily Vehicle Inspection Reports (DVIR)

Operators are responsible for performing vehicle inspections before and after the end of each shift. Beyond a simple safety inspection, this DVIR checklist is designed to spot maintenance needs early, and address them before they become major repairs. Before the start of each revenue service shift, the operator completes a full walk-around exterior and interior vehicle inspection. Items checked on the DVIR forms include all safety equipment, road worthy features, and operator and passenger convenience equipment.

The DVIR checklist forms are completed in duplicate so that a copy of each daily inspection checklist is retained in the vehicle, while the original checklist is turned in to the maintenance department for review. Any minor defects are noted for future repair, while any road worthy or safety equipment defects are immediately reported to dispatch and the vehicle is placed out of service. Minor defect reports are documented in the vehicle file and CollectiveFleet Pro system for repair at the next scheduled PMI, where all minor defects are corrected.

The DVIR process is a critical element of our complete maintenance program. Because this process is so important, LSF Shuttle uses both gate checks and supervisor observations to ensure compliance with our DVIR program. Supervisors routinely walk the yard and observe operators while they perform their DVIRs, often identifying deficiencies and corrective actions, but most importantly, reinforcing best practices as they "catch" operators performing DVIRs correctly. To ensure daily DVIR compliance, supervisors and managers perform a daily gate check before each vehicle leaves the yard. The gate check confirms that every operator has performed the DVIR, is properly equipped for their shift, and is carrying their required driver's license, endorsements, certifications, medical card, etc.

Minimizing Downtime

The single best way to minimize vehicle downtime is to adhere to the requirements of a strict, proven Preventive Maintenance (PM) program, including the enforcement of timely PM inspections.

Despite the best efforts to keep a fleet in prime operating condition, breakdowns will invariably occur. An important element of the operational program is to replace the vehicle immediately and then determine the cause of the breakdown quickly. If the origin of the problem can be diagnosed quickly, technicians can spend more time thoroughly repairing the problem. For the City of North Miami, this means downtime is kept to a minimum.

The diagnosis of the breakdown will begin by interviewing the operator to determine the circumstances surrounding the breakdown.

Preventive Maintenance Inspection Program

Preventive Maintenance Inspections (PMIs) are the foundation of a comprehensive and effective vehicle maintenance program. The PMI process is designed to protect the capital investment in the fleet, ensure fleet availability, and maintain safe operating conditions. First and foremost in planning all maintenance activities is the availability of vehicles to meet service requirements. In particular, LSF Shuttle performs the majority of PM inspections when there is the least impact to operations. Our goal is to have vehicles in service during peak hours of operation.

Of equal importance is the currency of Preventive Maintenance Inspections. LSF Shuttle continues to schedule and follow-up on all PMIs in order to maintain 100% PMI currency. The LSF Shuttle PMI program is scheduled using the CollectiveFleet Pro software using a 3,000 mile or 30-day service interval. Odometer readings from operator trip sheets are entered into CollectiveFleet Pro daily, and confirmed each time the vehicle enters the shop. Based on these odometer readings, vehicles are scheduled for a PMI when they meet either the mileage of time thresholds. And because it's automated, a vehicle cannot be overlooked or missed in the PM schedule cycle. A schedule of PMIs due within the next 30-day period is generated automatically on the 15th day of the preceding month. Both operations and maintenance staff are notified by the CollectiveFleet software to schedule the vehicle for service so that the vehicle can be removed from the operations schedule in time to meet the required PMI appointment.

PMIs are conducted on a schedule of A, B and C services, where A services are performed every 3,000 miles or 30 days. The B services are added to the standard A service at 24,000 miles and the C service is added to the A service at 100,000 miles. A description of each PMI service is provided in the table below, and additional detailed PMI inspection sheets and maintenance forms are provided for your review at the end of this section.

Exhibit 4 – Preventive Maintenance Schedule

Service Type	Service Interval	Service Items
"A" Service	3,000 Miles or 45 Days	▪ Lube, Oil and Filter Change ▪ Under Hood/Engine Compartment Inspection ▪ Interior Inspection ▪ Exterior Inspection ▪ Brake Inspection ▪ Lift Inspection & Service
"B" Service	24,000 Miles*	▪ Transmission Service – Fluid and Filter Change
"C" Service	100,000 Miles*	▪ Vehicle Tune-Up ▪ Differential Service – Fluid Change

* "B" and "C" Services are performed in addition to and during an "A" Service

During the PMI, the technician reviews the vehicle file and all previous PMI reports as well as the vehicle repair summary, which shows the comprehensive repair and PMI history for the life of the vehicle. This critical step in the process allows the PMI to become both a critical safety element and an efficient maintenance program. First, reviewing the vehicle repair history allows the technician to identify and correct repeated repairs and address safety concerns (such as repeated brake or interlock failures, for example), even if they have no personal history with the vehicle. Second, the file review allows for repairing minor defects identified during the Daily Vehicle Inspection (DVI) process, and encourages pro-active component replacement where worn or suspect parts are replaced during the PMI when the vehicle is already out of service and before they cause a service disruption. All defects reported through DVI or identified during the PMI are completed before the vehicle is returned to service.

Exhibit 5 – PMI Checklist

Limousine Of South Florida Bus
Preventative Maintenance

L.S.F Series

FLL ___ BUS #

___ LAST 5 OF VIN#

CODE: [ ] OK; [X] Additional Work Required (Record line item # and explanation on reverse side); [N/A] Not Applicable

Schedule: (TYPE) (MILES) (HRS) (DAYS) LSF+ 3,000 500 45

Date __/__/__

MILEAGE _____

ENGINE HOURS _____

I. DRIVE ON (check operation and/or combination of components.	CODE	INIT.
1) Wash engine compartment including radiator, battery area & wheels (note: secure vehicle property.)		
2) Test operation of starter.		
3) Check warning devices including low air warning & back-up alarms.		
4) Test steering wheel play.		
5) Check operation of all interior & dash lights and switches.		
6) Check all dashboard gauges for operation.		
7) Check fast idle switch for operation.		
8) Check operation of heater include blower and controls.		
9) Check operation of A/C including blower and controls.		
10) Check all hand-electric & air.		
11) Check all safety equipment including reflectors & fire extinguisher.		
12) Record inspection date of extinguisher __/__/__		
13) Check operation of drivers seat, seat belt & lube seats.		
14) Check operation & condition of wipers, arms, blades & refill washer.		
15) Test parking brake operation.		
16) Test foot brake & interlock operation.		
17) Check & record air governor operation.		
18) Cut out _____psi. Cut in _____psi.		
19) Record maximum engine rpm _____.		
20) Record oil pressure/ high idle _____psi.		
21) Check condition of accelerator pedal.		
22) Use 1 min. test for air leak w/ brakes applied.		
23) Check cleanliness & condition of interior.		
24) Check condition & mounting of all seats, stanchion racks & grab rails & seat frames.		
25) Check condition of all interior emergency exits including decals.		
26) Check condition of safety line & decal.		
27) Check operation of the kneel system.		
28) Check condition & oper. oper. windows, latches, shades, screens, visors & tracks.		
29) Check operation & condition of doors.		
30) Check door touch bar & sensitive edges for condition & operation.		
31) Check the engine door for leaks & oper.		
32) Check the passenger buzzer for sound.		
33) Check floor & covering for looseness & condition include stepwells.		
II. SERVICE		
34) Test all exterior lights include 4-way & turn signal flashers.		
35) Secure vehicle property & use lockout/ tagout pouch.		
36) Check condition of mirrors include brackets & fasteners.		
37) Check & report body condition or repair.		
38) Check condition of bumper, mug flap & brackets.		
39) Check headlamp for adjustment (high/low).		
40) Check oil & transmission fluid change external transmission filters.		
41) Drain fuel/water separator & change fuel filters DAVCO filter should be changed		
42) Drain engine crankcase. Replace filter prior to installation.		
43) Clean & reinstall crankcase magnetic drain plug. Torque to manufac. specs.		
44) Check coolant level & record freeze point _____. Verify coolant type before adding 50/50 blend.		
45) Test supplemental coolant additive level of conventional antifreeze systems only. Record _____ppm.		
46) Check condition of coolant & fill cap. Pressure test cap & cooling system to related pressure. Check for leaks & hose condition while under pressure for 30 min.		
III. UNDERCHASSIS & LUBE		
47) Check steering assembly, column & U-joints for looseness.		
48) Pitman Arm & nut for loosen or missing.		
49) Tie rods & drag link loose clamps & nut.		
50) Check king pin for wear & movement.		
51) Check front axle assembly for condition and looseness.		
52) Inspect all sway bars & linkage for condition & looseness.		
53) Inspect front & back springs, shocks, airbags, U-bolts, center pin, equalizer, torque arms, brackets, leveling valve, leakage for cracks, loose bolts & wear.		
54) Inspect all lines, fittings, mounting for looseness & cracks.		
55) Inspect brakes, drums, check wheel seal for leaks.		
56) Inspect brake chamber mounting for looseness & cracks.		
57) Check & adjust brakes w/ manual slack adjusters.		
58) Check travel only with automatic slack adjusters.		
59) Check drive shaft, U-joints, slip joints for play, yoke shaft nuts, bolts, lockguard.		
60) Check differential bolts, gaskets, seals pinion bearing play. Check oil level & units		
61) Check transmission for leaks. Check/ clean vent, inspect cables, housing, wiring, connections & hardware for tightness/condition.		
62) Inspect air dryer & drain air tanks.		
63) Check fuel tanks & lines for leaks, mounting & condition.		
64) Inspect crossmembers, frame for cracks, wear & loose bolts.		
65) Lube complete unit replace defective fittings.		
IV. UPPER CHASSIS ENGINE & ELECTRIC		
66) Inspect exhaust system for mounting & condition include muffler & pipe.		
67) Inspect fuel lines for cond. & leaks.		
68) Check power steering fluid level.		
69) Inspect all visual belts & engine mtg.		
70) Inspect fans shroud for cracks.		
71) Inspect water pump for wear & leaks.		
72) Inspect all belts cracks, check tension with tension gauge.		
73) Check A/C & air compressor mounting bracket, lines & wires.		
74) Check alternator mounting, bracket & wiring.		
75) Inspect all air intakes/HVAC ducting for condition & leaks. Change HVAC filters.		
76) Check air filter minder max 15" change filter if exceeded/removed.		
77) Inspect all wiring & battery cable routing, hold downs & mount box.		
78) Inspect engine compartment lights, switches & wiring for condition/operation.		
79) Inspect rear bumper/underride for damage & firmly attached.		
80) Inspect battery & perform peak test.		

Vehicle Washing

A clean vehicle displays professionalism and demonstrates the quality of service. It is LSF Shuttle responsibility to ensure City vehicles are kept clean and serviceable. Standard procedure is to clean the interiors at a minimum of once daily and to wash the exterior on an as needed basis. We also disinfect the vehicles on a weekly basis, to ensure a clean, healthy environment. Additionally, we provide pest control treatment utilizing a process that does not have an odor or film, and will not be noticeable to the passenger.

Reporting and Communications

Monthly, weekly, and daily management reports are prepared, reviewed and submitted by our General Manager, Mike Rosson. Each report is reviewed to ensure completeness, accuracy, ease of data collection. Reporting includes basic standard reports currently in use by the City of North Miami today as well as any additional reports that LSF Shuttle and staff determine are necessary to effectively manage the Community Transportation services.

Daily incident reports, monthly incident reports, overall safety compliance reports, and other operational measurement reports have been developed and customized in keeping with accepted industry standards and City-required reporting documents. All reported incidents which are of an emergency nature or considered a media-worthy event receive elevated attention and response from our staff. These incidents have been pre-defined and recognized for immediate notification via an emergency distribution list, with specific responsibilities for follow-up and communication, to ensure the correct action is taken during the critical moments of such an event, and to ensure that all parties understand the nature of the event and response.

LSF Shuttle provides all specific reporting required by the City. Throughout the term of the service, other reports may be desired by staff, and will be provided by LSF Shuttle.

Management information is the function that provides management with the necessary information to plan, operate, and administer the transit organization. Specific management reporting activities include:

- Incorporating, in the management information system, the capability to collect data on performance and measure progress toward established goals;
- Accumulating data from various sources;
- Processing data for presentation in reports;
- Preparing reports which show planned results and actual accomplishments;
- Distributing reports to responsible individuals; and
- Obtaining feedback for explanation of variances and actions taken

LSF Shuttle believes that well designed management reports are an essential component of both internal and external communication in a transit system. As such, we utilize a group of reports that meet these communication objectives for the City. Each type of report is presented below along with the required parameters: data to be compiled, method of data manipulation and compilation, and report frequency.

Exhibit 6 – Reporting Information

Customer Information	
Data:	Telephone comments, complaints, commendations and requests
Method:	Database organization with electronic tracking
Reports:	Monthly, sorted by: operators, safety comments, ADA comments, equipment comments, new/expanded service requests, schedule modification requests, customer information (name, address, telephone number, and interest area). Supervisors and dispatchers records telephone and written comments on a customer comment sheet for subsequent input to the database.

Quarterly Passenger Counts	
Data:	Passenger boarding's by vehicle and trip. Daily entry for fixed and demand response.
Method:	Manual compilation from operator manifests
Reports:	Monthly summation submitted with billing

Transportation, Dispatch and Supervision Records	
Data:	Various elements related to service delivery
Method:	Computerized Reservations and Scheduling
Reports:	Daily Operations Report is the primary summary report

Safety and Training Record	
Data:	Applicant/candidate file, training modules completed, operator qualification data and certificate, accident reports, retraining certifications, annual safety record evaluation, ongoing open BI/PD claims and physical damage to buses
Method:	Windows-based PC Software
Reports:	Monthly: training completion certifications, accident records, liability claims activity, physical damage summary

Multiple records are generated throughout the service day, which help control and improve the delivery of service. The primary categories include dispatch log, radio record and service control information, supervisory reports of service and operator performance, conditions, accidents/incidents, discipline and commendations, and payroll exceptions. This information is summarized by the supervisor/dispatcher, who incorporates it into their respective Daily Operations Reports (DOR) for management and staff review daily. Hard copies of original data items are retained.

Most of this information is retained in operator/employee permanent hard copy records that are managed by the management staff. Accident files are maintained within the Safety Department.

All information is coordinated, and uploaded with the approval of the City of North Miami administrative staff as directed.

Key Performance Indicator (KPI) Reporting

LSF Shuttle maintains a standard policy and procedure for all of our transportation operations that includes collection and reporting of standard operating statistics. These reports are used for our internal reporting and service monitoring tracking of Key Performance Indicators (KPIs), and these reports are provided to our customers as a direct report and back-up documentation for the customer invoice. These Microsoft Excel-based reports contain the KPI standards our management and staff use to track performance, and are customized for each contracted service to reflect the needs of the particular customer, service type, geographic area, or ridership needs

Bus Technologies and Innovative Green Technologies

LSF Shuttle recognizes the importance of ensuring that our operations are as environmentally sustainable as possible. Our expertise in using a range of initiatives to minimize environmental impact and developing innovative solutions to sustainability issues has influenced our approach to developing more environmentally-friendly, lower-impact transit service and maintenance operations. Some recent examples of these initiatives are outlined below:

- LSF Shuttle procures alternatively fueled vehicles, for both service vehicles as well as for support of our operations. The vehicles utilized for the City's Shuttle Services run on Bio-Diesel.
- Regardless of engine type in use, LSF Shuttle encourages its vehicle operators to minimize idle time whenever safe and feasible. LSF Shuttle is even implementing new GPS technologies that allow the LSF Shuttle management and operations teams to monitor idle time and take corrective actions as necessary.
- Whenever possible, LSF Shuttle conducts meetings and training sessions using virtual means, employing tools such as GoToMeeting and GoToMyPC to minimize travel costs, reduce our carbon footprint, and avoid wasteful printing and distribution of meeting materials.

- LSF Shuttle refrains from the costly and often wasteful practice of printing hard copies of documents and brochures. Marketing information is printed "on demand," and our management and supervisory teams are encouraged to rely on electronic versions of documents when feasible. Files are kept electronically when possible and hard copies are shredded and recycled. When printing of documents is necessary, our teams use recycled printing and binding materials.
- In lieu of costly shipping of files in hard copy or on storage devices such as CDs and thumb drives, LSF Shuttle managers utilize web-enabled, protected websites to upload and download files, both internally and with external parties.
- All electronic communications from LSF Shuttle employees are required to include a statement that strongly discourages the practice of printing hard copies of email communications.
- Our operating facilities and offices are encouraged to develop Green Teams to implement sustainable practices, such as the use of motion-sensitive lighting and electricity, reusable coffee cups, recycling programs, use of recycled materials for paper and office supplies, and any other creative policies that the local teams come up with.
- The IT department recycles and reuses computer and telephony components whenever feasible, and when not feasible, the units are donated to local charities that redeploy the technologies in third world countries that welcome technologies that are considered outdated in America.

LSF Shuttle has implemented environmental management systems at our facilities with the aim of minimizing waste and harmful emissions into the environment including:

- Managing industrial waste and recycling oils and detergents via appropriate channels
- Efficiently using and recycling wash water
- Protecting soil and subsoil, through the use of building technologies that prevent effluents from reaching the eater table
- Training and awareness campaigns to raise staff awareness of safety and environmental issues.

Community Involvement

We encourage our locations to participate in local community efforts in support of the environment and support green efforts on a corporate level through participation in transit-related green efforts. We also encourage our customers to sign the APTA Sustainability Commitment, described below, a method to give APTA members credit for their sustainability efforts and the tools to create an effective action plan.

We actively and fervently support public transportation advocacy programs that include sustainability at the heart of their causes. Examples include APTA's annual "Dump the Pump" campaign, the Florida Public Transportation Association's IM4TRANSIT.ORG advocacy program (for which we serve as the only

financial sponsor), and the Transportation for America Coalition (www.t4america.org) which includes the reduction of America's reliance on oil as its key platform.

Additional Information

LSF Shuttle' goal is to provide a reliable and professional service to customers. City of North Miami's passengers require an efficient, friendly and safe service to transport them and in this section we have detailed our success in delivering similar service.

LSF Shuttle has been a true pioneer in the areas of marketing, service quality and accessibility going above and beyond standard expectations. We draw from extensive experience gained from networks in the United States and throughout the world. Our operations share common organizational structure, operating methodologies and optimization tools that define our reputation as a contractor with the best customized approach to transit in a local community.

Through our vast experience in managing and providing transportation services in South Florida, LSF Shuttle has developed a dynamic approach to operating transportation services. The core of our transportation service delivery is excellent customer service. We pride ourselves on thinking like passengers and understanding their core needs including safety and on-time performance.

The core of our operations includes:

- Safe, reliable and efficient transportation.
- Passenger-sensitive and customer friendly delivery of service.
- An experienced, dedicated and customer-focused management team.
- Accountability for quality and performance.
- Fact-driven, swift decision making.
- Continuous improvement in the delivery of services.
- Application of technology solutions to improve system efficiency and customer service

LSF Shuttle' operations fleet exceeds 250 vehicles transporting hundreds of thousands of passengers each year. We have become experts in the details and complexities of moving large numbers of people under stringent constraints. Our customers trust in our ability to transport their passengers, employees, customers and visitors in a manner that:

- Does not interrupt their operations.
- Places the passenger where they need to be when they need to be there.
- Puts the passenger at ease knowing they are being transported in a clean, safe and comfortable vehicle.
- Leaves the passenger with the satisfaction that they have been transported by a safe, uniformed, friendly, well trained and competent operator.
- Provides the customer with a capable and competent partner who is committed to maintaining quality while effectively managing costs.

We believe that first impressions are paramount and continuing to live up to that first impression is equally important. When a customer rides in a City of North Miami bus, this experience may very well be their first impression of our company or of the City, but since we have been operating this service for the past eight years, it may also be their 1,000th. Therefore we take customer service very seriously, and have procedures in place to ensure the positive experience of our riders. During our tenure as the

transit bus service provider for the City of North Miami we have taken the number of customer complaints from a relatively high number down to practically zero.

Customer Comment Resolution

We pride ourselves on our exemplary record of quality customer service and continue to focus on this aspect of our business. All customer complaints are promptly investigated and followed-up on by your general manager. Each complaint is entered into our Customer Feedback database to permit monitoring of customer comments, and to detect any trends in customer comments related to overall service or a particular operator. Our policy is for all complaints to be investigated and a preliminary response communicated to the individual making the complaint within 24 hours. This also includes response to City staff as well. The investigation and follow-up will result in resolving the customer's complaint, and hopefully, continued use of our bus service.

Customer Feedback

Our policy is to provide customers with as many opportunities and methods as possible to give us their feedback. Typical methods that are used for the Community Shuttle Services include:

- Customer comments via email
- Customer comments via website
- Social Media feedback (Twitter, Facebook, etc.)

Customer Courtesy and Unsafe Driving Complaints

Any complaint received regarding operator courtesy or the unsafe operation of a vehicle will be addressed immediately. Operators will be subject to counseling and will be dealt with according to LSF Shuttle' progressive disciplinary policy. Additionally, any need for re-training will be addressed and documented.

Recurring discourteous and safety related complaints will not be tolerated. LSF Shuttle' proactive, progressive discipline and corrective action program requires prompt communication with operators or other front line employees that may be the source of such recurring complaints. Recurring complaints regarding safety and courtesy affect the City's and LSF Shuttle' image, and will result in termination if not corrected.

Stop Announcements

Operators are required to make stop announcements. Operators have been trained on the proper terminology.

Supervision

LSF Shuttle has always, and will always, have a supervisor available to oversee and monitor all operator activities as well as to handle any emergency situations that may arise. In the event that the assigned supervisor is not available due to a day off or vacation, LSF Shuttle has other supervisors or managers always available. LSF Shuttle is providing two supervisor vehicles to ensure adequate daily supervision and responsiveness.

REQUEST FOR PROPOSAL

RFP NO. 48-12-13

COMMUNITY TRANSPORTATION SERVICES

RESPONSES ARE DUE NO LATER THAN

Tuesday, October 8, 2013 at 3:00 PM (Local Time)

AT

CITY OF NORTH MIAMI
OFFICE OF THE CITY CLERK
CITY HALL, 1ST FLOOR
776 NE 125TH STREET
NORTH MIAMI, FL 33161-4116

The responsibility for submitting a response to this solicitation at the Office of the City Clerk on or before the stated time and date will be solely and strictly the responsibility of the proposer. The City of North Miami will in no way be responsible for delays caused by the United States mail delivery or caused by any other occurrence.

Contact Person: Ruby C. Johnson
Email: rcrenshaw@northmiamifl.gov I Phone: (305) 895-9886 I Fax: (305) 895-1015

SUBJECT: The City of North Miami is requesting proposals from qualified and experienced transportation firms for the operation of a community transit service within City of North Miami's ten square miles.

Please submit an original proposal, one (1) CD and three (3) copies in response to this Request for Proposal (RFP). The Proposals are to be submitted in a sealed envelope bearing the name of the proposer, and the address as well as the title of the RFP no later than 3:00 P.M. local time **Tuesday, October 8, 2013**. Address your Proposal to City of North Miami, Office of the City Clerk, 776 N E 125th Street, North Miami, Florida 33161. Please clearly mark Proposals:

RFP NO. 48-12-13
Community Transportation Services

The City's tentative schedule for this Request for Proposal is as follows:

Issue Date:	**September 16, 2013**
Cut- off Date for Questions:	**October 2, 2013**
Opening of Proposals:	**October 8, 2013**
Proposals Evaluations:	**October 8 – 12, 2013**

A 5% Bid Bond and a 100% Performance Bond is a requirement of this RFP.

The City reserves the right to delay or modify scheduled dates and will notify proposers of all changes in scheduled dates.

Copies of this RFP Document may be obtained by contacting Demandstar by Onvia at www.demandstar.com or calling toll free 1-800-711-1712 and request Document No. 48-12-13 or may be purchased for a non-refundable fee of $25.00 from the Purchasing Department.

The City of North Miami reserves the right to reject any or all Proposals with or without cause; to waive any and all irregularities with regard to the specifications and to make awards in the best interest of the City.

Please be advised that solicitations(s) issued are subject to the City of North Miami Code Section 2-312 prohibiting certain communications with the City as completely specified in General Conditions of the Proposal.

We look forward to your active participation in this solicitation.

Sincerely,

Ruby C. Johnson

Ruby C. Johnson, CPPO
Purchasing Director

Table of Contents

Section		Page
1.0	Scope of Work	4
2.0	Special Conditions	10
3.0	Proposal Format	14
	Exhibit 1 – Price Proposal Form	18
4.0	Contract Forms	19
	Check List	20
5.0	General Guidelines and Information	21

Attachments

Exhibit A	City of North Miami Interlocal Agreement
Exhibit B	Current Routes

Required Forms

Form A-1	Public Entity Crimes Affidavit
Form A-2	Non Collusive Respondent Certificate
Form A-3	Local Preference (if applicable)
Form A-4	Questionnaire
Form A-5	Acknowledgement of Addenda
Form A-6	Proposer's Disclosure of Subcontractors
Form A-9	Bid Bond Form
Form A-10	Performance Bond (Required at Award)
Form A-14	References

All of our forms can now be found on our website at: http://www.northmiamifl.gov/business/purchasing/forms.asp. These forms are fill –in forms. Please ensure to include all applicable forms with your bid responses signed and notarized as required. Emailed forms will not be accepted.

SECTION 1
SCOPE OF WORK

1.1 PURPOSE

The purpose of this RFP is to secure a qualified company to provide services as required for the operation and maintenance of a community transit service within the City of North Miami.

The City further seeks a firm that is a willing participant in the City's goal to develop subcontracting and employment opportunities to local businesses and residents as defined by Section 7-151 of the City Code.

The Proposer will be required to submit, a Community Benefits Plan for approval by the City Manager. The Community Benefit plan shall be exclusive of the City of North Miami's Local Preference requirement, under Section 7-151 of the City Code. The successful Proposer's Community Benefits Plan shall be incorporated into and shall become a part of the agreement entered into between the City and the selected Proposer (See Section 5.32).

1.2 MINIUMUM QUALIFICATIONS

To be eligible to respond to the RFP, the Proposer must demonstrate sufficient capacity, resources and experience to provide Transportation Services. Any Proposer that fails to meet all the following minimum criteria shall be noted as "non-responsive" and will not be evaluated / scored.

- At a minimum, the Proposer shall be licensed to do business in the State of Florida;
- Vendor shall comply with all federal, state, and county licensing requirements and shall comply with all provisions of the Miami-Dade County – City of North Miami Interlocal Agreement ***(See Exhibit "A")*** that pertains to transit circulator services
- To be determined responsive, firms must be licensed, bonded and insured as required by the State of Florida;
- A minimum of 5 years experience in providing bus service and 2 years of relevant experience for similar services and should emphasize capability to meet the required schedule, and the employ capable personnel who will actually supervise and perform the work.

1.3 SCOPE OF WORK

The successful Vendor shall provide a turnkey operation which will include the daily operation and on-going maintenance of the transit service which shall consist of five (5) ADA compliant, air conditioned buses to be used in regular route service consisting of fixed stops. Vehicles, equipment, personnel, etc., necessary to successfully operate the system, shall be provided by the Vendor. The proposed routes are listed herein. The routes are subject to change from time to time as determined by the City of North Miami.

This will be a continuation of service provided for the residents of the City of North Miami and may be funded by federal, state, county or city funds.

Service shall include the following:

1.3.1 VEHICLES

- Vendor shall provide five (5) buses with less than 20,000 miles per bus at the start of this contract
- Each bus shall accommodate a minimum of 16 seated passengers, but larger vehicles will be given preference
- Buses must be lift-equipped and ADA compliant.
- All buses shall have working cooling systems which shall be available during all times the bus is in service. Cooling systems shall be capable of maintaining a minimum interior temperature of 78 degrees.
- Buses must be equipped with a GPS system that provides the Vendor's bus dispatcher and City Staff with the ability to check the status and location of all vehicles at any time. These must be always functioning and City will be notified in advance of any changes.
- If the buses run on diesel it must be ultra-low sulfur diesel with the latest emission control systems. Vendor will be responsible for the quality of the fuel and the condition of the emission control system.
- Vendors are encouraged to provide innovative green technologies or practices, including reduced idle time, alternative fuels, etc
- Vendor shall provide an additional vehicle in the event of a vehicle breakdown. The maximum response time until the arrival of the replacement vehicle shall be 30 minutes.
- Buses shall be replaced at the end of its useful life at which for this contract is approximately 150,000 miles. The mileage may be lower or higher depending on the frequency and extent of repairs. It will be the vendor's responsibility to notify the City of any vehicle I service with mileage in excess of 150,000 and justify its continued use.
- The fifth bus shall be used for peak hour service to the schools and serve as a backup for the other buses.
- All buses must be equipped with 2-way radio communications that are monitored from the time the buses leave the Vendor's complex to the time they return to the complex. Device should minimize driver distraction and be used only for business use.
- Name of Driver must be properly displayed at all times within the bus.
- Vendor will display announcements from the City from time to time at a visible location on the vehicle – these will include holiday announcements or changes of service. Vendor will provide a location on the bus where the City may distribute and collect handouts, surveys, route schedules or other necessary information.
- Vendor shall be responsible for providing an Operations Manual which shall, at a minimum, include provisions regarding:
    - Vehicle Operating Procedures
    - Driver Conduct
    - Safety Procedures
    - Accident Procedures
    - Administration
    - Reporting Procedures
    - Passenger Relations and Protocol
- Vendor shall provide Administrative services which shall, at a minimum, include:

- Systems Manager
- Office Procedures
- Downtime Procedures
- Accounting systems

1.3.2 FACILITIES

- Vendor shall provide own facilities for housing and maintenance of vehicles.

1.3.3 STAFF

- Vendor shall designate a Project Manager who will oversee the complete operation of services detailed herein. Said Project Manager shall have at least five (5) years of experience in bus service operations. Vendor must have an ASE certified mechanic as part of their staff.
- The Vendor must have a Supervisor on-site in the event of any incident
- Vendor shall provide personnel (staffing training, experience of operators, ability to address customer complaints, etc.).
- A manager will serve as the primary contact with City staff and will be responsible for ensuring that all issues are addressed
- Vendor must provide a Customer Service Phone number for complaints. This number shall be visible at all times within the buses. This number must also be a Miami-Dade area code number or a Toll Free (800) number. This number shall be staffed by someone qualified to handle complaints while the service is in operation.
- Vendor will handle all customer complaints and submit them to the City of North Miami with invoices on a monthly basis.

1.3.4 REPORTS

- Vendor shall provide sample of reports ***(with RFP),*** which shall be submitted on a monthly basis
- Vendor must maintain records detailing the daily ridership of all routes. This is to include the mileage, bus number, date of service, and pick-up and drop off locations. This information shall be collected daily and turned in on a monthly basis by the 10th of the immediately following month in digital form.
- The Vendor shall provide the City with monthly reports per Staff requests, and as required by the Federal Transit Authority (FTA) and Florida Department of Transportation (FDOT). Payment for services will not be made without required reports.
- Reports shall be in digital format in spreadsheet or database format.

1.3.5 VEHICLES SIGNAGE

- Vehicles shall have a full vehicle wrap and route designation signs shall be conspicuously displayed on the front, sides and rear of the vehicles.
- Any temporary replacement vehicle shall be clearly identified as part of the NOMI Express fleet and include the route designation

1.3.6 HOURS OF OPERATION

The Vendor shall operate the four primary routes with one bus Monday through Friday excluding holidays, at a minimum from 7 a.m. to 8 p.m. Some of the buses may operate until 10 p.m., Monday through Thursday. The fifth or "Special Route" operates between 1:30 p.m. and 5:30 p.m. on primary school days.

Vendor shall provide the cost for additional hours for service with a minimum of four (4) hours of service including weekends ***(see RFP Proposal Form).***

The Vendor shall operate this service with the following performance standards and goals, which include but are not limited to:

- Average passenger wait time – maximum of five (5) minutes based on the scheduled arrival time.
- Reliability – lateness of more than five (5) minutes, should occur less than 10% of time and the buses shall never depart a stop before its scheduled time.
- Vendor shall provide proof of timetable adherence via random vehicle tracking at a minimum, on a monthly basis.

1.3.7 CURRENT ROUTES

Four (4) routes are made up of a service area of approximately ten (10) miles and have a roundtrip service time of one (1) hour; the fifth route is limited to 4 hours per day during days when public schools are in session ***(See Exhibit B***).

The Vendor shall operate each route with one (1) bus up to 13 to 15 hours a day, Monday through Friday excluding holidays. Service shall begin at 7:00 a.m., to transport children to school and commuters to work or to transfer points with Miami-Dade Transit Authority buses. The City may change the scheduled service at its discretion. When making such changes, the City will provide 30 days written notice for permanent schedule changes and 5 days notice for temporary changes.

Green Route:

The Green (west) route currently starts and finishes at the Griffing Adult Center (12220 Griffing Blvd) and travels in a clockwise direction. Stops along this route include Gratigny Elementary (119 St & N Miami Ave), Gratigny Post Office (119 St & NW 10 Ave), Oleander Park (121 St & NW 13 Ave), Sunkist Grove Community Center (12500 NW 13 Ave), Sasso Pool (12500 NW 11 Ave), Ben Franklin Elementary (NW 13 Ave & 131 St), the Celestine Center, Barry University, and Saint James Catholic School (131 St & NW 6 Ave).

Orange Route:

The Orange (west-central) route currently starts and finishes at the Griffing Adult Center (12220 Griffing Blvd) and travels in a clockwise direction. Stops along this route include North Miami Middle School (NE 6 Ave & 136 ST) North Miami Senior High School (135 St & NE 9 Ave), North Miami Library (NE 8 Ave & 133 St), North Miami City Hall (NE 8 Ave & 124 St), and Publix Supermarket (NE 6 Ave & 128 St).

Blue Route:

The Blue (east-central) route currently starts and finishes at the Griffing Adult Center (12220 Griffing Blvd) and travels in a clockwise direction. Stops along this route include President Supermarket (125 St & NE 4 Ct), Publix Supermarket (NE 6 Ave & 128 St), Target (Biscayne Blvd & 140 ST), North Miami Library (NE 8 Ave & 133 St), Publix Supermarket (Biscayne Blvd & 128 St), Johnson & Wales University (128 St & NE 17 Ave), Bryan Elementary (125 St & NE 13 Ave), North Miami City Hall (NE 8 Ave & 124 St).

Red Route:
The Red (east) route currently starts and finishes at the Publix on Biscayne Boulevard and 128 Street and travels in a counter-clockwise direction. Stops along this route include Johnson & Wales University (128 St & NE 17 Ave), Walgreens (123 St & NE 18 Ave), Penny Sugarman Tennis Center (1795 Sans Souci Blvd), Target (Biscayne Blvd & 140 St), David Lawrence and Alonzo Mourning Schools, and FIU Biscayne Campus.

NOMI "Special":
The NOMI Special which operates only 4 hours per day, starts at Alonzo and Tracy Mourning High School, goes to Johnson & Wales University, then North Miami High School and ends at the Griffing Center

1.7 OTHER REQUIREMENTS

- Gratuities of any sort, shall NOT be accepted, solicited or encouraged by the driver. Signs shall be posted in this regard.
- No one shall be permitted to smoke, eat, drink or play a radio (other than necessary driver/dispatcher radios) while on the vehicles

1.8 PREVENTATIVE MAINTENANCE SCHEDULES

Vendor will provide the City with the planned maintenance schedule to ensure the safe operation of buses, following the Original Equipment Manufacturer (OEM) requirements and industry standards. The vendor will also provide quarterly maintenance logs for each bus and documentation for any major repairs (in excess of $5,000) performed.

1.9 VEHICLE APPEARANCE / INSPECTIONS

- All vehicles in service are required to be clean, free of dents, scratches, or other damage, which materially and adversely affect a vehicles appearance. Vehicles must also be free of mechanical problems that render the vehicle unsafe, excessively noisy or uncomfortable to ride in.
- The vehicles must be cleaned of debris inside at the end of each shift and inspected by the next driver. The exterior of all vehicles must be washed weekly at a minimum.
- Windows of vehicles shall be cleaned at ALL times; the vehicle must be swept daily and deodorized as necessary.
- All fluid levels on the vehicles shall be checked on a daily basis.
- All drivers will be required to complete a vehicle inspections report (VIR) at the end of each shift noting any safety or mechanical defects. These reports are to be turned in to the vendor's Shift Manager and a copy set of the reports shall be turned over to City staff member overseeing this project on a monthly basis.

1.10 STAFF APPEARANCE

- Vendor will provide I.D. badges that are to be worn by the staff daily.
- A standard uniform (i.e. shirt, pants, shoes) must be worn by all personnel while on duty.

1.11 DRIVER STANDARDS

- All drivers must have a current, valid, Florida drivers license Class C with a passenger endorsement or better. **Copies of this must be submitted by the awarded vendor prior to commencement.**

- Drivers must be a licensed US driver for a minimum of three (3) years; read, write, and understand English and be at least 25 years old.
- No driver shall be employed or remain employed if said driver has had three (3) or more moving violations within the last two years prior to application, have more than one moving violation within the last 12 months or a criminal record with any felony convictions (includes a guilty verdict, a determination of guilt after trial to a judge, a guilty plea, deferred adjudication, or a plea of nolo contendere or no contest).

1.12 PASSENGER RELATIONS

- Passengers must receive prompt, friendly, courteous service and accurate information.
- Passengers shall receive efficient service with a smile and a thank you
- Passengers are to be treated with respect & dignity, care and compassion
- Passengers should arrive and depart on time.
- Passengers shall receive prompt answers to his/her questions.

1.13 SITE INSPECTION OF VENDOR FACILITY

City staff will conduct an on-site inspection of the proposer's facility to view vehicles and operation.

End of Section 1

SECTION 2
SPECIAL CONDITIONS

2.1 CONTACT PERSON

For any information regarding the specifications and requirements of this RFP, contact: Ruby C. Johnson via facsimile: (305) 891-1015 or email at **rcrenshaw@northmiamifl.gov.**

Any questions or clarifications concerning this RFP shall be submitted in writing by mail, facsimile or email to the Purchasing Department, 776 N.E. 125th Street, North Miami, Florida 33161, FAX: (305) 891-1015. The RFP title/number shall be referenced on all correspondence. All questions must be received no later than **Wednesday, October 2, 2013 at 3:00 PM.** All responses to questions/clarifications will be sent to all prospective Respondents in the form of an addendum. No questions will be received written, verbally or after said deadline.

2.2 PRE-PROPOSAL CONFERENCE

N/A

2.3 METHOD OF AWARD

A committee of three (3) members appointed by the Purchasing Director shall meet to review the responses to the RFP for compliance with the requirements and provide an objective evaluation of all proposals. The committee will be comprised of appropriate City personnel from multiple departments as deemed necessary, with the appropriate experience and/or knowledge, striving to ensure that the committee is balanced with regard to both ethnicity and gender. The Committee's initial evaluation of proposals shall be on the basis of the specific project need and the professional services offered by the Respondent in accordance with those criteria listed below.

Criteria will be scored on a scale of "0" to "100" per evaluator with the maximum number of points available for each criterion as noted in this section. The total maximum number of points to be scored under this process is 300. Scoring is based on a point total per evaluator and not a percentage.

Proposals will be evaluated based on the following criteria:

Criteria	Considerations	Points
Price	Cost to the City Per Revenue Hour	**35**
Experience, Qualifications and Financial Resources	Demonstrated success and experience operating similar contracts. Experience of management and supervisors. Financial resources to cover capital and operating expenses and the ability to deliver backup services	**25**
Methodology & Approach to Services	How will vendor ensure a safe, customer focused service? This may include: Transition Plan, Employee Training and Adherence to Schedules, GPS and Rider Counts, Documentation & Feedback	**20**

Proposed Bus	Passenger capacity, bus technology, alternative fuels, low emissions, comfort, safety & appearance	**10**
Local Preference	See Section 3 Item 6	**10**
TOTAL		**100**

Award will be made to the Respondent who submits the overall Proposal that is determined to provide the best value to the City. Any contract resulting from this solicitation will be in the form acceptable to the City.

2.4 TERM OF CONTRACT

The term of the contract shall be for a period of five (5) years with one (3) year renewal period upon mutual agreement of both parties.

2.5 PROPOSAL CONDITIONS

2.5.1 The City Options

The City may, at its sole and absolute discretion, reject any or all Proposals, re-advertise this RFP, postpone or cancel this RFP process at any time, or waive any irregularities in this RFP or in the Proposals received as a result of this RFP.

The determination of the criteria and process whereby Proposals are evaluated, the decision as to who shall receive a contract award, or whether an award shall ever be made as a result of this RFP, shall be the sole and absolute discretion of the City.
In no event will any successful challenger of these determinations or decisions be automatically entitled to the award of this RFP.

The submittal of a Proposal will be considered by the City as constituting an offer by the Proposer to provide the services described in this RFP.

2.5.2 Rules, Regulations, and Requirements

All Proposers shall comply with all laws, ordinances, and regulations of any Federal, State of Florida, Miami-Dade County, or City government applicable to submitting a response to this RFP and to providing the services described herein.

2.5.3 Change of Proposal

Any Proposer, who desires to change his/her Proposal, shall do so in writing. Any request for changes shall be received prior to the date and hour of the Proposal opening. The Proposer's name and the RFP # shall appear on the envelope.

2.5.4 Withdrawal of Proposal

A Proposal may be withdrawn prior to the date and hour of the Proposal opening. Any Proposal not so withdrawn shall, upon opening, constitute an irrevocable offer, for the period of ninety (90) days after the date of the Proposal opening, to provide the proposed services.

2.5.5 Modifications of Proposal

No unsolicited modifications to Proposals will be permitted after the date and hour of the Proposal opening.

2.6 INSURANCE - General Insurance Requirements

- Workers' Compensation Insurance – As required by the State of Florida with Employer's Liability Insurance - $1,000,000/ Accident and $1,000,000/Disease

- Commercial General Liability written on an occurrence form - $1,000,000/occurrence and should include:

    - Medical Expenses - $25,000/person, Personal & Advertising Injury $1,000,000, General Aggregate $2,000,000 and Products Completed Operation $2,000,000 aggregate

- Automobile Liability Insurance covering any auto including hired, non-owned and contractual liability – $1,000,000 combined single limit bodily injury & property damage.

- Excess Umbrella Liability (written on an occurrence form) - $5,000,000/occurrence & aggregate

- Excess Automobile (bodily injury and property damage) - $1,000,000

The successful Respondent must submit, prior to signing of contract, a Certificate of Insurance including the City of North Miami as additional insured for Commercial General Liability and Auto Liability Insurance. Respondent shall guarantee all required insurance remain current and in effect throughout the term of contract. Carrier shall provide evidence of coverage and notify City of any cancellation of policies. The Insurer shall be admitted to do business within the state of Florida with a B+ rating or better from A & M Best.

2.7 CONFLICTS OF INTEREST

The City's Conflict of Interest guidelines will apply to an award of contract. The selected Proposer ("Contractor") covenants that no person under its employ who presently exercises any functions or responsibilities on behalf of the City in connection with this RFP has any personal financial interest, directly or indirectly, with contractors or vendors providing professional services on work assigned to the Contractor, except as fully disclosed and approved by the City. Contractor shall further be aware that if awarded, in the performance of this RFP no person having such conflicting interest shall be employed.

2.8 VENDOR REGISTRATION

The awarded Proposer shall be a registered vendor with the City of North Miami for the duration of the agreement. In becoming a registered vendor, the Proposers confirms its knowledge of and commitment to the City of North Miami Procurement Ordinance No. 1244 which sets forth the provisions of the procurement of supplies and services, including source selection and contract formation.

Proposers may view the City's procurement ordinance at www.northmiamifl.gov/purchasing

2.9 REVIEW OF PROPOSALS

The City will not allow any requests for documents or reviews of submittals until thirty days after proposals are received or after award. After said time, firms may request documents or make an appointment to review submittals and presentations.

2.10 COMMUNITY BENEFITS PLAN

The Successful Vendor will be required to submit, a Community Benefits Plan for approval by the City Manager. The Community Benefit plan shall be exclusive of the City of North Miami's Local Preference requirement, under Section 7-151 of the Code. The Successful Vendor will be required to document their experience and track record in delivering to a municipality, county or other local government agency a Community Benefits Plan. The Successful Vendor shall be required to demonstrate and provide to the City a proposed Community Benefit Plan which has identifiable and observable benefit to the community within the City. Respondents are encouraged to be creative in the development of a Community Benefit Plan and the types of benefits their plan is designed to provide. The City Manager, as the City's Chief Executive Officer, shall approve the final Community Benefits Plan proposed by the successful Proposer, as a precondition to the execution of any agreement. The Successful Vendor's Community Benefits Plan shall be incorporated into and shall become a part of the agreement entered into between the City and the selected Vendor.

End of Section 2.0

3.0
PROPOSAL FORMAT

Respondents should carefully follow the format and instructions outlined below, observing format requirements where indicated. All materials (except for plans and schematics, if any) are to be submitted on 8 1/2" X 11" pages, neatly typed and double sided on recycled paper, with normal margins and spacing. Proposal shall be limited in size as to what can fit into a 2 1/2" binder. All documents and information must be fully completed and signed as required. Proposals which do not include the required documents may be deemed non-responsive and may not be considered for evaluation.

Please submit an original proposal, one (1) CD and three (3) copies in response to this Request for Proposal (RFP). Responses should be prepared simply and economically, addressing the requirements according to the instructions provided and in a concise manner.

The Proposal shall be written in sufficient detail to permit the City to conduct a meaningful evaluation. The Proposal must include the following information:

3.1 MANDATORY SUBMITTAL REQUIREMENTS

LABEL EACH SECTION AS NUMBERED

Firms shall submit a Proposal in a bound format which shall include but not limited to the following:

1. Proposal Contact Person Information (See attached Form)
This form should be the first page of the Respondents Proposal. The contact person indicated should be someone the City may contact for any questions or provide any correspondence related to this RFP.

2. Business Structure

- Provide a brief introduction narrative letter highlighting the qualifications and training of the firm including component firm(s), legal nature of the organization and number of years in existence and location.
- Provide 3 years of balance sheets and income statements demonstrating profitability and the resources to purchase and maintain buses, meet payroll and provide backup vehicles.
- Include copies of all active professional licenses and certification held by the Firm under Florida Law to provide the required services.
- Include proof of the required insurance.
- Include proof of bid bond

3. Firms Past Experience

- Provide experience in providing transportation services for similar type services as described in this RFP.

- Include a minimum of two (2) professional references from current or past clients (within three years) Client cannot be the City of North Miami (***Use Form A-14 - Reference Form OR letter from reference - include amount of contract and overall performance).***
- Respondents should submit any information they deem appropriate for evaluation of past performance with projects similar in nature to the one under consideration by the City.

4. Team Experience

- Provide resumes of the proposed Manager, Supervisors, ASE Mechanic and Drivers. Include their related work experience, qualification, training and copies of active licenses and certifications as required. Include the length of tenure with the Firm. Also indicate the percentage of time these individuals will be devoted to the City's contract
- Provide resume of the Project Manager who will oversee the City's Contract to include five (5) years of experience in bus service operations and direct experience with similar projects.

5. Methodology, Transition & Approach to the project

- Provide a statement of the firms understanding of the project and methodology and approach to managing the City's services.

- Provide a detailed description / plan of how services will be transitioned under the agreement from current operations and staff to the Firm. Ensuring a smooth, seamless transition is of critical importance to the City;

- Provide the location of the firm and the distance from the City including bus storage and maintenance facilities;

- Provide information on the vehicles (size, seating capacity, age, condition, design & aesthetics, backup equipment, maintenance levels, communication systems) to be used for this contract;

- Provide sample of reports which shall be submitted on a monthly basis;

- Provide any new bus technology your firm can offer, innovative green technologies or practices, including reduced idle time, alternative fuels, operating procedures and maintenance to ensure low emissions;

- Provide any additional information that will demonstrate the Vendor's ability to deliver the service efficiently and ensure customer satisfaction.

6. Local Business Preference

The RFP is subject to Section 7-151 of the City Code which, except where contrary to federal and state law, or any other funding source requirements, provides that preference be given to local businesses or businesses with a total workforce of 10% residing in the City of North Miami or firms that sub or firms that subcontract at least ten percent (10%) to local businesses. To satisfy this requirement, the Proposer shall affirm

in writing its compliance with either of the following objective criteria. Proposers may utilize ***Form A-3 Local Vendor Preference*** in Section 4.0 – Contract Forms.

A local business shall be defined as:

a) A business that has a physical business address located within the limits of the City of North Miami from which the Proposer operates or performs business. Post Office Boxes are not verifiable and shall not be used for the purpose of establishing said physical address. A local business must have a valid local business tax receipt, issued by City of North Miami; or
b) A business has at least ten percent (10%) of its total workforce residing in the city prior to the city's issuance of the solicitation for supplies or services; or
c) A business that subcontracts at least ten percent (10%) of the contractual amount of a City project to subcontractors who are physically located within the City of North Miami. ***(Must complete Forms A-3a Statement of Intent & A-3b Participation Schedule)***

The City is seeking firms that are willing participants in the City's goal to develop subcontracting and employment opportunities to local businesses and residents as defined by Section 7-151 of the City Code.

7. Price Proposal

Services described in this RFP shall be compensated on an hourly rate. Proposer should incorporate profit and overhead into the hourly rates, which also must include, without limitation, all uniform parts, supplies, equipment, telephone, travel, mileage, and other charges. No separate or additional costs of any kind will be allowed.

8. Contract Forms

All contract forms must be completed (with all blanks filled in), executed and properly notarized.

End of Section 3

CITY OF NORTH MIAMI

PROPOSAL CONTACT PERSON INFORMATION

RFP 48-12-13
Community Transportation Services

Include this sheet as the very first sheet of your Proposal. Please complete the form in its entirety. The contact person indicated should be someone the City may contact for any questions or provide any correspondence related to this RFP.

LEGAL NAME OF PROPOSER(S) _____

FEDERAL EMPLOYEE IDENTIFICATION (FEIN) NUMBER _____

MAILING ADDRES: _____

CITY, STATE, ZIP CODE: _____

CONTACT PERSONS NAME: _____

TITLE: _____

EMAIL ADDRESS: _____

TELEPHONE NUMBER: _____

FAX NUMBER: _____

AUTHORIZED SIGNATURE: _____

PRINT NAME & TITLE: _____

NORTH MIAMI
FLORIDA

PROPOSAL FORM

RFP 48-12-13
Community Transportation Services

Hours	Cost
Monday – Friday (up to 15 hours per day)	$ _____ per revenue hour
Additional hours of service with a minimum of four (4) hours of service including weekends	$ _____ per revenue hour

1. The price listed in the bid form shall include the total cost to complete the Work including but not limited to materials, labor, equipment, bonds, insurances, etc, as necessary to ensure proper delivery of services and product requested by the City of North Miami.

2. I hereby certify that I am authorized to act on behalf of the firm, individual, partnership, corporation or association making this proposal and that all statements made in this document are true and correct to the best of my knowledge. I agree to hold this offer open for a period of one hundred and eighty (180) days from the deadline for receipt of proposals; or, if I am selected as the Top-Ranked Offeror, for such further period as is necessary for obtaining sale contract signature and approval.

3. I understand and agree to be bound by the conditions contained in the Request for Proposal and shall conform with all requirements of the Request for Proposal.

_____

Name: (Please Print)

_____

Offeror Signature Title: Date:

SECTION 4.0
Contract Forms

The following forms are required to be submitted with this RFP.

Form A-1	Public Entity Crimes Affidavit
Form A-2	Non Collusive Respondent Certificate
Form A-3	Local Preference (if applicable)
Form A-4	Questionnaire
Form A-5	Acknowledgement of Addenda
Form A-6	Proposer's Disclosure of Subcontractors
Form A-9	Bid Bond Form
Form A-10	Performance Bond (Required at Award)
Form A-14	References

All of our forms can now be found on our website at: **http://www.northmiamifl.gov/business/purchasing/forms.asp**. **These forms are fill – in forms. Please ensure to include all applicable forms with your RFP documents signed and notarized as required. Emailed forms will not be accepted.**

PROPOSAL SUBMITTAL CHECKLIST

RFP 42-12-13
COMMUNITY TRANSPORTATION SERVICES

This checklist is provided for Proposer's convenience only and identifies the sections of this submittal document to be completed and submitted with each response. Any Proposal received without any one or more of these sections may be rejected as being non-responsive. Please be advised that this checklist may not necessarily complete include all of the requirements listed throughout this Solicitation. It sets guidelines for consideration, and may be added to as the need arises.

Company Name: _____

Tab/Page No.		OFFICE USE ONLY
	Cover Page and Contact Person Information Sheet	
	Business Structure	
	Balance Sheets and Income Statement	
	Firms Qualification & Experience	
	Team Experience	
	Methodology & Approach	
	Price Proposal	
Tab/Page No.		**OFFICE USE ONLY**
	A-1 Public Entity Crimes Affidavit	
	A-2 Non- Collusive Proposal Certificate	
	A-3 Local Preference Certification	
	A-4 Questionnaire	
	A-5 Acknowledgement of Addenda	
	A-6 Disclosure of Subcontractors & Suppliers	
	A-7 Insurance Requirements	
	A-9 Bid Bond	
	A-14 References	

FOR PURCHASING OFFICE USE ONLY

☐ Responsive ☐ Non-Responsive ☐ Other: _____

Comment: _____

Section 5.0
General Guidelines and Information

5.1 DEFINITIONS

a) "City." The City of North Miami.
b) "Contract" a binding written agreement, including purchase orders, containing terms and obligations governing the relationship between the City and the other party.
c) The word "Department" to mean a department of The City of North Miami.
d) The word "Proposal" means the documents timely remitted by Proposer or Respondent, in response to this solicitation.
e) "Proposer" or "Respondent." All contractors, consultants, organizations, firms or other entities submitting a response to this RFP.
f) The words "Scope of Services" or "Scope of Work" to mean section 3.0 of this solicitation, which details the work to be performed by the contractor or consultant.
g) The word "Solicitation" to mean this Request for Proposal (RFP) document, and all associated addenda and attachments.
h) The words Subcontractor" or "Sub-consultant" to mean any person, firm, entity or organization, other than the employees of the contractor, who contracts with the contractor to furnish labor, or labor and material, in connection with the services to the city, whether directly or indirectly, on behalf of the contractor.

5.2 CITY OVERVIEW

North Miami, Florida (pop. 60, 000) is a diverse community, ideally located midway between Miami and Fort Lauderdale and encompasses approximately 9.5 square miles. As the fifth largest city of Miami-Dade County, North Miami is committed to growth in its business community, while also focusing on issues such as education, the arts, leisure activities and sustainability to provide a viable future for our residents and preserve the City's rich history since its incorporation in 1926.

The City currently has 550+ employees and provides a wide range of governmental services including public safety / police services, parks and recreation, public works, water and sewer, planning, building and zoning, code enforcement, and community development to its citizens.

The City is a very large consumer of goods and services and the purchasing decisions of our employees and contractors can positively or negatively affect the environment. By including environmental considerations in our procurement decisions, along with our traditional concerns with price, performance and availability, we will remain fiscally responsible while promoting practices that improve public health and safety, reduce pollution, and conserve natural resources.

5.3 INVITATION

This invitation is extended to firms and organizations that can provide the requirement(s) specified herein. The requirements presented in this solicitation represent the City's anticipated needs.

5.4 PUBLIC ENTITY CRIMES AFFIDAVIT

The *Public Entity Crime Affidavit*, **(Form "A-1")** attached to this solicitation, includes documentation that shall be executed by an individual authorized to bind the Respondent. If the *Public Entity Crime Affidavit* is not submitted as part of the Respondent's Proposal package, is altered in any manner or is not fully completed, the Respondent shall be deemed non-responsive to the solicitation requirements.

5.5 PUBLIC ENTITY CRIME/ DISCRIMANATORY VENDOR LIST

Any Respondent, or any of its suppliers, subcontractors, or consultants who shall perform work which is intended to benefit the City, shall not be a convicted vendor or included on the discriminatory vendor list. If the Respondent or any affiliate of the Respondent has been convicted of a public entity crime or has been placed on the discriminatory vendor list, a period longer than 36 months must have

passed since that person was placed on the convicted vendor or discriminatory vendor list. The Respondent further understands and accepts that any contract issued as a result of this solicitation shall be either voidable or subject to immediate termination by the City. The City in the event in such termination, shall not incur any liability to the Respondent for any work or materials furnished.

5.6 LOBBYING

All Respondents, their agents and proposed sub consultants or subcontractors, are hereby placed on noticed that neither the City Council Members, any evaluation committee members, employees of the City or employees of any other project sponsoring agencies shall be lobbied either individually or collectively regarding this solicitation. Respondents, their agents and proposed sub-consultants or subcontractors are hereby placed on notice that they are prohibited from contacting any of these individuals for any purpose relating to the solicitation (e.g., general information, meetings of introduction, meals, etc.). Any Proposal submitted by a Respondent, its agents and potential sub consultants or subcontractors who violate these guidelines will not be considered for review. The Procurement Director or Contract Specialist (identified on the cover page of this solicitation) shall be the only point of contact for questions and/or clarifications concerning the solicitation, the selection process and the negotiation and award procedures.

5.7 SUSPENSION OF CONTRACTORS FOR MATERIAL BREACH OF CITY CONTRACTS

Pursuant to Sec 7-160 (a), (b) & (c) upon recommendation by the Director of Procurement, may temporarily or permanently suspend contractors from doing business with the city whenever a contractor materially breaches its contract with the City. Any Proposal submitted by a Respondent, its proposed subcontractors or sub consultants who are included on the City's Suspension List shall not be considered for review.

In addition, the principles of any Respondents or its proposed subcontractors or sub consultants shall not attempt to do business with the City under a different name or form a new legal entity in order to do business with the City while the principals of the Respondent or its proposed subcontractors or sub consultants remain on the Suspension List. In the event there is any intentional misrepresentation, the Respondent further understands and accepts that any contract issued as a result of this solicitation shall be subject to immediate termination for default and suspension procedures by the City. The City, in the event of such termination, shall not incur any liability to the Respondent for any work or material furnished.

5.8 POINTS OF CONTACT TIMETABLE FOR INQUIRES

Respondents shall contact the contract specialist, identified on the cover page of this solicitation, for all inquiries relating to this solicitation. All Respondents' technical inquires shall be confirmed in writing either through the mail, via facsimile transmission or electronic mail.

Technical questions will not be entertained beyond the cut-off date indicated on the cover page so that answers to substantive questions, in the form of written addenda, can be posted on the City's web site (www.northmiamifl.gov) and Demand Star by Onvia at www.demandstar.com or calling toll free 1-800-711-1712 and requesting the corresponding documents number.

5.9 ORAL REPRESENTATION

No oral representation made by the City staff shall be binding. The contents of this RFP and any subsequent addenda issued by the City shall govern all aspects of this solicitation.

5.10 ADDENDA

If any solicitation revisions become necessary (other than changes to the deadline for response submission), the City will post written addenda on the City web's site at (www.northmiamifl.gov) and on Demand Star by Onvia at www.demandstar.com or calling toll free 1-800-711-1712 and requesting the corresponding document number at least seven (7) calendar days before the date scheduled for opening the responses. The City may revise the deadline for response submission at any time prior to the date and time scheduled for opening the responses. **It is the responsibility of all Respondents to ascertain whether any**

addenda have been issued before the solicitation deadline by either calling or checking the City's web site (www.northmiamifl.gov) and Demand Star and by Onvia at www.demandstar.com or calling toll free 1-800-711-1712 and requesting the corresponding document number. All addenda placed on the Demand Star can be down loaded.

5.11 CANCELLATION OF THE SOLICITATION

The City reserves the right to cancel this solicitation and/or re-advertise and re-solicit the requirements at any time when determined to be in the best interest of the city.

5.12 PROTEST

If a potential Respondent protests any provisions of the Request for Proposal documents, a written protest must be filed with the City Clerk within five (5) business days (excluding weekends and City observed holidays) prior to date set for opening of the Proposals. A written protest is considered filed when received by the City Clerk.

Any Proposer who files a formal written protest pursuant to Section 7-158 City Code, shall post with the city at the time of filing the formal written protest with the city at the time of filing the formal written protest a filing fee in an amount equal to one percent (1%) of the amount of the bid or proposed contract, or one thousand dollars ($1,000), whichever is less. Failure to file a notice of protest within the time prescribed in Section 7-158, City Code, or failure to post the filing fee within the time allowed, shall constitute a waiver of such Proposer's right to file a protest.

Notice of written protest along with the filing fee, shall be timely filed with the City Clerk of the City North Miami at 776 NE 125th Street, 1st Floor North Miami, FL 33161. The City will not accept receipt of any formal written protests filed at any location other than the City's Clerk's Office

5.13 CONTRACT

The selected Respondent understands that this solicitation or the response shall not constitute a contract with the City. No contract is binding or official until responses are reviewed and accepted by appointed City Staff, approved by the appropriate level of authority within the City and an official contract is duly executed by the parties. The selected Respondent shall be required to sign a contract which the city determines to be fair, competitive and reasonable.

5.14 DEVELOPMENT COSTS

Neither the City nor its representatives shall be liable for any expenses incurred in connection with the preparation, submission or presentation of a response to this solicitation. All information in the response shall be provided at no cost to the City.

5.15 TAX EXEMPT STATUS

The City is exempt from Florida Sales and Federal Excise taxes on direct purchase of tangible property.

5.16 RESPONSE SUBMISSION AND OPENING

All response shall be submitted in a sealed envelope by the deadline indicated on the cover page of this solicitation. The response shall identify the solicitation number and title specified on the cover page of this solicitation. Reference information shall also be marked on the outside of the sealed envelope, including the Respondent's return address. The City assumes no responsibility for responses not properly marked.

The City will not accept responses delivered after the established deadline. If the response is delivered after the established deadline, a Respondent shall be deemed non-responsive to the solicitation requirements.

Receipts of a response by any City office, receptionist or personal other than the Clerk's Office will not constitute "delivery" as required by this solicitation. The City will not accept or consider responses submitted via facsimile transmission. The public is welcome to attend the solicitation opening.

5.17 ASSIGNMENT OF RESPONSE

A Respondent shall not transfer or assign its response to a third party following submission of a Proposal to the City.

5.18 WITHDRAWL OF RESPONSE

Respondents shall withdraw their submitted Proposal by notifying the City either in writing or in person through an authorized representative at any time prior to the submission deadline. Individuals making the withdrawal shall provide evidence of serving as an authorized representative of the Respondent. Responses, once received, become the property of the City, and will not be returned to Respondents even when they are withdrawn from consideration.

Responses, once opened, shall not be withdrawn or modified except to the extent agreed to by the City during subsequent contract negotiation.

5.19 PUBLIC RECORDS AND EXEMPTIONS

Upon receipt, responses become "public records" and shall be subject to public disclosure consistent with Chapter 119, Florida Statutes. Respondents shall invoke the exemptions to disclosure provided by law, in the response to the solicitation, by providing the specific statutory authority for the claimed exemption, identifying the data or other materials to be protected, and stating the reasons why such exclusion from public disclosure is necessary. Responses will be made available for public inspection at the time the City posts notice of its decision or intended decision concerning contract awards, or ten (10) days after the response opening, whichever is earlier.

5.20 REJECTION OF RESPONSES

Pursuant to Section 7-136 of the City Ordinance the City reserves the right to reject any and all Proposals for reasons including, but not limited to, the following: (1) when such rejection is in the interests of the City; (2) if such Proposal is deemed non-responsive; (3) if the Respondent is deemed non-responsible; or (4) if the Proposal contains any materials irregularities. Minor irregularities contained in response will be waived by the City. A minor irregularity is a variation from the solicitation that does not affect the price of the contract nor does it give a Respondent an advantage or benefit not enjoyed by other Respondents and does not adversely impact the City.

5.21 WRITTEN PROPOSAL EVALUATION / ORAL PRESENTATIONS

The selection committee members will independently score the Proposal on the basis of their qualifications and technical merit in accordance with the evaluation criteria included in Part 4 of this solicitation. Following the submission and evaluation of the written Proposals, the City may request the highest ranked Respondents to provide oral presentation explaining and/or demonstrating each Proposal. All oral presentation will be scheduled and publicly noticed by the City. Following the completion of oral presentations, the selection committee members will score each presentation. Final ranking after oral presentations will be based on the summary of raw scores from the oral discussions for each Respondent.

5.22 REVIEW OF PROPOSAL FOR RESPONSIVE

Each Proposal will be reviewed to determine if the Proposal is responsive to the submission requirements outlined in the RFP. A responsive Proposal is one which follows the requirements of the RFP, includes all documentation, is of timely submission, and has the appropriate signature as required on each document. Failure to comply with these requirements may result in a Proposal being deemed non-responsive.

5.23 CITY COUNCIL REVIEW

The Purchasing Director will report the result of this RFP to the City Council for final approval in accordance with the City's Procurement Ordinance to enter into contract Negotiation. The City Council reserves the right to reject all Proposals.

5.24 CONTRACT AWARD

The City anticipates the award of one contract, but reserves the right not to make any award whatsoever, if determined to be in the interest of the City.

Prior to contract award, the Respondent(s) shall submit documentation reflecting any required insurance coverage. The contract number shall be included on the insurance documentation submitted to the City at the time of award execution and for all subsequent updates to the insurance coverage throughout the contract period. Failure to execute the contract and/or to provide evidence of any required insurance

coverage shall be just cause for the termination of the award.

5.25 CONE OF SILENCE

This RFP is issued pursuant to the City of North Miami Ordinance Section 7-193 which prohibits certain types of communications: (a) A Cone of Silence shall be imposed upon each RFP, RFP and IFB after the advertisement of said RFP, RFP or IFB. At the time of imposition of the cone of silence, the director of the purchasing department or designee shall provide for public notice of the cone of silence. The director of the purchasing department shall issue a written notice thereof to the affected departments, file a copy of such a notice with the city clerk, with the copy thereof to each city council member, and shall include in any public solicitation for supplies or services a statement disclosing the requirements of this ordinance. Notwithstanding any other provision of this section, the imposition of a cone of silence on a particular RFP, RFP or IFB shall not preclude Purchasing staff from obtaining industry comment or performing market research provided all communication related thereto with a potential offeror, service provider, bidder, lobbyist, or consultant are in writing or are made at a duly noticed public meeting.

The ordinance does not apply to oral communications at pre-proposal conference, oral presentations before selection committees, contract negotiations, public presentations made to the City Council during any duly noticed public meeting or communications in writing at any time with any City Council unless specifically prohibited by the applicable RFP, RFP, or bid documents. A copy of all written communications must be filed with the City Clerk.

5.26 RESPONDENT'S DISCLOSURE OF SUBCONTRACTORS AND SUPPLIERS

This RFP shall require that the Respondent submits with its Proposal a listing of all first-tier subcontractors or sub consultants who will perform any part of the contract work and all suppliers who will supply materials for the contract work direct to the selected Respondent. **Failure to comply with this requirement shall render the Proposal non-responsive.** In addition, the selected Respondent shall not change or substitute subcontractors or suppliers from those listed in the Proposal except upon written approval of the City **(See "Form A-6").**

5.27 BUSINESS ENTITY REGISTRATION

The City of North Miami requires business entities to complete registration application before doing business with the City. Respondents need not register with the City to Present a Proposal; however, the selected Respondent(s) must register prior to award of a contract as failure to register may result in the rejection of the Proposal. To register, contact the Purchasing Department at (305) 895-9886 or you may download the application *(revised 7/09)* from our website at www.northmiamifl.gov it is the responsibility of the business entity to update and renew its application concerning any changes such as new address, telephone number, commodities, etc. during the performance of any agreement obtained as a result of this RFP.

5.28 EXCEPTION TO THE RFP

Respondents may take exceptions to any of the terms of this RFP unless the RFP specifically states where exceptions may not be taken. Should a Respondent take exception where none is permitted, the Proposal will be rejected as non-responsive. All exceptions taken must indicate clearly what alternative is being offered to allow the City a meaningful opportunity to evaluate and rank Proposals, and the cost implications of the exception (if any). Where exceptions are taken, the City shall determine the acceptability of the proposed exceptions. The City, after completing evaluations, may accept or reject the exceptions. Where exceptions are rejected, the City may insist that the Respondent furnish the services or goods described herein or negotiate an acceptable alternative.

All exceptions shall be referenced by utilizing the corresponding section, paragraph and page number in this RFP. However, the City is under no obligation to accept any exceptions. If no exception is stated, the City will assume that the Respondent will accept all terms and conditions.

5.29 PROPRIETARY/ CONFIDENTIAL INFORMATION

Respondents are hereby notified that all information submitted as part of, or in support of, Proposals will be available for public inspection after opening of Proposals, in compliances with Chapter 119, Florida Statutes, popularly known as the "Public Records Law."

5.30 LOCAL PREFERENCE / 10% TOTAL WORKFORCE CONSISTING OF NORTH MIAMI RESIDENTS / SUBCONTRACT WITH LOCAL VENDORS

The evaluation of competitive solicitations is subject to Section 7-151 of the City Code which, except where contrary to federal and state law, or any other funding source requirements, provides that preference be given to local businesses. To satisfy this requirement, the vendor shall affirm in writing its compliance with either of the following objective criteria as of the bid or Proposal submission date stated in the solicitation. A local business shall be defined as:

b) A business that has a valid local business tax receipt, issued by City of North Miami at least one year prior to bid or Proposal submission, that is appropriate for the goods, services or construction to be purchased; or

c) A business that has a physical business address located within the limits of the City of North Miami from which the vendor operates or performs business. Post Office Boxes are not verifiable and shall not be used for the purpose of establishing said physical address; or A business has at least ten percent (10%) of its total workforce residing in the city prior to the city's issuance of the solicitation for supplies or services; or

d) The local preference may be applied to firms that subcontract at least ten percent (10%) of the contractual amount of a City project to subcontractor who is physically located within the City of North Miami **(Must complete Form A-3a & A-3b)**

The preference is used to evaluate the submittals received from Respondents are assigned point totals, a preference of ten (10) percent of the total evaluation point, or ten (10) percent of the total price, shall be given to the local business. **(See Form A-3)**

5.31 RULES, REGULATED AND LICENSING REQUIREMENTS

The Respondent shall comply with all laws; ordinances and regulations applicable to the services contemplated herein, especially those applicable to conflict of interest and collusion. Respondent are presumed to be familiar with all Federal, State and Local laws, ordinances, codes, rules and regulations that may in any way affect the goods or services offered.

5.32 COMMUNITY BENEFITS PLAN

The Successful Proposer will be required to submit, a Community Benefits Plan for approval by the City Manager. The Community Benefit plan shall be exclusive of the City of North Miami's Local Preference requirement, under Section 7-151 of the City Code.

The Successful Proposer will be required to document their experience and track record in delivering to a municipality, county or other local government agency a Community Benefits Plan. The Successful Proposer shall be required to demonstrate and provide to the City a proposed Community Benefit Plan which has identifiable and observable benefit to the community within the City. Proposers are encouraged to be creative in the development of a Community Benefit Plan and the types of benefits their plan is designed to provide. The City Manager, as the City's Chief Executive Officer, shall approve the final Community Benefits Plan proposed by the successful Proposer, as a precondition to the execution of any agreement. The Successful Proposer's Community Benefits Plan shall be incorporated into and shall become a part of the agreement entered into between the City and the selected Proposer.

END OF SECTION 5

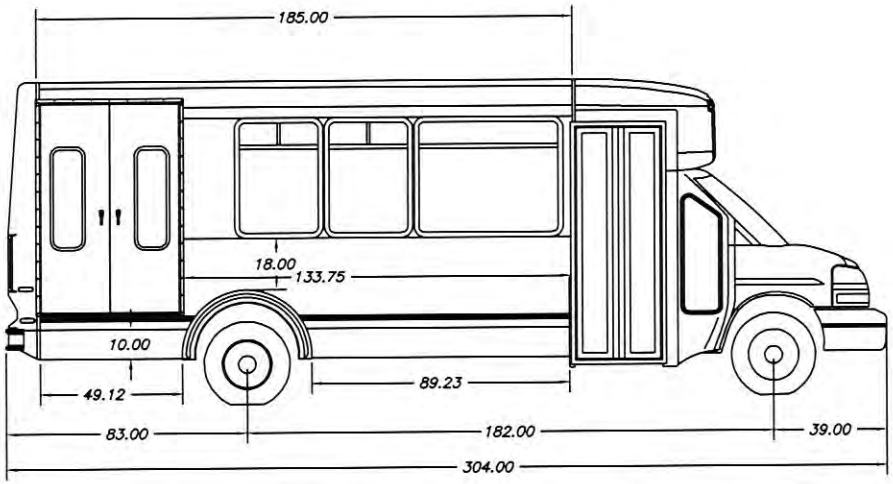

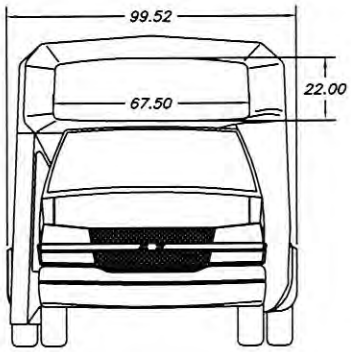

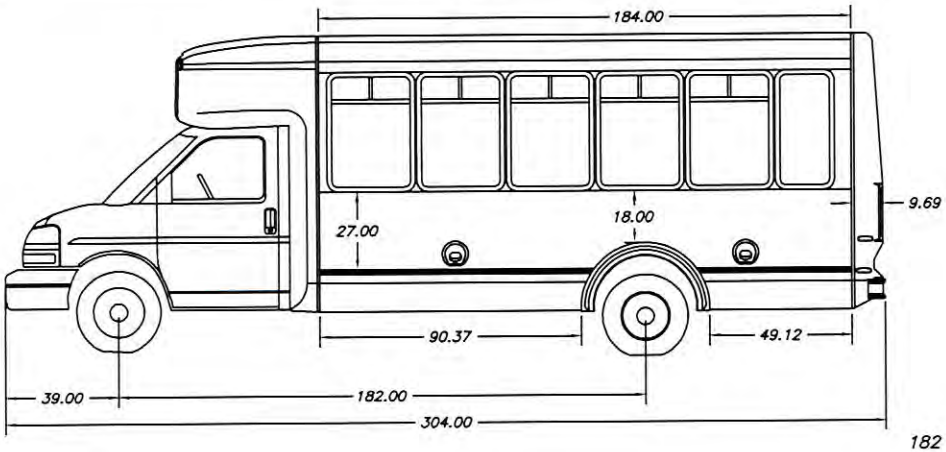

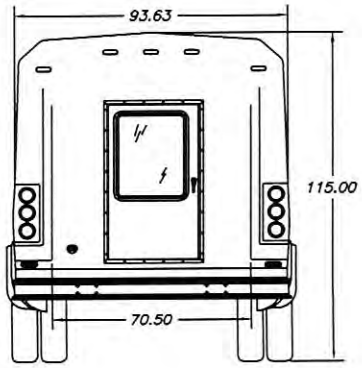

182 WHEELBASE 29.50 x 41.50 WINDOWS SHOWN 30" ENTRY DOOR REAR LIFT

NOTE: OVERALL HEIGHT MAY VARY DUE TO SPRING PKG OPTIONS AND DOES NOT REFLECT ROOF HATCH.

ElDorado National
— a THOR company —
1655 WALL STREET
SALINA, KS. 67401

NEXT ASSEMBLY: NONE	DRAWING INFORMATION						
SUPERCEDES: NONE	DRAWN: MILLER	CKD:					
DO NOT SCALE DRAWING	DATE:	SIZE: A					
MARK PART NUMBER AND REVISION ON ALL PARTS	SCALE: 1/64	WGT:					
THIS DRAWING IS THE PROPERTY OF ELDORADO NATIONAL COMPANY, A THOR INDUSTRIES COMPANY AND IS NOT TO BE DUPLICATED OR USED IN ANY WAY DETRIMENTAL TO THEIR BEST INTEREST. REV. 02/02	TOLERANCE UNLESS SPECIFIED						
	FRACTIONS ± 1/16		–	JPM		RELEASE TO PRODUCTION	
	DECIMALS .00 ± .06		REV.	BY	DATE	DESCRIPTION	RELEASE #
	ANGLES + 1 DEG.						

TITLE:
ELEVATION VIEWS, CHEVY AEROTECH 240
30" ENTRY DOOR / WC DOOR (REAR)

MATERIAL SPEC:

PART NUMBER
ELEV2499-2933

PAGE
1 OF 1

Interlocal Agreement Between
Miami-Dade County and the City of North Miami
for the Provision of Public Transportation Services

This is an Interlocal Agreement, made and entered into by and between Miami-Dade County, a political subdivision of the State of Florida, hereinafter referred to as "the County" and the City of North Miami, a municipal corporation of the State of Florida, hereinafter referred to as "the City".

WITNESSETH:

WHEREAS, residents of the City of North Miami wish to enhance their transit mobility, and the operation of a municipal circulator provides the opportunity of transit to match the travel needs of the residents of North Miami; and,

WHEREAS, the provision of regularly scheduled transit circulator services can help decrease the need for specialized transportation services by the County; and

WHEREAS, the provision of regularly scheduled transit circulator service will connect with existing Miami-Dade Transit (MDT) services and help increase the use of services provided by MDT; and

WHEREAS, the City has sponsored and is willing to provide an alternative form of supplemental public transit throughout the City and has secured and obligated the necessary funds to provide;

NOW THEREFORE,

IN CONSIDERATION of the mutual terms, conditions, promises, covenants and payments hereinafter set forth, the County and the City agree as follows:

ARTICLE 1

DEFINITIONS

1.1 "ADA" shall mean the Americans with Disabilities Act of 1990, as amended

1.2 "Contractor" shall mean any entity, public or private providing public circulator services as described in this Agreement under contract to the City.

1.3 "Circulator" shall mean fixed route or semi-fixed route public transportation circulator services where at least seventy (70%) percent of the route is within the City and said circulator service is operated by the City, directly or by contract, pursuant to this Agreement and Chapter 31 of the code of Miami-Dade County.

1.4 "The County" shall include Miami-Dade County, the Miami-Dade Transit Miami-Dade. Consumer Services Department, and authorized representatives thereof.

1.5 "The City" shall mean City of North Miami and authorized representatives there.

1.6 "FDOT" shall mean the Florida Department of Transportation and authorized.

1.7 "MDT" shall mean the Miami-Dade Transit and authorized representatives thereof.

1.8 "USDOT" shall refer to the U.S. Department of Transportation, its rules and regulations and representatives thereof.

1.9 "FTA" shall mean the Federal Transit Administration, its rules and regulations, representatives thereof.

1.10 "RER" shall mean the Regulatory and Economic Resources Department of Miami-Dade County

1.11 "BADFHT" shall refer to the Business Affairs Division For-Hire Transportation Section section of RER.

1.12 "Federal Reporting Requirements" shall mean those requirements referenced in 49 CFR Section 5335(a), as may be amended from time to time, and found in the National Transit Database Reporting Manual published by the FTA.

1.13 "Fares" for the circulator service shall mean individual transportation fees paid by public transit passengers in accordance with a schedule of fares adopted by County Ordinance.

1.14 "STS", Special Transportation Service, is the component of the conventional transit system designed to provide comparable circulator service to disabled individuals as mandated in the ADA.

ARTICLE 2

GENERAL REQUIREMENTS

2.1 Compliance with Applicable Laws and Regulations. The City and its contractors, if any, shall comply with all existing and future laws, statutes, ordinances, codes, rules, regulations and procedural requirements, whether federal, state, or local, which are applicable to or in any manner affect, the provision of City of North Miami Circulator Services. The City shall be responsible for ensuring compliance of its employees, contractors, agents, or assigns with all applicable county, state and federal requirements, including, but not limited to, all safety, mechanical, and vehicular standards mandated by MDT and RER. The City shall be responsible for obtaining copies of the appropriate laws, regulations, ordinances, and documents and complying therewith.

2.2 The County Regulatory Requirements. Prior to the commencement of the circulator service under this Agreement, the City and/or its contractors, if any, shall have current and valid certificates of transportation, permits, and chauffeur registrations as required by Chapter 31 of the Code of Miami-Dade County. The City and its contractors shall maintain such certificates, registrations and permits current during the Period of this Agreement. In no event shall the City or any of its contractors provide any transportation services contemplated by this Agreement until any and all County regulatory requirements are satisfied.

2.3 Vehicle Licensing. All vehicles utilized to provide transportation services shall at all times be properly licensed and permitted in accordance with applicable federal, state and county requirements. Vehicle operators shall comply with all safety, mechanical and vehicular standards mandated by any applicable county, state and federal requirements including, but not limited to, all safety, mechanical and vehicular standards mandated by MDT and RER.

2.4 Vehicle Standards. Vehicles shall comply with all of the Requirements contained in Chapter 30 and 31 of the Code of Miami-Dade County, pertinent state statutes and other directives as may be prescribed and required by RER or MDT. All vehicles utilized to provide transportation services authorized by this Agreement shall at all times display a current and valid county permit and shall comply with safety, mechanical and vehicular requirements mandated by applicable county, state or federal requirements, including ADA.

2.5 Chauffeur Requirements. Vehicle chauffeurs shall at all times have a current and valid county chauffeur's registration, vehicle chauffeurs shall also comply with any safety, mechanical and vehicle standards mandated by applicable county, state and federal requirements and as may be prescribed and required by RER or MDT.

2.6 Proof of Compliance Prior to Operation. The City and/or its contractors, if any shall provide the County with proof of compliance with licensure, insurance and any other requirements mandated by the Code of Miami-Dade County, state statute or federal law prior to commencement of the circulator service.

2.7 Purchase of Services/Sole Responsibility. The parties agree that this Agreement is a contract for the purchase of transportation services provided by the City for the benefit of citizens of City of North Miami and of the County. City employees, agents and contractors providing transportation services shall be considered to be, at all times, solely employees, agents and contractors of the City under its sole direction and not employees, agents or contractors of the County.

2.8 Compliance with ADA. The City's circulator services shall comply with all applicable requirements of the ADA. The City and the County recognize their joint obligation to provide STS in the area served by the City's Circulator service. In fulfillment of the City's obligation, the City hereby contracts with the County to provide STS service at no cost to the City. To the extent that any terms in the Agreement are in conflict with ADA, the requirements of the ADA shall control.

2.9 Compliance with Procurement Requirements. The City agrees to comply with applicable federal and state procurement requirements, as may be amended from time to time, when entering into contracts with third parties to fulfill the obligations under this Agreement.

2.10 County's Right to Submit Proposals and Bids. The County shall be given the opportunity to bid upon any Requests for Proposals, Requests for Qualifications, or Requests for bids which the City shall be considering, along with private contractors, for provision of services to be provided by the City pursuant to this Agreement.

2.11 Drug-free Workplace and Testing. In accordance with the Code of Miami-Dade County, the City shall certify that it will have dug-free workplace program. Further, the City shall require pre-employment drug testing and other periodic drug testing for all persons holding safety-sensitive positions, as defined by USDOT, related to transit operation. Effective upon execution of the Agreement, the City shall require that its employees or contractor if applicable, comply with all applicable requirements of the USDOT regulations for drug and alcohol testing. To the extent that any terms in this Agreement are inconsistent with the USDOT regulation, the requirements of the USDOT shall control.

2.12 City Representative. The City shall designate individual(s) to act as liaison to the County and notify the County thereof. The City shall promptly notify the County of any changes.

2.13 County Representative. The County shall designate individual(s) to act as liaison to the City and notify the City thereof. The County shall promptly notify the City of any changes.

2.14 Amendments or modifications. Unless provided otherwise elsewhere in this Agreement, amendments and modifications to this Agreement must be in writing and shall require the signatures of the County Manager and the Mayor, or their designees, subject to authorization by their respective Boards. Notwithstanding the foregoing, amendments to this Agreement regarding alignments, schedules, and fares, as described in Section 2-150 (c) of the Miami-Dade County Code, may be approved by the County Manager and the Mayor of the City of North Miami, or their designees.

ARTICLE 3

CITY OF NORTH MIAMI TRANSPORTATION SERVICES

3.1 Provision of City Circulator. The City shall provide public transportation service on one or more routes within the City of North Miami as contained in **Exhibit A** and schedules contained in Exhibit **B**, copies of which are attached. Changes to **Exhibit A or B** shall be consistent with Chapter 31 of the Code of Miami-Dade County and be effective only upon the written consent of the County Manager and the Mayor of the City of North Miami, or their designees.

3.2 Fares. The City shall operate the Circulator bus service charging in accordance with public transit fares established by the City, as may be modified from time to time. Initially no fare shall be collected until such a time as the City enacts legislation with an alternate fare structure.

If an alternate fare structure is enacted, the City shall accept MDT fare media including Easy Cards, Tickets, and identification entitling a passenger to ride the Circulator Bus without paying an additional fare. Qualified passengers shall pay no fare.

3.3 Connection and Coordination with County Bus Routes. The Circulator shall connect with regular County Metro routes at points where the routes, intersect, merge or diverge.

3.4 Operation of Routes Their Entirety. The City shall be responsible for ensuring that Circulator routes are operated in their entirety with no deviation from the approved routes and schedules unless otherwise authorized by the City.

3.5 Circulator Shown on County Bus Schedules. The County shall provide information on the City's Circulator service through MDT's routine and customary public information dissemination processes, including its transit information telephone service, and transit website.

3.6 Issuance of Circulator Schedules. The County shall make available to its Metrobus, Metrorail and Metromover passengers map and schedules provided by the City to MDT.

3.7 Planning and Scheduling of Circulator Routes. The County, through the MDT Director or his designee, may assist the City staff with technical support for planning and scheduling of City circulator services.

3.8 Use of Logo. The City may wish to design a logo uniquely identifying its circulator service. If they do so, such logo shall at all times be displayed on the exterior of all vehicles in operation pursuant to this Agreement. The County shall allow the display of the Circulator logo on the County's bus stop signs at all stops common to the City and where the County bus routes does not interfere with previously placed signage, and is done in coordination with MDT staff. The City shall be responsible for placing the logo on the pertinent signs.

3.9 Bus Stop Signs and Signposts. The City may provide, install and maintain bus stop signs and signposts at stops along the City's Circulator routes. In the event that the City, its contractor, licensee, permittee, or assignee installs sign facilities that can accommodate Metrobus bus stop information, the County may elect to utilize the City's sign facility to display Metrobus bus stop information. If such election is made, MDT shall provide to the City the materials to be displayed on the bus stop sign facility, in the size and format to be specified by the City and the City will remove the County's signs and return the signs to the County. The City shall be responsible for installing the Metrobus stop information in/on the bus stop sign facility.

3.10 Bus Passenger Shelters and Benches
The City shall, at its sole option, provide, install, and maintain bus shelters, benches and other bus stop furnishings, at those bus service stops along the City's route where the City, or its contractor, feels that there is a need for such furnishings. The City agrees that it will be the responsibility of the City to comply with all ADA standards regulations with regards to accessibility to and from bus passengers stops and bus shelters within the city.

3.11 Bus Stops and Bus Bays or Pull-outs. The City shall, at its sole option, provide, install, and maintain bus stop sites, including bus bays or pull-outs at Circulator stops along the City's circulator routes, provided that any proposed bus bays or pull-outs shall be first reviewed and approved by the County or State, as appropriate.

3.12 Non-Interference and Non-Disturbance. The County and the City hereby mutually agree not to interfere with or unreasonably impede the free flow of pedestrian movement or of each other's public transit vehicular traffic or passengers accessing or egressing Metrobus or North Miami Circulator in-service vehicles.

ARTICLE 4

RECORDS AND REPORTS

4.1 Reporting Requirements. The City shall collect or assure the collection of all information required for Federal and State reporting purposes, and shall provide collected and compiled information to the County no less often than quarterly. The City shall annually prepare and submit to the County a copy of said reports no later than ninety (90) days after the close of the County's fiscal year.

4.2 Additional Information. The City shall provide additional information about the City Circulator service operations as requested by the County within thirty (30) days, unless a different time period is agreed upon by the City and the County.

ARTICLE 5

INSURANCE

The parties hereto acknowledge the City is self-insured governmental entity subject to the limitations of Section 768.28, F.S. The City shall institute and maintain a fiscally sound and prudent risk management program with regard to its obligations under this Agreement in accordance with the provision of Section 768.28, F.S. The City shall collect and keep on file documentation of insurance of any and all private providers operating in the City of North Miami Circulator service routes. In the event that the City contracts with a private vendor for services, the City shall require contractor to meet the insurance requirements show in **Figure 3**, as minimum. The City shall further require the private operator to include the County as a named insured and shall provide the County with a copy of the insurance policy purchased by any contractor prior to the provision of Circulator service operations.

Figure 3

Insurance Check List

1. Worker's Compensation and Employer's Liability per the statutory limits of the state of Florida.

2. Commercial General liability (occurrence form), limits of liability $1,000,000 per occurrence for bodily injury property damage to include premises/ operations; products and completed operations; independent Contractors; broad form property damage endorsement and contractual indemnity (hold harmless endorsement exactly as written in "insurance requirements" of specifications).

3. Automobile Liability- $ 1,000,000 each occurrence owned/non-owned/ hired automobiles included.

4. Excess Liability- $_____.00 per occurrence to follow the primary coverage.

5. The City must be named as an additional insured on the liability policies; and it must be stated on the certificate.

6. Other Insurance as indicated:

_____Builders Risk completed value	$_____
_____Liquor liability	$_____
_____Fire legal liability	$_____
_____Protection and indemnity	$_____
_____Employee dishonesty bond	$_____
_____Other blanket fidelity bond	$_____

7. Thirty days written cancellation notice required

8. Best's guide rating B+: VI or better, latest edition.

9. The certificate must state the bid number and title.

ARTICLE 6

INDEMNIFICATION

6.1 The City shall, to the extent permitted by law at all time hereafter, indemnify and hold harmless the County, and its officers, agents, employees and instrumentalities from any and all liability, claims, losses and causes of action, including attorneys' fees an and costs of defense which the County or its officers, employees, agents or instrumentalities may incur as a result of claims, demands suits, causes of actions or proceedings of any kinds or nature arising out of, or relating to or resulting from the negligence of the City and/or its officers, employees, agents or instrumentalities, during the term of this Agreement. The City shall pay all claims and losses in connections therewith, and shall investigate and defend all claims, suits or actions of any kind or nature in the name of the County, where applicable, including appellate proceedings, and shall pay all costs, judgments and reasonable attorneys' fees which may issue thereon. The City expressly understands and agrees that any insurance protection required by this Agreement or otherwise provided by the City shall in no way limit the responsibility to indemnify, keep and save harmless and defend the County or its officers, employees, agents or instrumentalities as herein provided. Nothing herein shall be deemed to indemnify the County from any liability or claim arising out of the negligent performance or failure of performance of the County, its officers, employees, agents or instrumentalities or any other related third party. This paragraph is subject to the limitations of Section 768.28, F.S.

6.2 The County shall, to the extent permitted by law at all times hereafter, indemnify and hold harmless the City, and its officers, agents, employees and instrumentalities from any and all liability, claims, losses, and causes of action, including attorneys' fees and costs of defense which the City or its officers, employees, agents or instrumentalities may incur as a result of claims, demands, suits, causes, of actions or proceedings of any kind or nature arising out of, or relating to or resulting from the negligence of the County and/or its officers, employees, agents or instrumentalities, during the term of this agreement. The County shall pay all claims and losses in connections therewith, and shall investigate and defend all claims, suits or actions of any kind or nature in the name of the City, where applicable, including appellate proceedings, and shall pay all costs, judgments and reasonable attorneys fees which may issue thereon. The County expressly understands and agrees that any insurance protection required by this Agreement or otherwise provided by the County shall in no way limit the responsibility to indemnify, keep and save harmless and defend the City or its officers, employees, agents or instrumentalities as herein provided. Nothing herein shall be deemed to indemnify the City from any liability or claim arising out of the negligent performance or failure of performance of the City, its officers, employees, agents or instrumentalities or any other related third party. This paragraph is subject to the limitations of Section 768.28, F.S.

6.3 In the event the City contracts for transportation services authorized by this Agreement, the contractor shall, in its contract shall, in its contract with the City, be required to indemnify and hold harmless the County, and its officers, agents employees and instrumentalities from any and all liability, claims, liabilities, losses, and causes of action, including reasonable attorneys' fees and cost of defense which the County, the City or their officers, employees, agents and instrumentalities may incur as a result of claims, demands, suits, causes of actions or proceedings of any kind or nature arising out of, or relating to or resulting from the provision of transportation services by the contractor and/or its officers, employees, agents or independent contractors. The contractor shall be required to pay all claims and losses in connection therewith, and shall investigate and defend all claims, suits or actions of any kind or nature in the name of the County and City, where applicable, including appellate proceedings, and shall pay all costs, judgments and attorneys' fee which may issue thereon. The City shall require that the contract between and City and the contractor include a provision which states that the contractor expressly understands and agrees that any insurance protection required by this agreement or otherwise provided by the contractor shall in no way limit the responsibility to indemnify, keep and save harmless and defend the County and the City or their officers, employees, agents or instrumentalities as herein provided. Nothing herein shall be deemed to indemnify the County and the City from any liability or claim arising out of the negligent performance of the County and the City, their officers, employees, agents or instrumentalities or any other related third party.

ARTICLE 7

FINANCIAL ASSISTANCE

7.1 Grant Matching Funds. The City shall, at its sole option, provide grant-matching funds for state and/or federal grants for capital or operating funds to be used for the Transportation Services. The County, upon agreement with the City, may, but shall not be required to, provide all or part of cash or other types of matches required for state and federal grants which may be received by the City for the Circulator service, or for expansion of the Circulator service, in future years.

7.2 City's Share of supplemental Federal Funding. Beginning with the first year in which the circulator service's operating statistics are reflected in the National Transit Database, where those operating statistics result in new or supplemental funds are solely attributable to the Circulator service's properly reported operations, the County agrees to pay the City its attributable share of federal formula funds received from USDOT no less than sixty(60) days after funding is received from the federal government, less any direct grants received by the City from the County for the Circulator, provided that the funds remitted to the City herein shall be used for the expansion, enhancement or maintenance of the Circulator service program.

As used herein, the City's attributable share shall be one half of the amount equivalent to those Supplemental Urbanized Area Formula Funds, as described in 49 U.S.C, Section 5307, as may be amended from time to time, that the County received as a direct result of Circulator serve operations provided by the City pursuant to this Agreement and as included in the National Transit Database. Said attributable share shall be calculated utilizing the following formula:

Multiply the City's properly reported annualized Bus Revenue Vehicle Miles statistic that was used in the apportioned federal programs for a fiscal year "Unit Value for Bus Vehicle Miles for Urbanized Areas over 1,000,000" as reported in the table of Unit Values for Formula Grant Apportionments, published annually in the Federal Register; and then multiply that amount by 0.5.

NOTE: Historically, apportioned funds are allocated to the County two (2) years after Bus Revenue Vehicle Miles are reported to federal government.

7.3 City's Share of Supplemental State Funding. In the event that the Circulator operations contribute to an increase in the County's State transportation funding, beginning with the first year in which service is reflected in State's reporting system, the County agrees to pay the City its attributable share (one half of the supplemental funding), as defined in paragraph 7.2 above, of new or supplemental state Transportation Block Grant funding received by the County from FDOT no less than sixty (60) days after funding is received from the State less any direct grants received by the City from the Count for the Circulator. The State funding formula can be found at Section 341.052(6), F.S.

7.4 Comparable Agreements. In the event that the County enters into an Interlocal Agreement with any other municipality for Circulator services which are comparable to the services provided herein, County agrees to amend this Agreement, if requested by the City, to provide substantially equivalent favorable terms to the City as those provided in such other County/ Municipal Interlocal Agreements.

ARTICLE 8

TERMS, MODIFICATIONS AND MISCELLANEOUS PROVISIONS

8.1 Terms of Agreement. This Agreement shall commence upon approval of the board of County Commissioners and the Council of City of North Miami and the execution by the County Manager and authorized Mayor and shall remain in force for five years thereafter. This Agreement is subject to two five-year automatic renewals under the same contract terms and conditions, all parties have the right to terminate (see 8.4 and 8.5).

8.2 Renegotiation or Modification. Any substantive changes in the level of service to be provided by the City as set forth herein shall only be implemented after the County and the City have entered into a written agreement describing the changed services and the provisions of the County Code have been exercised.

8.3 Title VI and VII Civil Rights Act of 1964. The City and its Contractors shall not discriminate against any person because of race, color, sex, religious background, ancestry or national origin in the performance of the Agreement.

8.4 Termination for Cause. This agreement may be terminated for cause by either party upon no less than thirty (30) days written notice to the other party, except when Circulator operations are in violation of health and/or safety-related provisions of state statutes or the Code of Miami-Dade County, in which case termination shall be determined by the County Manager. Said notice shall be delivered by verified facsimile transmission or certified mail, return receipt requested. The noticed party shall have the opportunity to cure any stated cause for termination within a reasonable notice period, in which case the termination party may cancel the termination notice using the same means by which the notice of termination delivered.

8.5 Termination without Cause. The County or the City may terminate this Agreement without cause upon no less than sixty (60) days written notice to the other party. If the County or the City terminates this Agreement with or without cause, the City agrees to reimburse the County on a prorated basis for financial assistance it has received for the year.

8.6 Notices. All notices and other communications required to be remitted pursuant to this Agreement to either party hereto shall be in writing and shall be delivered by verified facsimile transmission or certified mail, return receipt requested, to the parties at the address indicated below:

FOR MIAMI- DADE COUNTY:

Miami-Dade Transit
701 NW 1st Court
Miami, Florida 33136
Attention: Director, Miami-Dade Transit

FOR CITY OF NORTH MIAMI
City of North Miami
Stephen E. Johnson - City Manager
776 N.E. 125th Street, 4th Floor
North Miami, FL 33161

Attention: Stephen E. Johnson, City Manager

8.7 Complete and Binding Agreement. This writing embodies the full and complete agreement of the parties. No other terms, conditions or modifications shall be binding upon the parties unless in writing and signed by the parties.

8.8 Execution. This document shall be executed in five (5) counterparts, each of which shall be deemed an original.

8.9 Governing Law. This Agreement shall be construed in accordance with the laws of the State of Florida.

IN WITNESS WHEREOF, the parties have caused this Agreement to be executed by their respective and duly authorized officers the day and year first above written.

ATTEST:

By: Jacque Vieira
Deputy City Clerk

CITY OF NORTH MIAMI
A Municipal Corporation of
the State of Florida

By: 9/17/12
(Date)

Stephen E. Johnson
City of North Miami, City Manager

ATTEST:

HARVEY RUVIN, CLERK

By:

DEPUTY CLERK

By Its Board of County
Commissioners

By: (Date)

Carlos A. Gimenez
Miami-Dade County Mayor

Approved by County Attorney as
to form and legal sufficiency